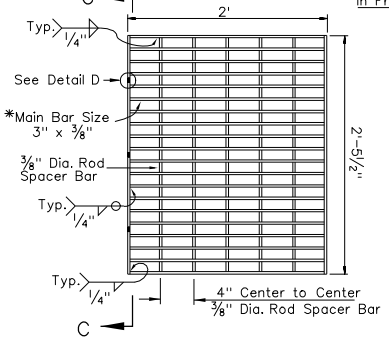

GRATE DETAIL

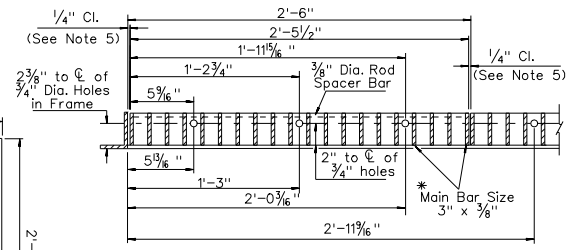

SECTION C-C
GRATE HOLE DETAIL

* 20 Bars Equally Spaced 1 1/2" on Center

QUANTITIES		
CONCRETE	REINFORCING STEEL	STRUCTURAL STEEL GRATE
0.78 CU. YD.	52 LBS.	456 LBS.
For Information Only Structural Steel Grate Includes Frame, Welded Angle, Grate & Spacer Bars.		

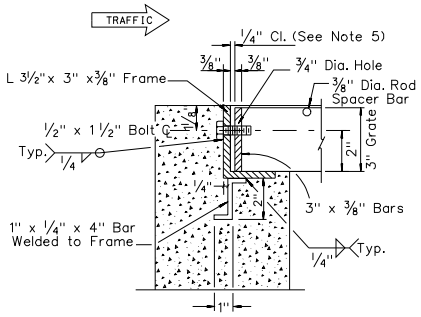

DETAIL D
GRATE HOLD-DOWN BOLT
INSTALL ONLY ON APPROACH SIDE OF GRATE & FRAME

NOTES:

1. ALL CONCRETE SHALL BE CLASS A OR AA.
2. REINFORCING BARS SHALL BE NO. 4 BARS WITH MAXIMUM SPACING AT 18" CENTERS. BARS TO BE EMBEDDED A MINIMUM OF 2" AND BAR ENDS MUST CLEAR SURFACE BY 1 1/2".
3. ALL EXPOSED CONCRETE EDGES SHALL BE CHAMFERED 1".
4. GRATE AND FRAME ANGLE TO BE WELDED AT ALL CONTACT POINTS.
5. 1/4" MAXIMUM CLEARANCE BETWEEN GRATE & FRAME ON EACH SIDE.
6. SLOPE CATCH BASIN FLOORS 10:1 FROM ALL DIRECTIONS TOWARD OUTLET PIPE. IF BASIN IS USED AS A JUNCTION SHAPE FLOWLINE(S) TO OUTLET PIPE, AND PROVIDE A 10:1 SLOPE TO FLOWLINE(S).
7. 12" DOWN DRAIN PIPE SHOWN, CAN BE UPSIZED TO 15" OR 18" WITH 3" OR 6" INCREASE IN THE BASIN DEPTH RESPECTIVELY. DOWN DRAIN PIPE TO BE CMP OR HDPE OR AS SPECIFIED.
8. IF OPTIONAL DRAIN IS INSTALLED, ADJUST REBAR TO ACCOMIDATE DRAIN.
9. RIPRAP CAN BE INCREASED TO CLASS 300 WITH A 6" INCREASE IN RIPRAP THICKNESS.

DESIGN NOTES:

D1. ADDITIONAL PIPE/DRAIN PENETRATIONS FOR SLOTTED DRAIN, TRENCH DRAIN, OR PIPES MAY BE PLACED IN ANY WALL.

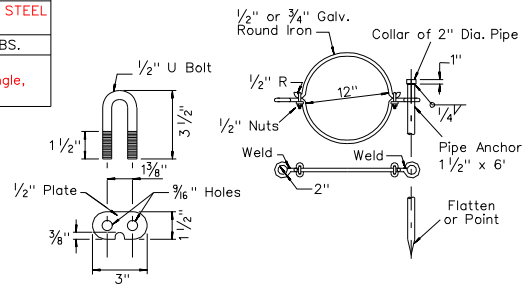

ANCHOR ASSEMBLY DETAIL

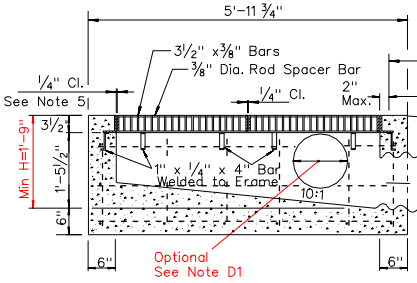

SECTION A-A

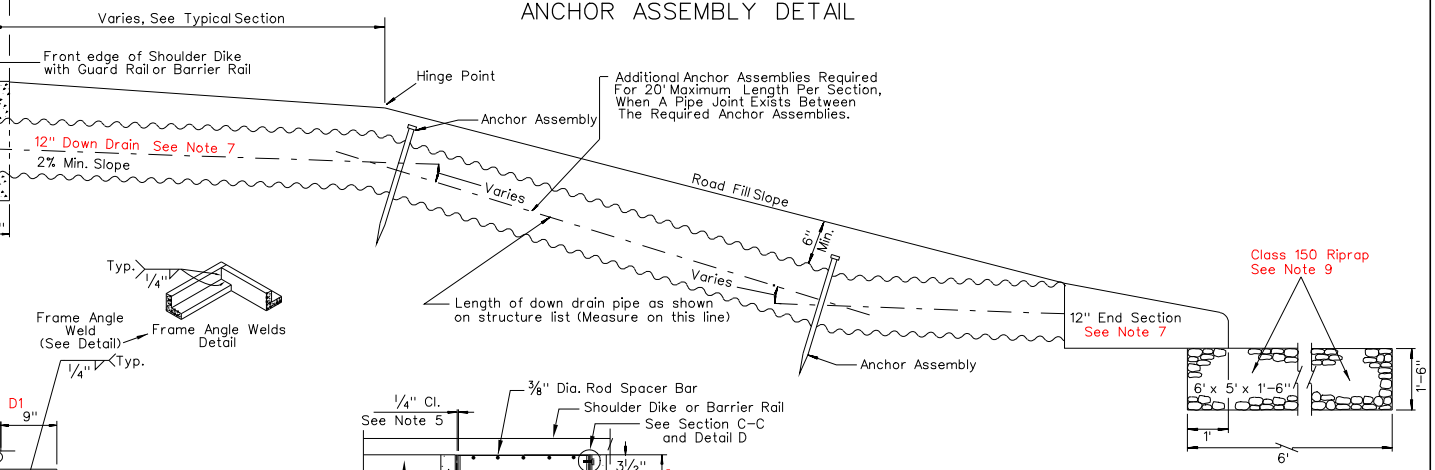

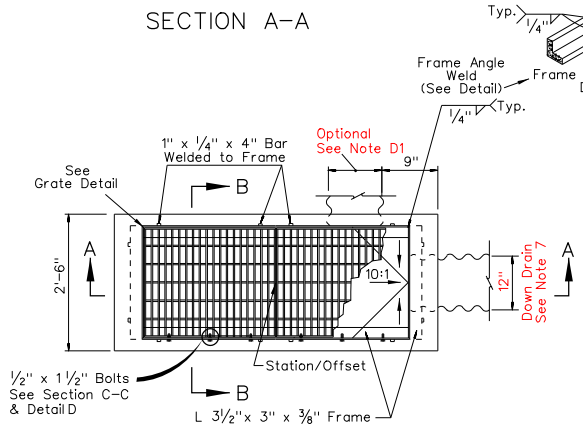

PLAN

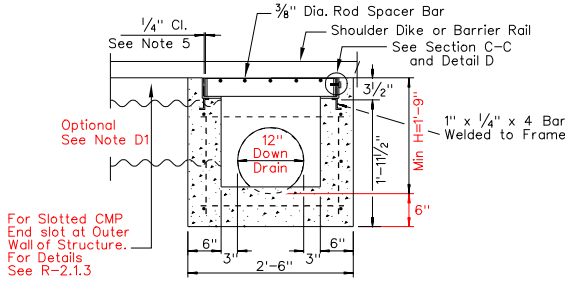

SECTION B-B

NEVADA DEPARTMENT OF TRANSPORTATION

EMBANKMENT PROTECTOR
(TYPE 5-2G)

Signed Original On File	R-3.1.3	(608)
CHIEF HYDRAULICS ENGINEER	ADOPTED 5/79	REVISION 5/09