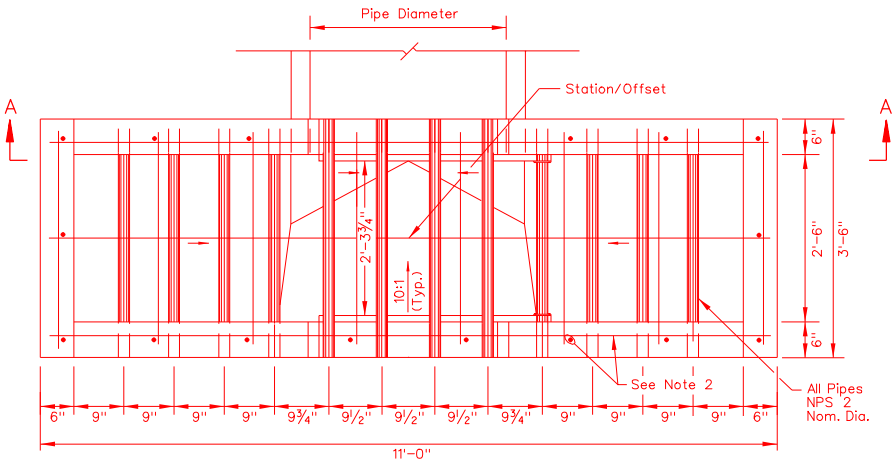

PLAN

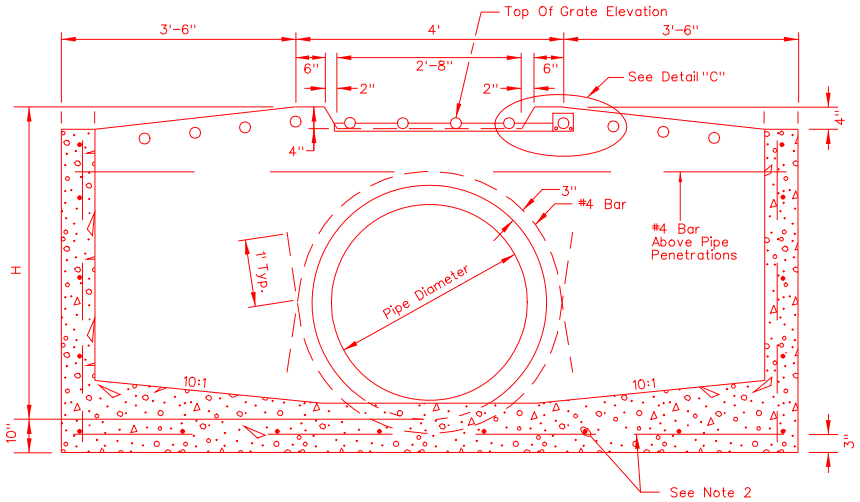

SECTION A-A

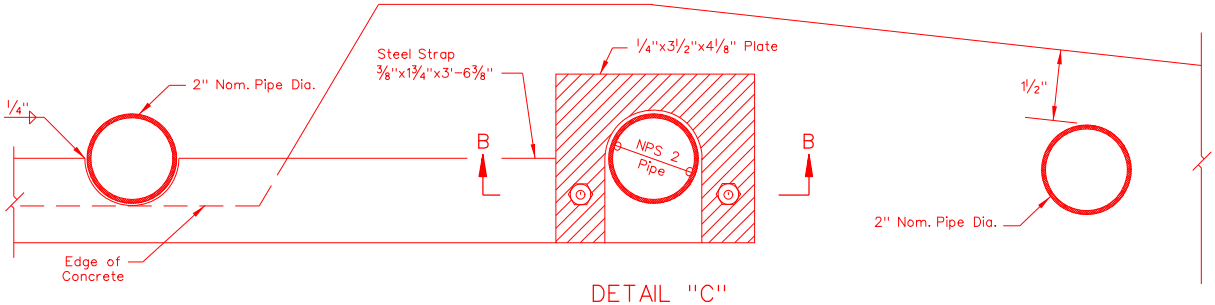

DETAIL "C"

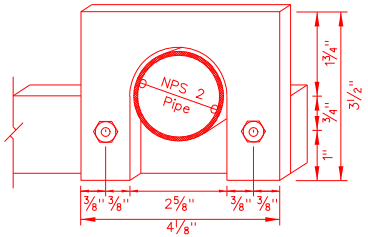

HINGE DETAIL

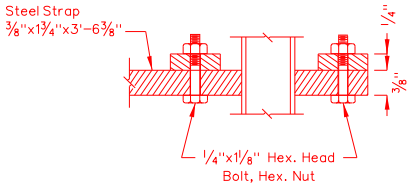

SECTION B-B

NOTES:

1. ALL CONCRETE SHALL BE CLASS A OR AA.
2. REINFORCING BARS SHALL BE NO. 4 BARS AT 18" CENTERS EMBEDDED 2" CLEAR OF CONCRETE SURFACE AND WIRED TIGHTLY AT ALL INTERSECTIONS, UNLESS OTHERWISE SHOWN.
3. ALL EXPOSED CONCRETE EDGES SHALL BE CHAMFERED 1".
4. DIMENSIONS MAY BE VARIED TO FIT LOCAL CONDITIONS AS DIRECTED BY THE ENGINEER.
5. NO DEDUCTIONS IN CONCRETE SHALL BE MADE FOR 2" CROSSBARS.
6. STEEL STRAP AND PIPE FOR CROSSBARS ARE INCLUDED IN THE STRUCTURAL STEEL GRATE QUANTITIES.
7. SLOPE CATCH BASIN FLOORS 10:1 FROM ALL DIRECTIONS TOWARD OUTLET PIPE. IF BASIN IS USED AS A JUNCTION, SHAPE FLOW LINE(S) TO OUTLET PIPE, AND PROVIDE A 10:1 SLOPE TO FLOW LINE(S).
8. PIPE PENETRATION MAY BE PLACED IN ANY WALL.
9. NPS = NOMINAL PIPE SIZE DESIGNATOR. SEE ASTM A53.
10. SEE SHEET R-2.9.1 FOR DETAILS IF CONNECTING TO HDPE PIPE.

TABLE OF QUANTITIES

Pipe Size	H Min.	Concrete (Cu. Yd.)	Reinf. Steel (lb)	Str. Stl. Grate (lb)
18"	3' 1"	2.89	111	168
24"	3' 7"	3.12	135	168
30"	4' 2"	3.38	140	168
36"	4' 8"	3.59	145	168
42"	5' 3"	3.83	168	168
48"	5' 9"	4.03	172	168

NEVADA DEPARTMENT OF TRANSPORTATION

DROP INLET
TYPE 8

Signed Original On File | R-4.2.4.1 (609)
CHIEF HYDRAULICS ENGINEER | ADOPTED 8/69 | REVISION 5/09