Nevada Department of Transportation

NEVADA DOT

www.nevadadot.com

Standard Plans for Road and Bridge Construction

Jim Gibbons
Governor

Susan Martinovich, P.E.
Director

2010 EDITION

FOREWORD TO 2010 ENGLISH STANDARD PLANS

Nevada Department of Transportation(NDOT) English Standard Plans are published every few years. All significant 2010 revisions to the 2007 Standard Plans will be shown in **"RED"** and new 2010 plan sheets will have the contents entirely in **"RED"**.

NDOT has adopted the MUTCD 2003 Edition and AASHTO's "A Policy on Geometric Design of Highways and Streets" 2001, Fourth Edition.

Conditional Use of Certain Sheets

Certain sheets will have **"Requires Chief Road Design Engineer Approval"** referenced in the General Notes-this means that the Chief Road Design Engineer must approve the use of the information depicted on that sheet. Another condition would be **"For Repair Only, not NCHRP 350 Approved for Test Level 3"**-this means that the information on that sheet is not to be used for new or retrofit construction and is for repair work only, check with the Designer.

This edition is part of a continuous process to update the Standard Plans. Updates to Standard Plans will reflect the impetus of NCHRP Report 350 requirements, however approved products are shown in the Qualified Products List(QPL), included within each advertised project's Special Provisions. If you find an error/omission or want to make a comment, make a copy of that sheet marked with your comments and mail to Standards and Manuals Engineer, Design Division, 1263 S. Stewart Street, Carson City, Nevada 89712.

Printed hardcopies or a CD version of the Standard Plans are available from Administrative Services, 1263 S. Stewart Street, Carson City, Nevada 89712, (775)-888-7070, Fax (775)-888-7101.

T A B L E O F C O N T E N T S

2010 ROAD DESIGN INDEX
ENGLISH VERSION

SHEET	DESCRIPTION	PAGE
	APPROACH ROADS	
R-S2.1	TYPE 1, 2, 3, 4 AND 5 APPROACH ROADS	R-1
	EXCAVATION AND BACKFILL	
R-1.1.1	STRUCTURE EXCAVATION AND BACKFILL (METHOD OF MEASUREMENT)	R-2
R-1.1.2	STRUCTURE EXCAVATION AND BACKFILL (METHOD OF MEASUREMENT)	R-3
R-1.1.3	STRUCTURE EXCAVATION AND BACKFILL (METHOD OF MEASUREMENT)	R-4
R-1.1.4	STRUCTURE EXCAVATION AND BACKFILL (METHOD OF MEASUREMENT)	R-5
R-1.1.5	STRUCTURE EXCAVATION AND BACKFILL (METHOD OF MEASUREMENT)	R-6
	DRAINAGE STRUCTURES AND HYDRAULICS	
R-1.1.6	CULVERT BEDDING & ALLOWABLE FILL HEIGHT FOR RCP	R-7
R-1.3.1.2	ALLOWABLE FILL HEIGHTS FOR STEEL CULVERTS	R-8
R-1.4.1	DRAINAGE DITCHES AND DIKES	R-9
R-2.1.1	CULVERT INSTALLATION	R-10
R-2.1.3	SLOTTED CMP DRAIN DETAILS	R-11
R-2.1.4	CULVERT INSTALLATION	R-12
R-2.2.1	METAL END SECTIONS, 12" to 84" CMP, & 17" x 13" CMAP to 83" x 57" CMAP	R-13
R-2.2.1.1	METAL END SECTIONS, 12" to 84" CMP, & 17" x 13" CMAP to 83" x 57" CMAP	R-14
R-2.2.2	METAL END SECTION (SAFETY TYPE) FOR METAL PIPES	R-15
R-2.2.2.1	METAL END SECTION (SAFETY TYPE) FOR METAL PIPES	R-16
R-2.2.3	METAL END SECTION (SAFETY TYPE) FOR CONCRETE PIPES	R-17
R-2.2.3.1	METAL END SECTION (SAFETY TYPE) FOR CONCRETE PIPES	R-18
R-2.3.1	RCP END SECTION, 18" to 54" RCP	R-19
R-2.3.1.1	CULVERT END SAFETY GRATE 30" to 60" CMP or RCP	R-20
R-2.4.1	CULVERT HEADWALLS, 12" to 42" CMP	R-21
R-2.4.1.1	CULVERT HEADWALLS, 12" to 42" CMP	R-22
R-2.4.2	CULVERT HEADWALLS, 48" to 72" CMP	R-23
R-2.4.2.1	CULVERT HEADWALLS, 48" to 72" CMP	R-24
R-2.5.1	CULVERT HEADWALLS, 12" to 36" RCP	R-25
R-2.5.1.1	CULVERT HEADWALLS, 12" to 36" RCP	R-26
R-2.5.2	CULVERT HEADWALLS, 42" to 72" RCP	R-27
R-2.5.2.1	CULVERT HEADWALLS, 42" to 72" RCP	R-28
R-2.6.1	CULVERT HEADWALLS, 17" x 13" to 83" x 57" CMAP	R-29
R-2.6.1.1	CULVERT HEADWALLS, 17" x 13" to 83" x 57" CMAP	R-30
R-2.7.1	CULVERT HEADWALLS, 23" x 14" to 60" x 38" OVAL RCP	R-31
R-2.7.1.1	CULVERT HEADWALLS, 23" x 14" to 60" x 38" OVAL RCP	R-32
R-2.7.2	CULVERT HEADWALLS, 68" x 43" to 91" x 58" OVAL RCP	R-33
R-2.8.1	COUPLING BAND DETAILS, CMP AND PIPE ARCHES	R-34
R-2.8.2	CMP COUPLING BAND DETAILS	R-35
R-2.9.1	HDPEPIPE CONNECTION/TERMINATION DETAILS	R-36
R-3.1.2	EMBANKMENT PROTECTOR, TYPE 5	R-37
R-3.1.3	EMBANKMENT PROTECTOR, TYPE 5-2G	R-38
R-3.1.4	RIPRAP APRON, GABIONS LACING DETAIL	R-39
R-3.1.5	RIPRAP APRON	R-40
R-4.1.1	PIPE RISER INLET, TYPE 3	R-41
R-4.2.1	DROP INLET TYPE 2	R-42

2010 ROAD DESIGN INDEX (CONTINUED)
ENGLISH VERSION

SHEET	DESCRIPTION	PAGE
R-4.2.1.1	DROP INLET TYPE 2A	R-43
R-4.2.2	DROP INLET TYPE 2B	R-44
R-4.2.3	DROP INLET TYPE 3	R-45
R-4.2.3.1	DROP INLET TYPE 3	R-46
R-4.2.4	DROP INLET TYPE 7	R-47
R-4.2.4.1	DROP INLET TYPE 8	R-48
R-4.2.5	DROP INLET TYPE 10	R-49
R-4.2.6	DROP INLET TYPE 11	R-50
R-4.2.7	DROP INLET CONCRETE APRON	R-51
R-4.2.8	TRENCH DRAIN DETAIL	R-52
R-4.3.1	TYPE 1 & 2 AND TYPE 1 & 2 MODIFIED MANHOLES	R-53
R-4.3.2	TYPE 4 MANHOLE	R-54
R-4.3.3	MANHOLE COVER, FRAME, & CONCRETE COLLAR	R-55

CURBS, GUTTERS, AND SIDEWALKS

R-5.1.1	CURB & GUTTERS	R-56
R-5.2	SIDEWALKS	R-57
R-5.2.1	SIDEWALKS, CURB RAMPS (NEW CONSTRUCTION)	R-58
R-5.2.2	SIDEWALKS, CURB RAMPS (EXISTING SIDEWALKS)	R-59
R-5.2.3	MEDIAN ISLANDS, CURB RAMPS, AND ISLAND PAVING	R-60
R-5.2.4	ISLAND CURB RAMPS	R-61
R-5.3.1	DRIVEWAY GEOMETRICS, TYPE C AND TYPE R	R-62
R-5.3.2	SINGLE FAMILY DRIVEWAYS WITH CURB	R-63
R-5.3.3	MULTI-FAMILY, COMMERCIAL & INDUSTRIAL DRIVEWAY DETAILS	R-64

CONDUIT INSTALLATION

R-5.4.1	CONDUIT INSTALLATION FOR FUTURE WATER LINES	R-65

FENCES AND CATTLEGUARDS

R-6.1.1	FENCE DETAILS	R-66
R-6.1.2	NEVADA 4-WIRE FENCE PANEL DETAILS (TYPE C-NV-4B)	R-67
R-6.1.2.1	NEVADA 4-WIRE FENCE PANEL DETAILS (TYPE C-NV-4B)	R-68
R-6.1.2.2	NEVADA 4-WIRE FENCE GATE DETAILS (TYPE C-NV-4B)	R-69
R-6.1.3	GATE AND FENCE DETAILS	R-70
R-6.1.4	HIGH-TENSILE 8-WIRE RANGE FENCE	R-71
R-6.2.1	BENCH FENCE AND CATTLE PASS FENCING	R-72
R 6.3.2	FENCE DETAILS SWING GATES FOR UP TO 72” CHAIN LINK 3B FENCE	R-73
R-6.3.2.1	FENCE DETAILS CHAIN LINK FENCE AND TORTOISE FENCE	R-74
R-6.3.3	FENCE DETAILS SWING GATE FOR UP TO 72” CHAIN LINK FENCE	R-75
R-7.1.1	STEEL CATTLE GUARD, 12' to 20' ROADBED	R-76
R-7.1.1.1	STEEL CATTLE GUARD, 12' to 20' ROADBED	R-77
R-7.1.2	STEEL CATTLE GUARD, 26' to 40' ROADBED	R-78
R-7.1.2.1	STEEL CATTLE GUARD, 26' to 40' ROADBED	R-79
R-7.1.3	STEEL CATTLE GUARD (TYPE B)	R-80
R-7.1.3.1	STEEL CATTLE GUARD (TYPE B)	R-81
R-7.1.4	STEEL CATTLE GUARD (TYPE C)	R-82
R-7.1.4.1	STEEL CATTLE GUARD (TYPE C)	R-83
R-7.1.5	STEEL CATTLE GUARD TIMBER FOUNDATION	R-84
R-7.1.5.1	STEEL CATTLE GUARD TIMBER FOUNDATION	R-85
R-7.1.6	PRECAST CATTLE GUARD	R-86
R-7.1.6.1	PRECAST CATTLE GUARD	R-87

2010 ROAD DESIGN INDEX (CONTINUED)
ENGLISH VERSION

SHEET	DESCRIPTION	PAGE
R-7.1.6.2	PRECAST CATTLE GUARD	R-88
R-7.1.6.3	PRECAST CATTLE GUARD	R-89
R-7.1.9	STEEL CATTLE GUARD GRID, WINGS, & FOUNDATION (BLM)	R-90
R-7.1.9.1	STEEL CATTLE GUARD GRID, WINGS, & FOUNDATION (BLM)	R-91

TRAFFIC BARRIERS

R-8.1.1	TYPICAL GUARDRAIL INSTALLATION	R-92
R-8.1.2	TYPICAL GUARDRAIL INSTALLATION	R-93
R-8.2.1	GUARDRAIL TERMINALS GRADING PLAN	R-94
R-8.2.2	TRAILING END ANCHOR	R-95
R-8.2.3	BURIED END ANCHOR – W-BEAM & THRIE BEAM	R-96
R-8.2.4	SPECIAL GUARDRAIL INSTALLATION CRT POST	R-97
R-8.2.4.1	ANCHOR TERMINAL	R-98
R-8.3.1	GUARDRAIL INSTALLATION DEFLECTIONS AND BACK SPACING	R-99
R-8.3.2	GUARDRAIL INSTALLATION MODIFIED POST	R-100
R-8.4.1	GALVANIZED GUARDRAIL TRIPLE CORRUGATION-WOOD POST	R-101
R-8.4.1.1	GALVANIZED GUARDRAIL TRIPLE CORRUGATION-STEEL POST	R-102
R-8.4.2	GUARDRAIL-BRIDGE RAIL CONNECTION, TRIPLE CORRUGATION	R-103
R-8.4.3	GUARDRAIL-BARRIER RAIL CONNECTION, TRIPLE CORRUGATION	R-104
R-8.5.1	GALVANIZED GUARDRAIL, W-BEAM	R-105
R-8.5.2	GUARD RAIL-BRIDGE RAIL CONNECTIONS, W-BEAM	R-106
R-8.5.3	GUARD RAIL-BARRIER RAIL CONNECTIONS, W-BEAM	R-107
R-8.6.1	CONCRETE BARRIER RAIL	R-108
R-8.6.2	CONCRETE BARRIER RAIL	R-109
R-8.6.3	CONCRETE BARRIER RAIL TYPE A TO TYPE FA	R-110
R-8.6.4	CONCRETE BARRIER RAIL TYPE A TO F-SHAPE TYPE A	R-111
R-8.6.5	VERTICAL TAPER CONCRETE BARRIER RAIL	R-112
R-8.7.1	PORTABLE PRECAST CONCRETE BARRIER RAIL	R-113
R-8.7.1.1	PORTABLE PRECAST CONCRETE BARRIER RAIL	R-114
R-8.8.1	TEMPORARY TRAFFIC SCREEN "F"	R-115

DELINEATORS, MISC.

R-9.1.1	GUIDE POSTS	R-116
R-9.2.1	OBJECT MARKERS	R-117
R-9.2.2	REFLECTORS GUARDRAIL - GUIDE POST	R-118
R-9.3	SURVEY MONUMENTS	R-119

CONCRETE PAVEMENT

R-10.1.1	PLAIN JOINTED CONCRETE PAVEMENT DETAILS	R-120
R-10.1.2	DOWELED CONCRETE PAVEMENT DETAILS	R-121
R-10.1.3	WEAKENED PLANE JOINTS CONCRETE	R-122

RUMBLE STRIPS

R-10.1.4	RUMBLE STRIPS-RURAL PLANTMIX BITUMINOUS SURFACE	R-123
R-10.1.5	RUMBLE STRIPS-RAMPS/STRUCTURES	R-124
R-10.1.6	RUMBLE STRIPS-CENTERLINE	R-125
R-10.1.6.1	RUMBLE STRIPS-CENTERLINE	R-126

2010 ROAD DESIGN INDEX
ENGLISH VERSION

SHEET	DESCRIPTION	PAGE
	MAILBOXES	
R-12.1.1	MAILBOX TURNOUTS	R-127
R-12.1.2	MAILBOX SUPPORTS	R-128
R-12.1.3	MAILBOX SUPPORTS	R-129

2010 TRAFFIC DESIGN INDEX
ENGLISH VERSION

SHEET	DESCRIPTION	PAGE
	LIGHTING AND SIGNALS	
T-30.1.2	TYPE 1A AND 1B POLES, OPTICAL MOUNT & TERMINAL COMPARTMENTS	T-1
T-30.1.2.1	TRENCHING DETAIL	T-2
T-30.1.3	SIGNAL MOUNTING PEDESTRIAN SIGNALS	T-3
T-30.1.3.1	PEDESTRIAN PUSH BUTTON DETAILS	T-4
T-30.1.3.2	INTERNALLY ILLUMINATED STREET NAME SIGNS	T-5
T-30.1.3.3	FLASHING WARNING SIGN SCHOOL ZONE FLASHER	T-6
T-30.1.3.4	PEDESTRIAN PUSH BUTTON EXTENSION	T-7
T-30.1.4	LOOP DETECTORS	T-8
T-30.1.4.1	NO. 5 PULL BOX AND PAVEMENT JOINT LOOP CROSSING DETAILS	T-9
T-30.1.4.2	AVC DETECTOR LOOP CONFIGURATIONS AND NOTES	T-10
T-30.1.4.3	SPEED DETECTOR LOOP CONFIGURATION AND NOTES	T-11
T-30.1.4.4	ATR DETECTOR LOOP CONFIGURATION AND NOTES	T-12
T-30.1.5	CONTROLLER CABINETS	T-13
T-30.1.6	100 & 200 AMP UNDERGROUND ELECTRICAL SERVICE	T-14
T-30.1.6.2	TRANSFORMER PAD BARRIER POST	T-15
T-30.1.8	SIGNAL POLE AND LOOP DETECTOR LOCATIONS FOUNDATION ISLAND	T-16
T-30.1.9	SAFETY BASE	T-17
T-30.1.10	TYPE 7 & 14 POLE LIGHTING & SIGNAL LIGHT POLES	T-18
T-30.1.11	HIGH MAST LIGHT POLE AND FOUNDATION DETAILS	T-19
T-30.1.11.1	HIGH MAST LIGHT POLE AND FOUNDATION DETAILS	T-20
T-30.1.11.2	MEDIAN PULL BOX LOCATION DETAIL	T-21
T-30.1.12	TYPE 28 POLE	T-22
T-30.1.13	TYPE 30 AND 35 POLES	T-23
T-30.1.14	TYPE 30 & 30A, 35 & 35A LOADING INFORMATION	T-24
T-30.1.15	TYPE 30 & 30A, 35 & 35A DETAILS	T-25
T-30.1.16	PILE FOUNDATION, POLE GROUNDING DETAIL, CONDUCTOR SPLICE METHODS	T-26
T-30.1.16.1	SIGN LIGHTING FIXTURES	T-27
T-30.1.17	TRAFFIC SIGNAL SIGN PLACEMENT	T-28
T-30.1.18	PULL BOXES & ELECTRICAL MANHOLE FRAME & COVER	T-29
T-30.1.19	UNDERPASS LUMINAIRES & JUNCTION BOX	T-30
T-30.1.20	BRIDGE/BARRIER RAIL JUNCTION BOX TYPE 1 AND 2	T-31
	ROADSIDE SIGNS	
T-31.1.1	GENERAL SIGN LOCATION	T-32
T-31.1.2	GENERAL POST SELECTION CHARTS	T-33
T-31.1.3	GENERAL SIGN PANEL BRACING	T-34
T-31.1.4	GENERAL SIGN PANEL BRACING	T-35
T-31.1.5	GENERAL SIGN PANEL BRACING	T-36

2010 TRAFFIC DESIGN INDEX (CONTINUED)
ENGLISH VERSION

SHEET	DESCRIPTION	PAGE
T-31.1.6	GENERAL SIGN ISLANDS	T-37
T-31.2.1	SQUARE METAL POSTS	T-38
T-31.3.1	ROUND METAL POSTS UNBRACED	T-39
T-31.3.2	ROUND METAL POSTS MULTI-DIRECTIONAL SLIP BASE	T-40
T-31.4.1	ROUND METAL POSTS BRACED	T-41
T-31.4.2	ROUND METAL POSTS BRACED	T-42
T-31.4.3	ROUND METAL POSTS BRACED	T-43
T-31.5.1	TIMBER GENERAL	T-44
T-31.5.2	TIMBER GORE SIGNS	T-45
T-31.6.1	SPECIAL PIVOT POST	T-46
	TRAFFIC CONTROL	
T-35.1.1	TRAFFIC CONTROL TABLES/NOTES FOR SHEETS T-35.1.2 thru T-35.1.17	T-47
T-35.1.2	ONE LANE CLOSURES	T-48
T-35.1.3	PORTABLE PRECAST CONC. RAIL CLOSURES	T-49
T-35.1.4	MULTILANE CLOSURES	T-50
T-35.1.5	HALF ROAD CLOSURE (MULTILANE UNDIVIDED)	T-51
T-35.1.6	MULTILANE SHIFT	T-52
T-35.1.7	MEDIAN CROSSOVER (MULTILANE DIVIDED)	T-53
T-35.1.9	EXIT RAMP AND SHOULDER WORK	T-54
T-35.1.10	HAUL ROAD	T-55
T-35.1.11	SHOULDER DROP OFF/UNEVEN LANES/LOOSE GRAVEL/DUST HAZARD/BUMP	T-56
T-35.1.12	INTERSECTION WORK (OUTSIDE LANE)	T-57
T-35.1.13	INTERSECTION WORK (MEDIAN WITH ISLAND)	T-58
T-35.1.14	INTERSECTION WORK (MEDIAN WITH NO ISLAND)	T-59
T-35.1.15	INTERSECTION WORK-NO FLAGGERS (OUTSIDE LANE)	T-60
T-35.1.16	INTERSECTION WORK-NO FLAGGERS (MEDIAN WITH ISLAND)	T-61
T-35.1.17	INTERSECTION WORK-NO FLAGGERS (MEDIAN WITH NO ISLAND)	T-62
T-35.2	TRAFFIC CONTROL BARRICADES	T-63
	RAILROAD CROSSING	
T-35.3	SIGNAL & GATE PLACEMENT/PAVEMENT MARKINGS	T-64
T-35.3.1	GUARDRAIL DETAILS	T-65
	MEDIAN CROSSOVER AND PAVED CHAIN AREAS	
T-35.4	SIGNAGE FOR PAVED CHAIN INSTALLATION AREA	T-66
T-35.5	MEDIAN CROSSOVER DETAIL	T-67
	OVERHEAD SIGNS	
T-36.1.1	INSTRUCTIONS & EXAMPLES	T-68
T-36.1.2	SINGLE POST TYPES II THRU VII	T-69
T-36.1.3	TWO POST TYPES I-S THRU VII-S	T-70
T-36.1.4	SINGLE POST STRUCTURAL FRAME MEMBERS	T-71
T-36.1.5	TWO POST STRUCTURAL FRAME MEMBERS	T-72
T-36.1.6	STRUCTURAL FRAME DETAILS	T-73
T-36.1.7	FRAME JUNCTURE DETAILS	T-74
T-36.1.8	REMOVABLE SIGN PANEL FRAMES	T-75
T-36.1.8.1	REMOVABLE SIGN PANEL FRAMES 110" & 120" SIGN PANELS	T-76
T-36.1.8.2	EXTENSION BRACKET RETRO METHOD A	T-77
T-36.1.8.3	EXTENSION BRACKET RETRO METHOD B	T-78

2010 TRAFFIC DESIGN INDEX (CONTINUED)
ENGLISH VERSION

SHEET	DESCRIPTION	PAGE
T-36.1.9	WALKWAY DETAILS NO. 1	T-79
T-36.1.10	WALKWAY DETAILS NO. 2	T-80
T-36.1.10.1	OVERHEAD SIGN – LUMINAIRE RETRIEVAL SYSTEM	T-81
T-36.1.11	WALKWAY SAFETY RAILING DETAILS	T-82
T-36.1.12	ALTERNATE PILE FOUNDATION	T-83
T-36.1.13	LIGHTWEIGHT TYPE C CONNECTION DETAILS	T-84
T-36.1.14	LIGHTWEIGHT SIGN PANEL MOUNTING DETAILS	T-85
T-36.1.15	LIGHTWEIGHT (LIGHT FIXTURE MOUNTING DETAILS)	T-86
T-36.1.16	LIGHTWEIGHT POST DETAILS	T-87
T-36.1.17	LIGHTWEIGHT FOUNDATION	T-88

STRIPING

T-37.1.1	PERMANENT RAISED PAVEMENT MARKERS	T-89
T-37.1.2	TEMPORARY LANE LINE MARKERS	T-90
T-38.1.1	PERMANENT PAVEMENT MARKINGS: BICYCLE/HOV/ARROWS	T-91
T-38.1.2	PERMANENT STORAGE LANES, TURN ARROWS, & ONLY'S	T-92
T-38.1.3	PERMANENT/TEMPORARY PAVEMENT MARKINGS: CROSSWALKS	T-93
T-38.1.4	PERMANENT PAVEMENT MARKINGS: LETTERS/NUMBERS	T-94
T-38.1.5	RAISED ISLAND DELINEATION	T-95
T-38.1.6	AIRPLANE MONITORING SYMBOL	T-96
T-38.1.7	RAMP METERING AND HOV PAVEMENT MARKINGS	T-97

DYNAMIC MESSAGE SIGN (DMS)

M-1.1	GENERAL NOTES	M-1
M-1.2	ELEVATION	M-2
M-1.3	STRUCTURAL FRAME MEMBERS	M-3
M-1.4	STRUCTURAL FRAME DETAILS	M-4
M-1.5	POST DETAILS	M-5
M-1.6	FRAME JUNCTURE DETAILS	M-6
M-1.7	SUPPORT DETAILS	M-7
M-1.8	CATWALK LAYOUT	M-8
M-1.9	FOUNDATION DETAILS	M-9
M-1.10	DMS MAINTENANCE PAD	M-10
M-1.11	CABINET FOUNDATION, TYPE 1	M-11
M-1.12	CABINET FOUNDATION, TYPE 2	M-12
M-1.13	TYPE 9 PULL BOX, MODOFIED	M-13
M-1.14	ITS CONDUIT CONFIGURATION	M-14

2010 BRIDGE DESIGN INDEX
ENGLISH VERSION

SHEET	DESCRIPTION	PAGE

CULVERTS AND HEADWALLS

B-20.1.1	RCB, CULVERTS, GENERAL NOTES	B-1
B-20.1.2	SINGLE RCB CULVERTS	B-2
B-20.1.2.1	SINGLE RCB CULVERTS	B-3
B-20.1.3	DOUBLE RCB CULVERTS	B-4
B-20.1.3.1	DOUBLE RCB CULVERTS	B-5
B-20.1.3.2	ADDITIONAL CELLS USED W/DOUBLE RCB CULVERTS MULT. CELL CULVERTS	B-6
B-20.1.4	RCB CULVERTS TYPE II HEADWALLS	B-7
B-20.1.4.1	RCB CULVERTS TYPE II HEADWALLS	B-8

2010 BRIDGE DESIGN INDEX (CONTINUED)
ENGLISH VERSION

SHEET	DESCRIPTION	PAGE
B-20.1.5	RCB CULVERTS TYPE I HEADWALLS	B-9
B-20.1.5.1	RCB CULVERTS TYPE I HEADWALLS	B-10
B-20.1.6	ESTIMATE OF QUANTITIES TYPE I HEADWALLS	B-11
B-20.1.7	METHOD OF EXTENDING RCB CULVERTS	B-12
B-20.1.8	PRECAST CONCRETE BOX CULVERT	B-13
	“HP” PILE	
B-23.1.4	"HP" PILE DETAILS	B-14
	PRDESTRIAN RAIL	
B-25.1.4	PEDESTRIAN RAIL TYPE "M"	B-15
B-25.1.5	PEDESTRIAN RAIL TYPE "R"	B-16
B-25.1.6	PEDESTRIAN RAIL TYPE "R" (MODIFIED)	B-17
B-25.1.7	PEDESTRIAN RAIL TYPE "V"	B-18
	SLOPE PAVING, GIRDERS, APPROACH SLAB	
B-26.1.1	CONCRETE SLOPE PAVING DETAILS	B-19
B-28.1.1	CAST-IN-PLACE PRESTRESSED GIRDER DETAILS	B-20
B-29.1.1	APPROACH SLAB	B-21
	CANTILEVER RETAINING WALLS	
B-30.1.1	TYPES 1A & 1B CANTILEVER CONCRETE RETAINING WALLS	B-22
B-30.1.2	TYPE 2 CANTILEVER CONCRETE RETAINING WALL	B-23
B-30.1.3	CANTILEVER CONCRETE RETAINING WALL DETAILS NO. 1	B-24
B-30.1.4	CANTILEVER CONCRETE RETAINING WALL DETAILS NO. 2	B-25
B-30.1.5	CANTILEVER CONCRETE RETAINING WALL DETAILS NO. 3	B-26

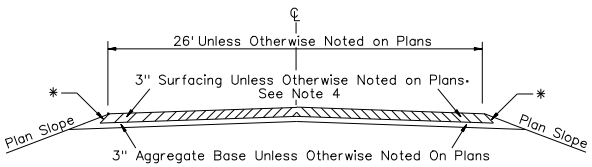

SECTION A-A

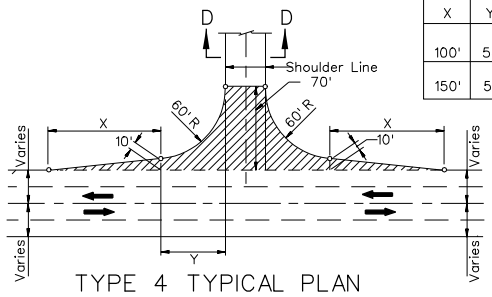

TYPE 4 TYPICAL PLAN

X	Y	Design Speed V_D
100'	54'	≯L 45 mph
150'	56'	≥ 45 mph

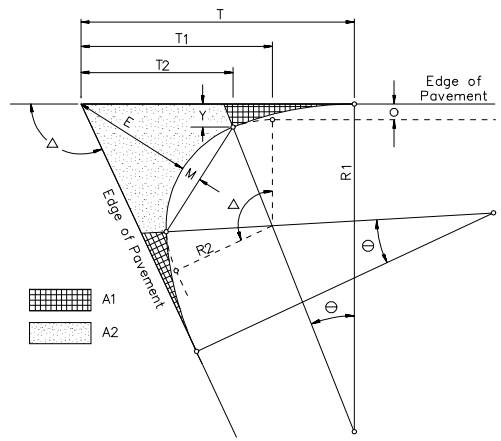

3 CENTERED CURVE

Given: Δ, o, R1 and R2
To Find: T, T1, T2, E, M, θ, v, and Area External to Comp. Curve

$T_1 = (R_2 + o) \tan \frac{\Delta}{2}$

$T = T_1 + (R_1 - R_2) \sin \theta$

$T_2 = T_1 - R_2 \sin \theta$

$E = \frac{R_2 + o}{\cos \frac{\Delta}{2}} - R_2$

$M = R_2 - [R_2 \cos (\frac{\Delta}{2} - \theta)]$

$\theta = \cos^{-1} \frac{R_1 - R_2 - o}{R_1 - R_2}$

$y = (R_2 + o) - R_2 \cos \theta$

$\text{Area} = A_1 + A_2$

$A_1 = \frac{1}{2}[R_1^2 \tan \theta \frac{\pi R_1^2 \theta}{180}]$

$A_2 = (R_2 + o)[T_1 - (R_2 + o) \tan \theta] - \frac{\pi R_2^2 (\frac{\Delta}{2} - \theta)}{180}$

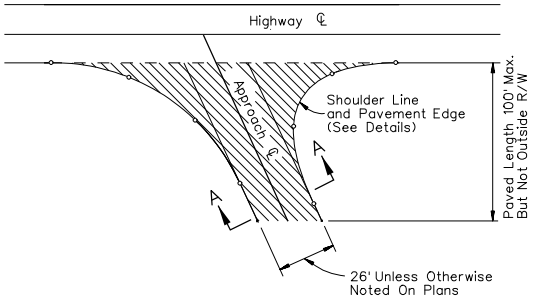

PLAN

TYPE 1 APPROACH (3-CENTERED CURVE)

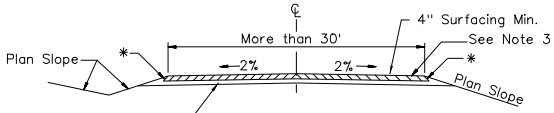

SECTION D-D

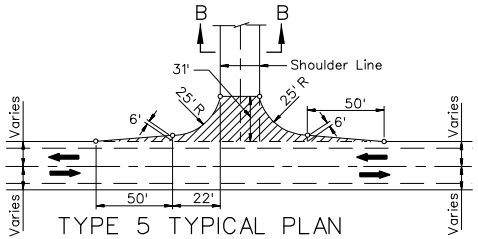

TYPE 5 TYPICAL PLAN

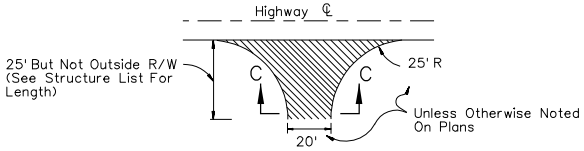

TYPE 2 & 3 APPROACHES

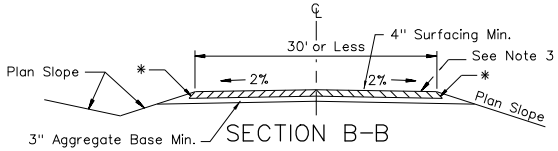

SECTION B-B

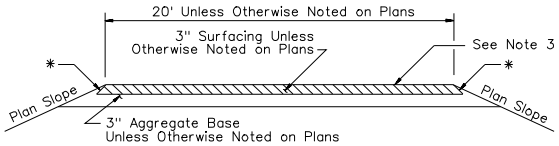

SECTION C-C

APPROACH TYPES

Type 2A - Place Base and Surface as Shown
Type 2B - Place 6" Aggregate Base Course Only
Type 3 - Grade Approach Area Only

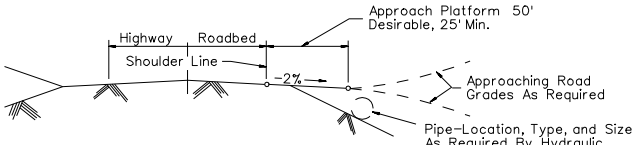

TYPE 4 & 5 TYPICAL PROFILE
Right Angle Road Connection

TYPE 4 AND 5 APPROACHES

NOTES:

1. SEE THE CURRENT ADOPTED EDITION OF THE AASHTO "A POLICY ON GEOMETRIC DESIGN OF HIGHWAYS AND STREETS" FOR FURTHER INFORMATION ON AT-GRADE INTERSECTIONS AND DESIGN VEHICLES.
2. DETAILS FOR THE SPECIAL APPROACHES WILL BE SHOWN ON THE PLANS WHEN THEY ARE REQUIRED.
3. PAVED APPROACHES SHALL HAVE A SEAL COAT UNLESS OTHERWISE NOTED.
4. APPROACHES TO BE PAVED TO THE THROAT OR RIGHT-OF-WAY, WHICHEVER OCCURS FIRST, UNLESS OTHERWISE NOTED ON THE PLANS.
5. APPROACHES MAY REQUIRE THE STANDARD STOP SIGNS AND STOP BARS AS DIRECTED BY THE ENGINEER.

LEGEND:

* - ANGLE OF REPOSE

NEVADA DEPARTMENT OF TRANSPORTATION

TYPE 1, 2, 3, 4 AND 5
APPROACH ROADS

Signed Original On File	R-S2.1	(000)
CHIEF ROAD DESIGN ENGR.	ADOPTED 7/96	REVISION 2/04

R-1

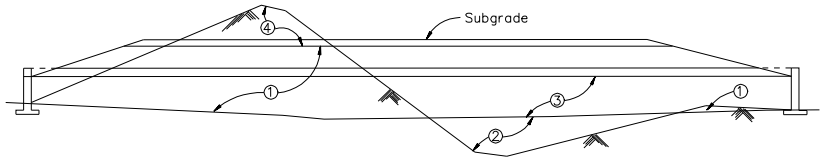

CULVERT INSTALLATION IN ROUGH TERRAIN

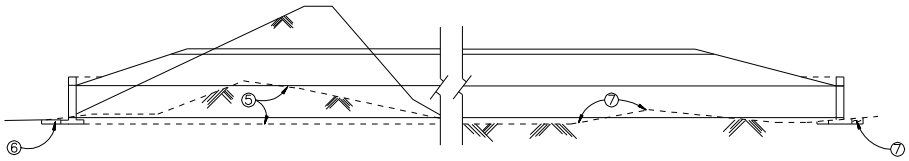

CULVERT INSTALLATION WITH UNSUITABLE FOUNDATIONS

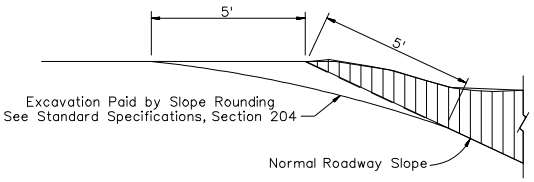

ROUNDED OR TRANSITION SLOPES

Cut Slopes Steeper than 5:1 will be Rounded, Except in Rock

①- Structure Excavation and Backfill in Excavation to be Paid Below Subgrade and Within Designated Limits.
②- Embankment to be Constructed to Flowline Prior to Installation.
③- Backfill in Embankment to be Paid From Flowline to the Designated Maximum Limits.
④- Roadway Excavation to be Paid to Subgrade.
⑤- CMP, HDPE or RCP ~ When the Pipe is Laid in a Trench in Rock, Hard Clay, Shale or Other Hard Material, the Unsuitable Material Shall Be Removed to a Depth of Not Less Than 6" for RCP & 12" For CMP, HDPE Below the Bottom of the Pipe Grade and the Trench Backfilled With a Suitable Material. In No Place Shall the Pipe Be Laid Directly on Unsuitable Material.
⑥- No Additional Excavation is Necessary Under Headwalls When Rock or Other Hard Material is Encountered.
⑦- When a Firm Foundation is Not Encountered All Soft, Spongy or Other Unsuitable Material Under the Culvert Shall Be Removed, and the Space Filled With Foundation Fill. (Depth of Foundation Fill as Indicated on the Plans or Ordered by the Engineer, But Not Less Than 1'-6").
⑧- Grade To This Elevation Prior To Installation.

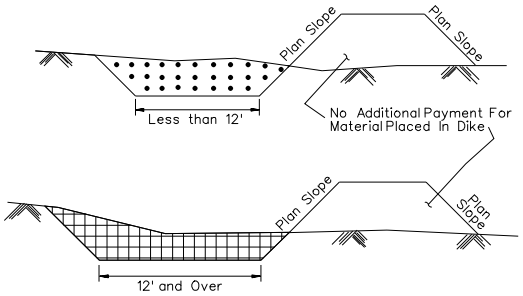

FLAT BOTTOM DITCH EXCAVATION

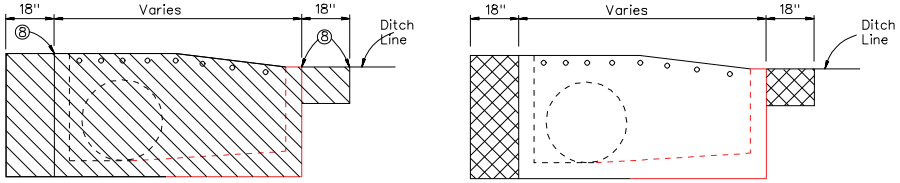

TYPE 7 DROP INLET

LEGEND:

- STRUCTURE EXCAVATION
- GRANULAR BACKFILL
- ROADWAY EXCAVATION
- CHANNEL EXCAVATION
- DRAINAGE EXCAVATION

GENERAL NOTE:

1. EXCAVATIONS FOR MULTIPLE PIPE INSTALLATIONS 12' AND OVER IN WIDTH WILL BE PAID AS CHANNEL OR ROADWAY EXCAVATION.

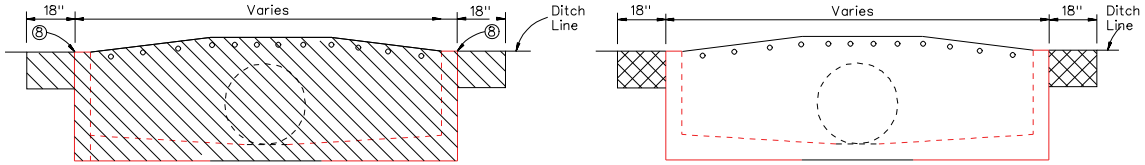

TYPE 8 DROP INLET

NEVADA DEPARTMENT OF TRANSPORTATION

STRUCTURE EXCAVATION
& BACKFILL
(METHOD OF MEASUREMENT)

Signed Original On File	R-1.1.1	(206,207)
CHIEF ROAD DESIGN ENGR.	ADOPTED 8/69	REVISION 5/09

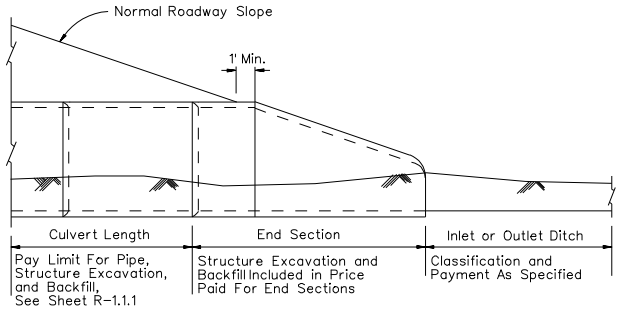

PRECAST CONCRETE END SECTIONS

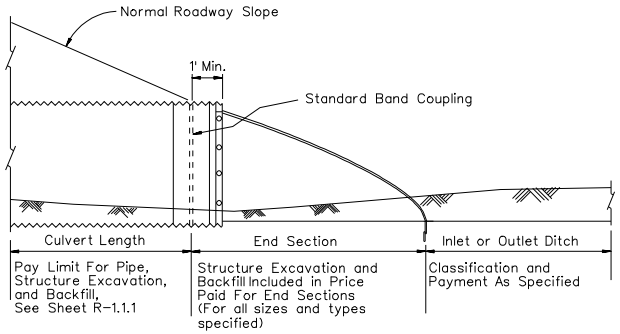

PREFABRICATED METAL END SECTION
Type 3 Connection

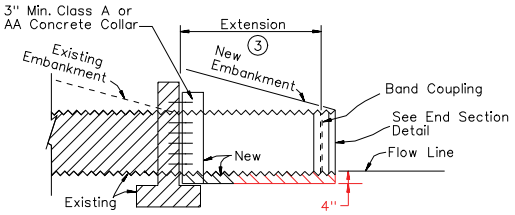

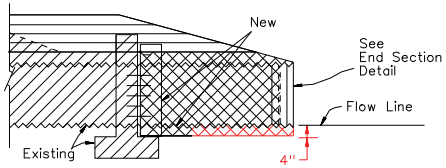

CULVERT EXTENSION OF EXISTING HEADWALL
See Sheet R-2.1.1 For Pipe Culvert Extension

LEGEND:

- Granular Backfill
- Structure Excavation
- Limits of Existing
- Roadway Embankment

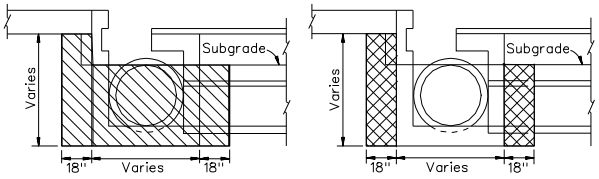

DROP INLETS IN EXCAVATION
Type 3 Drop Inlet Illustrated

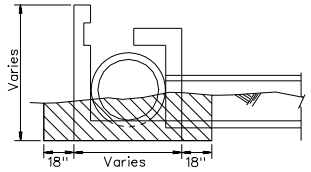

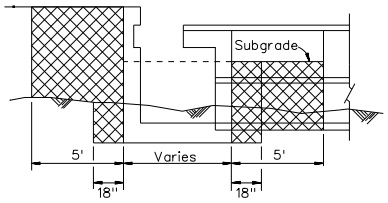

DROP INLETS IN EMBANKMENT
Type 3 Drop Inlet Illustrated

1. Roadway, Channel Excavation or Drainage Excavation.
2. Payment For Backfill and Structure Excavation To Be Included In Price Paid For Slope Paving or Channel Lining.
3. Length of Culvert Shall Be Increased As Follows: Consider Each Side Separately. Measure Pipe From Existing Headwall To The Intersection of the Top of Pipe And Fillslope. To This Dimension Add 1' When Cover At Shoulder Is 1' to 10'. Add An Additional ½' For Each Succeeding 5' or Portion Thereof.

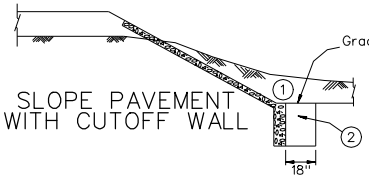

SLOPE PAVEMENT WITH CUTOFF WALL

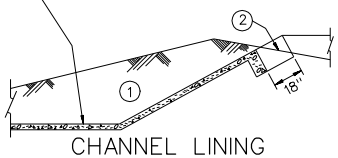

CHANNEL LINING

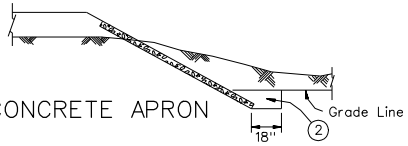

CONCRETE APRON

CHANNEL LINING AND SLOPE PAVEMENT
Width and Depth To Be Specified

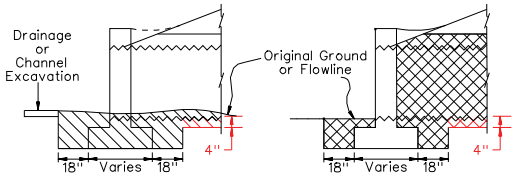

IN EXCAVATION IN EMBANKMENT

CULVERT HEADWALLS

See Sheet R.1.1.1 for General Notes.

NEVADA DEPARTMENT OF TRANSPORTATION

STRUCTURE EXCAVATION AND BACKFILL (METHOD OF MEASUREMENT)

Signed Original On File	R-1.1.2	(206,207)
CHIEF ROAD DESIGN ENGR.	ADOPTED 8/69	REVISION 5/09

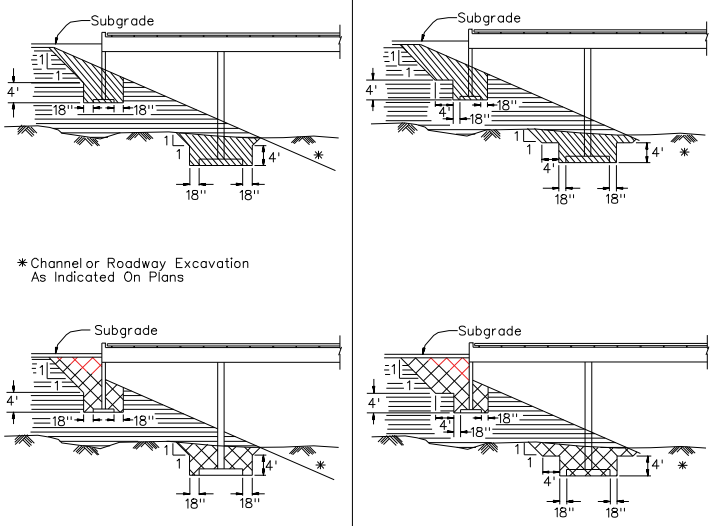

* Channel or Roadway Excavation As Indicated On Plans

OPEN ABUTMENT BRIDGES WITH SPREAD FOOTING

Footing Width Is 6' Or Less

Footing Width Is Greater Than 6'

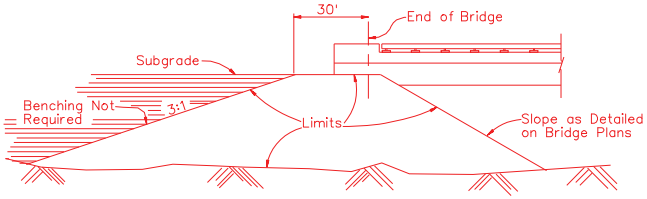

LIMITS OF SELECTED BORROW AT BRIDGE OPEN ABUTMENTS

NOTES:

1. TRENCHES MORE THAN 4' DEEP SHALL BE SHORED, LAID BACK TO AT LEAST THE ANGLE OF REPOSE FOR EXISTING FIELD CONDITIONS, OR SOME OTHER MEANS OF PROTECTION SHALL BE PROVIDED.
2. IF HAZARDOUS FIELD CONDITIONS INDICATE GROUND MOVEMENT MAY BE EXPECTED, TRENCHES LESS THAN 4' DEEP SHALL ALSO BE PROTECTED AS INDICATED IN NOTE 1.
3. FOR THE PURPOSE OF PAYMENT, STRUCTURE EXCAVATION AND BACKFILL QUANTITIES ARE BASED ON THESE STANDARD DRAWINGS AND NO ADDITIONAL PAYMENT WILL BE MADE FOR SHORING.
4. IF SHORING IS USED, PAYMENT WILL BE MADE FOR STRUCTURE EXCAVATION AND BACKFILL BASED ON THESE STANDARD DRAWINGS AND NO ADDITIONAL PAYMENT WILL BE MADE FOR SHORING.
5. TRENCH EXCAVATION SHORING SHALL CONFORM TO OSHA REGULATIONS 29 CFR PART 1926, SUBPART P, APPENDIX C.
6. THE QUANTITY OF STRUCTURE EXCAVATION AND BACKFILL MEASURED FOR PAYMENT SHALL BE THE NUMBER OF CUBIC YARDS CALCULATED MINUS ANY DUPLICATION OF LIMITS WHICH OVERLAP.
7. THE LIMITS OF STRUCTURE EXCAVATION AND BACKFILL SHOWN HEREIN SHALL BE USED FOR THE METHOD OF MEASUREMENT AND PAYMENT ONLY. THERE SHALL BE NO ADDITIONAL COMPENSATION FOR ANY ADDITIONAL EXCAVATION OR BACKFILL REQUIRED FOR EXCAVATIONS TO MEET OSHA REGULATIONS.

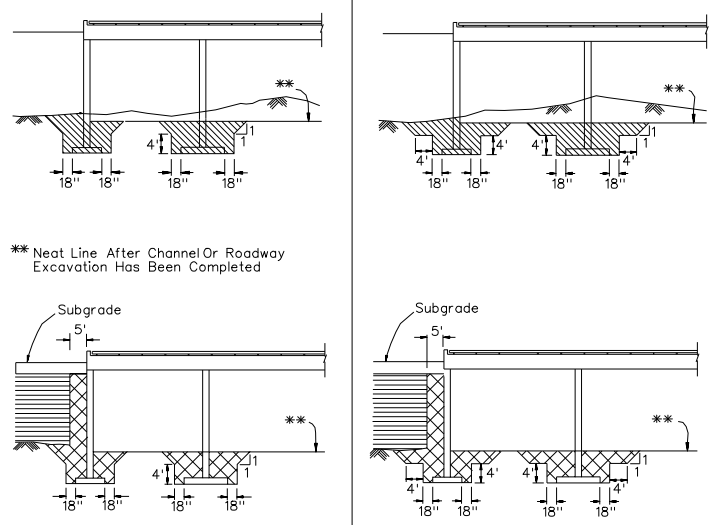

CLOSED ABUTMENT BRIDGES

Footing Width Is 6' Or Less

Footing Width Is Greater Than 6'

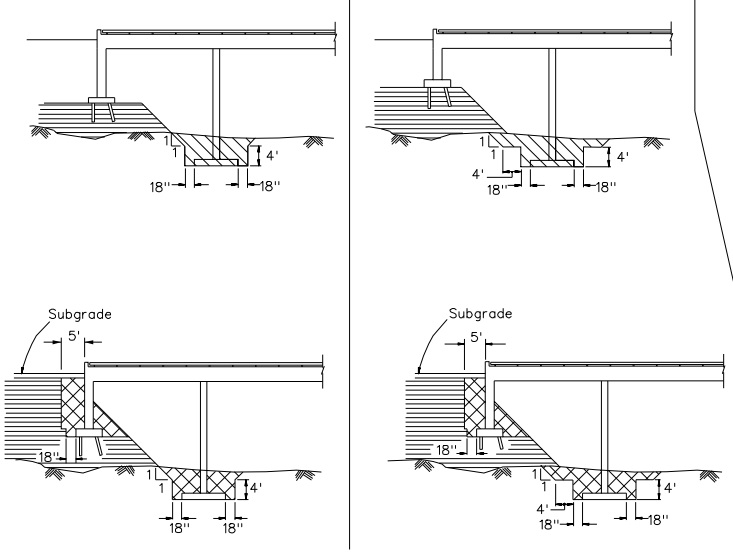

OPEN ABUTMENT BRIDGES ON PILES

Footing Width Is 6' Or Less

Footing Width Is Greater Than 6'

LEGEND:

- STRUCTURE EXCAVATION
- GRANULAR BACKFILL
- EMBANKMENT

NEVADA DEPARTMENT OF TRANSPORTATION

STRUCTURE EXCAVATION AND BACKFILL (METHOD OF MEASUREMENT)

Signed Original On File	R-1.1.3	(206,207)
CHIEF ROAD DESIGN ENGR.	ADOPTED 11/73	REVISION 5/09

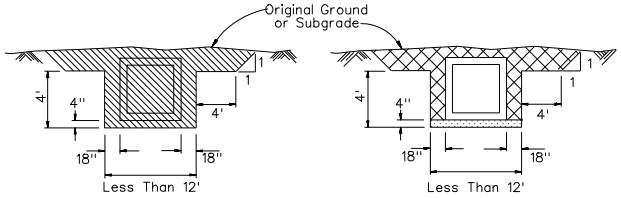

CULVERT IN EXCAVATION

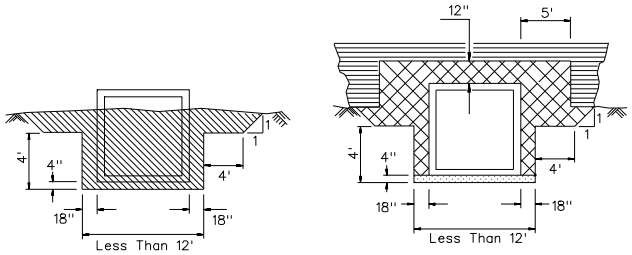

CULVERT IN EMBANKMENT

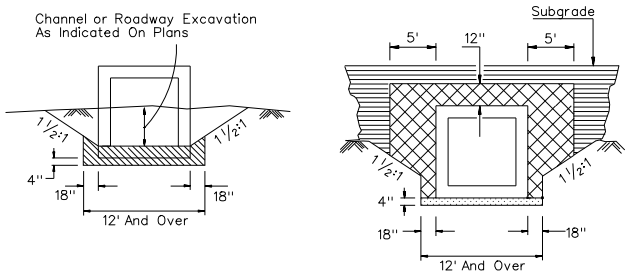

CULVERT IN EXCAVATION OR EMBANKMENT

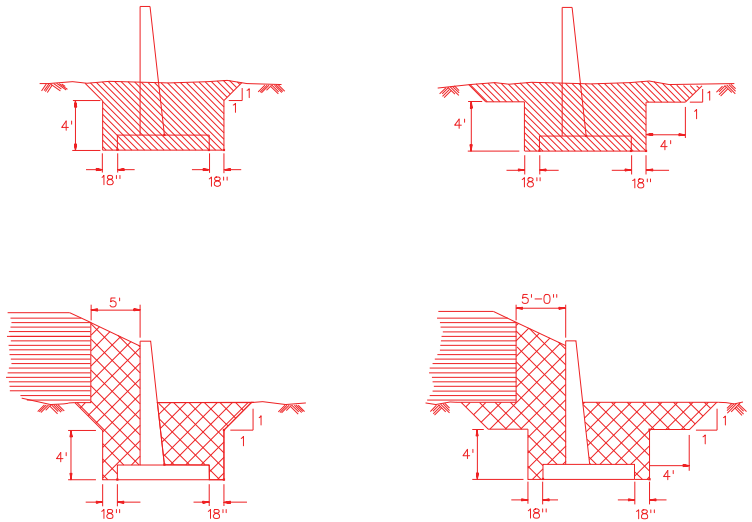

FOOTING WIDTH IS 6' OR LESS

FOOTING WIDTH IS GREATER THAN 6'

RETAINING WALLS

NOTES:

1. TRENCHES MORE THAN 4' DEEP SHALL BE SHORED, LAID BACK TO AT LEAST THE ANGLE OF REPOSE FOR EXISTING FIELD CONDITIONS, OR SOME OTHER MEANS OF PROTECTION SHALL BE PROVIDED.
2. IF HAZARDOUS FIELD CONDITIONS INDICATE GROUND MOVEMENT MAY BE EXPECTED, TRENCHES LESS THAN 4' DEEP SHALL ALSO BE PROTECTED AS INDICATED IN GENERAL NOTE 1.
3. FOR THE PURPOSE OF PAYMENT, STRUCTURE EXCAVATION AND BACKFILL QUANTITIES ARE BASED ON THESE STANDARD DRAWINGS AND NO ADDITIONAL PAYMENT WILL BE MADE FOR SHORING.
4. TRENCH EXCAVATION SHORING SHALL CONFORM TO OSHA REGULATIONS 29 CFR PART 1926, SUBPART P, APPENDIX C.
5. THE QUANTITY OF STRUCTURE EXCAVATION AND BACKFILL MEASURED FOR PAYMENT SHALL BE THE NUMBER OF CUBIC YARDS CALCULATED MINUS ANY DUPLICATION OF LIMITS WHICH OVERLAP.
6. THE LIMITS OF STRUCTURE EXCAVATION AND BACKFILL SHOWN HEREIN SHALL BE USED FOR THE METHOD OF MEASUREMENT AND PAYMENT ONLY. THERE SHALL BE NO ADDITIONAL COMPENSATION FOR ANY ADDITIONAL EXCAVATION OR BACKFILL REQUIRED FOR EXCAVATIONS TO MEET OSHA REGULATIONS.
7. BEDDING MATERIAL SHALL BE GRANULAR BACKFILL OR TYPE 2 CLASS B AGGREGATE MEETING THE RESISTIVITY REQUIREMENTS FOR GRANULAR BACKFILL. BEDDING MATERIAL WILL BE PAID FOR AS GRANULAR BACKFILL.

LEGEND:

- STRUCTURE EXCAVATION
- GRANULAR BACKFILL
- EMBANKMENT
- BEDDING

NEVADA DEPARTMENT OF TRANSPORTATION

STRUCTURE EXCAVATION AND BACKFILL (METHOD OF MEASUREMENT)

Signed Original On File	R-1.1.4		(206,207)
CHIEF ROAD DESIGN ENGR.	ADOPTED 11/73	REVISION 5/09	

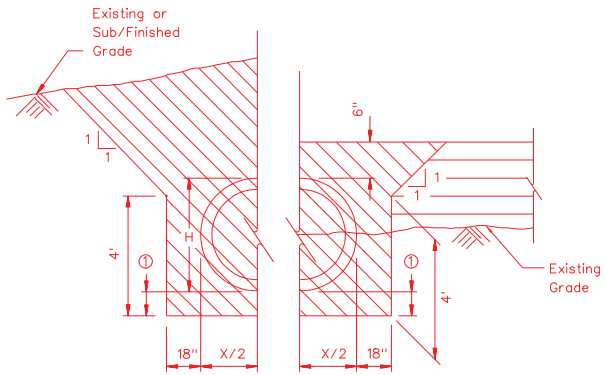

IN EXCAVATION IN EMBANKMENT

EXCAVATION

① – Varies Per Bedding Class

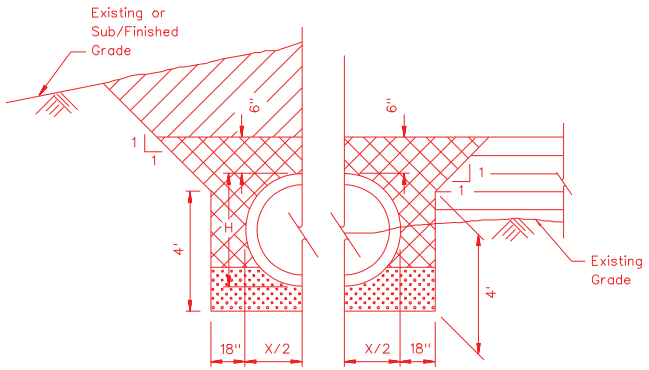

IN EXCAVATION IN EMBANKMENT

BACKFILL

X = Diameter For CMP
X = Span For CMAP
X = Outside Dimension For RCP or HDPE

H EQUALS 6 FEET OR LESS

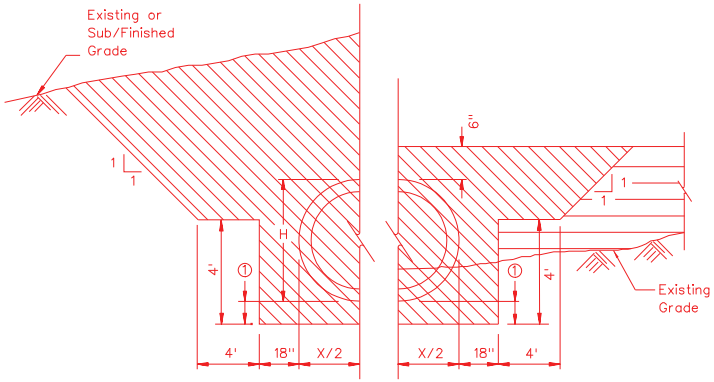

IN EXCAVATION IN EMBANKMENT

EXCAVATION

① – Varies Per Bedding Class

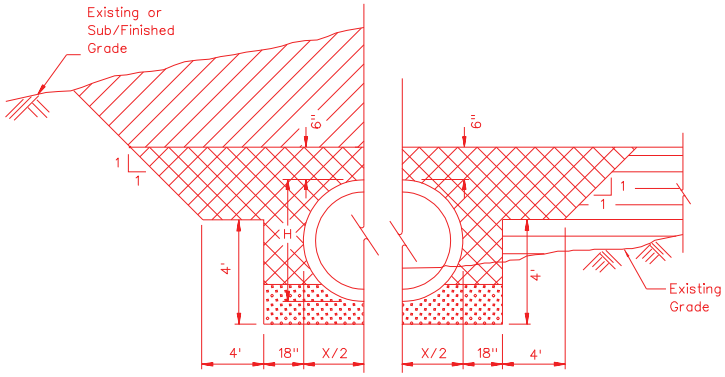

IN EXCAVATION IN EMBANKMENT

BACKFILL

X = Diameter For CMP
X = Span For CMAP
X = Outside Dimension For RCP or HDPE

H EQUALS GREATER THAN 6 FEET

LEGEND:

- STRUCTURE EXCAVATION
- GRANULAR BACKFILL
- ROADWAY EMBANKMENT
- BACKFILL
- BEDDING (See Sheet R-1.1.6)

NOTES:

1. TRENCHES MORE THAN 4' DEEP SHALL BE SHORED, LAID BACK TO AT LEAST THE ANGLE OF REPOSE FOR EXISTING FIELD CONDITIONS, OR SOME OTHER MEANS OF PROTECTION SHALL BE PROVIDED.
2. IF HAZARDOUS FIELD CONDITIONS INDICATE GROUND MOVEMENT MAY BE EXPECTED, TRENCHES LESS THAN 4' DEEP SHALL BE PROTECTED AS INDICATED IN NOTE 1.
3. FOR PURPOSES OF PAYMENT, STRUCTURE EXCAVATION AND BACKFILL QUANTITIES ARE BASED ON THESE STANDARD DRAWINGS MINUS ANY DUPLICATION IN QUANTITIES WHICH OVERLAP. IF SHORING IS USED, PAYMENT WILL BE MADE FOR THE STRUCTURE EXCAVATION AND BACKFILL BASED ON THESE STANDARD DRAWINGS AND NO ADDITIONAL PAYMENT WILL BE MADE FOR SHORING.
4. TRENCH EXCAVATION AND SHORING SHALL CONFORM TO CURRENT OSHA REGULATIONS. PAYMENT WILL BE MADE BASED ON THESE STANDARD DRAWINGS AND THERE WILL BE NO ADDITIONAL COMPENSATION FOR ANY ADDITIONAL EXCAVATION OR BACKFILL REQUIRED FOR EXCAVATIONS TO MEET OSHA REGULATIONS.
5. GRANULAR BACKFILL SHALL BE PLACED FOR A MINIMUM DEPTH OF 6" ABOVE THE TOP OF PIPE FOR THE WIDTH OF THE TRENCH. COMPLETE THE TRENCH BACKFILL WITH BACKFILL, GRANULAR BACKFILL MAY BE USED AT NO ADDITIONAL PAYMENT.
6. PROVIDE ADEQUATE TEMPORARY COVER OVER PIPE, TO PROTECT PIPE FROM DAMAGE DURING CONSTRUCTION.
7. THE QUANTITIES FOR EXCAVATION AND BACKFILL SHALL BE CALCULATED AND PAID FROM EITHER EXISTING GRADE OR SUB/FINISHED GRADE, WHICHEVER IS LOWER.

NEVADA DEPARTMENT OF TRANSPORTATION

STRUCTURE EXCAVATION AND BACKFILL FOR PIPES (METHOD OF MEASUREMENT)

Signed Original On File	R-1.1.5 (203,206,207)	
CHIEF ROAD DESIGN ENGR.	ADOPTED 10/72	REVISION 5/09

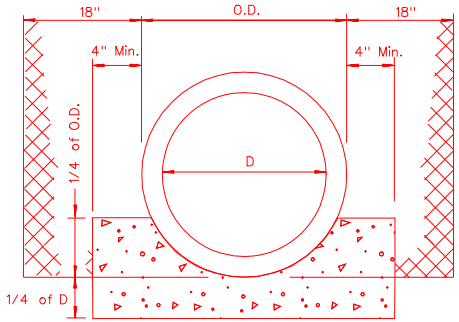

CLASS A BEDDING (RCP)

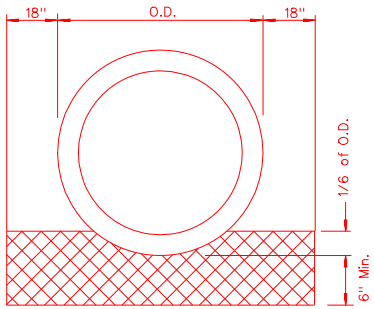

CLASS B BEDDING (RCP)

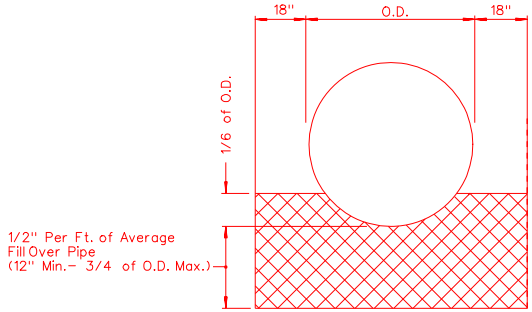

CLASS B BEDDING (CMP)

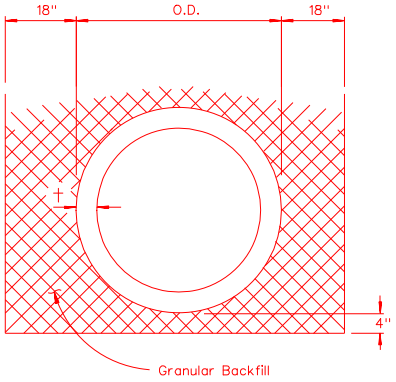

CLASS C BEDDING
(RCP AND CMP)
STANDARD HDPE BEDDING

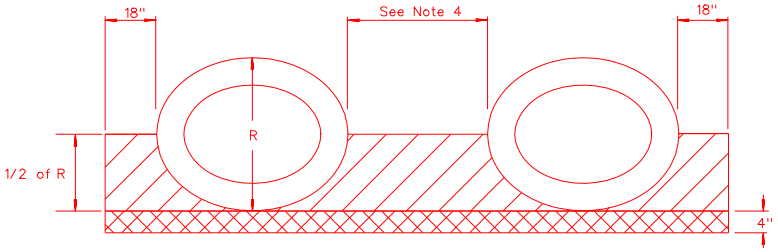

BEDDING FOR MULTIPLE OVAL RCP CULVERTS

NOTES:

1. MINIMUM DEPTHS AS SPECIFIED IN "CULVERT INSTALLATION WITH UNSUITABLE FOUNDATIONS" ON SHEET R-1.1.1, NOTES NO. 6 & 8 WILL PREVAIL WHEN THESE CONDITIONS ARE ENCOUNTERED.
2. CONCRETE SHALL BE CLASS A OR AA. ADDITIONAL EXCAVATION FOR CLASS A BEDDING TO BE INCLUDED IN THE UNIT BID PRICE PER CUBIC YARD OF CONCRETE.
3. CLASS B BEDDING SHALL BE CAREFULLY SHAPED TO FIT PIPE PRIOR TO INSTALLATION.
4. SEE SHEET R-2.1.1 OR HEADWALL DETAILS FOR APPROPRIATE PIPE SEPARATION.

LEGEND:

- GRANULAR BACKFILL
- CLASS A SLURRY BACKFILL

ALLOWABLE FILL HEIGHT
FOR REINFORCED CONCRETE PIPE

	FILL HEIGHT IN FEET						
	III		IV		V		Pipe Class
Pipe Size I.D.	A	B	A	B	A	B	Bedding Class
24"	22	14	30	18	46	29	
30"	22	14	32	20	47	30	
36"	22	14	32	20	47	31	
42"	22	14	32	21	47	31	
48"	22	14	32	21	48	31	
54"	22	14	32	21	49	31	
60"	22	14	33	21	49	31	
66"	22	14	33	22	49	31	
72"	22	15	33	22	49	32	
84"	22	15	33	22	50	32	

NEVADA DEPARTMENT OF TRANSPORTATION

CULVERT BEDDING &
ALLOWABLE FILL HEIGHT
FOR RCP

Signed Original On File	R-1.1.6	(603,604)
CHIEF HYDRAULICS ENGR.	ADOPTED 8/96	REVISION 5/09

✱ ROUND CORRUGATED STEEL PIPE 2 2/3"x1/2" CORRUGATIONS											
PIPE DIAMETER	✱✱ MIN. COVER	PLATE THICKNESS IN INCHES									
		0.064		0.079		0.109		0.138		0.168	
		R	E	R	E	R	E	R	E	R	E
INCHES	INCHES	MAX. FILL HTS. ABOVE TOP OF PIPE IN FEET									
12	12	63		83							
15	12	50		66							
18	12	42		55		84					
24	12	32		42		61		75			
30	12	25		33		49		60		74	
36	12	21		28		41		50		62	
42	12	41		44		46	72	48	76	50	80
48	12		35		38	45	63	46	67	47	70
54	12				34	43	56	44	59	45	63
60	12					42	50	43	53	44	56
66	12					41	46	42	49	43	51
72	12							41	45	42	47
78	12								43	36	44
84	12								40	31	42

R ROUND INSTALLATION
E VERTICAL ELONGATION
(SEE STANDARD SPECIFICATION SEC. 604.03.02) ✱✱✱✱

✱ CORRUGATED STEEL PIPE ARCH 5" x 1" & 3" x 1" CORRUGATIONS					
PIPE DIMENSIONS SPAN-RISE	✱✱ MIN. COVER	EQUIV. DIA.	MIN. THICKNESS	MAX. COVER IN FEET CORNER PRESSURE'S FOR IN TONS PER SQ.FT.	
INCHES	INCHES	INCHES	INCHES	2 TONS	✱✱✱ 3 TONS
60 x 46	12	54	0.064	12	18
66 x 51	12	60	0.064	12	18
73 x 55	12	66	0.064	12	18
81 x 59	12	72	0.064	12	18
87 x 63	12	78	0.064	16	22
95 x 67	18	84	0.079	15	21
103 x 71	18	90	0.079	14	20
112 x 75	18	96	0.109	13	18
117 x 79	24	102	0.109	12	17
128 x 83	24	108	0.109	11	16
137 x 87	24	114	0.109	10	15
142 x 91	24	120	0.138	9	14

EQUIVALENT GAGE NUMBERS			
GAGE NUMBER	THICKNESS IN INCHES		
	STEEL		AL.
	ZN. COAT	UNCOATED	
16	0.064	0.0598	0.060
14	0.079	0.0747	0.075
12	0.109	0.1046	0.105
10	0.138	0.1345	0.135
8	0.168	0.1644	0.164
7	0.188	0.1838	
5	0.218	0.2145	
3	0.249	0.2451	
1	0.280	0.2758	

HELICAL RIB LOCK SEAM PIPE
ALLOWABLE FILL HEIGHTS (FEET) 3/4"x 1" RIBS OF 11 1/2" PITCH

PIPE DIAMETER INCHES	16 GAGE	14 GAGE	12 GAGE
24	46	64	90
30	37	51	72
36	31	43	60
42	26	37	51
48	23	32	45
54	21	29	40
60	19	26	36
66		23	33
72		21	30
78			28
84			26
90			24

NOTE: BASED ON H-20 LOADING, MINIMUM FILL HEIGHTS IS ONE-QUARTER (1/4) OF THE DIAMETER FOR PIPE OVER FORTY-EIGHT (48) INCHES IN DIAMETER AND ONE (1) FOOT FOR ALL OTHER DIAMETERS.

MAXIMUM HEIGHT OF COVER
FOR STRUCTURAL STEEL PLATE PIPE ARCH WITH 31" CORNER RADII
6" X 2" CORRUGATIONS

SPAN	RISE	MIN. COVER INCHES	ALLOWABLE FILL HEIGHTS IN FEET							
			2 TONS/SQ.FT. BEARING PRESSURE				▲3 TONS/SQ. FT. BEARING PRESSURE			
			12 GAGE 0.109	10 GAGE 0.138	8 GAGE 0.168	7 GAGE 0.188	12 GAGE 0.109	10 GAGE 0.138	8 GAGE 0.168	7 GAGE 0.188
13'-3"	9'-4"	36	11				17			
14'-2"	9'-10"	36	11				17			
15'-4"	10'-4"	36		10				16		
16'-3"	10'-10"	36		9				16		
17'-2"	11'-4"	36		9				15		
18'-1"	11'-10"	36			8				14	
19'-3"	12'-4"	36			8				13	
19'-11"	12'-10"	36			7				13	
20'-7"	13'-2"	36			7					12

▲ MAY BE USED ONLY WHEN SUPPORTED BY FOUNDATION STUDY

MAXIMUM HEIGHT OF COVER
FOR STRUCTURAL STEEL PLATE PIPE (5% ELONGATION)
6" X 2" CORRUGATIONS

DIAMETER IN INCHES	MIN. COVER INCHES	ALLOWABLE FILL HEIGHTS IN FEET						
		12 GAGE 0.109	10 GAGE 0.138	8 GAGE 0.168	7 GAGE 0.188	5 GAGE 0.218	3 GAGE 0.249	1 GAGE 0.280
60	12	42	62	80	93			
66	12	39	57	73	85			
72	12	35	52	67	78	94		
78	12	33	48	62	72	87		
84	18	30	45	57	67	80	95	
90	18	28	42	54	62	75	88	96
96	18	27	39	50	58	70	83	90
102	24	25	37	47	55	66	78	85
108	24	24	35	45	51	63	74	80
114	24	22	33	42	49	59	70	76
120	24	21	31	40	47	56	66	72
126	24	20	30	38	45	54	63	69
132	24	19	28	37	43	51	60	66
138	24	18	27	35	41	49	58	63
144	24	18	26	34	39	47	55	60
150	24	17	25	32	38	45	53	58
156	24	16	24	31	36	44	51	56
162	24	16	23	30	35	42	49	54
168	24	15	22	29	34	40	47	52
174	24	15	22	28	32	39	46	50
180	36	14	21	27	31	38	44	48
186	36	14	20	26	30	36	43	47
192	36		20	25	29	35	42	45
198	36		19	25	29	34	40	44

MAXIMUM HEIGHT OF COVER
FOR STRUCTURAL STEEL PLATE PIPE ARCH WITH 18" CORNER RADII
6" X 2" CORRUGATIONS

SPAN	RISE	MIN. COVER INCHES	ALLOWABLE FILL HEIGHTS IN FEET							
			2 TONS/SQ.FT. BEARING PRESSURE				▲3 TONS/SQ. FT. BEARING PRESSURE			
			12 GAGE 0.109	10 GAGE 0.138	8 GAGE 0.168	7 GAGE 0.188	12 GAGE 0.109	10 GAGE 0.138	8 GAGE 0.168	7 GAGE 0.188
6'-1"	4'-7"	15								
7'	5'-1"	13								
7'-11"	5'-7"	12					16			
8'-10"	6'-1"	10					16			
9'-9"	6'-7"	9					15			
10'-11"	7'-1"	8					13			
12'-10"	8'-4"	8					11			
14'-1"	8'-9"	7					11			
15'-4"	9'-3"							10		
16'-7"	10'-1"							8		

▲ MAY BE USED ONLY WHEN SUPPORTED BY FOUNDATION STUDY

NOTE: CONTACT HYDRAULICS ENGINEER FOR MATERIALS OR SIZES NOT LISTED.

✱ RIVETED OR HELICAL FABRICATION
✱✱ TOP OF PIPE TO TOP OF FINISHED GRADE AT SHOULDER LINE FOR 2 TONS PER SQ. FT.
✱✱✱ SHALL BE USED ONLY AFTER FOUNDATION INVESTIGATION
✱✱✱✱ FOR FIELD STRUTTING C.M.P. DETAIL SEE SHEET R-2.1.1

✱ ROUND CORRUGATED STEEL PIPE 5" x 1" & 3" x 1" CORRUGATIONS FILL HEIGHTS FOR 5"x1" CORRUGATION ARE 87% OF THOSE SHOWN.											
PIPE DIAMETER	✱✱ MIN. COVER	PLATE THICKNESS IN INCHES									
		0.064		0.079		0.109		0.138		0.168	
		R	E	R	E	R	E	R	E	R	E
INCHES	INCHES	MAX. FILL HTS. ABOVE TOP OF PIPE IN FEET									
54	12	27	29	36	38	56	59	57	64	65	71
60	12	25	26	32	34	50	53	51	56	58	64
66	12	22	23	29	31	45	48	46	52	53	58
72	12	21	22	28	29	42	44	43	48	49	53
78	12	19	20	25	26	38	41	42	44	44	49
84	18			23	25	36	38	40	42	42	46
90	18			21	23	33	35	38	40	41	43
96	18					30	33	37	38	40	42
102	24					26	28	34	35	38	41
108	24					22	24	32	34	35	37
114	24					21	23	31	32	34	36
120	24					20	22	30	32	32	33
126	24							26	27	31	33
132	24							25	26	30	31
138	24							23	24	28	29
144	24									25	26

✱ CORRUGATED STEEL PIPE ARCH 2 2/3"x1/2" CORRUGATIONS					
PIPE DIMENSIONS SPAN-RISE	✱✱ MIN. COVER	EQUIV. DIA.	MIN. THICKNESS	MAX. COVER IN FEET CORNER PRESSURE'S FOR IN TONS PER SQ.FT.	
INCHES	INCHES	INCHES	INCHES	2 TONS	✱✱✱ 3 TONS
17 x 13	12	15	0.064	13	19
21 x 15	12	18	0.064	12	18
24 x 18	12	21	0.064	10	16
28 x 20	12	24	0.064	10	15
35 x 24	12	30	0.064	9	14
42 x 29	12	36	0.064	9	12
49 x 33	12	42	0.079	8	12
57 x 38	12	48	0.109	8	12
64 x 43	12	54	0.109	8	12
71 x 47	12	60	0.138	8	12
77 x 52	12	66	0.168	8	12
83 x 57	12	72	0.168	9	13

NEVADA DEPARTMENT OF TRANSPORTATION

ALLOWABLE FILL HEIGHTS FOR STEEL CULVERTS

Signed Original On File	R-1.3.1.2 (600,604,606)	
CHIEF HYDRAULICS ENGINEER	ADOPTED 7/73	REVISION 8/97

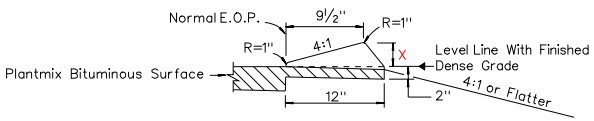

TYPE 2 SHOULDER DIKE

(0.0060 Cubic Yards Per Foot)
Application Requires Chief Roadway Design Engineer Approval

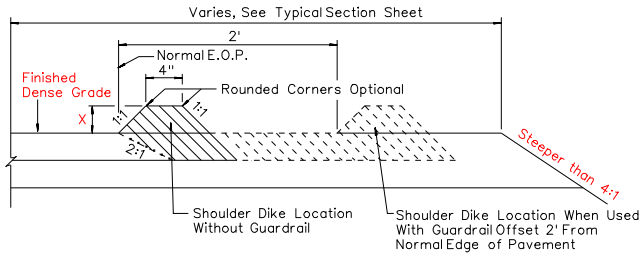

TYPE 1 SHOULDER DIKE

(Plantmix With Seal Coat)
Do Not Use Alone in Urban Areas for Design Speed Grater Than 50 m.p.h. or Rural Areas for Design Speed Grater Than 40 m.p.h.

NOTES:

1. "X" = 3" PLUS DEPTH OF OPEN GRADE.
2. PLACE SHOULDER DIKE ON DENSE GRADE SURFACE.

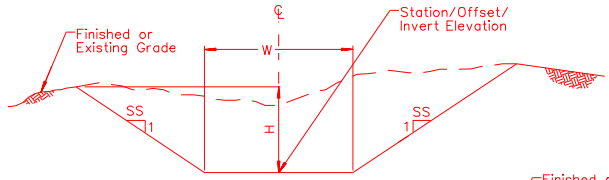

EARTHEN DITCH

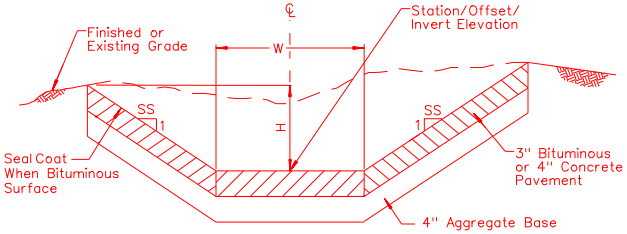

BITUMINOUS OR CONCRETE DITCH

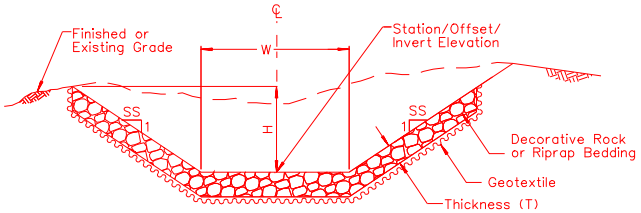

DECORATIVE ROCK OR RIP RAP BEDDING DITCH

Material as Specified in The Plans and/or Special Ppovisions

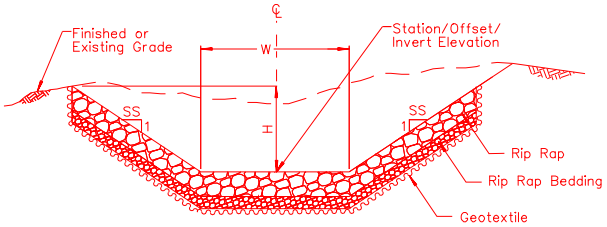

RIP RAP DITCH

Refer to Sheet R-3.1.5
For Riprap and Bedding Thickness

NOTES:

1. LOCATION OF DITCHES AS INDICATED IN THE PLANS ARE APPROXIMATE. CONSTRUCT DITCHES TO FOLLOW THE NATURAL SHAPE OF THE TERRAIN AS DIRECTED BY THE ENGINEER.
2. W, H, T & SS AS INDICATED IN THE PLANS.
3. CONSTRUCT TRIANGULAR SHAPE DITCH WHEN W=0 OR IS NOT SPECIFIED.
4. DITCH LINNING MATERIALS WILL BE PAID FOR UNDER THE APPROPRIATE SECTION OF THE SPECIFICATIONS.

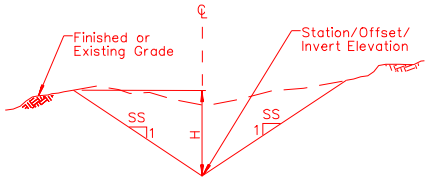

V - TYPE DITCH

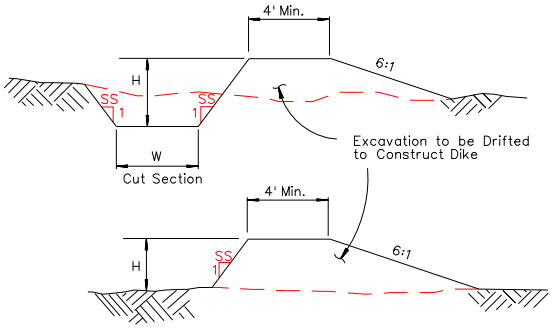

NOTES:

1. 6:1 SLOPE TO BE PLACED ON THE SIDE ADJACENT TO THE MAIN ROADWAY.
2. REFER TO DITCH DETAILS IF DITCH LINNINGS ARE SPECIFIED.
3. W, H, T, & SS AS INDICATED IN THE PLANS OR AS DIRECTED BY THE ENGINEER.

DITCH AND DIKE

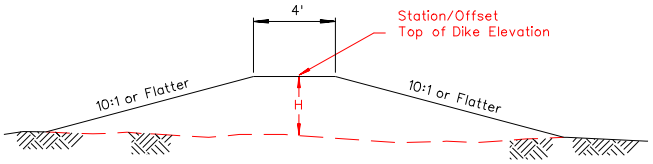

DIKE

Construct Top of Dike to Elevation or Height (H) as Indicated in The Plans

NEVADA DEPARTMENT OF TRANSPORTATION

DRAINAGE DITCHES AND DIKES

Signed Original On File	R-1.4.1	(203)
CHIEF HYDRAULICS ENGINEER	ADOPTED 8/69	REVISION 5/09

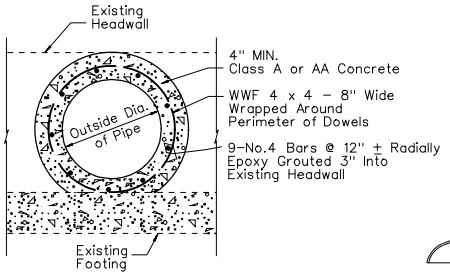

SECTION A–A

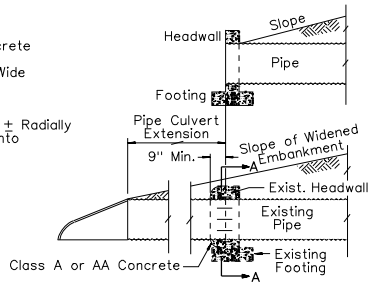

TYPE 2 MODIFIED

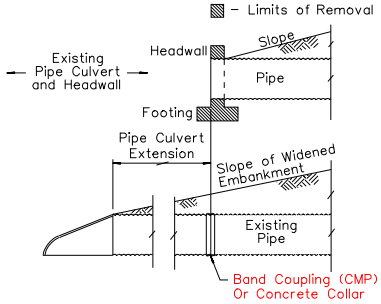

TYPE 1 MODIFIED

PIPE CULVERT EXTENSION

For Additional Information See Sheet R-1.1.2

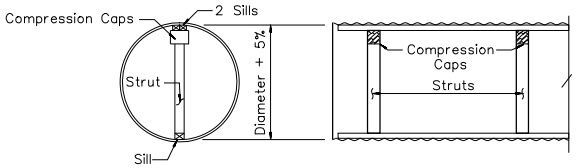

END VIEW

FIELD STRUTTING CMP

For Strut, Cap, Sill Size, and Spacing Use Manufacturers Recommendations. Struts, Caps and Sills To Be the Same Dimension. For Maximum Fill Heights, See Sheet R-1.3.1.2 Under Columns Designated "E". Struts Shall Be Left in Place Until Fill Has Been Completed and Compacted, Unless Otherwise Directed By the Engineer.

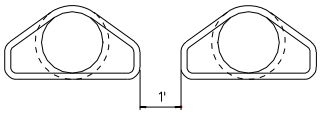

PRECAST END SECTIONS

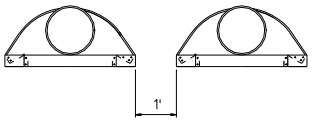

METAL END SECTIONS

MULTIPLE INSTALLATIONS WITH END SECTIONS

SEPARATION FOR MULTIPLE INSTALLATIONS WITH END SECTIONS

CMP/HDPE			CMAP			RCP		
DIA.	X	Y	SPAN	X	Y	DIA.	X	Y
			21" X 15"	5' – 2"	3' – 5"	18"	4' – 4"	2' – 6"
			24" X 18"	5' – 10"	3' – 10"	24"	5' – 5"	3'
			28" X 20"	6' – 6"	4' – 2"	30"	6' – 6"	3' – 6"
24"	6' – 8"	4' – 8"	35" X 24"	7' – 8"	4' – 9"	36"	7' – 7"	4'
30"	8'	5' – 6"	42" X 29"	9' – 3"	5' – 9"	42"	8' – 2"	4'
36"	9' – 4"	6' – 4"	49" X 33"	10' – 3"	6' – 2"	48"	8' – 9"	4'
42"	10' – 8"	7' – 2"	57" X 38"	11' – 6"	6' – 9"	54"	8' – 7"	3' – 4"
48"	11' – 6"	7' – 6"	64" X 43"	12' – 6"	7' – 2"			
54"	12' – 6"	8'	71" X 47"	13' – 6"	7' – 7"			
60"	13' – 6"	8' – 6"	77" X 52"	14' – 6"	8' – 1"			
66"	14'	8' – 6"	83" X 57"	15' – 6"	8' – 7"			
72"	14' – 6"	8' – 6"						
78"	15'	8' – 6"						
84"	15' – 6"	8' – 6"						

NOTES:

1. CONCRETE COLLAR TO BE USED FOR MAKING REPAIR CONNECTIONS, CONNECT DISSIMILAR PIPE MATERIALS, EXTEND OR CONNECT SIMILAR PIPE MATERIALS WHERE BELL AND SPIGOT CONNECTIONS AREN'T POSSIBLE, AND WHERE SPECIFIED.
2. MAINTAIN PROPER ALIGNMENT, LINE, AND GRADE ACROSS THE JOINT. SECURE PIPE SECTIONS ADEQUATELY ON EACH SIDE OF JOINT PRIOR TO CASTING CONCRETE TO PREVENT ANY INADVERTENT DISPLACEMENT OR MISALIGNMENT.
3. IN LIEU OF A GEOTEXTILE WRAP, RUBBER BOOT ADAPTERS, COUPLING BANDS, OR OTHER SPECIAL ADAPTERS SPECIFIC TO THE APPLICATION AND AS RECOMMENDED BY THE MANUFACTURER MAY BE USED TO FACILITATE CONSTRUCTION AND MAINTAIN JOINT INTEGRITY. USE APPROPRIATE CONNECTION DEVICES IF REQUIRED BY THE ENGINEER OR SPECIAL PROVISIONS TO PROVIDE A COMPETENT OR WATER TIGHT CONNECTION. MAINTAIN A MINIMUM OF 6 INCHES OF CONCRETE COVER ON THE OUTSIDE OF ANY SPECIAL CONNECTION DEVICES.
4. FOR HDPE PIPE, USE AN EMBEDDED WATERSTOP GASKET ON EACH SIDE OF THE JOINT WHERE WATER TIGHT CONNECTIONS ARE REQUIRED AND WHERE REQUIRED BY THE ENGINEER.
5. NO DIRECT PAYMENT FOR CONCRETE COLLARS OR ASSOCIATED CONNECTION DEVICES. PAYMENT TO BE INCLUDED IN THE PAYMENT FOR PIPE.
6. WHERE ANGLE BENDS ARE SPECIFIED, MITER PIPE ENDS TO PROVIDE A TIGHT JOINT CONNECTION WITH A MAXIMUM 1" GAP TOLERANCE.
7. PROVIDE A MINIMUM OF 1" CONCRETE COVER FROM COLLAR ENDS AND 2" MINIMUM CLEARANCE FROM INNER TO OUTER SURFACE OF CONCRETE COLLAR.

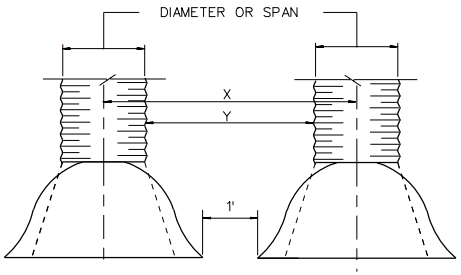

When Y Distance Exceeds 5', Structure Excavation and Backfill Quantities Shall Be Calculated For Each Culvert.

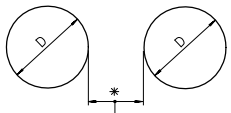

DIAMETER	MINIMUM SPACE BETWEEN PIPES
12" to 24"	1'
30" to 66"	ONE HALF DIAMETER OF PIPE
72" to 84"	3'

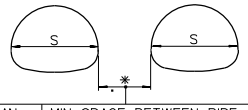

SPAN	MIN. SPACE BETWEEN PIPE ARCHES
17" to 35"	1'
42" to 83"	One Third Span of Pipe Arch

*When Headwalls Are Used or Anticipated For Future Use, Space As Per Headwalls Standard.

MULTIPLE INSTALLATIONS WITHOUT HEADWALLS

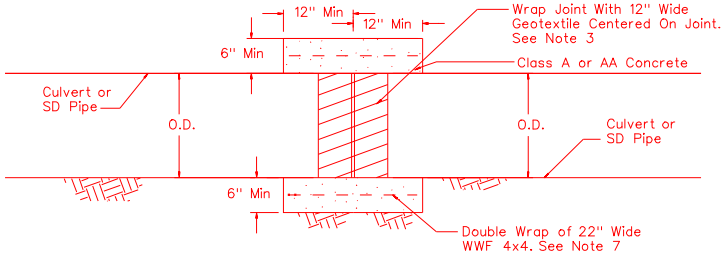

CONCRETE COLLAR

NEVADA DEPARTMENT OF TRANSPORTATION

CULVERT INSTALLATION

Signed Original On File	R-2.1.1	(601-606)
CHIEF HYDRAULICS ENGINEER	ADOPTED 8/69	REVISION 5/09

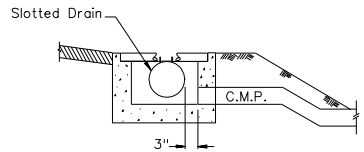

EMBANKMENT PROTECTOR & SLOTTED DRAIN

For Details Not Shown See R-3.1.2 and R-3.1.3.

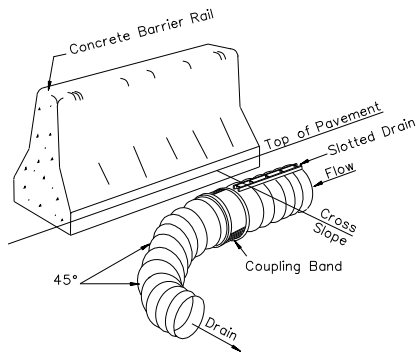

SLOTTED DRAIN & CONCRETE BARRIER RAIL (CAN BE USED WITH SHOULDER DIKE)

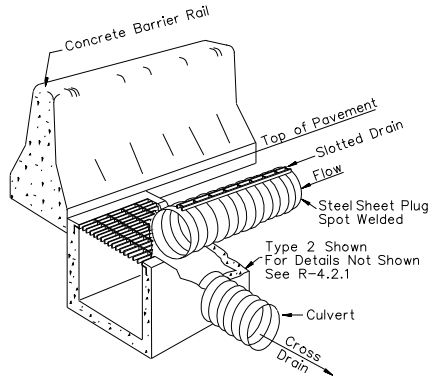

SLOTTED DRAIN, CONCRETE BARRIER RAIL, & DROP INLET

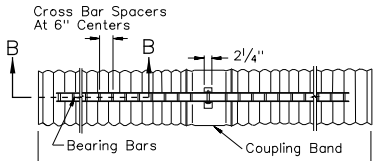

PLAN VIEW

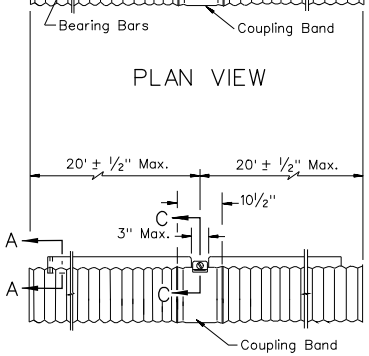

ELEVATION VIEW

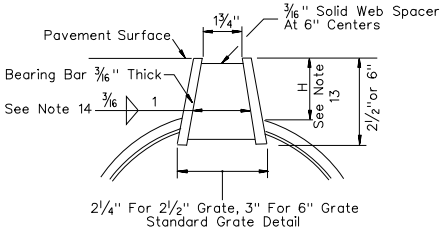

SECTION A-A

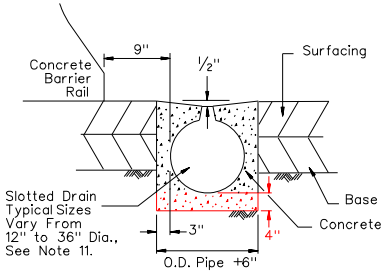

BEDDING DETAIL

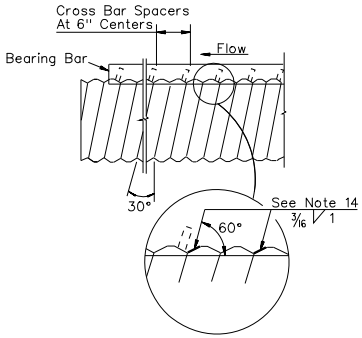

SECTION B-B

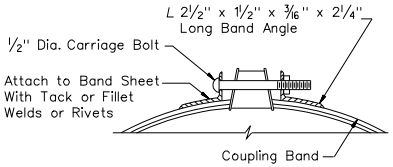

SECTION C-C

NOTES:

1. DRAIN PIPE SEAMS MAY BE CONTINUOUS HELICAL LOCK SEAM OR HELICAL WELD SEAM.
2. DRAIN SECTIONS SHALL BE ASSEMBLED WITH THE COUPLING BAND SHOWN.
3. THE CROSS BAR SPACER SHALL BE WELDED TO THE BEARING BARS IN SUCH A MANNER AS TO TO DEVELOP A MINIMUM TENSILE STRENGTH OF 12,000 LBS. NORMAL TO THE LONGITUDINAL AXIS OF THE BEARING BARS.
4. THE MAXIMUM VARIANCE FROM A STRAIGHT LINE BETWEEN THE EXTREME TOP CORNERS OF THE BEARING BARS SHALL BE ½" IN 20'.
5. FOR CONTINUOUS RUNS OF S.C.M.P. IN EXCESS OF 200', CLEANOUT DI OR STANDARD FLUSHING INLETS SHALL BE INSTALLED AS SHOWN ON THE PLANS.
6. SPOT WELD SHALL DEVELOP MINIMUM REQUIRED STRENGTH OF STRAP.
7. DIMENSIONS SHOWN ARE MINIMUMS.
8. CONTRACTOR TO PROVIDE AN ADEQUATE METHOD OF KEEPING THE A.C. OUT OF PIPE DURING PAVING OPERATIONS.
9. DESIGN SHALL BE IN ACCORDANCE WITH THE LATEST EDITION OF THE AASHTO STANDARD SPECIFICATIONS FOR HIGHWAY BRIDGES, SECTION 12. MINIMUM LIVE LOAD TO BE H20.
10. CONCRETE SHALL BE CLASS A OR AA.
11. HYDRAULICS ENGINEER WILL STATE PIPE SIZE.
12. THE SPACER PLATES SHALL BE WELDED ON BOTH SIDES TO EACH BEARING BAR WITH FOUR 1¼" LONG 3/16" FILLET WELDS.
13. H = HEIGHT OF BEARING BAR (2½" OR 6") − ½" CORRUGATION − GAGE OF PIPE IN INCHES.
14. THE GRATE SHALL BE WELDED WITH A 3/16" FILLET WELD MINIMUM 1" LONG TO THE CORRUGATED STEEL PIPE ON EACH SIDE OF THE GRATE AT EVERY OTHER CORRUGATION.

NEVADA DEPARTMENT OF TRANSPORTATION

SLOTTED C.M.P. DRAIN DETAILS

Signed Original On File	R-2.1.3	(604)
CHIEF HYDRAULICS ENGINEER	ADOPTED 6/72	REVISION 5/09

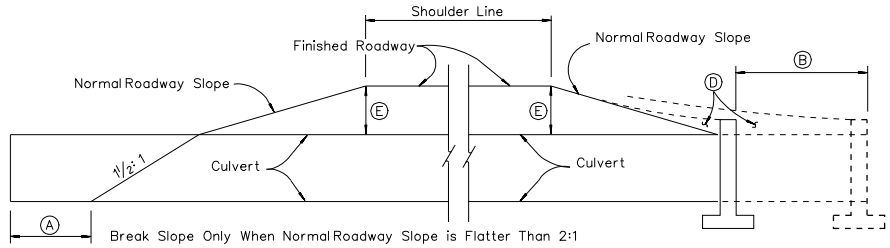

WITHOUT HEADWALL

WITH CONCRETE HEADWALL

(A) Length of Culvert Shall Be Increased As Follows: Consider Each Side Separately. Measure Pipe From Roadbed Centerline to the Intersection of Pipe Flow Line and Fillslope. To This Dimension Add 2' When Cover At Shoulder is 1' to 10' Add An Additional 6" For Each Succeeding 5' Of Cover or Portion Thereof.

(B) Length of Culverts Shall Be Increased As Follows: Consider Each Side Separately. Measure Pipe From Roadway Centerline to the Intersection of the Top of Pipe and Fillslope Plus Headwall Thickness. To This Dimension Add 1' When Cover At Shoulder is 5' to 10', Add An Additional 6" For Each Succeeding 5' of Cover or Portion Thereof.

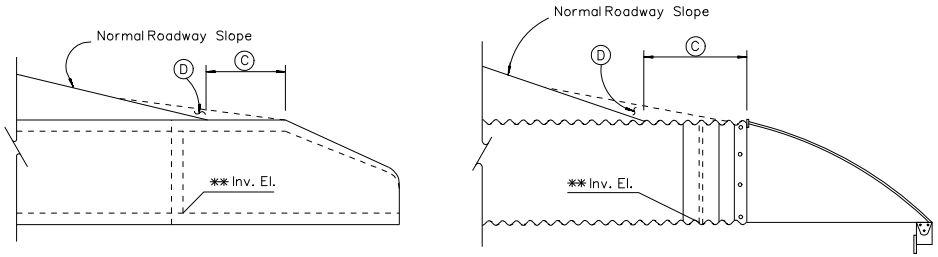

PRECAST CONCRETE END SECTION

METAL END SECTION

(C) Length of Culvert Shall Be Increased As Follows: Consider Each Side Separately. Measure Pipe From Roadway Centerline to the Intersection of the Top of Pipe and Fillslope. To This Dimension Add 1' When Cover At Shoulder is 1' to 10' Add An Additional 6" For Each Succeeding 5' or Portion Thereof.

(D) Contour This Area To Provide the Minimum Amount of Obstruction Exposure.

(E) When Less Than 1' 6" Make Modifications As Determined By The Engineer.

** For Informational Purposes Only

MINIMUM CULVERT INSTALLATION

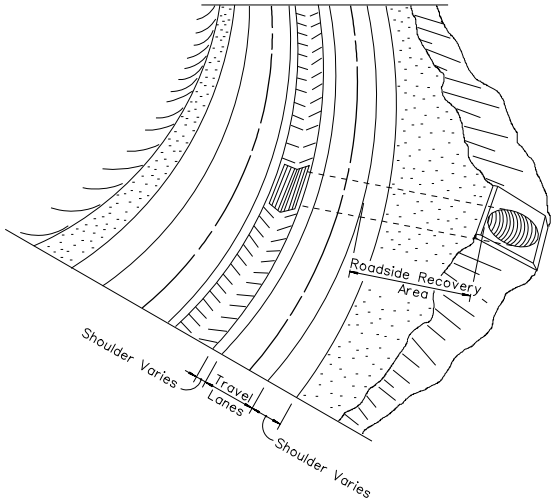

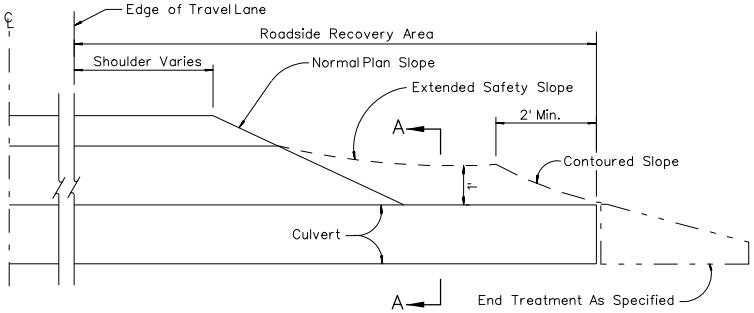

METHOD OF CONTOURING OVER CULVERTS

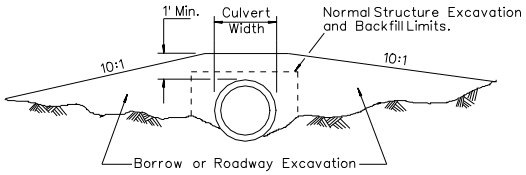

SECTION A-A
SAFETY CULVERT INSTALLATION
To Provide Obstruction Clearance

NOTE:
If, After Extending the Culvert and/or Warping the Fillslope For Safety and/or Aesthetics, the Extension Does Not Fulfill the Requirements For a Clear Roadside Recovery Area, Then Vehicular Traffic May Be Protected By Some Other Means, Such As Guardrail, Barrier Rail or Another Acceptable Safety Feature.

NEVADA DEPARTMENT OF TRANSPORTATION

CULVERT INSTALLATION

Signed Original On File	R-2.1.4	(601-606)
CHIEF HYDRAULICS ENGINEER	ADOPTED 6/72	REVISION 5/09

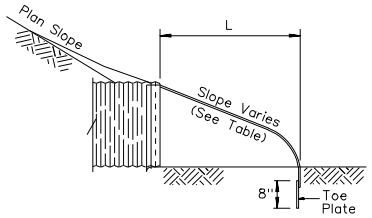

SECTION
TYPE 1 OR 2 CONNECTION

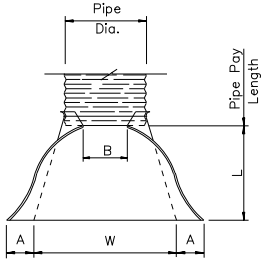

PLAN

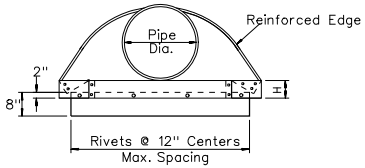

ELEVATION

Length of Toe Plate To Be W + 10" Min. For 12" to 30" Dia. Pipe Inclusive and W +22" Min. For 36" Diameter Pipes and Larger.

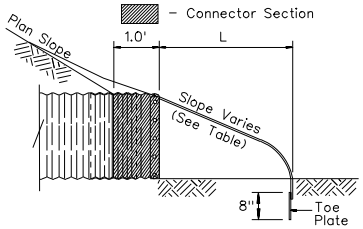

SECTION
TYPE 3 CONNECTION

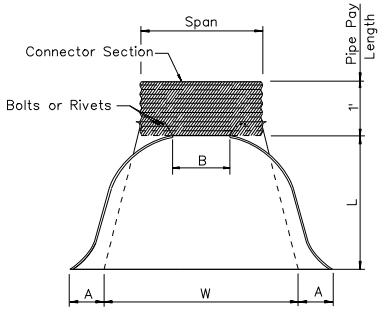

PLAN

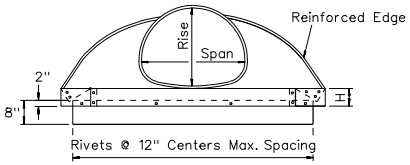

ELEVATION

Length of Toe Plate To Be W + 10" Min. For Pipe Arches With Rise of 13" to 29" Inclusive and W + 18" Min. For Pipe Arches With Rise of 33" and Larger.

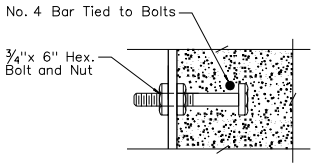

DETAIL B

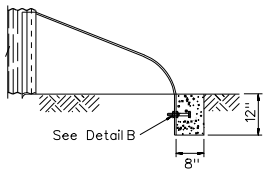

SECTION

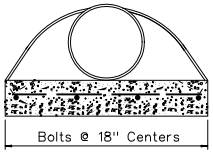

ELEVATION
ANCHOR BLOCK DETAIL
See Notes 6 Thru 9

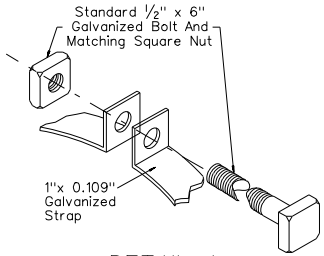

DETAIL A

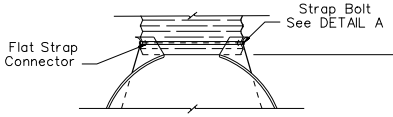

TYPE 1
For 12" Thru 24" CMP Only

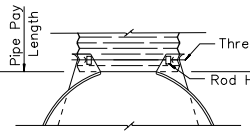

TYPE 2
For 30" Thru 84" CMP,
17" x 13" Thru 57" x 38" CMAP, and
12" Thru 60" HDPE

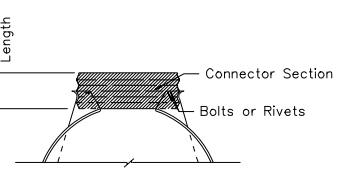

TYPE 3
For 64" x 43" Thru 83" x 57" CMAP or
42" Thru 84" CMP (Optional)

STANDARD CONNECTIONS

SHEET 1 OF 2

NEVADA DEPARTMENT OF TRANSPORTATION

METAL END SECTIONS
12" TO 84" CMP/
12" TO 60" HDPE &
17"x 13" TO 83"x 57" CMAP

Signed Original On File	R-2.2.1	(604)
CHIEF HYDRAULICS ENGINEER	ADOPTED 8/75	REVISION 5/09

TYPE CONNECTION	PIPE ARCH DIMENSIONS		GAGE	DIMENSIONS					APPROX. SLOPE	*CONCRETE CU. YD.
	SPAN	RISE		A 1" TOL.	B MAX	H 1" TOL.	L 1½" TOL.	W 2" TOL.		
TYPE 2	17"	13"	16	7"	9"	6"	19"	30"	2½: 1	
	21"	15"	16	7"	10"	6"	23"	36'	2½: 1	
	24"	18"	16	8"	12'	6"	28"	42"	2½: 1	
	28"	20"	16	9"	14"	6"	32"	48"	2½: 1	
	35"	24"	14	10"	16"	6"	39"	60"	2½: 1	
	42"	29"	14	12"	18"	8"	46"	75"	2½: 1	
	49"	33"	12	13"	21"	9"	53"	85"	2½: 1	
	57"	38"	12	18"	26"	12"	63"	90"	2½: 1	0.26
TYPE 3	64"	43"	12	18"	30"	12"	70"	102"	2¼: 1	0.29
	71"	47"	12	18"	33"	12"	77"	114"	2¼: 1	0.31
	77"	52"	12	18"	36"	12"	77"	126"	2 : 1	0.34
	83"	57"	12	18"	39"	12"	77"	138"	2 : 1	0.36

TYPE CONNECTION	CMP/ HDPE PIPE DIAM.	GAGE	DIMENSIONS					APPROX. SLOPE	*CONCRETE CU. YD.
			A 1" TOL.	B MAX	H 1" TOL.	L 1½" TOL.	W 2" TOL.		
TYPE 1 CMP/ TYPE 2 HDPE	12"	16	6"	6"	6"	21"	24"	2½: 1	
	15"	16	7"	8"	6"	26"	30"	2½: 1	
	18"	16	8"	10"	6"	31"	36'	2½: 1	
	21"	16	9"	12"	6"	36"	42"	2½: 1	
	24"	16	10"	13"	6"	41"	48"	2½: 1	
TYPE 2	30"	14	12"	16"	8"	51"	60"	2½: 1	
	36"	14	14"	19"	9"	60"	72"	2½: 1	
TYPE 2 OR TYPE 3	42"	12	16"	22"	11"	69"	84"	2½: 1	
	48"	12	18"	27"	12"	78"	90"	2¼: 1	0.26
	54"	12	18"	30"	12"	84"	102"	2 : 1	0.29
	60"	12	18"	33"	12"	87"	114"	1¾: 1	0.31
	66"	12	18"	36"	12"	87"	120"	1½: 1	0.32
	72"	12	18"	39'	12"	87"	126"	1 1/3 : 1	0.34
	78"	12	18"	42"	12"	87"	132"	1¼: 1	0.35
	84"	12	18"	45"	12"	87"	138"	1 1/6 : 1	0.36

* FOR INFORMATION ONLY

NOTES:

1. THE CULVERT LENGTHS SHOWN ON THE PLANS AND STRUCTURE LIST SHALL BE THE PAY LENGTH AS INDICATED ON THE STANDARD SHEET INCLUDING CONNECTOR SECTION LENGTHS WHEN USED.
2. PIPE ON SKEW SHALL BE MITERED. SUFFICIENT ADDITIONAL LENGTH OF PIPE SHALL BE ALLOWED TO PROVIDE CLEARANCE FOR END SECTIONS.
3. TOE PLATES REQUIRED ON ROUND PIPE 24" AND OVER IN DIAMETER AND ON ARCH PIPE 28"x 20" AND OVER UNLESS OTHERWISE SPECIFIED ON THE PLANS OR IN THE SPECIAL PROVISIONS.
4. TOE PLATES SHALL BE PUNCHED WITH 7/16" HOLES TO MATCH HOLES IN LIP OF END SECTION AND BOLTED WITH ⅜" GALVANIZED BOLTS.
5. REINFORCED EDGES TO BE SUPPLEMENTED WITH GALVANIZED STIFFENER ANGLES FOR THE 60" THRU 84" ROUND, 77"x 52" AND 83"x 57" PIPE-ARCH SIZES. THE ANGLES WILL BE 2"x 2"x ¼" FOR THE 60" THRU 72" ROUND, 77"x 52" AND 83"x 57" PIPE ARCH SIZES AND 2½" x 2½" x ¼" FOR 78" THRU 84" ROUND. THE ANGLES TO BE ATTACHED BY ⅜" GALVANIZED NUTS AND BOLTS.
6. ANCHOR BLOCK SHALL BE USED ON INLET END ONLY FOR 48" CMP AND OVER AND FOR 57"x 38" CMAP AND OVER UNLESS OTHERWISE SPECIFIED (SEE ANCHOR BLOCK DETAILS).
7. CONCRETE SHALL BE CLASS A OR AA.
8. TOE PLATE TO BE ELIMINATED WHEN ANCHOR BLOCK IS USED.
9. REINFORCING STEEL BAR TO CLEAR 2" ON ENDS OF CONCRETE ANCHOR BLOCK.
10. ACTUAL DIMENSIONS OF END SECTION MAY VARY BY MANUFACTURER. PROVIDE APPROPRIATE METAL END SECTIONS TO SPECIFICALLY FIT EITHER HDPE OR CMP AS RECOMMENDED BY THE MANUFACTURER.
11. METAL END SECTIONS INSTALLED ON HDPE PIPE SHALL ENGAGE 2 CORRUGATIONS.

SHEET 2 OF 2

NEVADA DEPARTMENT OF TRANSPORTATION

METAL END SECTIONS
12" TO 84" CMP/
12" TO 60" HDPE &
17"x 13" TO 83"x 57" CMAP

Signed Original On File	R-2.2.1.1	(604)
CHIEF HYDRAULICS ENGINEER	ADOPTED 8/75	REVISION 5/09

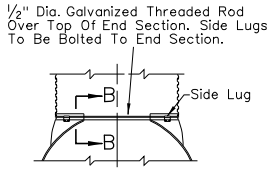

TYPE 2
CONNECTOR DETAIL

For 30" Dia. And Larger
21" x 15" And Larger

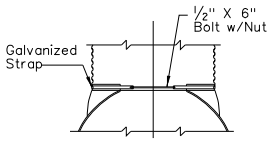

TYPE 1
CONNECTOR DETAIL

Through 24" Round CMP

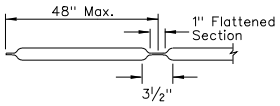

LONGITUDINAL BARS

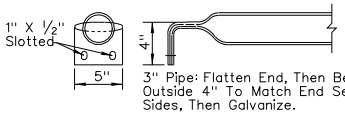

TRANSVERSE BAR
DETAIL

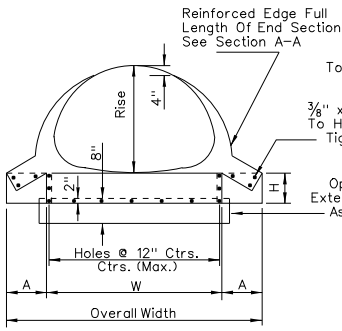

FRONT VIEW

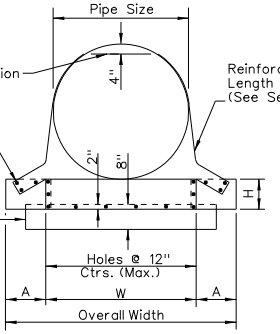

FRONT VIEW

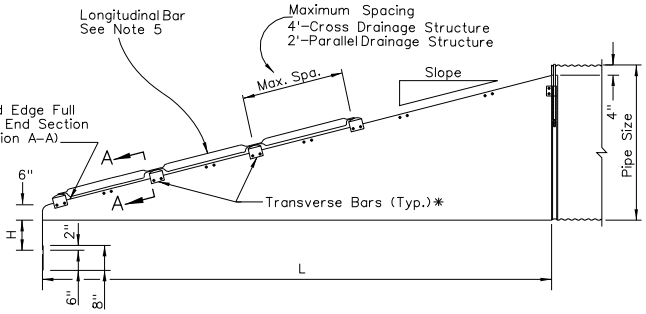

ELEVATION

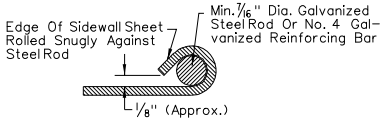

SECTION A–A

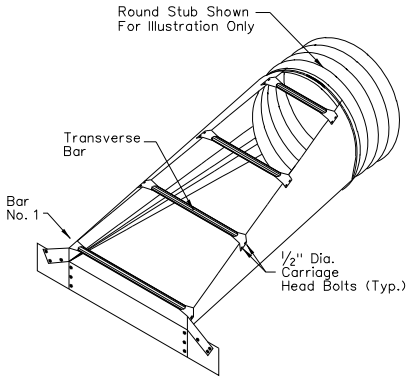

PARALLEL
DRAINAGE STRUCTURE

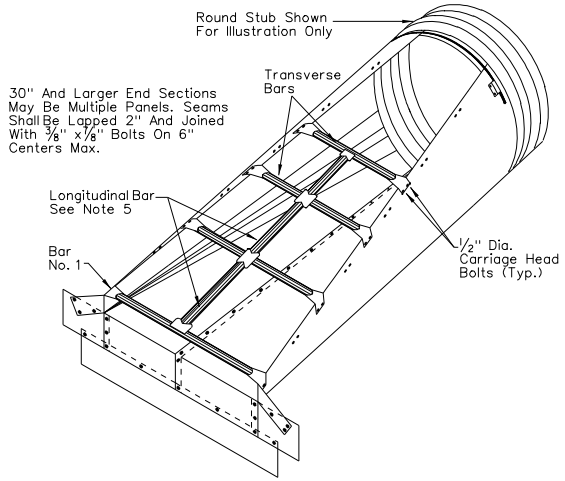

CROSS DRAINAGE STRUCTURE

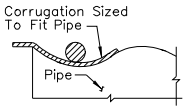

SECTION B–B

LEGEND:

* NUMBER OF BARS REQUIRED WILL VARY DEPENDING ON THE LENGTH OF THE END SECTION. BAR NO. 1 IS ALWAYS LOCATED 6" ABOVE FLOW LINE.

SHEET 1 OF 2

NEVADA DEPARTMENT OF TRANSPORTATION

METAL END SECTION
(SAFETY TYPE)
FOR METAL PIPES

Signed Original On File	R-2.2.2	(604)
CHIEF HYDRAULICS ENGINEER	ADOPTED 9/00	REVISION 5/09

SAFETY SLOPE END SECTIONS FOR ROUND PIPES												
Pipe Dia. in.	Min. Thick. in.	Ga.	Dimensions +/- 2" A	H	W	Overall Width	L Dimensions +/- 2" Slope	Length in.	Slope	Length in.	Slope	Length in.
15	.064	16	8	6	21	37	4:1	20	6:1	30	10:1	50
18	.064	16	8	6	24	40	4:1	32	6:1	48	10:1	80
21	.064	16	8	6	27	43	4:1	44	6:1	66	10:1	110
24	.064	16	8	6	30	46	4:1	56	6:1	84	10:1	140
30	.109	12	12	9	36	60	4:1	80	6:1	120	10:1	200
36	.109	12	12	9	42	66	4:1	104	6:1	156	10:1	260
42	.109	12	16	12	48	80	4:1	128	6:1	192	—	—
48	.109	12	16	12	54	86	4:1	152	6:1	228	—	—
54	.109	12	16	12	60	92	4:1	176	6:1	264	—	—
60	.109	12	16	12	66	98	4:1	200	6:1	300	—	—

SAFETY SLOPE END SECTIONS FOR ARCHED PIPES														
Equiv. Dia. in.	Inches Span	Rise	Min. Thick in.	Ga.	Dimensions +/- 2" A	H	W	Overall Width	L Dimensions +/- 2" Slope	Length in.	Slope	Length in.	Slope	Length in.
18	21	15	.064	16	8	6	27	43	4:1	20	6:1	30	10:1	50
21	24	18	.064	16	8	6	30	46	4:1	32	6:1	48	10:1	80
24	28	20	.064	16	8	6	34	50	4:1	40	6:1	60	10:1	100
30	35	24	.079	14	12	9	41	65	4:1	56	6:1	84	10:1	140
36	42	29	.109	12	12	9	48	72	4:1	76	6:1	114	10:1	190
42	49	32	.109	12	16	12	55	87	4:1	92	6:1	138	—	—
48	57	37	.109	12	16	12	63	95	4:1	112	6:1	168	—	—
54	64	42	.109	12	16	12	70	102	4:1	132	6:1	198	—	—
60	71	46	.109	12	16	12	77	109	4:1	148	6:1	222	—	—
72	83	56	.109	12	16	12	89	121	4:1	188	6:1	282	—	—

NOTES:

1. GALVANIZED STEEL SHALL MEET A.A.S.H.T.O. SPECIFICATIONS.
2. CONNECTOR SIZES THRU 24" DIAMETER ATTACH TO PIPE WITH TYPE 1 STRAPS. ALL OTHER SIZES ATTACH WITH TYPE 2 RODS AND LUGS.
3. WHEN REQUIRED, TOE PLATE EXTENSIONS ARE TO BE 8" HIGH BY OVERALL WIDTH LESS 6". DO NOT INCLUDE UNLESS SPECIFIED.
4. FABRICATE TRANSVERSE BARS AND LONGITUDINAL BARS FROM STEEL PIPE CONFORMING TO ASTM A53 GRADE B SCHEDULE 40 SPECIFICATIONS HOT DIP GALVANIZE BARS AFTER FABRICATION. SLOTTED HOLES FOR TRANSVERSE BAR ATTACHMENT SHALL BE PROVIDED FOR ALL END SECTIONS.
5. LONGITUDINAL BARS SHOWN ARE FOR CROSS DRAINAGE STRUCTURES FOR PIPES LARGER THAN 30". LONGITUDINAL BAR REQUIRED WHERE OPEN SPAN (AS MEASURED PERPENDICULAR TO THE FLOW LINE) IS GREATER THAN 30". USE ADDITIONAL LONGITUDINAL BARS IF AFTER PLACEMENT OF ONE LONGITUDINAL BAR THE OPEN SPACING STILL EXCEEDS 30" ON LARGER END SECTIONS. WHERE THE OPEN SPAN OF ANY CROSS DRAINAGE STRUCTURE IS 30" OR SMALLER, NO BARS ARE REQUIRED. WELD LONGITUDINAL BARS TO TRANSVERSE BARS.
6. ALL REFERENCES MADE TO PIPE DIAMETER APPLY TO ROUND PIPE DIAMETERS AND THEIR ARCHED EQUIVALENTS.

SHEET 2 OF 2

NEVADA DEPARTMENT OF TRANSPORTATION

METAL END SECTION
(SAFETY TYPE)
FOR METAL PIPES

Signed Original On File	R-2.2.2.1 (604)	
CHIEF HYDRAULICS ENGINEER	ADOPTED 9/00	REVISION 5/09

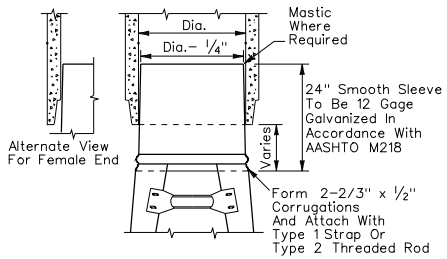

TAPERED SLEEVE FOR ATTACHING STEEL END SECTIONS TO RCP & HDPE

For All Concrete Pipes

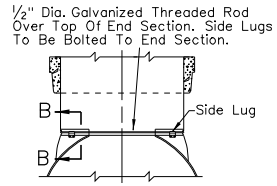

TYPE 2 CONNECTOR DETAIL

For 30" And Larger Round & Elliptical RCP/HDPE

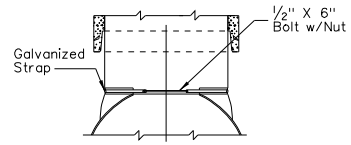

TYPE 1 CONNECTOR DETAIL

Through 24", Round & Elliptical RCP/HDPE

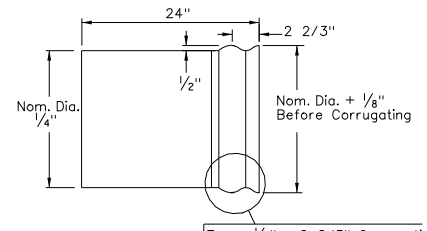

SMOOTH TAPERED SLEEVE DETAIL

Form 1/2" x 2 2/3" Corrugations. Maintain Inside Diameter Of Sleeve. Finished End To Be The Same Diameter As Corrugated Steel Pipe Diameter.

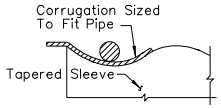

SECTION B–B

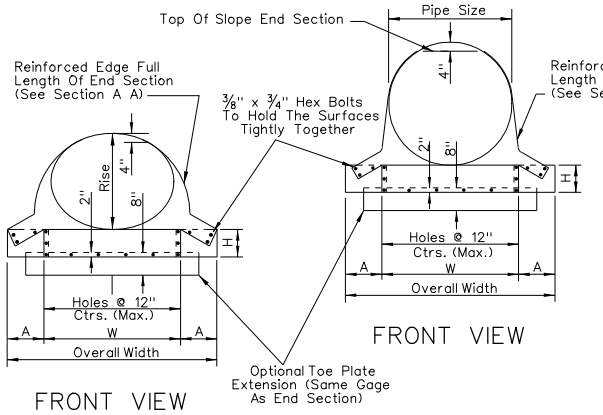

FRONT VIEW

FRONT VIEW

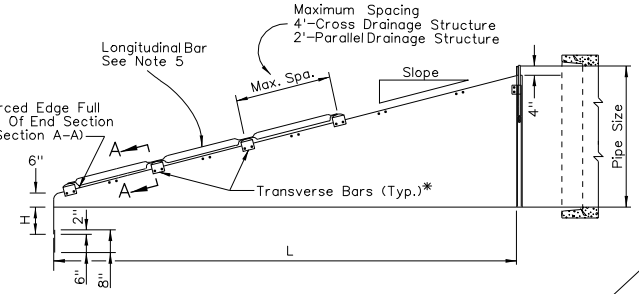

ELEVATION

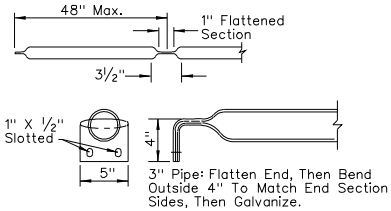

TRANSVERSE BAR DETAIL

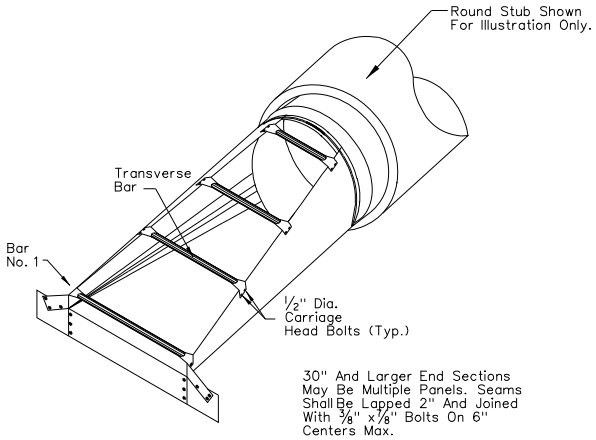

PARALLEL DRAINAGE STRUCTURE

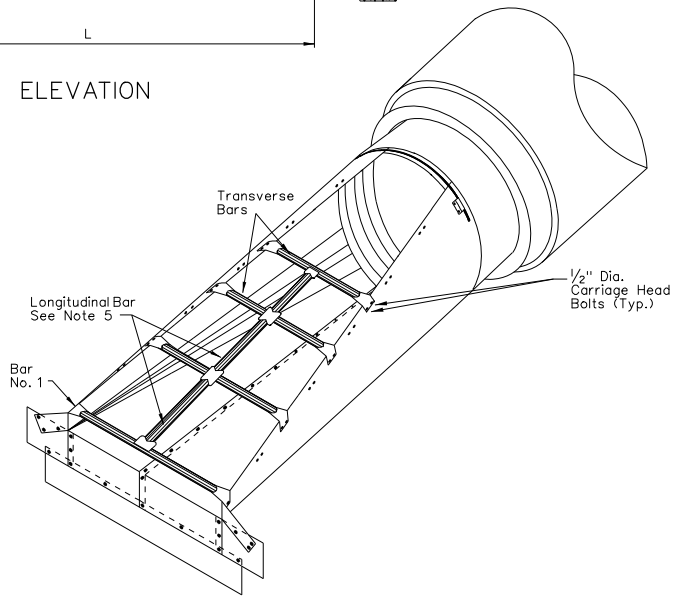

CROSS DRAINAGE STRUCTURE

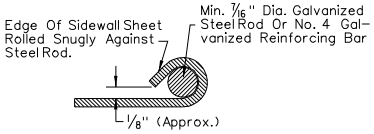

SECTION A–A

LEGEND:

* NUMBER OF BARS REQUIRED WILL VARY DEPENDING ON THE LENGTH OF THE END SECTION. BAR NO. 1 IS ALWAYS LOCATED 6" ABOVE FLOW LINE.

SHEET 1 OF 2

NEVADA DEPARTMENT OF TRANSPORTATION

METAL END SECTION (SAFETY TYPE) FOR CONCRETE & HDPE PIPES

Signed Original On File	R-2.2.3	(604)
CHIEF HYDRAULICS ENGINEER	ADOPTED 1/05	REVISION 5/09

SAFETY SLOPE END SECTIONS FOR ROUND PIPES									
Pipe	Min. Thick.		Dimensions +/- 2"				L Dimensions +/- 2"		
Dia. (in.)	in.	Ga.	A	H	W	Overall Width	4:1 Slope L (in.)	6:1 Slope L (in.)	10:1 Slope L (in.)
15	.064	16	8	6	21	37	20	30	50
18	.064	16	8	6	24	40	32	48	80
21	.064	16	8	6	27	43	44	66	110
24	.064	16	8	6	30	46	56	84	140
27	.109	12	12	9	33	57	68	102	170
30	.109	12	12	9	36	60	80	120	200
33	.109	12	12	9	39	63	92	138	230
36	.109	12	12	9	42	66	104	156	260
42	.109	12	16	12	48	80	128	192	—
48	.109	12	16	12	54	86	152	228	—
54	.109	12	16	12	60	92	176	264	—
60	.109	12	16	12	66	98	200	300	—

SAFETY SLOPE END SECTIONS FOR ELLIPTICAL PIPES											
Equiv	Inches		Min Thick		Dimensions +/- 2"				L Dimensions +/- 2"		
Dia. in.	Span	Rise	in.	Ga.	A	H	W	Overall Width	4:1 Slope L in.	6:1 Slope L in.	10:1 Slope L in.
18	23	14	.064	16	8	6	29	45	16	24	40
24	30	19	.064	16	8	6	36	52	36	54	90
27	34	22	.079	14	12	9	40	64	48	72	120
30	38	24	.079	14	12	9	44	68	56	84	140
33	42	27	.109	12	12	9	48	72	68	102	170
36	45	29	.109	12	16	12	51	83	76	114	190
42	53	34	.109	12	16	12	59	91	96	144	—
48	60	38	.109	12	16	12	66	98	112	168	—
54	68	43	.109	12	16	12	74	106	132	198	—
60	76	48	.109	12	16	12	80	112	152	228	—

NOTES:

1. GALVANIZED STEEL SHALL MEET A.A.S.H.T.O. SPECIFICATIONS.
2. CONNECTOR SIZES THRU 24" DIAMETER ATTACH TO PIPE WITH TYPE 1 STRAPS. ALL OTHER SIZES ATTACH WITH TYPE 2 RODS AND LUGS.
3. WHEN REQUIRED, TOE PLATE EXTENSIONS ARE TO BE 8" HIGH BY OVERALL WIDTH LESS 6". DO NOT INCLUDE UNLESS SPECIFIED.
4. FABRICATE TRANSVERSE BARS AND LONGITUDINAL BARS FROM STEEL PIPE CONFORMING TO ASTM A53 GRADE B SCHEDULE 40 SPECIFICATIONS HOT DIP GALVANIZE BARS AFTER FABRICATION. SLOTTED HOLES FOR TRANSVERSE BAR ATTACHMENT SHALL BE PROVIDED FOR ALL END SECTIONS.
5. LONGITUDINAL BARS SHOWN ARE FOR CROSS DRAINAGE STRUCTURES FOR PIPES LARGER THAN 30". LONGITUDINAL BAR REQUIRED WHERE OPEN SPAN (AS MEASURED PERPENDICULAR TO THE FLOW LINE) IS GREATER THAN 30". USE ADDITIONAL LONGITUDINAL BARS IF AFTER PLACEMENT OF ONE LONGITUDINAL BAR THE OPEN SPACING STILL EXCEEDS 30" ON LARGER END SECTIONS. WHERE THE OPEN SPAN OF ANY CROSS DRAINAGE STRUCTURE IS 30" OR SMALLER, NO BARS ARE REQUIRED. WELD LONGITUDINAL BARS TO TRANSVERSE BARS.
6. ALL REFERENCES MADE TO PIPE DIAMETER APPLY TO ROUND PIPE DIAMETERS AND THEIR ELLIPTICAL EQUIVALENTS.

SHEET 2 OF 2

NEVADA DEPARTMENT OF TRANSPORTATION

METAL END SECTION (SAFETY TYPE) FOR CONCRETE & HDPE PIPES

Signed Original On File	R-2.2.3.1 (604)	
CHIEF HYDRAULICS ENGINEER	ADOPTED 1/05	REVISION 5/09

DIAMETER	WEIGHT	A	B	C *	L	W
18"	670	9"	2'-1"	2'-1"	4'-2"	3'
24"	1300	91/2"	3'-6"	2'-6"	6'	4'
30"	1850	1'	4'-5"	1'-8"	6'-1"	5'
36"	3500	1'-3"	5'-2"	2'-11"	8'-1"	6'
42"	4930	1'-9"	5'-3"	2'-11"	8'-2"	6'-2"
48"	6700	2'	6'	2'-2"	8'-2"	7'
54"	7150	2'-3"	5'-6"	2'-9"	8'-3"	6'-10"

* For Reference Only

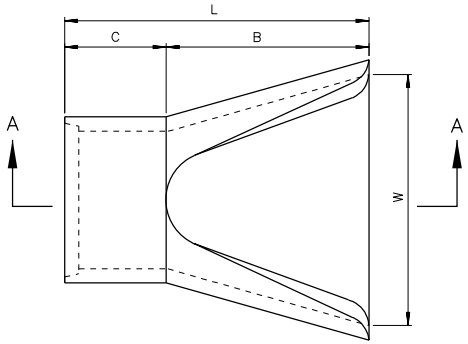

PLAN

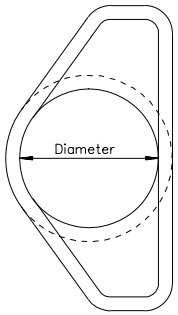

END VIEW

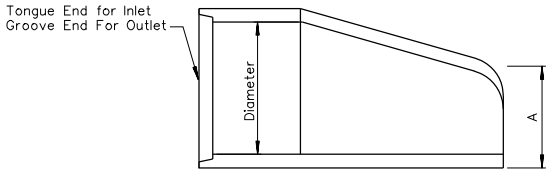

SECTION A-A

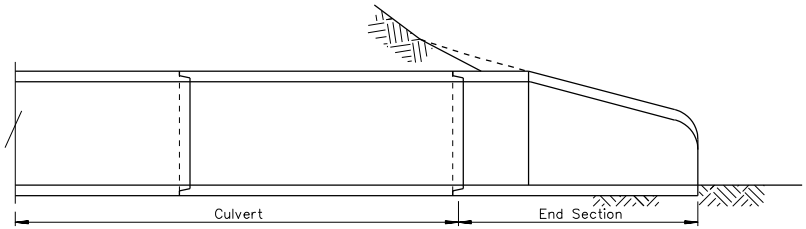

CROSS SECTION VIEW
18" RCP TO 54" RCP

NOTES:

1. CLASS AND TYPE OF CONCRETE SHALL BE AS SPECIFIED FOR REINFORCED CONCRETE PIPE.
2. STRUCTURAL DESIGN OF END SECTION SHALL CONFORM TO THAT OF STANDARD REINFORCED CONCRETE CULVERT PIPE.
3. LENGTH OF PIPE SHOWN ON THE DESIGN PLANS DOES NOT INCLUDE CONNECTOR SECTION (LENGTH C).
4. CONTACT HYDRAULICS ENGINEER FOR SIZES NOT LISTED.
5. ACTUAL DIMENSIONS OF END SECTIONS MAY VARY BY MANUFACTURER. ADJUST PIPE LENGTHS AS NECESSARY TO ACCOMMODATE PRECAST END SECTIONS USED. SEE SHEETS R-1.1.2 AND R-2.1.4 FOR EXTENSION BEYOND FILL SLOPE AND PIPE PAY LENGTHS.

NEVADA DEPARTMENT OF TRANSPORTATION

RCP END SECTION
18" RCP TO 54" RCP

Signed Original On File	R-2.3.1	(603)
CHIEF HYDRAULICS ENGINEER	ADOPTED 1/75	REVISION 5/09

NOTES:

1. CONCRETE SHALL BE CLASS A OR CLASS AA.
2. REINFORCING STEEL SHALL BE DEFORMED BARS WITH THE MAXIMUM SPACING OF 12" SET 2" CLEAR OF SURFACE OF CONCRETE. REINFORCING BARS MAY BE CUT AND BENT IN FIELD.

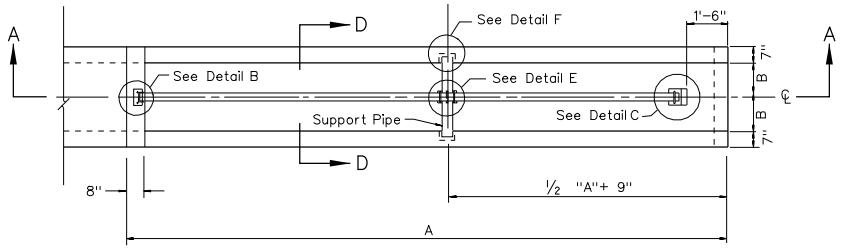

PLAN

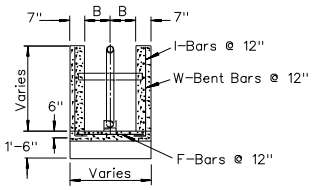

SECTION D-D

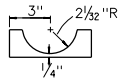

3/8" x 2"x 6"Plate Galv. A36
SADDLE PLATE DETAIL

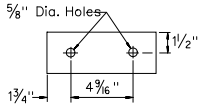

1/4" x 3"x 8"Plate Galv. A36
ANCHOR PLATE DETAIL

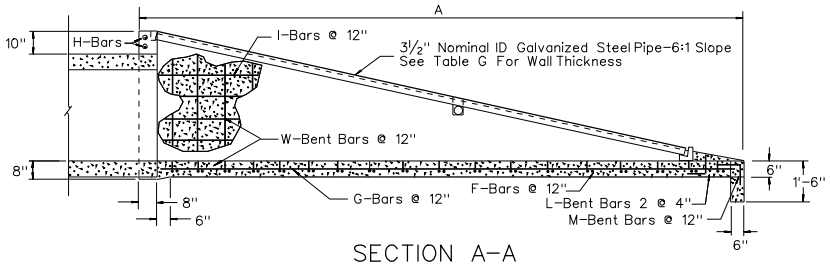

SECTION A-A

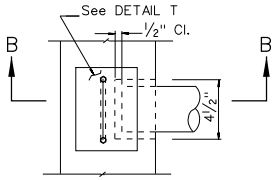

DETAIL B
PLAN

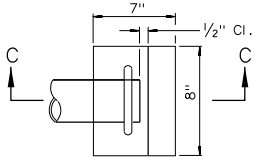

DETAIL C
PLAN

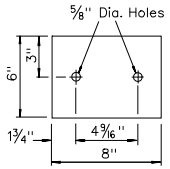

DETAIL T
STEEL PLATE

QUANTITY AND LENGTH OF No. 4 REINFORCING BARS

DIA. OF PIPE	F	G	H	I	M	W
30"	22-2'-2"	4-21'	2-3'-3"	3-19'-10" To 2'-6"	4-2'	19-4'-10" To 2'
33"	23-2'-5"	4-22'	2-3'-7"	3-20'-10" To --		20-5'-2" To --
36"	24-2'-8"	5-23'-6"	2-3'-10"	3-22'-4" To --	5-2'	22-5'-5" To --
39"	26-2'-11"	5-25'-6"	2-4'-1"	4-24'-4" To --		24-5'-9" To --
42"	28-3'-2"	5-27'	2-4'-4"	5-25'-10" To --		25-6' To --
45"	29-3'-5"	6-28'-6"	2-4'-7"	5-27'-4" To --	6-2'	27-6'-3" To --
48"	31-4'-10"	6-30'	2-4'-10"	5-28'-10" To --		28-6'-6" To --
51"	33-4'-10"	6-32'	2-5'-1"	6-30'-10" To --		30-6'-10" To --
54"	34-5'-4"	6-33'-6"	2-5'-4"	6-32'-4" To --		32-7'-1" To --
57"	37-5'-7"	7-35'	2-5'-7"	6-33'-10" To --	7-2'	33-7'-4" To --
60"	38-5'-10"	7-37'	2-5'-10"	7-35'-10" To --		35-7'-8" To --

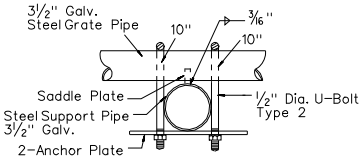

DETAIL E

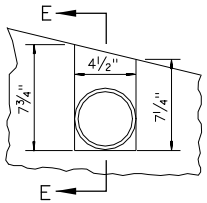

ELEVATION

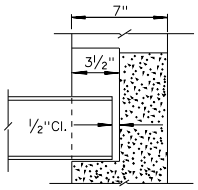

SECTION E-E

DETAIL F

TABLE G

DIA. OF PIPE	DIM. A	DIM. B	PIPE CLASS
30"	22'	1'-3"	40
33"	23'	1'-4 1/2"	
36"	24'-6"	1'-6"	
39"	26'-6"	1'-7 1/2"	
42"	28'	1'-9"	
45"	29'-6"	1'-10 1/2"	
48"	31'	2'	
51"	33'	2'-1 1/2"	80
54"	34'-6"	2'-3"	
57"	36'	2'-4 1/2"	
60"	38'	2'-6"	

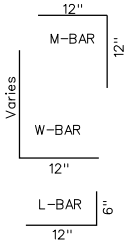

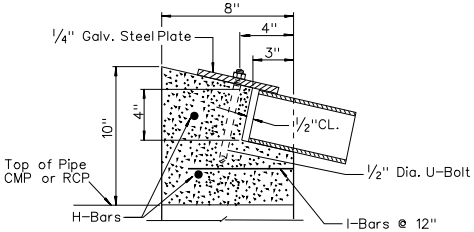

SECTION B-B

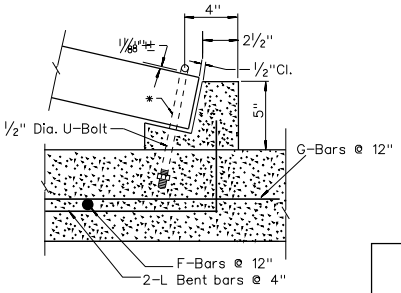

SECTION C-C

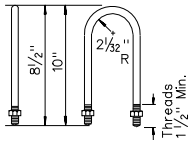

U-BOLT DETAIL

NEVADA DEPARTMENT OF TRANSPORTATION

CULVERT
END SAFETY GRATE
30"-60" CMP OR RCP

Signed Original On File	R-2.3.1.1	(601)
CHIEF HYDRAULICS ENGINEER	ADOPTED 1/01	REVISION 8/97

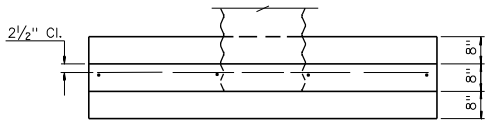

PLAN
SINGLE CMP

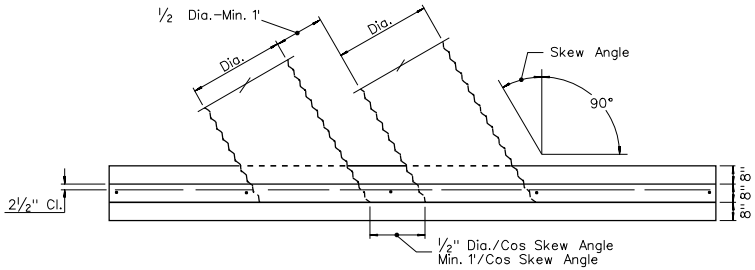

PLAN
DOUBLE CMP

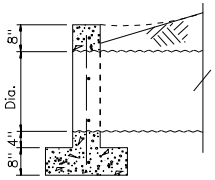

SECTION
FOR ALL HEADWALLS

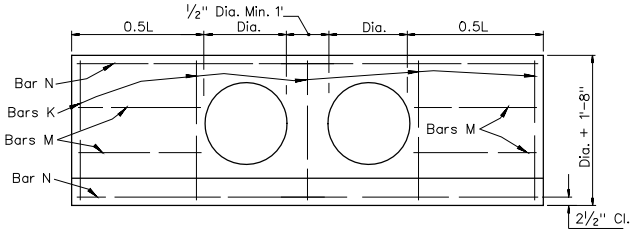

ELEVATION
DOUBLE CMP

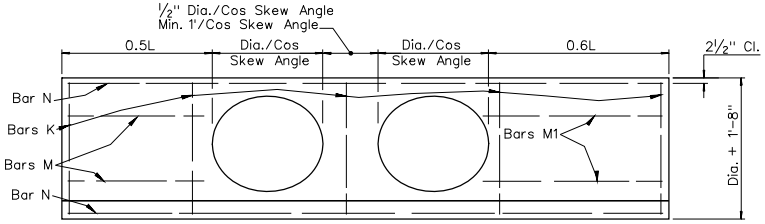

ELEVATION
DOUBLE CMP

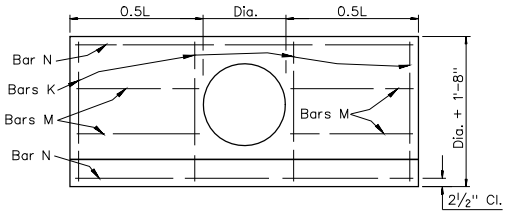

ELEVATION
SINGLE CMP

0° SKEW

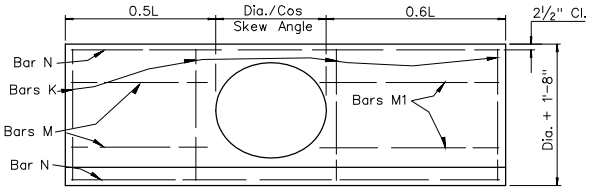

ELEVATION
SINGLE CMP

15° TO 45° SKEW

SHEET 1 OF 2

NEVADA DEPARTMENT OF TRANSPORTATION

CULVERT HEADWALLS
12" TO 42" CMP

Signed Original On File	R-2.4.1	(502)
CHIEF HYDRAULICS ENGINEER	ADOPTED 8/69	REVISION 5/09

QUANTITIES SHOWN ARE FOR TWO HEADWALLS

CMP SIZE DIA	CORR CMAP SXR	CMP AREA SQ. FT.	L	SINGLE CMP								DOUBLE CMP							
				0° SKEW		15° SKEW		30° SKEW		45° SKEW		0° SKEW		15° SKEW		30° SKEW		45° SKEW	
				CONC CU. YD.	STEEL LBS	CONC CU. YD.	STEEL LBS	CONC CU. YD.	STEEL LBS	CONC CU. YD.	STEEL LBS	CONC CU. YD.	STEEL LBS	CONC CU. YD.	STEEL LBS	CONC CU. YD.	STEEL LBS	CONC CU. YD.	STEEL LBS
12"		0.79	3'-6"	0.85	35	0.93	37	0.94	37	0.99	39	1.21	46	1.30	49	1.35	50	1.49	53
15"	18" x 11"	1.23	4'-3"	1.09	48	1.19	50	1.21	51	1.27	52	1.51	61	1.62	64	1.68	65	1.85	69
18"	22" x 13"	1.77	5'	1.36	55	1.48	59	1.51	59	1.57	61	1.83	70	1.96	73	2.05	75	2.24	80
24"	29" x 18"	3.14	6'-6"	1.95	78	2.12	83	2.16	84	2.25	86	2.53	95	2.73	100	2.84	103	3.08	108
30"	36" x 22"	4.91	8'	2.61	105	2.85	111	2.90	112	3.01	115	3.39	126	3.65	132	3.79	135	4.11	142
36"	43" x 27"	7.07	9'-6"	3.36	122	3.66	129	3.72	131	3.86	134	4.34	147	4.68	155	4.85	158	5.25	167
42"	50" x 31"	9.62	11'	4.18	167	4.56	177	4.64	179	4.81	182	5.39	196	5.81	206	6.03	210	6.52	220

QUANTITIES SHOWN ARE FOR ONE HEADWALL

LENGTH OF REINFORCING BARS																	
CMP SIZE	SINGLE CMP					SINGLE OR DOUBLE CMP							DOUBLE CMP				
	0°-45°	0°	15°	30°	45°	0°	15°		30°		45°		0°-45°	0°	15°	30°	45°
	NO. 4	NO. 5	NO. 5	NO. 5	NO. 5	NO. 4	NO. 4	NO. 4	NO. 4	NO. 4	NO. 4	NO. 4	NO. 4	NO. 5	NO. 5	NO. 5	NO. 5
	K	N	N	N	N	M	M	M1	M	M1	M	M1	K	N	N	N	N
12"	4@ 2'-5"	2@4'-3"	2@4'-8"	2@4'-9"	2@5'	2@1'-6"	1@1'-4"	1@2'	1@1'-3"	1@2'-1"	1@1'	1@2'-4"	5@2'-5"	2@6'-3"	2@6'-9"	2@7'-1"	2@7'-10"
15"	6@ 2'-8"	2@5'-3"	2@5'-9"	2@5'-11"	2@6'-2"	2@1'-8"	1@1'-6"	1@2'-2"	1@1'-5"	1@2'-3"	1@1'-2"	1@2'-6"	7@2'-8"	2@7'-6"	2@8'-1"	2@8'-6"	2@9'-5"
18"	6@ 2'-11"	2@6'-3"	2@6'-10"	2@7'	2@7'-4"	2@2'-3"	1@2'-1"	1@2'-11"	1@2'	1@3'	1@1'-9"	1@3'-3"	7@2'-11"	2@8'-9"	2@9'-5"	2@9'-10"	2@10'-11"
24"	6@ 3'-5"	2@8'-3"	2@9'	2@9'-3"	2@9'-9"	4@3'	2@2'-10"	2@3'-9"	2@2'-9"	2@3'-10"	2@2'-6"	2@4'-1"	7@3'-5"	2@11'-3"	2@12'-1"	2@12'-8"	2@14'
30"	8@ 3'-11"	2@10'-3"	2@11'-2"	2@11'-5"	2@12'-1"	4@3'-9"	2@3'-7"	2@4'-8"	2@3'-6"	2@4'-9"	2@3'-3"	2@5'	9@3'-11"	2@14'	2@15'	2@15'-9"	2@17'-5"
36"	8@ 4'-5"	2@12'-3"	2@13'-4"	2@13'-8"	2@14'-5"	4@4'-6"	2@4'-4"	2@5'-7"	2@4'-3"	2@5'-8"	2@4'	2@5'-11"	9@4'-5"	2@16'-9"	2@18'	2@18'-10"	2@20'-10"
42"	10@ 4'-11"	2@14'-3"	2@15'-6"	2@15'-11"	2@16'-10"	6@5'-3"	3@5'-1"	3@6'-6"	3@5'	3@6'-7"	3@4'-9"	3@6'-10"	11@4'-11"	2@19'-6"	2@20'-11"	2@21'-11"	2@24'-3"

NOTES:

1. CONCRETE SHALL BE CLASS A OR AA.
2. REINFORCING STEEL SHALL BE DEFORMED BARS WITH MAXIMUM SPACING OF 18" SET 2½" CLEAR OF SURFACE OF CONCRETE EXCEPT AS NOTED. BAR ENDS SHALL BE KEPT 1½" CLEAR OF SURFACE OF CONCRETE. REINFORCING BARS MAY BE CUT AND BENT IN FIELD.
3. FOOTINGS SHOWN ARE OF MINIMUM DEPTH AND SHALL BE EXTENDED IF SOIL IS UNSUITABLE OR LIABLE TO SCOUR.
4. CULVERT PIPES TO BE SET ON A SKEW SHALL BE MITERED WHEN HEADWALLS ARE CONSTRUCTED. WHEN HEADWALLS ARE NOT CONSTRUCTED THE PIPES SHALL NOT BE MITERED EXCEPT IN OVERFLOW SECTION.
5. FOR ESTIMATING HEADWALL QUANTITIES ON SKEWED CULVERTS:
   0° to 10° - USE QUANTITIES FOR 0° SKEW.
   11° to 25° - USE QUANTITIES FOR 15° SKEW.
   26° to 40° - USE QUANTITIES FOR 30° SKEW.
   41° to 55° - USE QUANTITIES FOR 45° SKEW.
   OVER 55° - CALCULATE QUANTITIES REQUIRED.
   CULVERTS SHOULD BE INSTALLED ON 5° INCREMENTS WHERE IT IS FEASIBLE.

NEVADA DEPARTMENT OF TRANSPORTATION

CULVERT HEADWALLS
12" TO 42" CMP

Signed Original On File	R-2.4.1.1	(502)
CHIEF HYDRAULICS ENGINEER	ADOPTED 8/69	REVISION 5/09

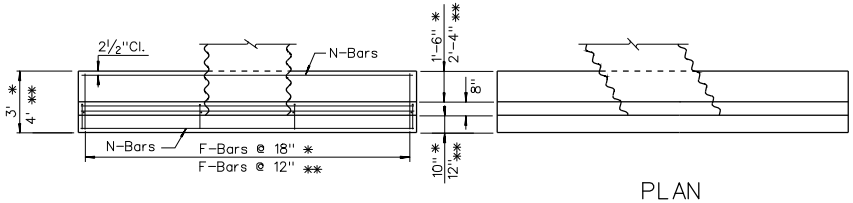

PLAN

PLAN

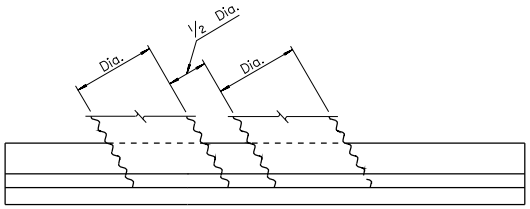

PLAN

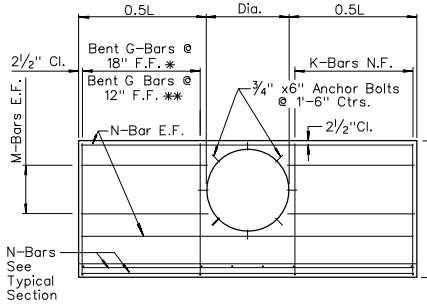

ELEVATION
SINGLE CMP
0° SKEW

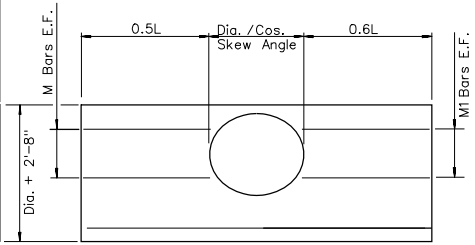

ELEVATION
SINGLE CMP
15° TO 45° SKEW

FOR DIMENSIONS & REINFORCING NOT SHOWN SEE 0° SKEW

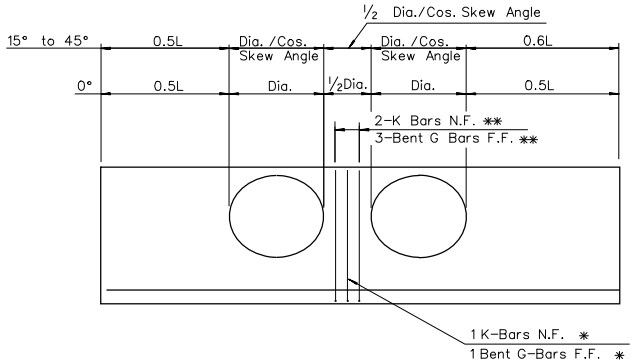

ELEVATION
DOUBLE CMP
0° TO 45° SKEW

FOR DIMENSIONS & REINFORCING NOT SHOWN SEE 0° SKEW

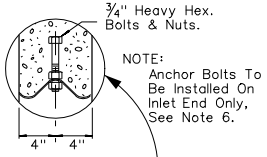

DETAIL A

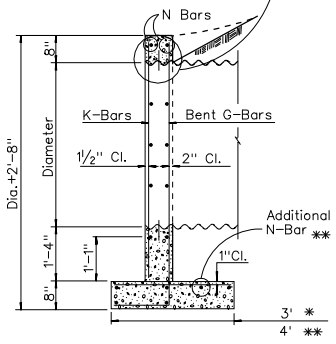

TYPICAL SECTION

LEGEND:

* - For 48" & 54" Dia.

** - For 60" & 72" Dia.

SHEET 1 OF 2

NEVADA DEPARTMENT OF TRANSPORTATION

CULVERT HEADWALLS
48" to 72" CMP

Signed Original On File	R-2.4.2	(502)
CHIEF HYDRAULICS ENGINEER	ADOPTED 8/69	REVISION 5/09

CMP SIZE DIA.	LENGTH OF REINFORCING BARS										
	SINGLE CMP										
	0° SKEW					15° SKEW					
	NO.5		NO.4			NO.5		NO.4			
	F	G	M	N	K	F	G	M	M1	N	K
48"	12@2' -9"	10@7' -7"	12@6'	9@16' -3"	10@5' -10"	13@2' -9"	11@7' -7"	6@5' -10"	6@7' -3"	9@17' -8"	11@5' -10"
54"	13@2' -9"	12@8' -1"	12@6' -9"	9@18' -3"	12@6' -4"	14@2' -9"	13@8' -1"	6@6' -7"	6@8' -1"	9@19' -10"	13@6' -4"
60"	21@3' -9"	18@8' -9"	12@7' -6"	10@20' -3"	12@6' -10"	23@3' -9"	20@8' -9"	6@7' -4"	6@9'	10@22'	13@6' -10"
72"	25@3' -9"	20@9' -9"	16@9'	10@24' -3"	14@7' -10"	27@3' -9"	22@9' -9"	8@8' -10"	8@10' -10"	10@26' -4"	15@7' -10"
DOUBLE CMP											
48"	16@2' -9"	11@7' -7"	12@6'	9@22' -3"	11@5' -10"	17@2' -9"	12@7' -7"	6@5' -10"	6@7' -3"	9@23' -10"	12@5' -10"
54"	18@2' -9"	13@8' -1"	12@6' -9"	9@25'	13@6' -4"	19@2' -9"	14@8' -1"	6@6' -7"	6@8' -1"	9@26' -10"	14@6' -4"
60"	29@3' -9"	21@8' -9"	12@7' -6"	10@27' -9"	14@6' -10"	31@3' -9"	23@8' -9"	6@7' -4"	6@9'	10@29' -9"	15@6' -10"
72"	34@3' -9"	23@9' -9"	16@9'	10@33' -3"	16@7' -10"	36@3' -9"	25@9' -9"	8@8' -10"	8@10' -10"	10@35' -8"	17@7' -10"

QUANTITIES SHOWN ABOVE ARE FOR ONE HEADWALL.

CMP SIZE DIA.	LENGTH OF REINFORCING BARS												
	SINGLE CMP												
	30° SKEW						45° SKEW						
	NO.5		NO.4				NO.5		NO.4				
	F	G	M	M1	N	K	F	G	M	M1	N	K
48"	13@2' -9"	11@7' -7"	6@5' -8"	6@7' -3"	9@18' -2"	11@5' -10"	14@2' -9"	12@7' -7"	6@5' -6"	6@7' -3"	9@19' -2"	12@5' -10"
54"	15@2' -9"	14@8' -1"	6@6' -5"	6@8' -1"	9@20' -4"	14@6' -4"	15@2' -9"	14@8' -1"	6@6' -3"	6@8' -1"	9@21' -6"	14@6' -4"
60"	23@3' -9"	20@8' -9"	6@7' -2"	6@9'	10@22' -7"	13@6' -10"	24@3' -9"	21@8' -9"	6@7'	6@9'	10@23' -11"	14@6' -10"
72"	28@3' -9"	23@9' -9"	8@8' -8"	8@10' -10"	10@27'	16@7' -10"	29@3' -9"	24@9' -9"	8@8' -6"	8@10' -10"	10@28' -7"	17@7' -10"
DOUBLE CMP												
48"	18@2' -9"	13@7' -7"	6@5' -8"	6@7' -3"	9@25' -1"	13@5' -10"	19@2' -9"	14@7' -7"	6@5' -6"	6@7' -3"	9@27' -8"	14@5' -10"
54"	20@2' -9"	15@8' -1"	6@6' -5"	6@8' -1"	9@28' -2"	15@6' -4"	22@2' -9"	17@8' -1"	6@6' -3"	6@8' -1"	9@31' -1"	17@6' -4"
60"	32@3' -9"	24@8' -9"	6@7' -2"	6@9'	10@31' -3"	16@6' -10"	36@3' -9"	28@8' -9"	6@7'	6@9'	10@34' -6"	18@6' -10"
72"	38@3' -9"	27@9' -9"	8@8' -8"	8@10' -10"	10@37' -5"	19@7' -10"	42@3' -9"	31@9' -9"	8@8' -6"	8@10' -10"	10@41' -4"	21@7' -10"

QUANTITIES SHOWN ABOVE ARE FOR ONE HEADWALL.

QUANTITIES SHOWN BELOW ARE FOR TWO HEADWALLS.

CMP SIZE DIA.	CMP AREA SQ FT	L	SINGLE CMP								DOUBLE CMP							
			0° SKEW		15° SKEW		30° SKEW		45° SKEW		0° SKEW		15° SKEW		30° SKEW		45° SKEW	
			CONC CU YD	STEEL LB	CONC CU YD	STEEL LB	CONC CU YD	STEEL LB	CONC CU YD	STEEL LB	CONC CU YD	STEEL LB	CONC CU YD	STEEL LB	CONC CU YD	STEEL LB	CONC CU YD	STEEL LB
48"	12.57	12' - 6"	6.72	597	7.31	651	7.45	656	7.75	696	8.76	715	9.43	772	9.82	815	10.65	874
54"	15.90	14'	7.90	706	8.60	766	8.76	802	9.10	814	10.28	841	11.07	904	11.51	950	12.47	1045
60"	19.64	15' - 6"	10.17	993	11.07	1089	11.28	1095	11.74	1147	13.28	1229	14.30	1328	14.87	1381	16.13	1547
72"	28.27	18' - 6"	13.13	1265	14.30	1377	14.56	1424	15.12	1481	17.07	1538	18.38	1654	19.11	1753	20.70	1937

NOTES:

1. CONCRETE SHALL BE CLASS A OR AA.
2. REINFORCING STEEL SHALL BE DEFORMED BARS WITH MAXIMUM SPACING OF 18" SET 2½" CLEAR OF SURFACE OF CONCRETE EXCEPT AS NOTED. BAR ENDS SHALL BE KEPT 1½" CLEAR OF SURFACE OF CONCRETE. REINFORCING BARS MAY BE CUT AND BENT IN FIELD.
3. FOOTINGS SHOWN ARE OF MINIMUM DEPTH AND SHALL BE EXTENDED IF SOIL IS UNSUITABLE OR LIABLE TO SCOUR.
4. CULVERT PIPES TO BE SET ON A SKEW SHALL BE MITERED WHEN HEADWALLS ARE CONSTRUCTED. WHEN HEADWALLS ARE NOT CONSTRUCTED THE PIPES SHALL NOT BE MITERED EXCEPT IN OVERFLOW SECTION.
5. FOR ESTIMATING HEADWALL QUANTITIES ON SKEWED CULVERTS:
   0° to 10° – USE QUANTITIES FOR 0° SKEW.
   11° to 25° – USE QUANTITIES FOR 15° SKEW.
   26° to 40° – USE QUANTITIES FOR 30° SKEW.
   41° to 55° – USE QUANTITIES FOR 45° SKEW.
   OVER 55° – CALCULATE QUANTITIES REQUIRED.
   CULVERTS SHOULD BE INSTALLED ON 5° INCREMENTS WHERE IT IS FEASIBLE.
6. NO DIRECT PAYMENT FOR ANCHOR BOLTS.

SHEET 2 OF 2

NEVADA DEPARTMENT OF TRANSPORTATION

CULVERT HEADWALLS
48" to 72" CMP

Signed Original On File	R-2.4.2.1	(502)
CHIEF HYDRAULICS ENGINEER	ADOPTED 8/69	REVISION 5/09

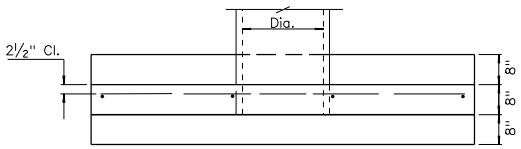

PLAN
SINGLE RCP/HDPE

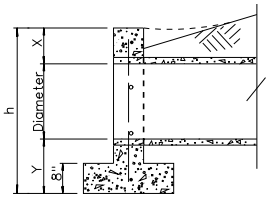

SECTION
FOR ALL HEADWALLS

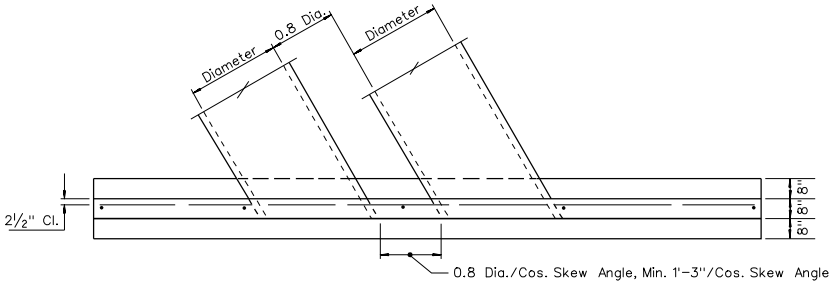

PLAN
DOUBLE RCP/HDPE

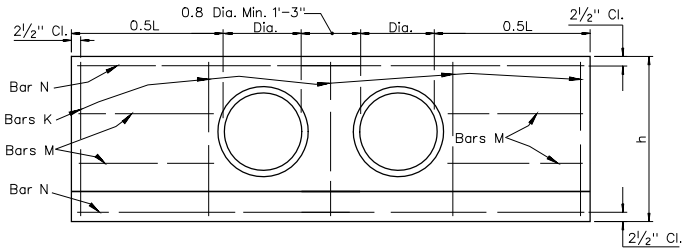

ELEVATION
DOUBLE RCP/HDPE

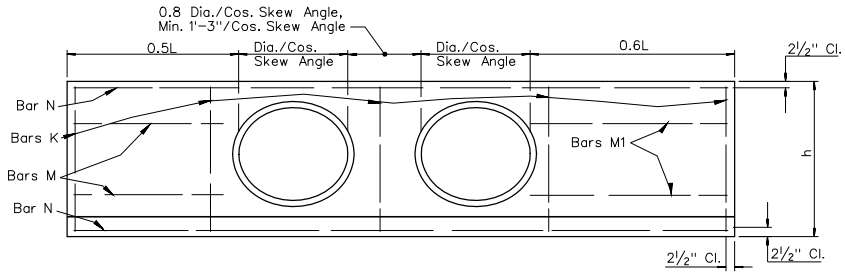

ELEVATION
DOUBLE RCP/HDPE

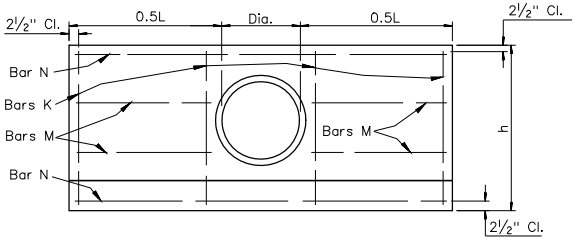

ELEVATION
SINGLE RCP/HDPE
0° SKEW

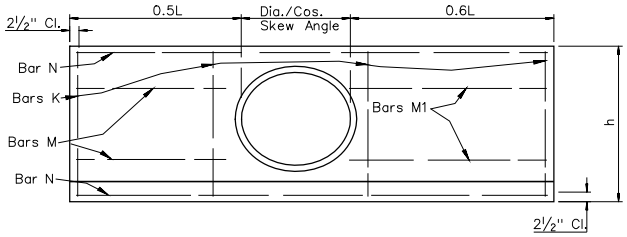

ELEVATION
SINGLE RCP/HDPE
15° TO 45° SKEW

SHEET 1 OF 2

NEVADA DEPARTMENT OF TRANSPORTATION

CULVERT HEADWALLS
12" TO 36" RCP/HDPE

Signed Original On File	R-2.5.1	(502)
CHIEF HYDRAULICS ENGINEER	ADOPTED 8/69	REVISION 5/09

QUANTITIES SHOWN BELOW ARE FOR TWO HEADWALLS.

RCP/ HDPE SIZE DIA.	RCP/ HDPE AREA SQ FT	SINGLE RCP/HDPE								DOUBLE RCP/HDPE								X	Y	L	h
		0° SKEW		15° SKEW		30° SKEW		45° SKEW		0° SKEW		15° SKEW		30° SKEW		45° SKEW					
		CONC CU YD	STEEL LB	CONC CU YD	STEEL LB	CONC CU YD	STEEL LB	CONC CU YD	STEEL LB	CONC CU YD	STEEL LB	CONC CU YD	STEEL LB	CONC CU YD	STEEL LB	CONC CU YD	STEEL LB				
12"	0.79	1.00	46	1.09	49	1.10	49	1.14	50	1.41	59	1.52	62	1.58	64	1.73	67	10"	1' – 2"	4'	3'
15"	1.23	1.32	55	1.45	58	1.47	59	1.52	60	1.80	70	1.93	73	2.01	75	2.18	79	10¼"	1' – 2¼"	5'	3' – 3½"
18"	1.77	1.62	69	1.77	73	1.80	74	1.85	75	2.15	85	2.31	89	2.40	91	2.60	96	10½"	1' – 2½"	5' – 9"	3' – 7"
21"	2.41	1.95	77	2.13	82	2.16	83	2.23	85	2.59	95	2.79	101	2.90	103	3.13	108	10¾"	1' – 2¾"	6' – 6"	3' – 10½"
24"	3.14	2.27	96	2.48	102	2.52	103	2.60	105	3.01	116	3.24	122	3.37	125	3.64	131	11"	1' – 3"	7' – 3"	4' – 2"
27"	3.98	2.62	105	2.86	111	2.90	112	2.99	114	3.48	128	3.75	134	3.89	137	4.21	144	11"	1' – 3"	8'	4' – 5"
30"	4.91	3.08	117	3.37	123	3.41	124	3.44	127	4.07	141	4.38	148	4.55	152	4.90	159	11½"	1' – 3½"	9'	4' – 9"
33"	5.94	3.50	125	3.82	132	3.87	134	3.98	137	4.62	153	4.98	160	5.17	164	5.56	172	11¾"	1' – 3¾"	9' – 9"	5' – ½"
36"	7.07	3.93	161	4.29	169	4.34	171	4.47	174	5.19	190	5.59	200	5.80	204	6.24	213	1'	1' – 4"	10' – 6"	5' – 4"

QUANTITIES SHOWN BELOW ARE FOR ONE HEADWALL.

RCP/ HDPE SIZE DIA.	LENGTH OF REINFORCING BARS																
	SINGLE RCP/HDPE					SINGLE OR DOUBLE RCP/HDPE							DOUBLE RCP/HDPE				
	0° –45°	0°	15°	30°	45°	0°	15°		30°		45°		0° –45°	0°	15°	30°	45°
	NO. 4	NO. 5	NO. 5	NO. 5	NO. 5	NO. 4	NO. 4	NO. 4	NO. 4	NO. 4	NO. 4	NO. 4	NO. 4	NO. 5	NO. 5	NO. 5	NO. 5
	K	N	N	N	N	M	M	M1	M	M1	M	M1	K	N	N	N	N
12"	6@2' –9"	2@4' –9"	2@5' –2"	2@5' –4"	2@5' –7"	2@1' –7"	1@1' –5"	1@2' –1"	1@1' –4"	1@2' –2"	1@1' –1"	1@2' –5"	7@2' –9"	2@7'	2@7' –6"	2@7' –11"	2@8' –9"
15"	6@3' –1"	2@6'	2@6' –6"	2@6' –8"	2@7'	2@2' –1"	1@1' –11"	1@2' –8"	1@1' –10"	1@2' –9"	1@1' –7"	1@3'	7@3' –1"	2@8' –6"	2@9' –2"	2@9' –7"	2@10' –7"
18"	6@3' –4"	2@7'	2@7' –8"	2@7' –10"	2@8' –2"	4@2' –5"	2@2' –3"	2@3' –1"	2@2' –2"	2@3' –2"	2@1' –11"	2@3' –5"	7@3' –4"	2@9' –9"	2@10' –6"	2@11'	2@12' –1"
21"	6@3' –8"	2@8'	2@8' –9"	2@8' –11"	2@9' –5"	4@2' –9"	2@2' –7"	2@3' –6"	2@2' –6"	2@3' –7"	2@2' –3"	2@3' –10"	7@3' –8"	2@11' –2"	2@12'	2@12' –7"	2@13' –10"
24"	8@3' –11"	2@9'	2@9' –10"	2@10' –1"	2@10' –7"	4@3' –2"	2@3'	2@4'	2@2' –11"	2@4' –1"	2@2' –8"	2@4' –4"	9@3' –11"	2@12' –7"	2@13' –7"	2@14' –2"	2@15' –8"
27"	8@4' –2"	2@10'	2@10' –11"	2@11' –2"	2@11' –9"	4@3' –6"	2@3' –4"	2@4' –4"	2@3' –3"	2@4' –5"	2@3'	2@4' –8"	9@4' –2"	2@14' –1"	2@15' –1"	2@15' –10"	2@17' –6"
30"	8@4' –6"	2@11' –3"	2@12' –3"	2@12' –7"	2@13' –2"	4@4'	2@3' –10"	2@5'	2@3' –9"	2@5' –1"	2@3' –6"	2@5' –4"	9@4' –6"	2@15' –9"	2@16' –11"	2@17' –9"	2@19' –7"
33"	8@4' –10"	2@12' –3"	2@13' –4"	2@13' –8"	2@14' –4"	4@4' –3"	2@4' –1"	2@5' –3"	2@4'	2@5' –4"	2@3' –9"	2@5' –7"	9@4' –10"	2@17' –3"	2@18' –6"	2@19' –5"	2@21' –5"
36"	10@5' –1"	2@13' –3"	2@14' –5"	2@14' –9"	2@15' –7"	6@4' –8"	3@4' –6"	3@5' –9"	3@4' –5"	3@5' –10"	3@4' –2"	3@6' –1"	11@5' –1"	2@18' –8"	2@20'	2@21'	2@23' –2"

NOTES:

1. CONCRETE SHALL BE CLASS A OR AA.
2. REINFORCING STEEL SHALL BE DEFORMED BARS WITH MAXIMUM SPACING OF 18" SET 2½" CLEAR OF SURFACE OF CONCRETE EXCEPT AS NOTED. BAR ENDS SHALL BE KEPT 1½" CLEAR OF SURFACE OF CONCRETE. REINFORCING BARS MAY BE CUT AND BENT IN FIELD.
3. FOOTINGS SHOWN ARE OF MINIMUM DEPTH AND SHALL BE EXTENDED IF SOIL IS UNSUITABLE OR LIABLE TO SCOUR.
4. CULVERT PIPES TO BE SET ON A SKEW SHALL BE MITERED WHEN HEADWALLS ARE CONSTRUCTED. WHEN HEADWALLS ARE NOT CONSTRUCTED THE PIPES SHALL NOT BE MITERED EXCEPT IN OVERFLOW SECTION.
5. FOR ESTIMATING HEADWALL QUANTITIES ON SKEWED CULVERTS:
   0° to 10° – USE QUANTITIES FOR 0° SKEW.
   11° to 25° – USE QUANTITIES FOR 15° SKEW.
   26° to 40° – USE QUANTITIES FOR 30° SKEW.
   41° to 55° – USE QUANTITIES FOR 45° SKEW.
   OVER 55° – CALCULATE QUANTITIES REQUIRED.
   CULVERTS SHOULD BE INSTALLED ON 5° INCREMENTS WHERE IT IS FEASIBLE.
6. DIMENSIONS X,Y,L, AND h TO REMAIN CONSTANT REGUARDLESS OF MINOR VARIATIONS IN WALL THICKNESS DUE TO CLASS OR TYPE OF PIPE USED.
7. REFER TO SHEET R-2.9.1 FOR DETAILS IF CONNECTING TO HDPE PIPE.

SHEET 2 OF 2

NEVADA DEPARTMENT OF TRANSPORTATION

CULVERT HEADWALLS
12" TO 36" RCP/HDPE

Signed Original On File	R-2.5.1.1	(502)
CHIEF HYDRAULICS ENGINEER	ADOPTED 8/69	REVISION 5/09

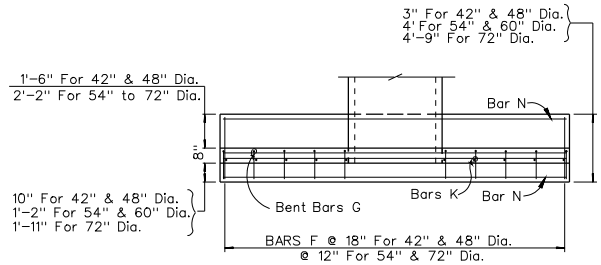

PLAN

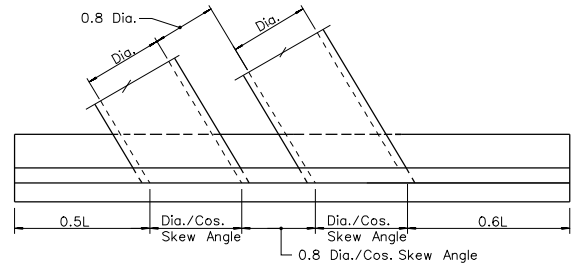

PLAN

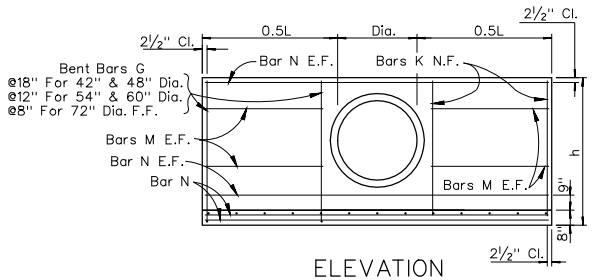

ELEVATION
SINGLE RCP/HDPE
0° SKEW

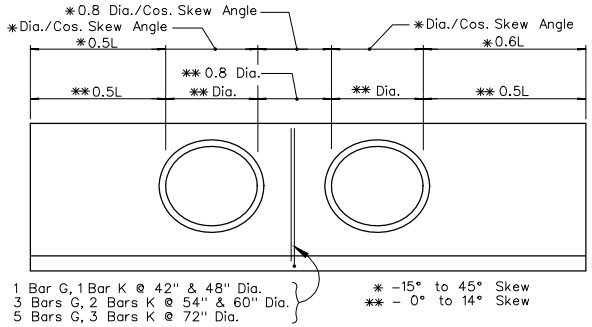

ELEVATION
DOUBLE RCP/HDPE
0° TO 45° SKEW

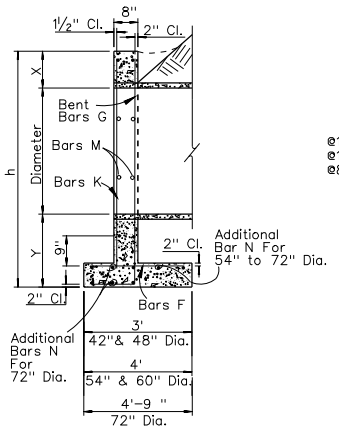

SECTION

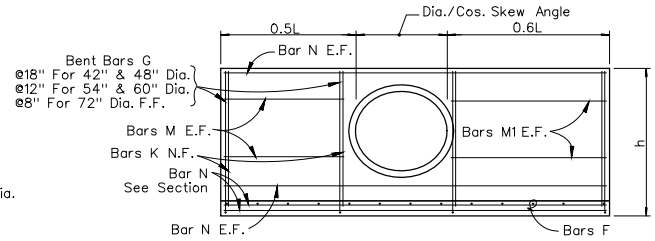

ELEVATION
SINGLE RCP/HDPE
15° TO 45° SKEW

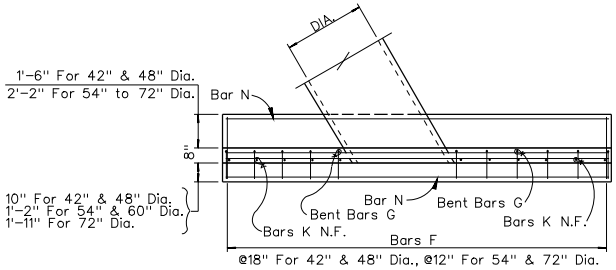

PLAN

SHEET 1 OF 2

NEVADA DEPARTMENT OF TRANSPORTATION

CULVERT HEADWALLS
42" TO 72" RCP &
42" TO 60" HDPE

Signed Original On File	R-2.5.2	(502)
CHIEF HYDRAULICS ENGINEER	ADOPTED 8/69	REVISION 5/09

QUANTITIES SHOWN BELOW ARE FOR TWO HEADWALLS.

RCP/ HDPE SIZE DIA.	RCP/ HDPE AREA SQ FT	SINGLE RCP/HDPE								DOUBLE RCP/HDPE								X	Y	L	h
		0° SKEW		15° SKEW		30° SKEW		45° SKEW		0° SKEW		15° SKEW		30° SKEW		45° SKEW					
		CONC CU YD	STEEL LB	CONC CU YD	STEEL LB	CONC CU YD	STEEL LB	CONC CU YD	STEEL LB	CONC CU YD	STEEL LB	CONC CU YD	STEEL LB	CONC CU YD	STEEL LB	CONC CU YD	STEEL LB				
42"	9.62	6.10	571	6.66	624	6.76	627	6.98	666	8.18	692	8.80	748	9.15	790	9.91	877	1' – 0¼"	2' – 0¼"	12'	6' – 6½"
48"	12.57	7.41	688	8.10	745	8.21	781	8.46	792	9.88	829	10.65	889	11.07	935	11.96	1030	1' – 1"	2' – 1"	13' – 9"	7' – 2"
54"	15.90	9.81	990	10.71	1091	10.87	1096	11.21	1146	13.11	1236	14.12	1340	14.68	1395	15.86	1562	1' – 1½"	2' – 1½"	15' – 6"	7' – 9"
60"	19.64	11.29	1137	12.32	1244	12.50	1250	12.88	1332	15.08	1407	16.25	1537	16.88	1596	18.25	1774	1' – 2"	2' – 2"	17'	8' – 4"
72"	28.27	15.62	1825	17.05	2002	17.30	2045	17.83	2170	20.87	2247	22.49	2464	23.36	2596	25.26	2881	1' – 3"	2' – 3"	20' – 3"	9' – 6"

QUANTITIES SHOWN BELOW ARE FOR ONE HEADWALL.

LENGTH OF REINFORCING BARS

SINGLE RCP/HDPE

RCP/ HDPE SIZE DIA	0° SKEW					15° SKEW						30° SKEW						45° SKEW					
	NO. 5		NO. 4			NO. 5		NO. 4				NO. 5		NO. 4				NO. 5		NO. 4			
	F	G	M	N	K	F	G	M	M1	N	K	F	G	M	M1	N	K	F	G	M	M1	N	K
42"	12@2'-9"	10@7'-6"	12@5'-5"	9@15'-3"	10@5'-8"	13@2'-9"	11@7'-6"	6@5'-3"	6@6'-6"	9@16'-7"	11@5'-8"	13@2'-9"	11@7'-6"	6@5'-1"	6@6'-6"	9@17'	11@5'-8"	14@2'-9"	12@7'-6"	6@4'-11"	6@6'-6"	9@7'-11"	12@5'-8"
48"	13@2'-9"	12@8'-1"	12@6'-3"	9@17'-6"	12@6'-3"	14@2'-9"	13@8'-1"	6@6'-1"	6@7'-5"	9@19'	13@6'-3"	15@2'-9"	14@8'-1"	6@5'-11"	6@7'-5"	9@19'-6"	14@6'-3"	15@2'-9"	14@8'-1"	6@5'-9"	6@7'-5"	9@20'-6"	14@6'-3"
54"	21@3'-9"	16@9'-1"	16@7'-1"	10@19'-9"	12@6'-10"	23@3'-9"	18@9'-1"	8@6'-11"	8@8'-5"	10@21'-6"	13@6'-10"	23@3'-9"	18@9'-1"	8@6'-9"	8@8'-5"	10@22'	13@6'-10"	24@3'-9"	19@9'-1"	8@6'-7"	8@8'-5"	10@23'-2"	14@6'-10"
60"	23@3'-9"	18@9'-8"	16@7'-9"	10@21'-9"	14@7'-5"	25@3'-9"	20@9'-8"	8@7'-7"	8@9'-4"	10@23'-8"	15@7'-5"	25@3'-9"	20@9'-8"	8@7'-5"	8@9'-4"	10@24'-3"	15@7'-5"	27@3'-9"	22@9'-8"	8@7'-3"	8@9'-4"	10@25'-6"	16@7'-5"
72"	27@4'-6"	30@11'-7"	20@9'-11"	12@26'	16@8'-7"	29@4'-6"	33@11'-7"	10@9'-2"	10@11'-3"	12@28'-3"	18@8'-7"	30@4'-6"	34@11'-7"	10@9'	10@11'-3"	12@29'	18@8'-7"	32@4'-6"	37@11'-7"	10@8'-10"	10@11'-3"	12@30'-6"	19@8'-7"

DOUBLE RCP/HDPE

RCP/ HDPE SIZE DIA	0° SKEW					15° SKEW						30° SKEW						45° SKEW					
	NO. 5		NO. 4			NO. 5		NO. 4				NO. 5		NO. 4				NO. 5		NO. 4			
	F	G	M	N	K	F	G	M	M1	N	K	F	G	M	M1	N	K	F	G	M	M1	N	K
42"	16@2'-9"	11@7'-6"	12@5'-5"	9@21'-6"	11@5'-8"	17@2'-9"	12@7'-6"	6@5'-3"	6@6'-6"	9@23'-1"	12@5'-8"	18@2'-9"	13@7'-6"	6@5'-1"	6@6'-6"	9@24'-3"	13@5'-8"	20@2'-9"	15@7'-6"	6@4'-11"	6@6'-6"	9@26'-10"	15@5'-8"
48"	18@2'-9"	13@8'-1"	12@6'-3"	9@24'-9"	13@6'-3"	19@2'-9"	14@8'-1"	6@6'-1"	6@7'-5"	9@26'-6"	14@6'-3"	20@2'-9"	15@8'-1"	6@5'-11"	6@7'-5"	9@27'-10"	15@6'-3"	22@2'-9"	17@8'-1"	6@5'-9"	6@7'-5"	9@30'-9"	17@6'-3"
54"	23@3'-9"	19@9'-1"	16@7'	10@27'-10"	14@6'-10"	31@3'-9"	21@9'-1"	8@6'-11"	8@8'-5"	10@29'-10"	15@6'-10"	32@3'-9"	22@9'-1"	8@6'-9"	8@8'-5"	10@31'-4"	16@6'-10"	36@3'-9"	26@9'-1"	8@6'-7"	8@8'-5"	10@34'-8"	18@6'-10"
60"	32@3'-9"	21@9'-8"	16@7'-9"	10@30'-9"	14@7'-5"	35@3'-9"	24@9'-8"	8@7'-7"	8@9'-4"	10@33'	16@7'-5"	36@3'-9"	25@9'-8"	8@7'-5"	8@9'-4"	10@34'-8"	17@7'-5"	40@3'-9"	29@9'-8"	8@7'-3"	8@9'-4"	10@38'-3"	19@7'-5"
72"	37@4'-6"	35@11'-7"	20@9'-11"	12@36'-10"	19@8'-7"	40@4'-6"	39@11'-7"	10@9'-2"	10@11'-3"	12@39'-5"	21@8'-7"	42@4'-6"	42@11'-7"	10@9'	10@11'-3"	12@41'-5"	22@8'-7"	46@4'-6"	48@11'-7"	10@8'-10"	10@11'-3"	12@45'-10"	25@8'-7"

NOTES:

1. CONCRETE SHALL BE CLASS A OR AA.
2. REINFORCING STEEL SHALL BE DEFORMED BARS WITH MAXIMUM SPACING OF 18" SET 2½" CLEAR OF SURFACE OF CONCRETE EXCEPT AS NOTED. BAR ENDS SHALL BE KEPT 1½" CLEAR OF SURFACE OF CONCRETE. REINFORCING BARS MAY BE CUT AND BENT IN FIELD.
3. FOOTINGS SHOWN ARE OF MINIMUM DEPTH AND SHALL BE EXTENDED IF SOIL IS UNSUITABLE OR LIABLE TO SCOUR.
4. CULVERT PIPES TO BE SET ON A SKEW SHALL BE MITERED WHEN HEADWALLS ARE CONSTRUCTED. WHEN HEADWALLS ARE NOT CONSTRUCTED THE PIPES SHALL NOT BE MITERED EXCEPT IN OVERFLOW SECTION.
5. FOR ESTIMATING HEADWALL QUANTITIES ON SKEWED CULVERTS:
   0° to 10° – USE QUANTITIES FOR 0° SKEW.
   11° to 25° – USE QUANTITIES FOR 15° SKEW.
   26° to 40° – USE QUANTITIES FOR 30° SKEW.
   41° to 55° – USE QUANTITIES FOR 45° SKEW.
   OVER 55° – CALCULATE QUANTITIES REQUIRED.
   CULVERTS SHOULD BE INSTALLED ON 5° INCREMENTS WHERE IT IS FEASIBLE.
6. DIMENSIONS X,Y,L, AND h TO REMAIN CONSTANT REGUARDLESS OF MINOR VARIATIONS IN WALL THICKNESS DUE TO CLASS OR TYPE OF PIPE USED.
7. REFER TO SHEET R-2.9.1 FOR DETAILS IF CONNECTING TO HDPE PIPE.

SHEET 2 OF 2

NEVADA DEPARTMENT OF TRANSPORTATION

CULVERT HEADWALLS
42" TO 72" RCP &
42" TO 60" HDPE

Signed Original On File	R-2.5.2.1	(502)
CHIEF HYDRAULICS ENGINEER	ADOPTED 8/69	REVISION 5/09

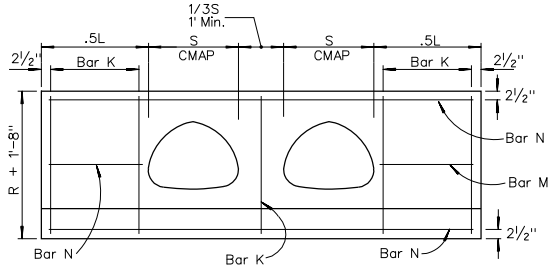

0° SKEW

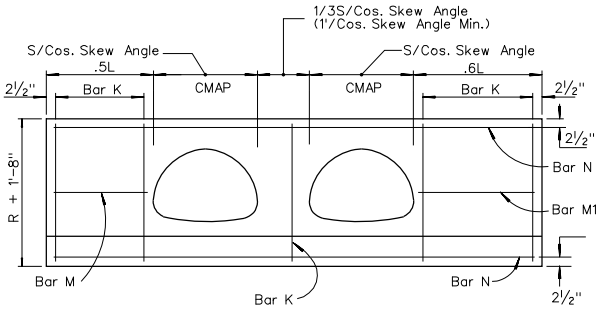

15° TO 45° SKEW

ELEVATIONS

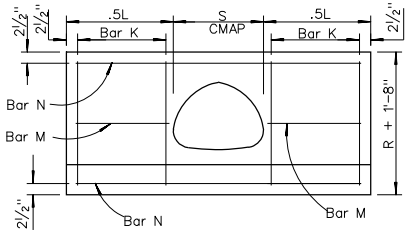

0° SKEW

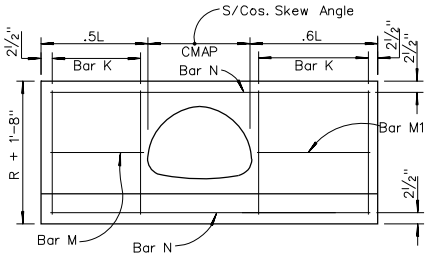

15° TO 45° SKEW

ELEVATIONS

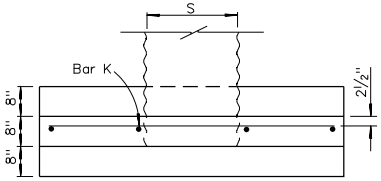

PLAN
SINGLE CMAP

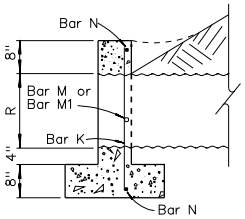

SECTION
FOR ALL HEADWALLS

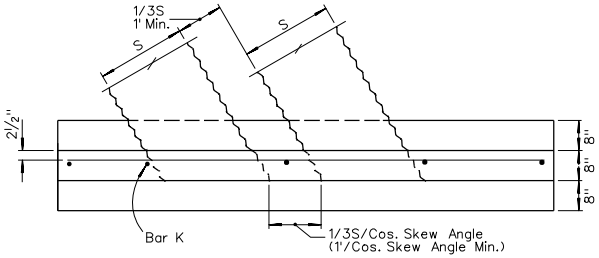

PLAN
DOUBLE CMAP

SHEET 1 OF 2

NEVADA DEPARTMENT OF TRANSPORTATION

CULVERT HEADWALLS
17" x 13" CMAP
TO 83" x 57"CMAP

Signed Original On File	R-2.6.1	(502)
CHIEF HYDRAULICS ENGINEER	ADOPTED 8/69	REVISION 5/09

QUANTITIES SHOWN BELOW ARE FOR TWO HEADWALLS

CMAP SIZE S X R	CMAP DIA	CMAP AREA SQ FT	L	SINGLE CMAP								DOUBLE CMAP							
				0° SKEW		15° SKEW		30° SKEW		45° SKEW		0° SKEW		15° SKEW		30° SKEW		45° SKEW	
				CONC CU YD	STEEL LB	CONC CU YD	STEEL LB	CONC CU YD	STEEL LB	CONC CU YD	STEEL LB	CONC CU YD	STEEL LB	CONC CU YD	STEEL LB	CONC CU YD	STEEL LB	CONC CU YD	STEEL LB
17" X 13"	15"	1.1	3'-3"	0.87	35	0.94	37	0.97	38	1.03	39	1.30	48	1.38	51	1.46	53	1.64	57
21" X 15"	18"	1.6	3'-9"	1.05	40	1.13	42	1.17	43	1.24	45	1.54	55	1.64	58	1.74	60	1.94	65
24" X 18"	21"	2.3	4'-9"	1.45	50	1.53	54	1.58	54	1.67	55	1.99	66	2.13	69	2.24	72	2.47	78
28" X 20"	24"	2.9	5'	1.51	59	1.64	63	1.68	64	1.79	66	2.13	77	2.29	81	2.40	84	2.67	90
35" X 24"	30"	4.4	6'	1.93	70	2.09	74	2.15	75	2.28	79	2.67	91	2.86	95	3.00	99	3.32	106
42" X 29"	36"	6.4	7'-3"	2.49	101	2.70	107	2.78	109	2.94	112	3.41	126	3.66	132	3.84	136	4.24	145
49" X 33"	42"	8.5	8'-3"	2.99	114	3.25	120	3.34	122	3.52	127	4.10	143	4.39	150	4.61	155	5.08	165
57" X 38"	48"	11.4	9'-6"	3.69	130	4.00	137	4.10	140	4.33	145	5.03	163	5.39	171	5.66	177	6.24	189
64" X 43"	54"	14.5	10'-6"	4.27	156	4.63	164	4.75	166	5.01	172	5.82	199	6.24	208	6.55	214	7.21	228
71" X 47"	60"	17.5	11'-6"	4.90	184	5.32	194	5.45	197	5.74	204	6.66	231	7.14	242	7.49	249	8.24	265
77" X 52"	66"	21.2	12'-6"	5.83	214	6.33	225	6.48	228	6.82	235	8.35	263	8.46	275	8.88	284	9.74	302
83" X 57"	72"	25.0	13'-6"	6.61	246	7.18	254	7.35	260	7.72	267	9.44	294	9.57	308	10.00	319	10.98	339

QUANTITIES SHOWN BELOW ARE FOR ONE HEADWALL

CMAP SIZE S X R	LENGTH OF REINFORCING BARS															
	SINGLE CMAP					SINGLE OR DOUBLE CMAP							DOUBLE CMAP				
	0°-45°	0°	15°	30°	45°	0°	15°		30°		45°		0°-45°	0°	15°	30°	45°
	NO. 4	NO. 5	NO. 5	NO. 5	NO. 5	NO. 4	NO. 4	NO. 4	NO. 4	NO. 4	NO. 4	NO. 4	NO. 4	NO. 5	NO. 5	NO. 5	NO. 5
	K	N	N	N	N	M	M	M1	M	M1	M	M1	K	N	N	N	N
17" X 13"	4@2'-4"	2@4'-6"	2@4'-11"	2@5'-1"	2@5'-6"	2@1'-4"	1@1'-2"	1@1'-9"	1@1'-9"	1@1'-10"	1@0'-10"	1@2'-1"	5@2'-4"	2@7'	2@7'-6"	2@7'-11"	2@9'
21" X 15"	4@2'-6"	2@5'-4"	2@5'-9"	2@6'	2@6'-6"	2@1'-7"	1@1'-5"	1@2'-1"	1@1'-4"	1@2'-2"	1@1'-1"	1@2'-5"	5@2'-6"	2@8'-2"	2@8'-8"	2@9'-3"	2@10'-6"
24" X 18"	6@2'-9"	2@6'-6"	2@7'-1"	2@7'-2"	2@7'-9"	2@2'-1"	1@2'-1"	1@2'-7"	1@2'-1"	1@2'-7"	1@2'-1"	1@2'-7"	7@2'-9"	2@9'-6"	2@10'-1"	2@10'-6"	2@11'-6"
28" X 20"	6@2'-11"	2@7'-2"	2@7'-9"	2@8'	2@8'-8"	2@2'-3"	1@2'-4"	1@2'-10"	1@2'-3"	1@2'-11"	1@2'-3"	1@3'-2"	7@2'-11"	2@10'-7"	2@11'-4"	2@12'	2@13'-6"
35" X 24"	6@3'-3"	2@8'-9"	2@9'-6"	2@9'-10"	2@10'-7"	2@2'-9"	1@2'-7"	1@3'-6"	1@2'-6"	1@3'-7"	1@2'-6"	1@3'-10"	7@3'-3"	2@12'-9"	2@13'-7"	2@14'-5"	2@16'-3"
42" X 29"	8@3'-8"	2@10'-7"	2@11'-5"	2@11'-10"	2@12'-9"	4@3'-4"	2@3'-2"	2@4'-2"	2@3'-1"	2@4'-3"	2@2'-10"	2@4'-6"	9@3'-8"	2@15'-4"	2@16'-5"	2@17'-4"	2@19'-6"
49" X 33"	8@4'	2@12'-2"	2@13'-2"	2@13'-8"	2@14'-9"	4@3'-10"	2@3'-8"	2@4'-9"	2@3'-7"	2@4'-10"	2@3'-4"	2@5'-1"	9@4'	2@17'-8"	2@18'-11"	2@20'-1"	2@22'-7"
57" X 38"	8@4'-5"	2@14'-1"	2@15'-2"	2@15'-9"	2@17'	4@4'-6"	2@4'-4"	2@5'-7"	2@4'-3"	2@5'-8"	2@4'	2@5'-11"	9@4'-5"	2@20'-6"	2@21'-11"	2@23'-3"	2@26'-2"
64" X 43"	10@4'-9"	2@15'-8"	2@16'-11"	2@17'-7"	2@19'	4@5'	2@4'-10"	2@6'-2"	2@4'-9"	2@6'-3"	2@4'-6"	2@6'-6"	12@4'-9"	2@22'-10"	2@24'-5"	2@25'-11"	2@29'-2"
71" X 47"	10@5'-1"	2@17'-3"	2@18'-7"	2@19'-4"	2@20'-11"	6@5'-6"	3@5'-4"	3@6'-9"	3@5'-3"	3@6'-10"	3@5'	3@7'-1"	12@5'-1"	2@25'-3"	2@26'-11"	2@28'-7"	2@32'-3"
77" X 52"	10@5'-9"	2@19'-3"	2@20'-8"	2@21'-6"	2@23'-1"	6@6'-3"	3@6'-3"	3@7'-7"	3@6'-3"	3@7'-7"	3@6'-3"	3@7'-7"	12@5'-9"	2@27'-9"	2@27'-9"	2@31'-4"	2@35'-2"
83" X 57"	10@6'-2"	2@20'-8"	2@22'-3"	2@23'-2"	2@24'-11"	6@6'-9"	3@6'-9"	3@8'-2"	3@6'-9"	3@8'-2"	3@6'-9"	3@8'-2"	12@6'-2"	2@29'-11"	2@31'-11"	2@33'-9"	2@38'

NOTES:

1. CONCRETE SHALL BE CLASS A OR AA.
2. REINFORCING STEEL SHALL BE DEFORMED BARS WITH MAXIMUM SPACING OF 18" SET 2½" CLEAR OF SURFACE OF CONCRETE EXCEPT AS NOTED. BAR ENDS SHALL BE KEPT 1½" CLEAR OF SURFACE OF CONCRETE. REINFORCING BARS MAY BE CUT AND BENT IN FIELD.
3. FOOTINGS SHOWN ARE OF MINIMUM DEPTH AND SHALL BE EXTENDED IF SOIL IS UNSUITABLE OR LIABLE TO SCOUR.
4. CULVERT PIPES TO BE SET ON A SKEW SHALL BE MITERED WHEN HEADWALLS ARE CONSTRUCTED. WHEN HEADWALLS ARE NOT CONSTRUCTED THE PIPES SHALL NOT BE MITERED EXCEPT IN OVERFLOW SECTION.
5. FOR ESTIMATING HEADWALL QUANTITIES ON SKEWED CULVERTS:
   0° to 10° - USE QUANTITIES FOR 0° SKEW.
   11° to 25° - USE QUANTITIES FOR 15° SKEW.
   26° to 40° - USE QUANTITIES FOR 30° SKEW.
   41° to 55° - USE QUANTITIES FOR 45° SKEW.
   OVER 55° - CALCULATE QUANTITIES REQUIRED.
   CULVERTS SHOULD BE INSTALLED ON 5° INCREMENTS WHERE IT IS FEASIBLE.

SHEET 2 OF 2

NEVADA DEPARTMENT OF TRANSPORTATION

CULVERT HEADWALLS
17" x 13" CMAP
TO 83" x 57"CMAP

Signed Original On File	R-2.6.1.1	(502)
CHIEF HYDRAULICS ENGINEER	ADOPTED 8/69	REVISION 5/09

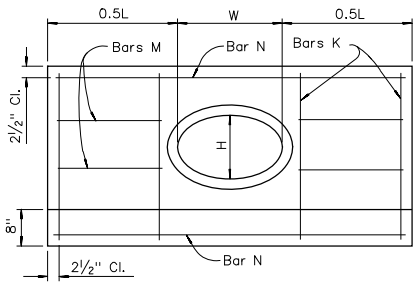

ELEVATION
SINGLE OVAL RCP
0° SKEW

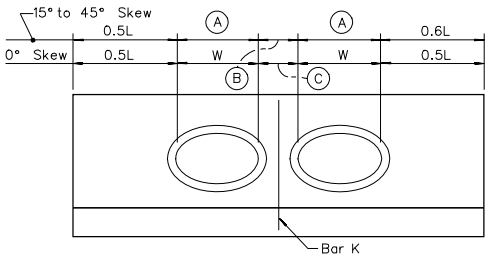

ELEVATION
DOUBLE OVAL RCP
0° TO 45° SKEW
For Reinforcing Not Shown See Single Culvert Headwalls

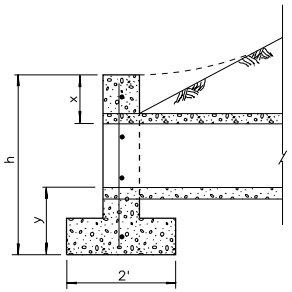

SECTION
FOR ALL HEADWALLS

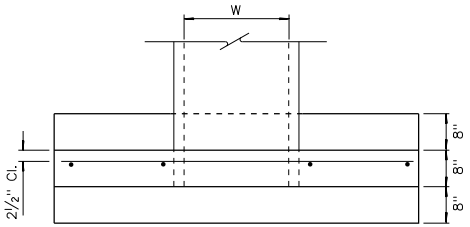

PLAN

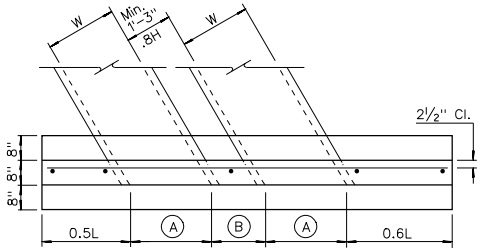

PLAN

LEGEND:

Ⓐ — W/Cos. Skew Angle

Ⓑ — .8H/Cos. Skew Angle
Min. 1'/Cos. Skew Angle

Ⓒ — .8H @ Right Angle to Pipe

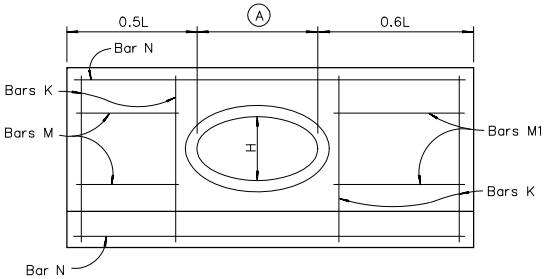

ELEVATION
SINGLE OVAL RCP
15° TO 45° SKEW

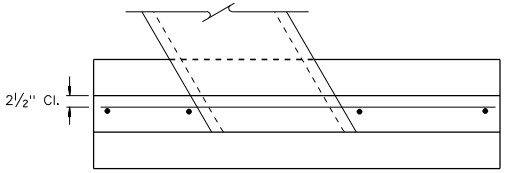

PLAN

SHEET 1 OF 2

NEVADA DEPARTMENT OF TRANSPORTATION

CULVERT HEADWALLS
23"x14" OVAL RCP TO
60" x 38" OVAL RCP

Signed Original On File	R-2.7.1	(502)
CHIEF HYDRAULICS ENGINEER	ADOPTED 8/69	REVISION 5/09

QUANTITIES SHOWN BELOW ARE FOR TWO HEADWALLS.

OVAL RCP SIZE W X H	RCP SIZE	OVAL RCP AREA SQ.FT	SINGLE OVAL RCP								DOUBLE OVAL RCP								X	Y	L	h
			0° SKEW		15° SKEW		30° SKEW		45° SKEW		0° SKEW		15° SKEW		30° SKEW		45° SKEW					
			CONC CU YD	STEEL LB	CONC CU YD	STEEL LB	CONC CU YD	STEEL LB	CONC CU YD	STEEL LB	CONC CU YD	STEEL LB	CONC CU YD	STEEL LB	CONC CU YD	STEEL LB	CONC CU YD	STEEL LB				
23"x14"	18"	1.82	1.37	57	1.49	60	1.52	61	1.60	63	1.94	74	2.08	77	2.18	80	2.40	86	10¾"	1' -2¾"	4' -9"	3"-3½"
30"x19"	24"	3.21	1.95	79	2.13	82	2.17	83	2.27	86	2.64	98	2.85	103	2.97	106	3.25	113	11¼"	1' -3¼"	6' -3"	3"-9½"
34"x22"	27"	4.20	2.30	87	2.50	92	2.55	93	2.66	96	3.11	110	3.34	116	3.49	119	3.81	127	11½"	1' -3½"	7"	4"-1"
38"x24"	30"	5.15	2.57	93	2.79	99	2.85	100	2.98	104	3.49	119	3.75	125	4.07	129	4.28	137	11¾"	1' -3¾"	7"-6"	4"-3½"
42"x27"	33"	6.39	2.94	113	3.20	120	3.26	121	3.40	125	4.00	141	4.30	148	4.49	153	4.91	162	11¾"	1' -3¾"	8"-3"	4"-6½"
45"x29"	36"	7.37	3.31	122	3.53	128	3.68	130	3.82	134	4.48	152	4.81	159	5.04	164	5.47	174	1' -0½"	1' -4½"	9"	4"-10"
53"x34"	42"	10.15	4.06	164	4.42	173	4.50	175	4.68	180	5.48	199	5.90	209	6.14	214	6.69	226	1' -1"	1' -5"	10"-3"	5"-4"
60"x38"	48"	12.86	4.81	182	5.24	192	5.33	194	5.54	199	6.49	221	6.98	231	7.26	238	7.90	251	1' -1½"	1' -5½"	11"-6"	5"-9"

QUANTITIES SHOWN BELOW ARE FOR ONE HEADWALL.

OVAL RCP SIZE W & H	LENGTH OF REINFORCING BARS																
	SINGLE OVAL RCP					SINGLE OR DOUBLE OVAL RCP							DOUBLE OVAL RCP				
	0°-45°	0°	15°	30°	45°	0°	15°		30°		45°		0°-45°	0°	15°	30°	45°
	No.4	No.5	No.5	No.5	No.5	No.4	No.4	No.4	No.4	No.4	No.4	No.4	No.4	No.5	No.5	No.5	No.5
	K	N	N	N	N	M	M	M1	M	M1	M	M1	K	N	N	N	N
23"x14"	6@3'-1"	2@6'-5"	2@7'	2@7'-2"	2@7'-8"	2@1'-11"	1@1'-9"	1@2'-6"	1@1'-8"	1@2'-7"	1@1'-5"	1@2'-10"	7@3'-1"	2@9'-7"	2@10'-3"	2@10'-10"	2@12'-2"
30"x19"	6@3'-6"	2@8'-6"	2@9'-3"	2@9'-6"	2@10'-2"	4@2'-7"	2@2'-5"	2@3'-3"	2@2'-4"	2@3'-4"	2@2'-1"	2@3'-7"	7@3'-6"	2@12'-3"	2@13'-1"	2@13'-11"	2@15'-6"
34"x22"	6@3'-10"	2@9'-7"	2@10'-4"	2@10'-9"	2@11'-5"	4@3'	2@2'-10"	2@3'-9"	2@2'-9"	2@3'-10"	2@2'-6"	2@4'-1"	7@3'-10"	2@13'-11"	2@14'-10"	2@15'-8"	2@17'-6"
38"x24"	6@4'-1"	2@10'-5"	2@11'-3"	2@11'-8"	2@12'-6"	4@3'-2"	2@3'	2@4'	2@2'-11"	2@4'-1"	2@2'-8"	2@4'-4"	7@4'-1"	2@15'-2"	2@16'-3"	2@17'-2"	2@19'-3"
42"x27"	8@4'-4"	2@11'-6"	2@12'-5"	2@12'-11"	2@13'-9"	4@3'-7"	2@3'-5"	2@4'-6"	2@3'-6"	2@4'-9"	2@3'-3"	2@5'	9@4'-4"	2@16'-10"	2@17'-11"	2@19'	2@21'-3"
45"x29"	8@4'-7"	2@12'-6"	2@13'-6"	2@14'	2@14'-11"	4@3'-10"	2@3'-8"	2@4'-9"	2@3'-7"	2@4'-10"	2@3'-4"	2@5'-1"	9@4'-7"	2@18'-2"	2@19'-5"	2@20'-7"	2@23'
53"x34"	10@5'-1"	2@14'-5"	2@15'-7"	2@16'-2"	2@17'-3"	6@4'-6"	3@4'-4"	3@5'-7"	3@4'-3"	3@5'-8"	3@4'	3@5'-11"	11@5'-1"	2@21'-1"	2@22'-6"	2@23'-10"	2@26'-9"
60"x38"	10@5'-6"	2@16'-3"	2@17'-7"	2@18'-2"	2@19'-6"	6@5'-1"	3@4'-11"	3@6'-3"	3@4'-10"	3@6'-4"	3@4'-7"	3@6'-7"	11@5'-6"	2@23'-9"	2@25'-5"	2@26'-10"	2@30'-2"

NOTES:

1. CONCRETE SHALL BE CLASS A OR AA.
2. REINFORCING STEEL SHALL BE DEFORMED BARS WITH MAXIMUM SPACING OF 18" SET 2½" CLEAR OF SURFACE OF CONCRETE EXCEPT AS NOTED. BAR ENDS SHALL BE KEPT 1½" CLEAR OF SURFACE OF CONCRETE. REINFORCING BARS MAY BE CUT AND BENT IN FIELD.
3. FOOTINGS SHOWN ARE OF MINIMUM DEPTH AND SHALL BE EXTENDED IF SOIL IS UNSUITABLE OR LIABLE TO SCOUR.
4. CULVERT PIPES TO BE SET ON A SKEW SHALL BE MITERED WHEN HEADWALLS ARE CONSTRUCTED. WHEN HEADWALLS ARE NOT CONSTRUCTED THE PIPES SHALL NOT BE MITERED EXCEPT IN OVERFLOW SECTION.
5. DIMENSIONS X, Y, L, AND h TO REMAIN CONSTANT REGARDLESS OF MINOR VARIATIONS IN WALL THICKNESS DUE TO CLASS OF PIPE USED.
6. FOR ESTIMATING HEADWALL QUANTITIES ON SKEWED CULVERTS:
   0° to 10° - USE QUANTITIES FOR 0° SKEW.
   11° to 25° - USE QUANTITIES FOR 15° SKEW.
   26° to 40° - USE QUANTITIES FOR 30° SKEW.
   41° to 55° - USE QUANTITIES FOR 45° SKEW.
   OVER 55° - CALCULATE QUANTITIES REQUIRED.
   CULVERTS SHOULD BE INSTALLED ON 5° INCREMENTS WHERE IT IS FEASIBLE.

SHEET 2 OF 2

NEVADA DEPARTMENT OF TRANSPORTATION

CULVERT HEADWALLS
23"x14" OVAL RCP TO
60" x 38" OVAL RCP

Signed Original On File	R-2.7.1.1	(502)
CHIEF HYDRAULICS ENGINEER	ADOPTED 8/69	REVISION 5/09

QUANTITIES SHOWN BELOW ARE FOR TWO HEADWALLS.

OVAL RCP SIZE W X H	RCP SIZE	OVAL RCP AREA SQ.FT	SINGLE OVAL RCP								DOUBLE OVAL RCP								X	Y	L	h
			0° SKEW		15° SKEW		30° SKEW		45° SKEW		0° SKEW		15° SKEW		30° SKEW		45° SKEW					
			CONC. CU. YD.	STEEL LB.	CONC. CU. YD.	STEEL LB.	CONC. CU. YD.	STEEL LB.	CONC. CU. YD.	STEEL LB.	CONC. CU. YD.	STEEL LB.	CONC. CU. YD.	STEEL LB.	CONC. CU. YD.	STEEL LB.	CONC. CU. YD.	STEEL LB.				
68"x43"	54"	16.62	7.19	628	7.82	683	7.98	720	8.34	767	9.86	789	10.58	848	11.07	897	12.11	1031	1'-2½"	2'-2 "	12'-9"	6'-11"
76"x48"	60"	20.55	8.39	746	9.13	805	9.32	813	9.71	889	11.47	921	12.31	985	13.06	1075	15.66	1207	1'-2½"	2'-2½"	14'-3"	7'-5"
91"x58"	72"	29.71	12.11	1168	13.18	1273	13.43	1321	14.02	1412	16.59	1495	17.82	1616	18.61	1730	20.36	1965	1'-3½"	2'-3½"	17'	8'-5"

QUANTITIES SHOWN BELOW ARE FOR ONE HEADWALL.

OVAL RCP SIZE W & H	LENGTH OF REINFORCING BARS																						
	SINGLE OVAL RCP																						
	0° SKEW					15° Skew						30° SKEW						45° SKEW					
	No. 5		No. 4			No. 5		No. 4				No. 5		No. 4				No. 5		No. 4			
	F	G	M	N	K	F	G	M	M1	N	K	F	G	M	M1	N	K	F	G	M	M1	N	K
68"x43"	13@2'-9"	10@7'-10"	12@5'-8"	9@18'-2"	10@6'	14@2'-9"	12@7'-10"	6@5'-6"	6@6'-10"	9@19'-8"	11@6'	15@2'-9"	12@7'-10"	6@5'-4"	6@6'-10"	9@20'-4"	12@6'	16@2'-9"	13@7'-10"	6@5'-2"	6@6'-10"	9@21'-10"	13@6'
76"x48"	15@2'-9"	12@8'-4"	12@6'-4"	9@20'-4"	12@6'-6"	16@2'-9"	13@8'-4"	6@6'-2"	6@7'-7"	9@22'	13@6'-6"	16@2'-9"	13@8'-4"	6@6'	6@7'-7"	9@22'-9"	13@6'-6"	17@2'-9"	15@8'-4"	6@5'-10"	6@7'-7"	9@24'-5"	15@6'-6"
91"x58"	25@3'-9"	18@9'-8"	16@7'-7"	10@20'-4"	12@7'-6"	27@3'-9"	20@9'-8"	8@7'-5"	8@9'-1"	10@26'-4"	13@7'-6"	28@3'-9"	21@9'-8"	8@7'-3"	8@9'-1"	10@27'-9"	14@7'-6"	30@3'-9"	23@9'-8"	8@7'-1"	8@9'-1"	10@29'-2"	15@7'-6"
DOUBLE OVAL RCP																							
68"x43"	19@2'-9"	11@7'-10"	12@6'-8"	9@26'-8"	11@6'	20@2'-9"	12@7'-10"	6@5'-6"	6@6'-10"	9@28'-6"	12@6'	21@2'-9"	13@7'-10"	6@5'-4"	6@6'-11"	9@30'-2"	13@6'	24@2'-9"	16@7'-10"	6@5'-2"	6@6'-10"	9@33'-10"	16@6'
76"x48"	21@2'-9"	13@8'-4"	12@6'-4"	9@29'-10"	13@6'-6"	22@2'-9"	14@8'-4"	6@6'-2"	6@7'-7"	9@31'-10"	14@6'-6"	24@2'-9"	16@8'-4"	6@6'	6@7'-7"	9@34'-2"	13@6'-6"	26@2'-9"	19@8'-4"	6@5'-10"	6@7'-7"	9@37'-10"	19@6'-6"
91"x58"	37@3'-9"	21@9'-8"	16@7'-7"	10@35'-9"	14@7'-6"	39@3'-9"	23@9'-8"	8@7'-5"	8@9'-1"	10@38'-2"	16@7'-6"	41@3'-9"	26@9'-8"	8@7'-3"	8@9'-1"	10@40'-5"	17@7'-6"	46@3'-9"	31@9'-8"	8@7'-1"	8@9'-1"	10@45'-4"	20@7'-6"

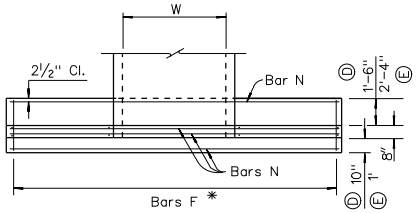

PLAN

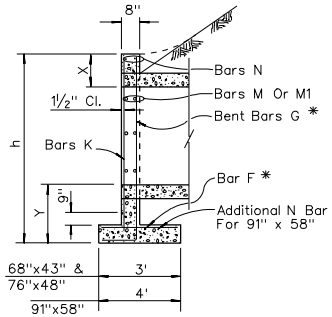

SECTION
FOR ALL HEADWALLS

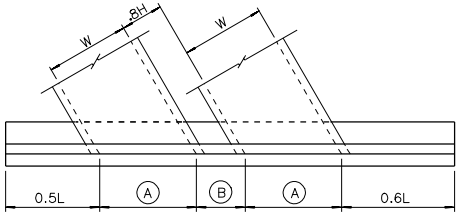

PLAN

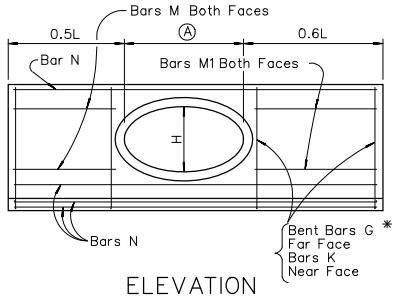

ELEVATION

SINGLE OVAL RCP
0° TO 45° SKEW

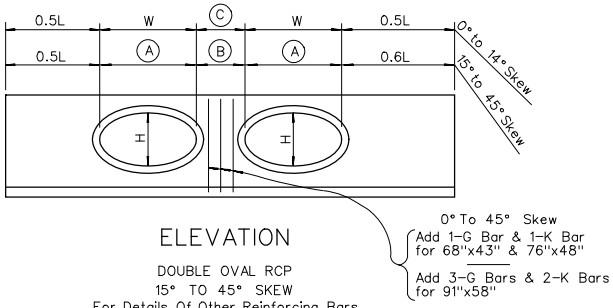

ELEVATION

DOUBLE OVAL RCP
15° TO 45° SKEW
For Details Of Other Reinforcing Bars,
See Single Culvert Headwalls

LEGEND:

- (A) — W/Cos. Skew Angle
- (B) — .8H/Cos. Skew Angle
- (C) — .8H @ Right Angle to Pipe
- (D) — For 68"x43" & 76"x48"
- (E) — For 91"x58"
- * — @18" Centers 68"x43" & 76"x48"
  @12" Centers 91"x58"

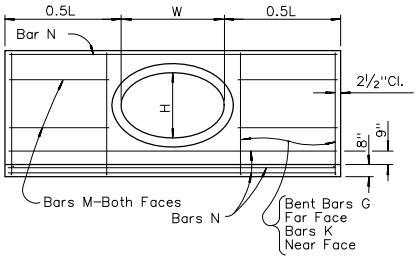

ELEVATION

SINGLE OVAL RCP
0° SKEW

NOTES:

1. CONCRETE SHALL BE CLASS A OR AA.
2. REINFORCING STEEL SHALL BE DEFORMED BARS WITH MAXIMUM SPACING OF 18" SET 2½" CLEAR OF SURFACE OF CONCRETE EXCEPT AS NOTED. BAR ENDS SHALL BE KEPT 1½" CLEAR OF SURFACE OF CONCRETE. REINFORCING BARS MAY BE CUT AND BENT IN FIELD.
3. FOOTINGS SHOWN ARE OF MINIMUM DEPTH AND SHALL BE EXTENDED IF SOIL IS UNSUITABLE OR LIABLE TO SCOUR.
4. CULVERT PIPES TO BE SET ON A SKEW SHALL BE MITERED WHEN HEADWALLS ARE CONSTRUCTED. WHEN HEADWALLS ARE NOT CONSTRUCTED THE PIPES SHALL NOT BE MITERED EXCEPT IN OVERFLOW SECTION.
5. DIMENSIONS X, Y, L, AND h TO REMAIN CONSTANT REGARDLESS OF MINOR VARIATIONS IN WALL THICKNESS DUE TO CLASS OF PIPE USED.
6. FOR ESTIMATING HEADWALL QUANTITIES ON SKEWED CULVERTS:
   0° to 10° – USE QUANTITIES FOR 0° SKEW.
   11° to 25° – USE QUANTITIES FOR 15° SKEW.
   26° to 40° – USE QUANTITIES FOR 30° SKEW.
   41° to 55° – USE QUANTITIES FOR 45° SKEW.
   OVER 55° – CALCULATE QUANTITIES REQUIRED.
   CULVERTS SHOULD BE INSTALLED ON 5° INCREMENTS WHERE IT IS FEASIBLE.

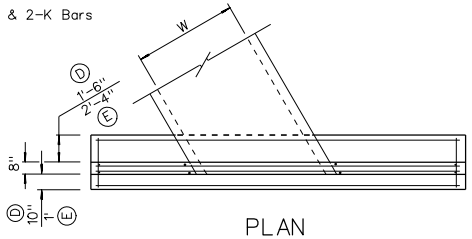

PLAN

NEVADA DEPARTMENT OF TRANSPORTATION

CULVERT HEADEALLS
68" x 43" OVAL RCP TO
91" x 58" OVAL RCP

Signed Original On File	R-2.7.2	(502)
CHIEF HYDRAULICS ENGINEER	ADOPTED 8/69	REVISION 8/97

R-33

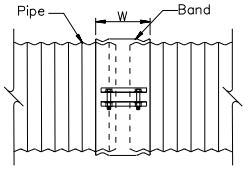

SIDE VIEW

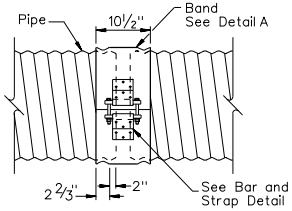

SIDE VIEW

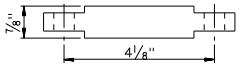

TOP VIEW

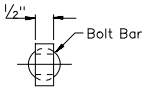

END VIEW

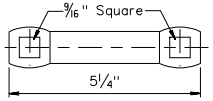

FRONT VIEW
BAR DETAIL

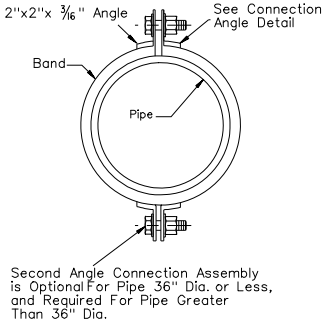

END VIEW

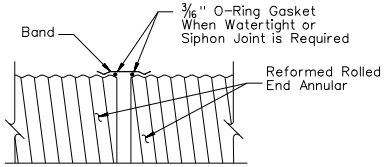

DETAIL A

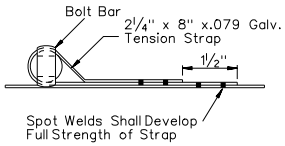

STRAP DETAIL

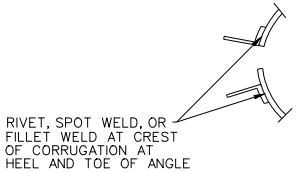

CONNECTION
ANGLE DETAIL

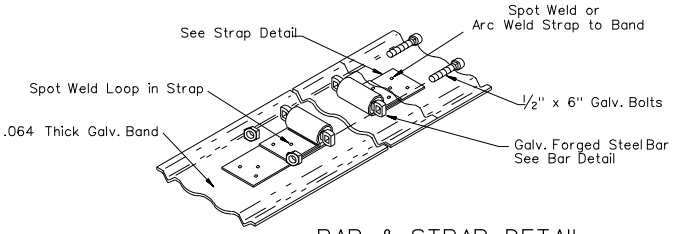

BAR & STRAP DETAIL

ALTERNATIVE ANNULAR
COUPLING BAND FOR
HCMP THRU 84"

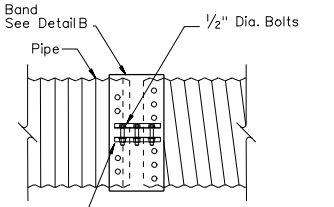

SIDE VIEW

Angle Connection Shown, Bar & Strap
Type May Be Used at Contractors Option

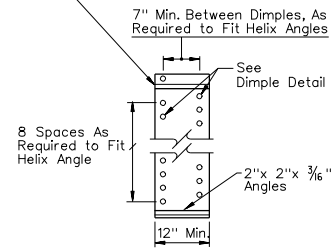

BAND DETAIL

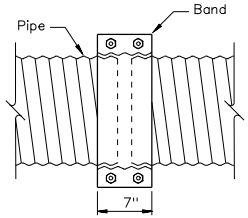

TOP VIEW

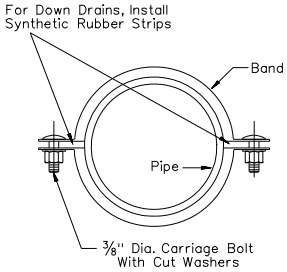

END VIEW

TWO PIECE
INTEGRAL FLANGE
DIE FORMED FOR USE ON
6", 8", AND 10" HCMP

To Be Used Only For Existing
Helically Corrugated Pipes

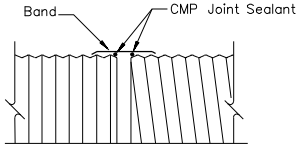

DETAIL B
For HCMP Down Drains & Slotted Drains

UNIVERSAL COUPLING BAND
FOR USE ON CMP THRU 36"
INCLUSIVE

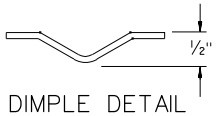

DIMPLE DETAIL

ANNULAR COUPLING BAND

CORRUGATION	PIPE SIZE	"W" (Min.)	1/2" BOLTS Each Connection
2 2/3" x1/2"	Thru 30"	7"	2
2 2/3" x1/2"	Thru 60"	12"	3
2 2/3" x1/2"	Thru 84"	24"	5
3"x1"	54" Thru 60"	14"	3
3"x1"	Thru 96"	26"	5

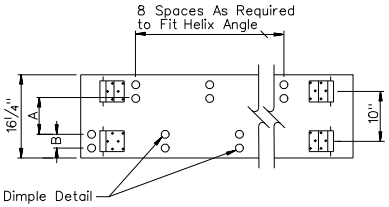

UNIVERSAL COUPLING BAND FOR USE
ON 42" THRU 60" CMP INCLUSIVE

Dimension A: As Required to Fit Helix Angle, 7" Min.
Dimension B: As Required to Fit Helix Angle, 2 2/3" Min.
One Piece Band Optional on 42" Diameter
Two Piece Band Required Above 42" Diameter.

COUPLING BAND FOR HELICAL WELD SEAM ONLY

NOTES:

1. ALL COUPLING BAND CONNECTING HARDWARE SHALL BE GALVANIZED.
2. FOR PIPE ARCHES USE SAME WIDTH BAND AS FOR ROUND PIPE OF EQUAL PERIPHERY.
3. FOR WATERTIGHT AND SIPHON JOINTS ON ALTERNATIVE ANNULAR COUPLING BAND, PLACE MASTIC SEALANT STRIP 1/8" THICK x 1 1/2" WIDE x 5" LONG IN LAP BETWEEN BANDS.
4. FOR ALTERNATIVE ANNULAR COUPLING BAND, 2 BAR AND STRAP ASSEMBLIES ARE REQUIRED FOR PIPE GREATER THAN 42" DIAMETER, OPTIONAL FOR SIZES LESS THAN 42".

NEVADA DEPARTMENT OF TRANSPORTATION

COUPLING BAND DETAILS
CMP AND PIPE ARCHES

Signed Original On File	R-2.8.1	(604)
CHIEF HYDRAULICS ENGINEER	ADOPTED 6/71	REVISION 8/97

*SEE SHEET R-2.8.1. FOR "W" DIMENSION

COUPLING TYPE	CORRUGATION	PIPE SIZE	* W OR A	THICKNESS PIPE WALL	THICKNESS BAND	BAR & STRAP: THICKNESS STRAP	BAR & STRAP: BOLTS (DIA.)	BAR & STRAP: BAR (DIA.)	BAR & STRAP: BAR YIELD STRENGTH (P.S.I.)	ANGLE: DIMENSIONS	ANGLE: BOLTS	ANGLE: RIVETS ANGLE TO BAND	ANGLE: SPOT WELDS ANGLE TO BAND	WEDGE & STRAP: THICKNESS STRAP	WEDGE & STRAP: THICKNESS WEDGE
TWO PIECE INTEGRAL FLANGE	1½" x ¼"	6" THRU 10"	7"	0.064 - 0.079	0.064						2 - ⅜"				
		12" THRU 18"	7" OR 12"												
UNIVERSAL	2⅔"X ½"	THRU 36"	12"	0.064 - 0.138	0.064									0.079	0.138
		THRU 36"	12"	0.064 - 0.138	0.064	0.079	½"	⅞"	32,000	2" x 2" x 3/16"	3 - ½"	3 - ⅜"	5 - ½"		
		42" THRU 60"	16¼"	0.064 - 0.168	0.064	DBL 0.079	½"	⅞"	32,000						
ANNULAR	2⅔"X ½"	THRU 36"	12"	0.064 - 0.138	0.064					2" x 2" x 3/16"	3 - ½"	3 - ⅜"	5 - ½"		
		42" THRU 60"	12"	0.064 - 0.079	0.064					2" x 2" x 3/16"	3 - ½"	3 - ⅜"	5 - ½"		
		42" THRU 60"	12"	0.064 - 0.168	0.064					2" x 2" x 5/16"	3 - ½"	5 - ⅜"			
		66" THRU 84"	24"	0.109 - 0.168	0.064					2" x 2" x 5/16"	5 - ½"	7 - ⅜"			
	3" X 1"	48" THRU 60"	14"	0.064 - 0.079	0.064					2" x 2" x 3/16"	3 - ½"	3 - ⅜"	5 - ½"		
		48" THRU 60"	14"	0.109	0.064					2" x 2" x 5/16"	3 - ½"	5 - ⅜"			
		66" THRU 120"	25"	0.064 - 0.079	0.064					2" x 2" x 5/16"	5 - ½"	9 - ⅜"			
CHANNEL	2⅔"X ½"	THRU 24"	¾"	0.064 - 0.079	0.079	0.079	½"	⅞"	32,000	2" x 2" x 5/16"	1 - ½"	SEE NOTE 8			
		30" THRU 42"	¾"	0.064 - 0.079	0.079	0.079	½"	⅞"	32,000						
		30" THRU 42"	1"	0.109	0.109	0.079	½"	⅞"	32,000						
		48" THRU 54"	1"	0.064 - 0.079	0.109	0.079	½"	⅞"	32,000						

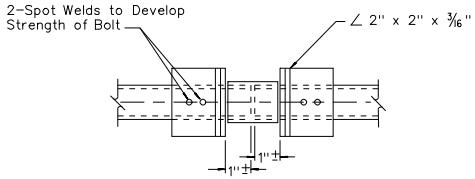

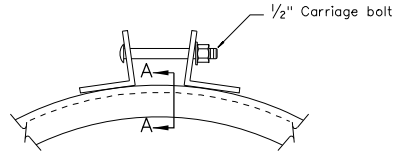

CHANNEL COUPLING BAND
FOR USE ON FLANGED END CMP
Channel Coupling Band Shall Be Two Piece

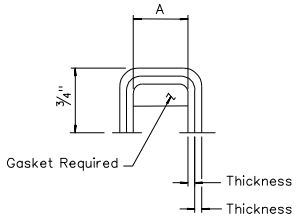

NOMINAL DIMENSIONS		
THICKNESS	A	FOR USE WITH CMP
0.079"	¾"	0.079" THICK OR LIGHTER
0.109"	1"	0.138" THICK OR HEAVIER

SECTION A-A

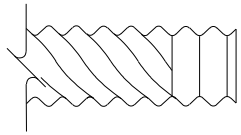

SPIRAL CMP
Reformed to Accept Universal, Annular, and Channel Couplers

NOTES:

1. ALL COUPLING BAND CONNECTION HARDWARE SHALL BE GALVANIZED OR ELECTROPLATED IN ACCORDANCE WITH STANDARD SPECIFICATIONS.
2. FOR PIPE ARCHES, USE SAME WIDTH BAND AS FOR ROUND PIPE OF EQUAL PERIPHERY.
3. TWO PIECE BAND IS REQUIRED FOR PIPE GREATER THAN 42" DIAMETER.
4. TENSION STRAP MAY BE CONNECTED TO BAND OR SHEET WITH EITHER SPOT WELDS OR FILLET WELDS THAT DEVELOP MINIMUM REQUIRED STRENGTH OR STRAP.
5. USE 1¼" GAGE LINE DIMENSION ON ATTACHED ANGLE LEG FOR RIVETS AND SPOT WELDS.
6. BAND THICKNESS SHALL NOT BE LESS THAN 3 STANDARD THICKNESSES LIGHTER THAN THE THICKNESS OF THE PIPE.
7. DIMENSIONS AND THICKNESS SHOWN ARE MINIMUM.
8. ANGLE 2" LONG WITH 0.064" X 2" STRAP.
9. FILLET WELDS OF EQUIVALENT STRENGTH MAY BE SUBSTITUTED FOR SPOT WELDS OR RIVETS.

NEVADA DEPARTMENT OF TRANSPORTATION

CMP COUPLING BAND DETAILS

Signed Original On File	R-2.8.2	(604)
CHIEF HYDRAULICS ENGINEER	ADOPTED 1/78	REVISION 8/97

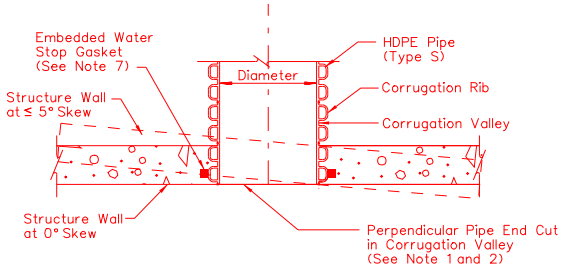

SECTION A–A

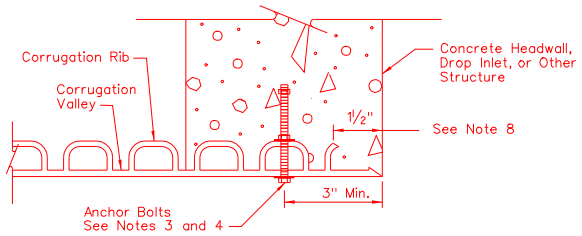

HALF–SECTION C–C

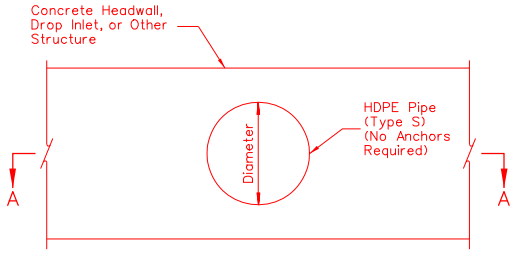

ELEVATION

HDPE PIPE CONNECTION FOR:
- 0° –5° Skew (D.I.'s and Other Enclosed Structures)
- 0° Skew (Headwalls)

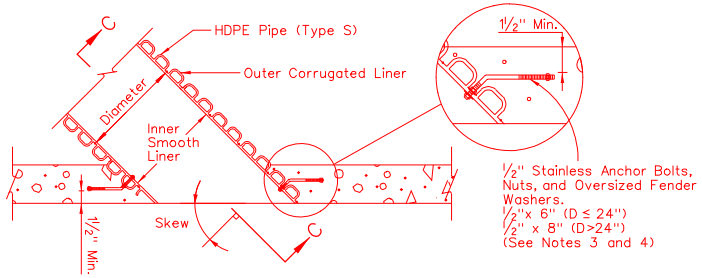

SECTION B–B

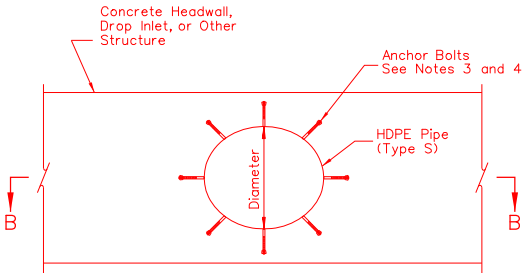

ELEVATION

HDPE PIPE CONNECTION FOR:
- ≥ 5° –45° Skew (D.I.'s and Other Enclosed Structures)
- All Skewed Headwalls Connections

NOTES:

1. FOR SKEW ANGLES ≤5 DEGREES, MAKE A PERPENDICULAR PIPE END-CUT AND ALLOW LONG SIDE OF PIPE TO PROJECT INTO STRUCTURE (EXCLUDING HEADWALLS). FOR HEADWALL CONNECTIONS, PIPE SHALL BE TRIMMED FLUSH WITH FACE OF HEADWALL FOR ALL SKEW ANGLES.
2. HDPE PIPE END-CUTS SHALL BE MADE IN THE CENTER OF NEAREST CORRUGATION VALLEY WHERE POSSIBLE. ADJUST NON-CRITICAL STRUCTURE LOCATIONS (3" MAX) SO STRUCTURE FACE CORRESPONDS WITH CORRUGATION VALLEY WHERE APPROPRIATE AND AS DIRECTED BY THE ENGINEER.
3. INSTALL ½" STAINLESS ANCHOR BOLTS, NUTS, AND OVERSIZED FENDER WASHERS 12" +/- O.C. AROUND CIRCUMFERENCE OF PIPE. ADJUST ANCHOR POSITION TO FALL IN EITHER THE VALLEY OR RIB OF THE CORRUGATED OUTER LINER. ATTACH BOLT ANCHORS PERPENDICULAR TO PIPE WALL AND BEND ANCHOR OUTSIDE OF PIPE ATTACHMENTS AS NECESSARY TO FALL INSIDE CONCRETE WALL WITH A MINIMUM OF 1½" CONCRETE COVER. NO DIRECT PAYMENT FOR ANCHOR BOLTS.
4. DO NOT OVER TIGHTEN NUTS. TIGHTEN NUTS AGAINST OVERSIZED WASHERS AND HDPE PIPE WALL WITHOUT CRUSHING OR DEFORMING PIPE WALL. STAKE OR PEEN NON-EMBEDDED NUTS TO PREVENT LOOSENING.
5. NO SPECIAL TREATMENT IS REQUIRED FOR CONNECTING HDPE PIPE TO CIRCULAR MANHOLES. MAKE PERPENDICULAR HDPE PIPE END-CUT IN CENTER OF CORRUGATION VALLEY.
6. FOR ALL OTHER HDPE PIPE TERMINATIONS (I.E. PLANE END PIPES, END-SECTIONS, ETC.), PIPE END-CUTS SHALL BE CENTERED IN THE NEAREST CORRUGATION VALLEY.
7. WATER-TIGHT CONNECTIONS CAN ONLY BE USED FOR 0° SKEWS. INSTALL EMBEDDED WATER STOP GASKET SUPPLIED BY MANUFACTURER ONLY WHEN WATER TIGHT JOINTS AND CONNECTIONS ARE SPECIFIED.
8. TRIM INNER PIPE LINER FLUSH WITH STRUCTURE WALL. BEVEL OUTER CORRUGATION RIBS 1½" FROM STRUCTURE WALL AROUND CIRCUMFERENCE OF THE PIPE TO ALLOW CONCRETE TO FILL VOID AT WALL FACE.

DESIGN NOTES:

D1. SKEW ANGLES BETWEEN HDPE PIPES AND STRUCTURES SHOULD BE AVOIDED. POSITION HDPE PIPES AND STRUCTURES AT 0 DEGREE SKEWS WHERE POSSIBLE AND PRACTICAL.

MAXIMUM HEIGHT OF COVER FOR HDPE PIPE (TYPE S)

PIPE DIAMETER	MINIMUM COVER*	MAXIMUM COVER**
12"–18"	1'	19'
24"–42"	1'	15'
48"	1'	14'

* TO BOTTOM OF FLEXIBLE PAVEMENT OR TOP OF RIGID PAVEMENT.

** BASED ON CLASS 2 BACKFILL MATERIAL AT 90% COMPACTION IN ACCORDANCE WITH ASTM D2321. CONSULT HYDRAULIC ENGINEER FOR LARGER FILL HEIGHT REQUIREMENTS.

NEVADA DEPARTMENT OF TRANSPORTATION

HDPE PIPE (CONNECTION DETAILS AND FILL HEIGHT TABLE)

Signed Original On File | R-2.9.1 | (502)

CHIEF HYDRAULICS ENGINEER | ADOPTED 5/09 | REVISION

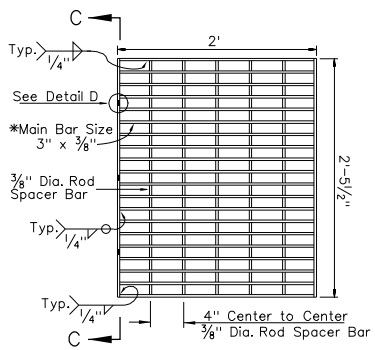

GRATE DETAIL

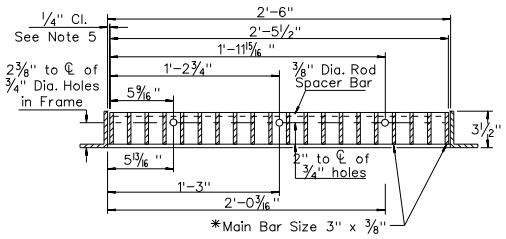

SECTION C-C
GRATE HOLE DETAIL

*20 Bars Equally Spaced 1 1/2" on Center

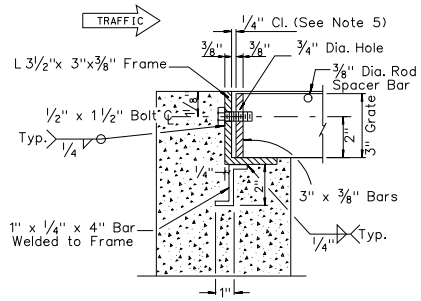

DETAIL D
GRATE HOLD-DOWN BOLT
INSTALL ONLY ON APPROACH SIDE OF GRATE & FRAME

NOTES:

1. ALL CONCRETE SHALL BE CLASS A OR AA.
2. REINFORCING BARS SHALL BE NO. 4 BARS WITH MAXIMUM SPACING AT 18" CENTERS. BARS TO BE EMBEDDED A MINIMUM OF 2" AND BAR ENDS MUST CLEAR SURFACE BY 1 1/2".
3. ALL EXPOSED CONCRETE EDGES SHALL BE CHAMFERED 1".
4. GRATE AND FRAME ANGLE TO BE WELDED AT ALL CONTACT POINTS.
5. 1/4" MAXIMUM CLEARANCE BETWEEN GRATE & FRAME ON EACH SIDE.
6. SLOPE CATCH BASIN FLOORS 10:1 FROM ALL DIRECTIONS TOWARD OUTLET PIPE. IF BASIN IS USED AS A JUNCTION SHAPE FLOWLINE(S) TO OUTLET PIPE, AND PROVIDE A 10:1 SLOPE TO FLOWLINE(S).
7. 12" DOWN DRAIN PIPE SHOWN, CAN BE UPSIZED TO 15" OR 18" WITH 3" OR 6" INCREASE IN THE BASIN DEPTH RESPECTIVELY. DOWN DRAIN PIPE TO BE CMP OR HDPE OR AS SPECIFIED.
8. IF OPTIONAL DRAIN IS INSTALLED, ADJUST REBAR TO ACCOMMODATE DRAIN
9. RIPRAP CAN BE INCREASED TO CLASS 300 WITH A 6" INCREASE IN RIPRAP THICKNESS.

QUANTITIES		
CONCRETE	REINFORCING STEEL	STRUCTURAL STEEL GRATE
0.46 CU. YD.	30 LBS.	245 LBS.
For Information Only Structural Steel Grate Includes Frame, Welded Angle, Grate & Spacer Bars		

DESIGN NOTES:

D1. ADDITIONAL PIPE/DRAIN PENETRATIONS FOR SLOTTED DRAIN, TRENCH DRAIN, OR PIPES MAY BE PLACED IN ANY WALL.

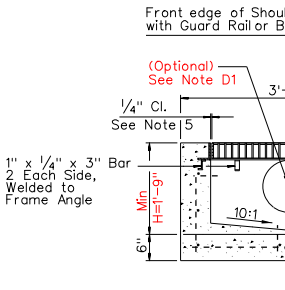

SECTION A-A

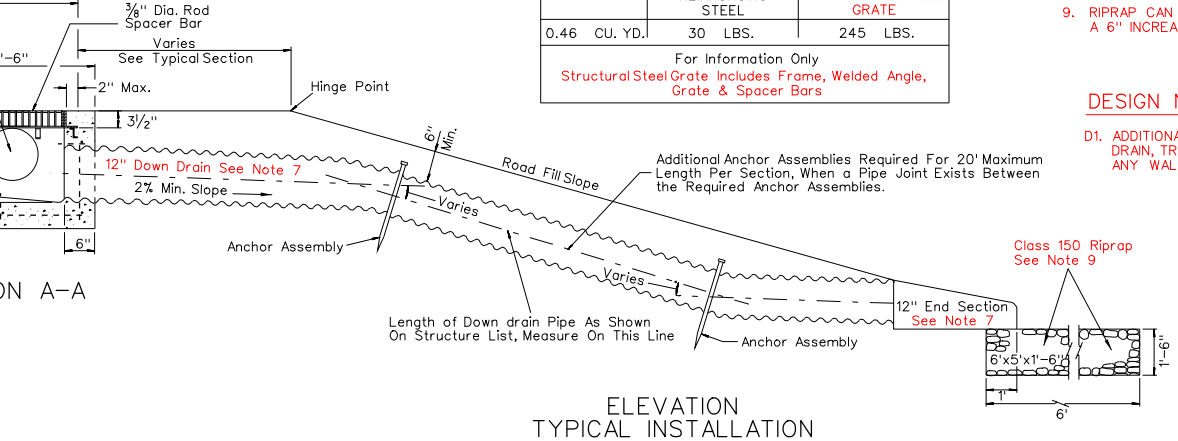

ELEVATION
TYPICAL INSTALLATION

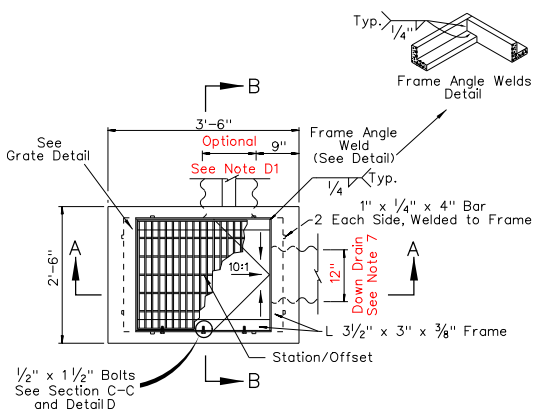

PLAN

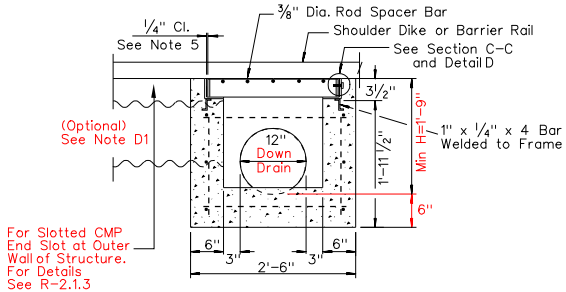

SECTION B-B

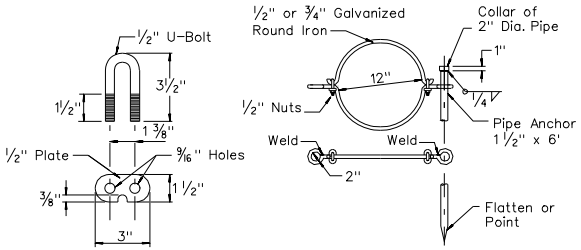

ANCHOR ASSEMBLY DETAIL

NEVADA DEPARTMENT OF TRANSPORTATION

EMBANKMENT PROTECTOR TYPE 5

Signed Original On File	R-3.1.2	(608)
CHIEF HYDRAULICS ENGINEER	ADOPTED 5/79	REVISION 5/09

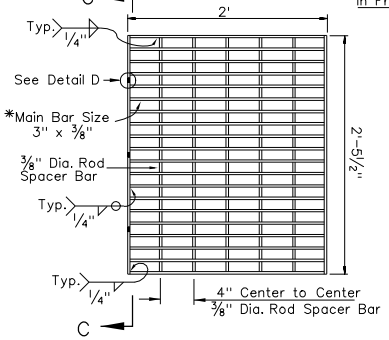

GRATE DETAIL

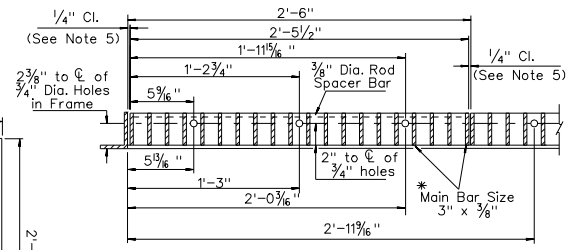

SECTION C-C
GRATE HOLE DETAIL

* 20 Bars Equally Spaced 1 1/2" on Center

QUANTITIES		
CONCRETE	REINFORCING STEEL	STRUCTURAL STEEL GRATE
0.78 CU. YD.	52 LBS.	456 LBS.
For Information Only Structural Steel Grate Includes Frame, Welded Angle, Grate & Spacer Bars.		

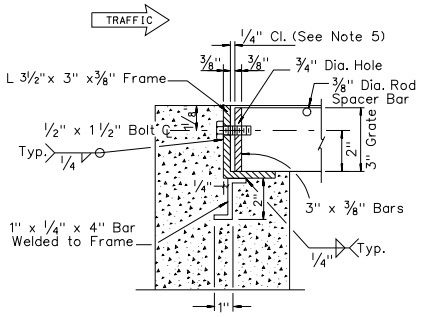

DETAIL D
GRATE HOLD-DOWN BOLT
INSTALL ONLY ON APPROACH SIDE OF GRATE & FRAME

NOTES:

1. ALL CONCRETE SHALL BE CLASS A OR AA.
2. REINFORCING BARS SHALL BE NO. 4 BARS WITH MAXIMUM SPACING AT 18" CENTERS. BARS TO BE EMBEDDED A MINIMUM OF 2" AND BAR ENDS MUST CLEAR SURFACE BY 1 1/2".
3. ALL EXPOSED CONCRETE EDGES SHALL BE CHAMFERED 1".
4. GRATE AND FRAME ANGLE TO BE WELDED AT ALL CONTACT POINTS.
5. 1/4" MAXIMUM CLEARANCE BETWEEN GRATE & FRAME ON EACH SIDE.
6. SLOPE CATCH BASIN FLOORS 10:1 FROM ALL DIRECTIONS TOWARD OUTLET PIPE. IF BASIN IS USED AS A JUNCTION SHAPE FLOWLINE(S) TO OUTLET PIPE, AND PROVIDE A 10:1 SLOPE TO FLOWLINE(S).
7. 12" DOWN DRAIN PIPE SHOWN, CAN BE UPSIZED TO 15" OR 18" WITH 3" OR 6" INCREASE IN THE BASIN DEPTH RESPECTIVELY. DOWN DRAIN PIPE TO BE CMP OR HDPE OR AS SPECIFIED.
8. IF OPTIONAL DRAIN IS INSTALLED, ADJUST REBAR TO ACCOMIDATE DRAIN.
9. RIPRAP CAN BE INCREASED TO CLASS 300 WITH A 6" INCREASE IN RIPRAP THICKNESS.

DESIGN NOTES:

D1. ADDITIONAL PIPE/DRAIN PENETRATIONS FOR SLOTTED DRAIN, TRENCH DRAIN, OR PIPES MAY BE PLACED IN ANY WALL.

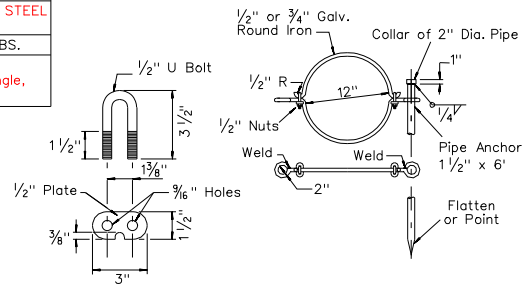

ANCHOR ASSEMBLY DETAIL

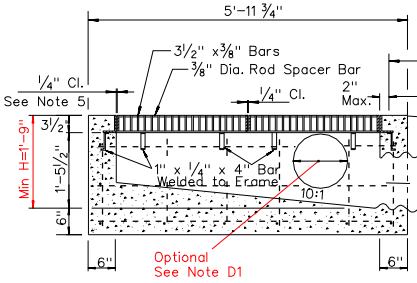

SECTION A-A

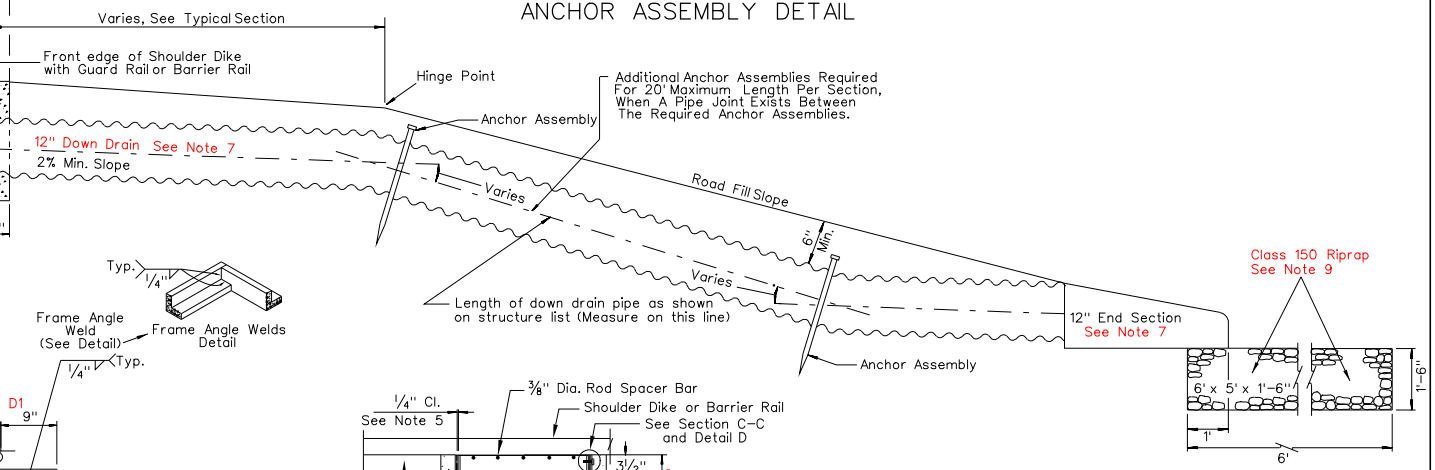

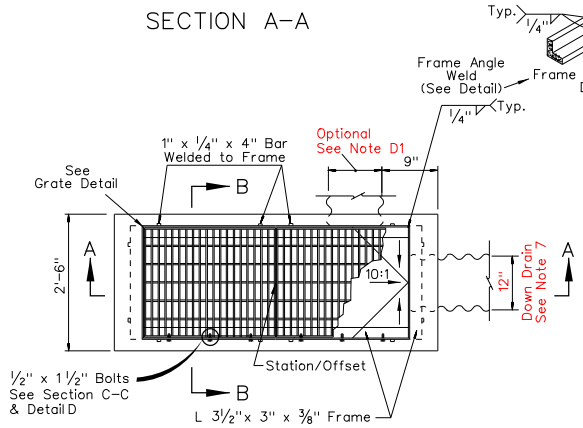

PLAN

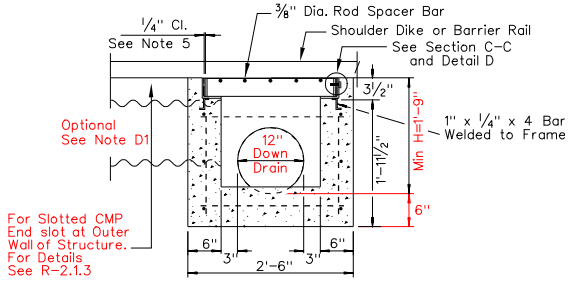

SECTION B-B

NEVADA DEPARTMENT OF TRANSPORTATION

EMBANKMENT PROTECTOR
(TYPE 5-2G)

Signed Original On File	R-3.1.3	(608)
CHIEF HYDRAULICS ENGINEER	ADOPTED 5/79	REVISION 5/09

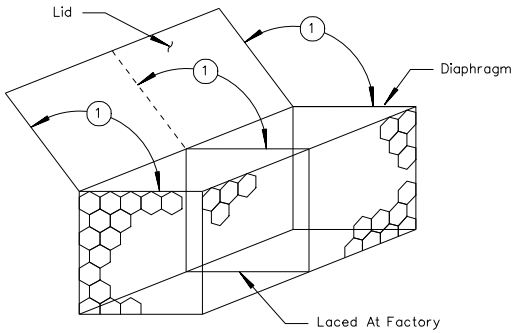

LACING: SINGLE BASKET

① When Full, Close Lid and Lace to Basket. Optional Wire Ring Fasteners Allowed As Per Special Provisions.

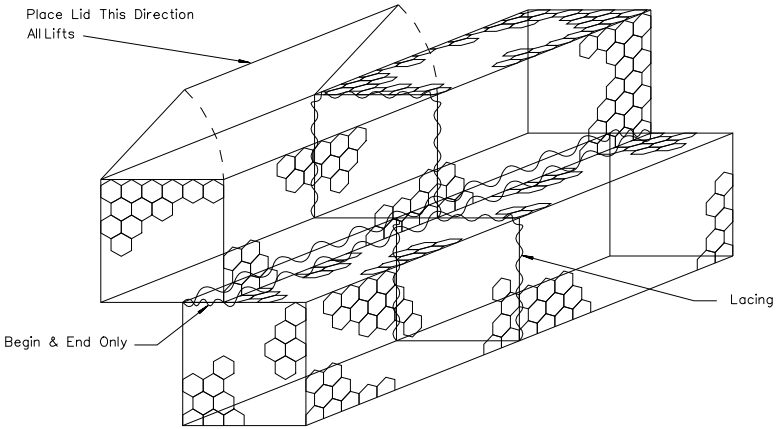

LACING: BASKET TO BASKET

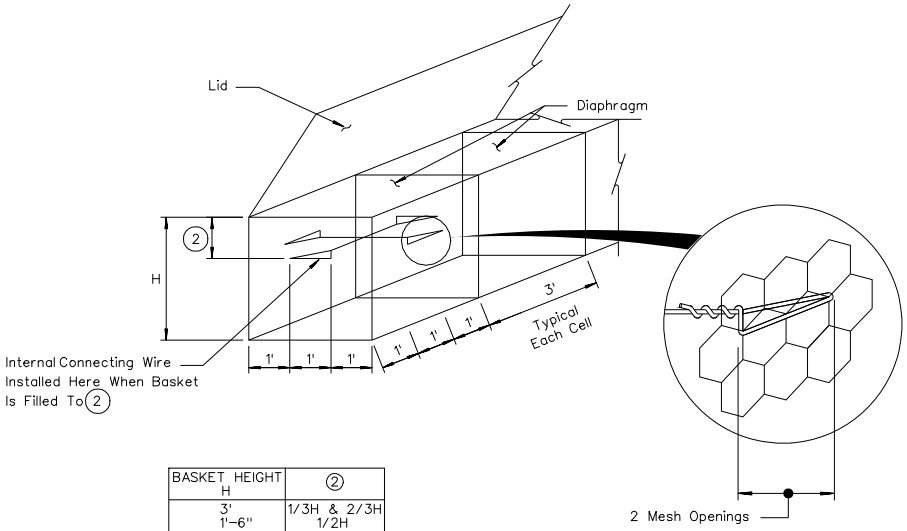

BASKET HEIGHT H	②
3'	1/3H & 2/3H
1'-6"	1/2H
1'	NONE

INTERNAL CONNECTING WIRE DETAIL
FOR WIRE MESH GABIONS

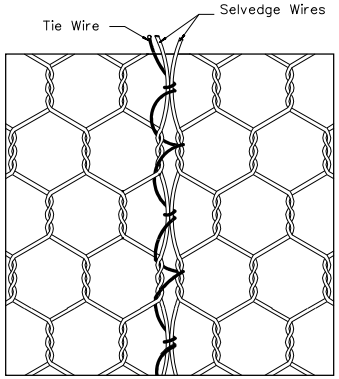

WIRE MESH LACING DETAIL

NEVADA DEPARTMENT OF TRANSPORTATION

GABIONS LACING DETAIL

Signed Original On File	R-3.1.4 (610)	
CHIEF HYDRAULICS ENGINEER	ADOPTED 10/85	REVISION 5/09

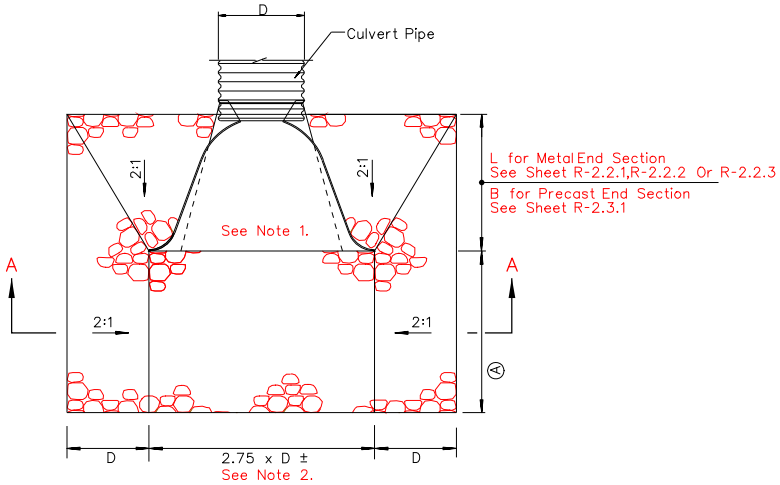

PLAN

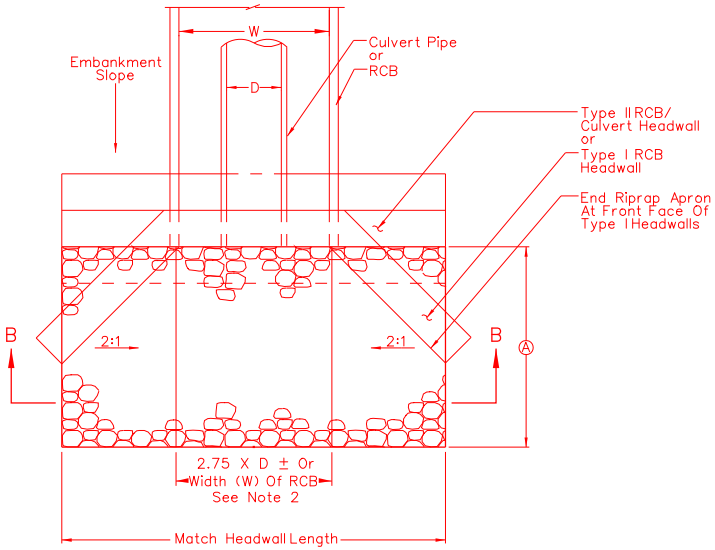

PLAN

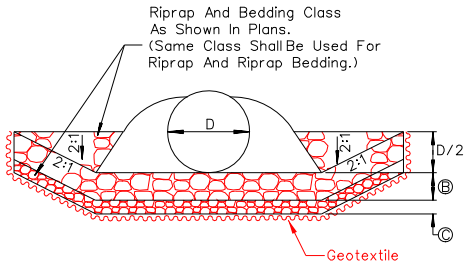

SECTION A-A

RIPRAP APRON
FOR END SECTIONS

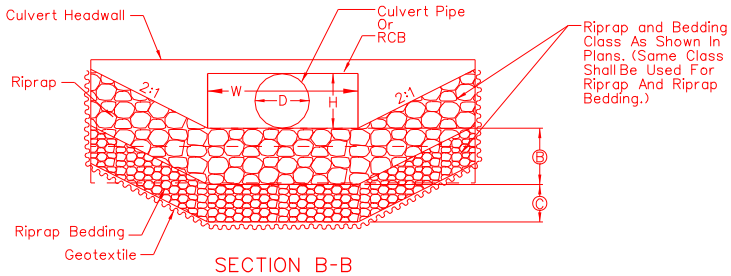

SECTION B-B

RIPRAP APRON
FOR HEADWALLS

CULVERT SIZE	Ⓐ
12" to 36" PIPE	*3D
42" to 84" PIPE	*4D
RCB	*4H

*OR AS SPECIFIED

RIPRAP AND BEDDING CLASS	Ⓑ in.	Ⓒ in.
150	12	8
300	24	8
400	36	10
550	48	12
700	60	12
900	72	24

GENERAL NOTES:

1. WHEN NO END SECTION IS USED, ADDITIONAL RIPRAP SHALL BE AS REQUIRED BY THE HYDRAULIC ENGINEER.
2. FOR MULTIPLE PIPE OR RCB INSTALLATIONS, THIS DIMENSION SHALL BE ADJUSTED ACCORDING TO THE PIPE SEPARATION INFORMATION ON SHEET R-2.1.1. OR IN THE HEADWALL DETAILS.
3. TRANSITION END OF RIPRAP APRON TO DOWN STREAM CHANNEL. APRON MAY BE SKEWED AND DIMENSIONS ADJUSTED TO MATCH AND LINE UP WITH DOWN STREAM CHANNEL.

NEVADA DEPARTMENT OF TRANSPORTATION

RIPRAP APRON FOR CULVERT HEADWALLS, TYPE 1 & 2 RCB HEADWALLS, AND END SECTIONS

Signed Original On File	R-3.1.5	(610)
CHIEF HYDRAULICS ENGINEER	ADOPTED 5/09	REVISION

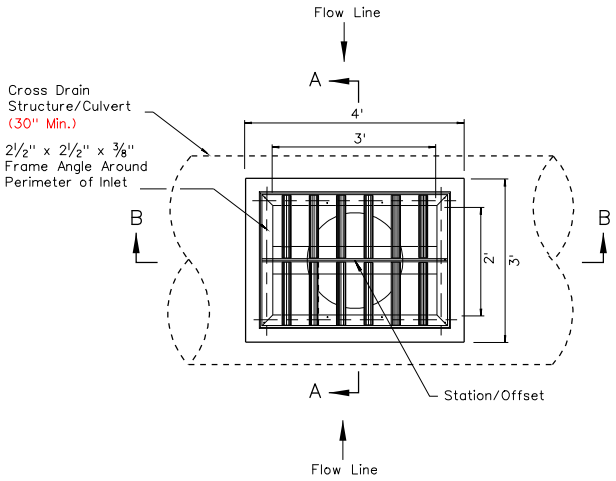

PLAN

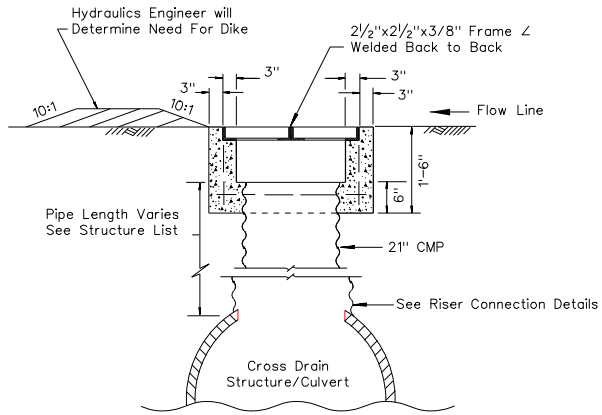

SECTION A-A

NOTES:

1. ALL CONCRETE SHALL BE CLASS A OR AA.
2. REINFORCING BARS SHALL BE NO. 4 BARS WITH MAXIMUM SPACING AT 18" CENTERS. BARS TO BE EMBEDDED A MINIMUM OF 2" AND BAR ENDS MUST CLEAR CONCRETE SURFACES BY 1½".
3. ALL EXPOSED CONCRETE EDGES SHALL BE CHAMFERED 1".
4. STRUCTURAL STEEL WEIGHT INCLUDES 2" PIPE AND THE 2½" x 2½" x ⅜" FRAME ANGLES.
5. STATION/OFFSET DISTANCE LISTED IN PLANS IS MEASURED TO THE CENTER OF GRATE.
6. PACK WITH OAKUM OR ASPHALT SOAKED BURLAP. OAKUM IS STRANDED HEMP USED IN SEALING PIPE JOINTS. ASPHALT SOAKED BURLAP SHALL CONFORM TO ASTM D1327, USING ASPHALT CONFORMING TO ASTM D449, TYPE II.
7. CONCRETE COLLAR CAN BE POURED SQUARE OR ROUND.

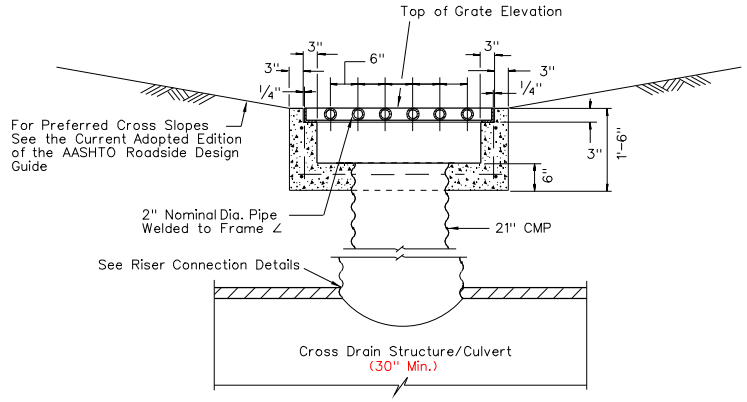

SECTION B-B

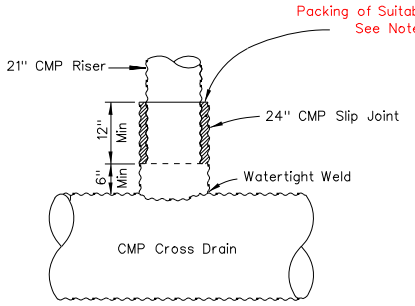

RISER CONNECTION TO CMP CROSS DRAIN

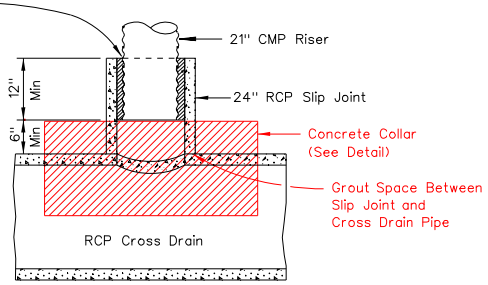

RISER CONNECTION TO RCP CROSS DRAIN

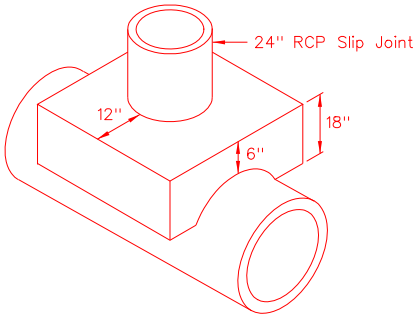

CONCRETE COLLAR DETAIL

QUANTITIES, FOR INFORMATION ONLY		
CONCRETE	REINF. STEEL	STRUCT. STEEL
0.36 Cu. Yd.	23 lbs.	170 lbs.

NEVADA DEPARTMENT OF TRANSPORTATION

PIPE RISER INLET
TYPE 3

Signed Original On File	R-4.1.1	(609)
CHIEF HYDRAULICS ENGINEER	ADOPTED 8/69	REVISION 5/09

BILL OF MATERIALS (RCP HDPE CMP)

PIPE SIZE (INCH)	SINGLE (ONE GRATE)					DOUBLE (TWO GRATES)					TRIPLE (THREE GRATES)				
	* CONCRETE (CY)		* REINF. (LB.)			* CONCRETE (CY)		* REINF. (LB.)			* CONCRETE (CY)		* REINF. (LB.)		
	BASE QUAN. (H MIN.)	ADD RATE (CY/FT)	BASE QUAN. (H MIN.)	ADD RATE (CY/FT)	STR STEEL (LB)	BASE QUAN. (H MIN.)	ADD RATE (CY/FT)	BASE QUAN. (H MIN.)	ADD RATE (CY/FT)	STR STEEL (LB)	BASE QUAN. (H MIN.)	ADD RATE (CY/FT)	BASE QUAN. (H MIN.)	ADD RATE (CY/FT)	STR STEEL (LB)
≤15	0.71	0.19	36	10	211	1.06	0.26	50	13	397	1.41	0.33	70	17	583
18	0.89	0.20	40	10	306	1.31	0.28	56	13	574	1.72	0.35	77	18	842
24	1.08	0.22	58	12	349	1.56	0.30	80	15	652	2.04	0.37	105	20	956
30	1.28	0.24	63	12	390	1.83	0.31	86	16	729	2.38	0.39	113	20	1068
36	1.50	0.26	67	13	524	2.11	0.33	92	16	980	2.72	0.41	120	21	1435
42	1.71	0.28	90	15	575	2.39	0.35	120	18	1073	3.07	0.43	154	22	1571
48	1.94	0.30	95	15	707	2.68	0.37	127	18	1329	3.42	0.44	163	23	1951

*The Concrete And Reinforcing Quantities Are Based On The H Min. Shown. Increase The Concrete And Reinforcing Base Quantity By The Corresponding Add Rate (Per Foot Of Increased H) If The H Specified Is Larger Than H Min.

TABLE OF DIMENSIONS (RCP HDPE CMP)

PIPE SIZE (INCH)	A	H Min. (FT)	MAIN BARS (INCH)	FRAME ANGLES (INCH)	FRAME BARS (INCH)	L (FT)		
						SINGLE GRATE	DOUBLE GRATE	TRIPLE GRATE
≤ 15	2'	2.50	3½ X ⅜	4 X 3 X ⅜	4 X ⅜	2	4	6
18	2' 6"	3.00	4½ X ⅜	5 X 3 X ⅜	5 X ⅜	2	4	6
24	3'	3.50	4½ X ⅜	5 X 3 X ⅜	5 X ⅜	2	4	6
30	4'	4.00	4½ X ⅜	5 X 3 X ⅜	5 X ⅜	2	4	6
36	4'	4.50	5½ X ⅜	6 X 3½ X ⅜	6 X ⅜	2	4	6
42	5'	5.00	5½ X ⅜	6 X 3½ X ⅜	6 X ⅜	2	4	6
48	5'	5.50	5½ X 7/16	6 X 3½ X ⅜	6 X ⅜	2	4	6

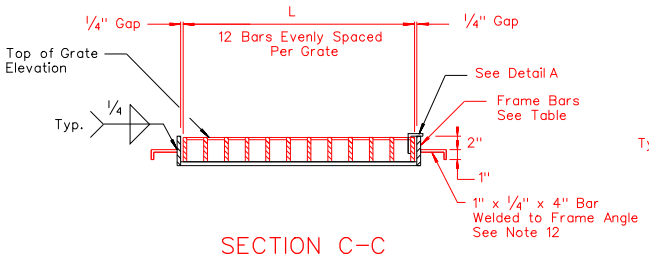

SECTION C-C

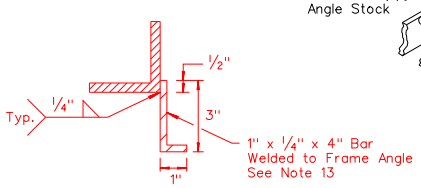

TAB DETAIL

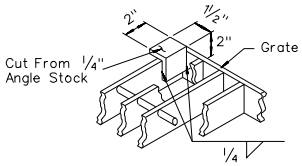

DETAIL A

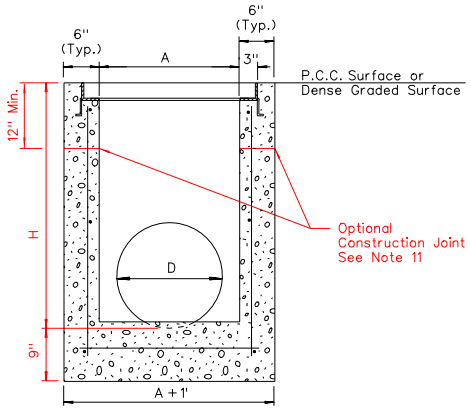

SECTION A-A

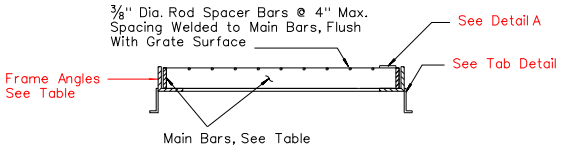

SECTION B-B

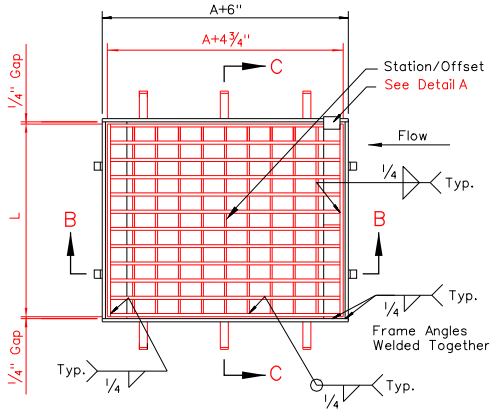

GRATE AND FRAME

NOTES:

1. ALL CONCRETE SHALL BE CLASS A OR AA.
2. REINFORCING STEEL SHALL BE NO.4 BARS WITH MAXIMUM SPACING AT 18" CENTERS, WIRED TIGHTLY AT ALL INTERSECTIONS AND EMBEDDED 2" CLEAR OF ALL CONCRETE SURFACES.
3. EXPOSED EDGES OF CONCRETE SHALL BE CHAMFERED 1".
4. DIMENSIONS MAY BE VARIED TO FIT LOCAL CONDITIONS IF ORDERED BY THE ENGINEER.
5. COMMERCIAL PREFABRICATED GRATINGS APPROVED BY THE BRIDGE DIVISION MAY BE USED IN LIEU OF THE FIELD-WELDED GRATING SHOWN ABOVE.
6. EXTREME LOW COVER SITUATIONS TO BE REVIEWED BY HYDRAULICS ENGINEER.
7. SLOPE CATCH BASIN FLOORS 10:1 FROM ALL DIRECTIONS TOWARD OUTLET PIPE. IF BASIN IS USED AS A JUNCTION, SHAPE FLOW LINE(S) TO OUTLET PIPE AND PROVIDE A 10:1 SLPOE TO FLOW LINE(S).
8. SEE SHEET R-2.9.1 FOR DETAILS IF CONNECTING HDPE PIPE.
9. A SINGLE TYPE 2 DROP INLET SHALL BE CONSTRUCTED UNLESS A DOUBLE OR TRIPLE IS SPECIFIED.
10. SINGLE GRATE CONFIGURATION SHOWN FOR CLARITY. OUTSIDE DIMENSIONS OF EACH GRATE SHALL MEASURE 2' BY A+4¾".
11. RUN REBAR CONTINUOUS THRU CONSTRUCTION JOINT. JOINT MUST BE A MINIMUM OF 3" FROM HORIZONTAL BARS.
12. WELD ONE TAB ON ℄ OF GRATE AND REMAINING TWO TABS 6" FROM EDGE OF FRAME. SIX TABS PER INLET, THREE TABS ON EACH SIDE
13. WELD TABS 6" FROM EDGE OF FRAME. FOUR TABS PER GRATE, TWO ON EACH SIDE.

DESIGN NOTES:

D1. ADDITIONAL PIPE PENETRATIONS MAY BE PLACED IN ANY WALL.

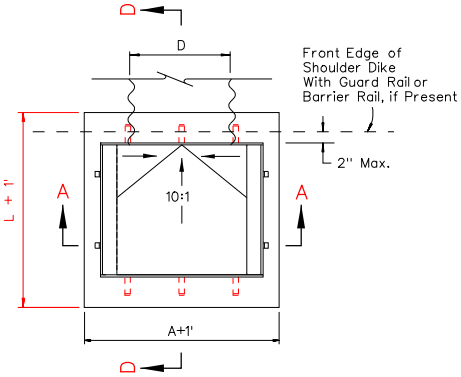

PLAN

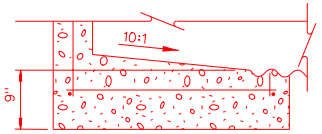

SECTION D-D

NEVADA DEPARTMENT OF TRANSPORTATION

TYPE 2 DROP INLET

Signed Original On File	R-4.2.1	(609)
CHIEF HYDRAULICS ENGINEER	ADOPTED 11/70	REVISION 5/09

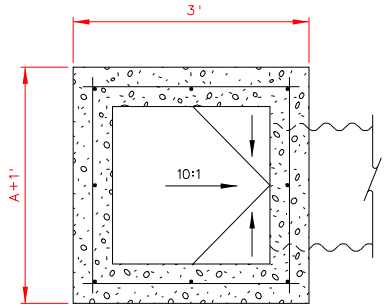

SECTION C-C

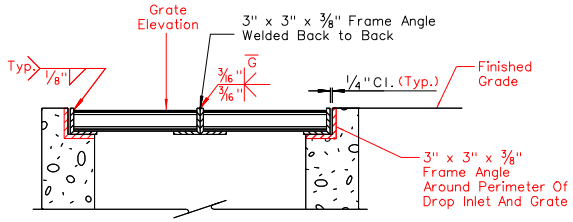

SECTION B-B

NOTES:

1. ALL CONCRETE SHALL BE CLASS A OR AA.
2. REINFORCING STEEL SHALL BE NO. 4 BARS WITH MAXIMUN SPACING AT 18" CENTERS, WIRED TIGHTLY AT ALL INTERSECTIONS AND EMBEDDED 2" CLEAR OF ALL CONCRETE SURFACES.
3. EXPOSED EDGES OF CONCRETE SHALL BE CHAMFERED 1".
4. STRUCTURAL STEEL WEIGHT INCLUDES THE 2" NORMAL DIAMETER PIPE STANDARD WEIGHT AND 3"X3"X3/8" FRAME ANGLES.
5. FOR 2" NOMINAL DIAMETER PIPE SEE ASTM A53.
6. SEE SHEET R-2.9.1 FOR DETAILS IF CONNECTING HDPE PIPE.
7. SLOPE CATCH BASIN FLOORS 10:1 FROM ALL DIRECTIONS TOWARD OUTLET PIPE. IF BASIN IS USED AS A JUNCTION, SHAPE FLOW LINE(S) TO OUTLET PIPE AND PROVIDE A 10:1 SLOPE TO FLOW LINE(S).
8. RUN REBAR CONTINUOUS THRU CONSTRUCTION JOINT. JOINT MUST BE A MIN. 3" FROM HORIZONTAL BARS.

DESIGN NOTES:

D1. ADDITIONAL PIPE PENETRATIONS MAY BE PLACED IN ANY WALL.

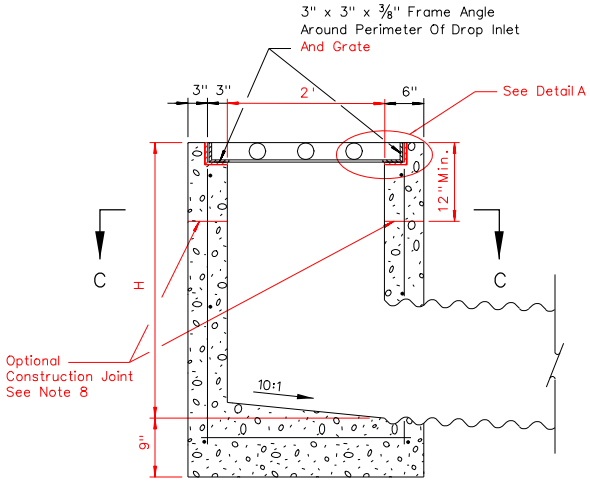

SECTION A-A

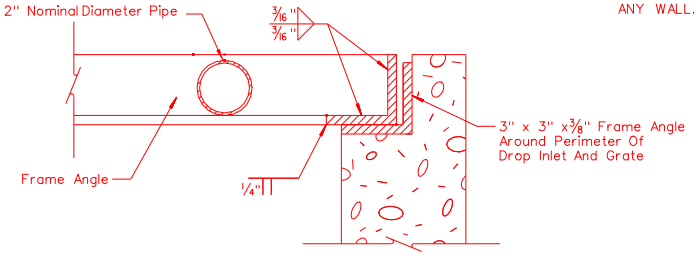

DETAIL A

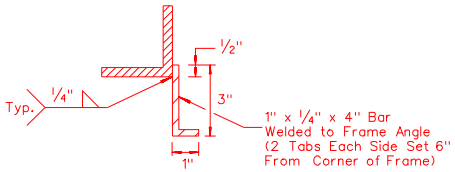

TAB DETAIL

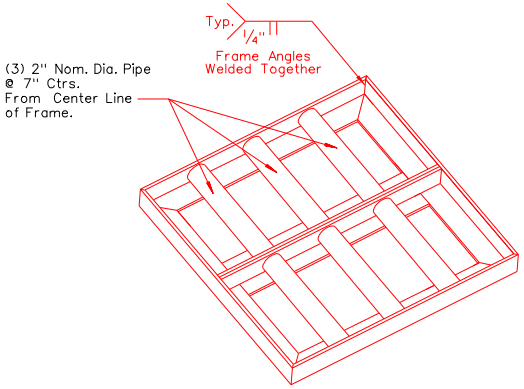

GRATE DETAIL

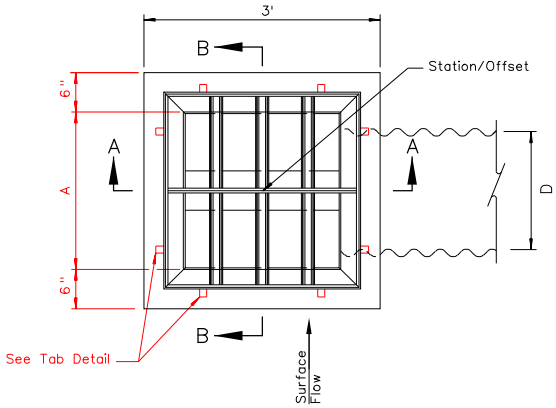

PLAN

	PIPE SIZE (INCH)	A	H Min. (FT)	CONCRETE (CU. YD.) BASE QUAN. (H Min.)	CONCRETE (CU. YD.) ADD RATE (CU. YD./FT)	REINFORCING (LB) BASE QUAN. (H Min.)	REINFORCING (LB) ADD RATE (LB/FT)	STRUCTURAL STEEL (LB)
RCP	15"	2'	2.50	0.71	0.19	36	10	200
	18"	2' 6"	3.00	0.89	0.20	40	10	220
	24"	3'	3.50	1.08	0.22	58	12	240
HDPE	30"	3' 6"	4.00	1.28	0.24	63	12	260
	36"	4'	4.50	1.50	0.26	67	13	280
CMP	42"	4' 6"	5.00	1.71	0.28	90	15	300
	48"	5'	5.50	1.94	0.30	95	15	319

The Concrete And Reinforcing Quantities Are Based On The H Min. Shown. Increase The Concrete And Reinforcing Base Quantity By The Corresponding Add Rate (Per Foot Of Increased H) If The H Specified Is Larger Than H Min.

NEVADA DEPARTMENT OF TRANSPORTATION

TYPE 2A
DROP INLET

Signed Original On File | R-4.2.1.1 | (609)

CHIEF HYDRAULICS ENGINEER | ADOPTED 11/70 | REVISION 5/09

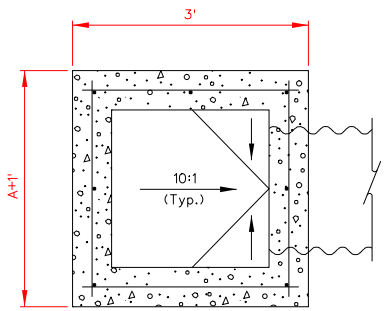

SECTION C-C

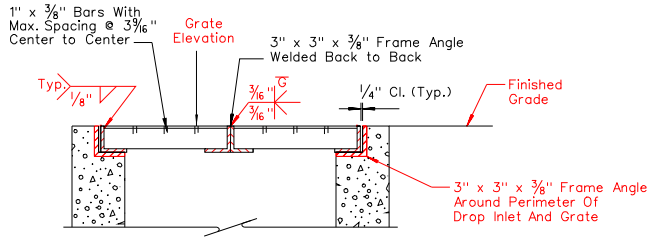

SECTION B-B

NOTES:

1. ALL CONCRETE SHALL BE CLASS A OR AA.
2. REINFORCING STEEL SHALL BE NO. 4 BARS WITH MAXIMUN SPACING AT 18" CENTERS, WIRED TIGHTLY AT ALL INTERSECTIONS AND EMBEDDED 2" CLEAR OF ALL CONCRETE SURFACES.
3. EXPOSED EDGES OF CONCRETE SHALL BE CHAMFERED 1".
4. STRUCTURAL STEEL WEIGHT INCLUDES THE 2" NORMAL DIAMETER PIPE STANDARD WEIGHT AND 3"X3"X3/8" FRAME ANGLES.
5. FOR 2" NOMINAL DIAMETER PIPE SEE ASTM A53.
6. SEE SHEET R-2.9.1 FOR DETAILS IF CONNECTING HDPE PIPE.
7. SLOPE CATCH BASIN FLOORS 10:1 FROM ALL DIRECTIONS TOWARD OUTLET PIPE. IF BASIN IS USED AS A JUNCTION, SHAPE FLOW LINE(S) TO OUTLET PIPE AND PROVIDE A 10:1 SLOPE TO FLOW LINE(S).
8. RUN REBAR CONTINUOUS THRU CONSTRUCTION JOINT. JOINT MUST BE A MIN. 3" FROM HORIZONTAL BARS.

DESIGN NOTES:

D1. ADDITIONAL PIPE PENETRATIONS MAY BE PLACED IN ANY WALL.

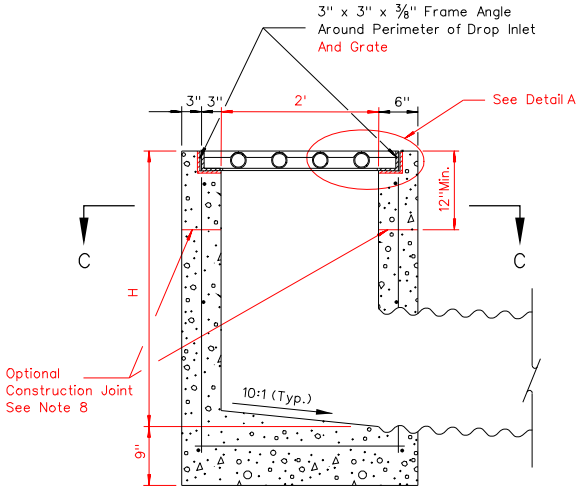

SECTION A-A

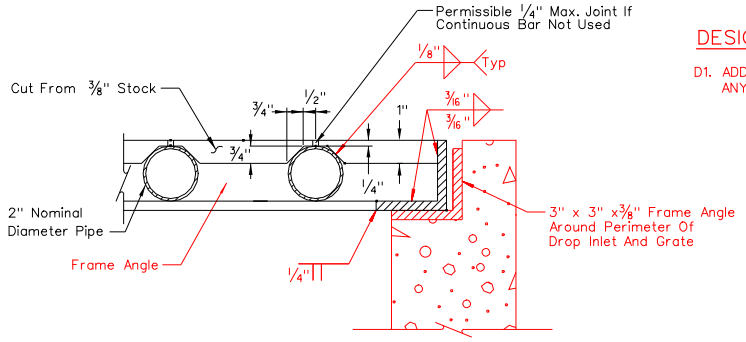

DETAIL A

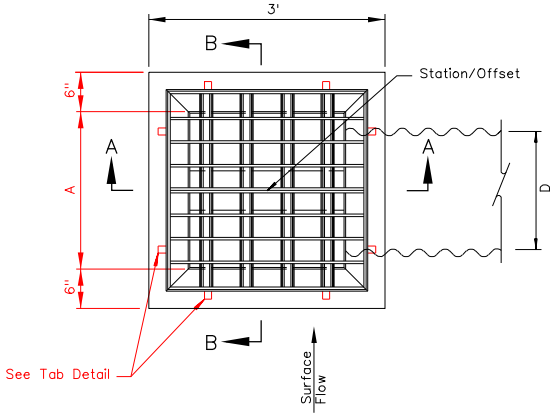

PLAN

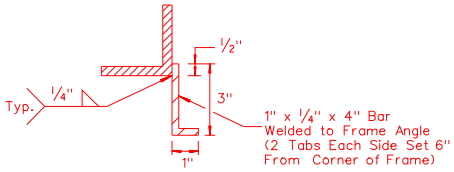

TAB DETAIL

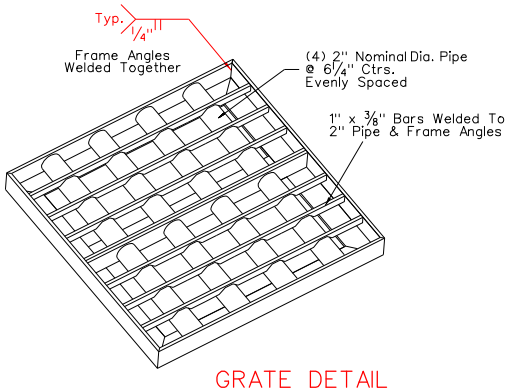

GRATE DETAIL

	PIPE SIZE (INCH)	A	H Min. (FT)	CONCRETE (CU. YD.) BASE QUAN. (H Min.)	CONCRETE (CU. YD.) ADD RATE (CU. YD./FT)	REINFORCING (LB) BASE QUAN. (H Min.)	REINFORCING (LB) ADD RATE (LB/FT)	STRUCTURAL STEEL (LB)
RCP	15"	2'	2.50	0.71	0.19	36	10	215
HDPE	18"	2' 6"	3.00	0.89	0.20	40	10	239
HDPE	24"	3'	3.50	1.08	0.22	58	12	262
HDPE	30"	3' 6"	4.00	1.28	0.24	63	12	286
HDPE	36"	4'	4.50	1.50	0.26	67	13	309
HDPE	42"	4' 6"	5.00	1.71	0.28	90	15	333
CMP	48"	5'	5.50	1.94	0.30	95	15	356

The Concrete And Reinforcing Quantities Are Based On The H Min. Shown. Increase The Concrete And Reinforcing Base Quantity By The Corresponding Add Rate (Per Foot Of Increased H) If The H Specified Is Larger Than H Min.

NEVADA DEPARTMENT OF TRANSPORTATION

TYPE 2B
DROP INLET

Signed Original On File | R-4.2.2 | (609)

CHIEF HYDRAULICS ENGINEER | ADOPTED 11/06 | REVISION 5/09

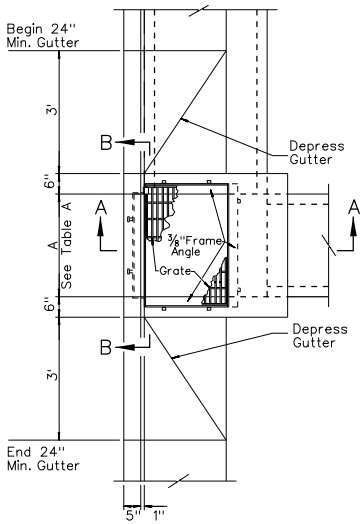

PLAN

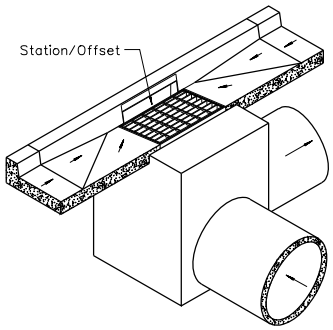

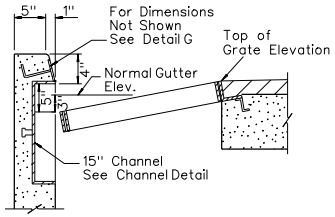

DETAIL F

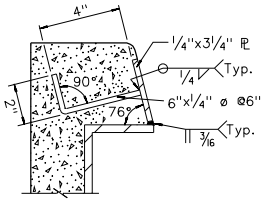

DETAIL G

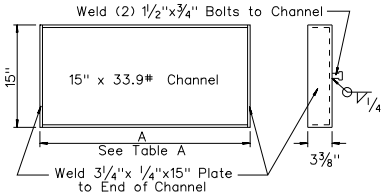

CHANNEL DETAIL

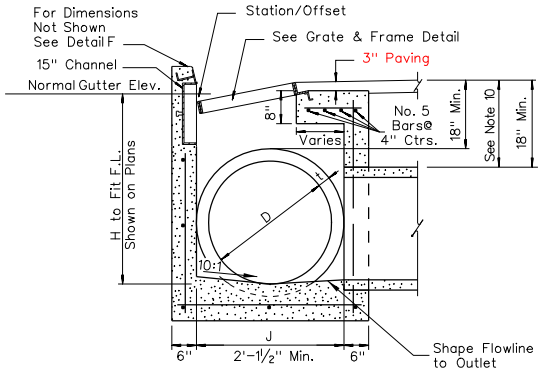

S FOR CMAP
D FOR CMP

D+6" FOR RCP/HDPE 24" OR LESS
D+2t FOR RCP/HDPE 30" OR MORE
S+2t FOR LO-HED RCP

SECTION A-A
(FOR CMAP, CMP, RCP, HDPE & LO-HED RCP)

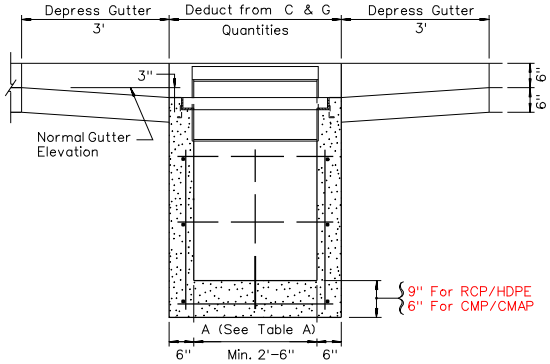

S FOR CMAP
D FOR CMP

D+6" FOR RCP/HDPE 42" OR LESS
D+2t FOR RCP/HDPE 48" OR MORE
S+6" FOR LO-HED RCP 29"x45" OR LESS
S+2t FOR LO-HED RCP 34"x53" OR MORE

SECTION B-B
(FOR CMAP, CMP, RCP, HDPE & LO-HED RCP)

SHEET 1 OF 2

NEVADA DEPARTMENT OF TRANSPORTATION

DROP INLET
TYPE 3

Signed Original On File	R-4.2.3	(609)
CHIEF HYDRAULICS ENGINEER	ADOPTED 10/85	REVISION 5/09

TABLE A – STRUCTURAL STEEL

PIPE SIZE				A	MAIN BARS	FRAME ANGLES	FRAME BAR	GRATE LBS.	FRAME LBS.	CHANNEL & PLATES, LBS.	TOTAL LBS.
CMAP	CMP	RCP/ HDPE	LO-HED								
29" x 18"	30"	24"	14" x 23"								
OR LESS	OR LESS	OR LESS	OR LESS	2'-6"	4½" x ⅜"	5" x 3" x ⅜"	5" x ⅜"	229	88	93	409
36" x 22"	36"	30"	19" x 30"	3'	4½" x ⅜"	5" x 3" x ⅜"	5" x ⅜"	265	96	107	468
43" x 27"	42"	36"	22" x 34"	3'-6"	4½" x ⅜"	5" x 3" x ⅜"	5" x ⅜"	300	104	126	530
	48"	42"	27" x 34"	4'	5½" x ⅜"	6" x 3½" x ⅜"	6" x ⅜"	409	134	143	685
	54"		29" x 45"	4'-6"	5½" x ⅜"	6" x 3½" x ⅜"	6" x ⅜"	451	144	160	755

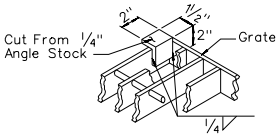

TAB DETAIL

TABLE B

MAXIMUM H		
CMAP	J OR A	H
29" x 18" OR LESS 36" x 22" 43" x 27"	30" OR LESS 36" 42" 48" 54" 60"	21' 16' 12' 9' 7' 7' (WITH #4 BARS @ 12" CENTERS)

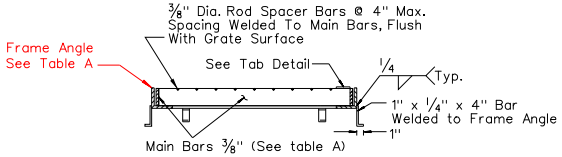

SECTION C–C

NOTES:

1. ALL CONCRETE SHALL BE CLASS A OR AA.
2. ALL REINFORCING STEEL SHALL BE TIGHTLY WIRED AND EMBEDDED 1½" CLEAR OF CONCRETE SURFACE. EXCEPT AS NOTED, ALL REINFORCING SHALL BE NO. 4 BARS WITH MAXIMUM SPACING OF 12" CENTERS, FOR ALL VALUES OF H TO THE MAXIMUM AS SHOWN IN TABLE B. IF H EXCEEDS THESE MAXIMUMS, DROP INLET WILL REQUIRE SPECIAL DESIGN.
3. EXPOSED EDGES OF CONCRETE SHALL BE CHAMFERED 1".
4. WHERE PIPE INTERSECTS DROP INLET ON A 12° OR LARGER SKEW INCREASE J TO $\frac{J}{\cos \text{SKEW } \angle}$, REDESIGN FOR SKEWS AT A.
5. WHERE PIPE INTERSECTS DROP INLET ON A 12° OR LARGER SKEW INCREASE S TO $\frac{S}{\cos \text{SKEW } \angle}$, REDESIGN FOR SKEWS AT A.
6. FOR VALUES OF "H" SEE PLANS.
7. "H" IS THE DIFFERENCE IN ELEVATION BETWEEN THE OUT FLOW PIPE AND THE NORMAL GUTTER GRADE LINE AT THE CURB FACE.
8. PIPE(S) CAN BE PLACED IN ANY WALL.
9. FOR DROP INLET, CONFIGURATIONS WITH 2 PIPES–INFLOW PIPE INVERT ELEVATION SHALL BE ≥ 0.1' ABOVE OUTFLOW PIPE INVERT ELEVATION.
10. EXTREME LOW COVER SITUATIONS TO BE REVIEWED BY THE HYDRAULICS ENGINEER.
11. SLOPE CATCH BASIN FLOORS 10:1 FROM ALL DIRECTIONS TOWARD OUTLET PIPE. IF BASIN IS USED AS A JUNCTION, SHAPE FLOW LINE(S) TO OUTLET PIPE, AND PROVIDE A 10:1 SLOPE TO FLOW LINE(S).
12. STATION/OFFSET DISTANCE LISTED IN PLANS IS MEASURED TO THE FACE OF CURB AT THE GUTTER FLOW LINE.
13. SEE SHEET R-2.9.1 FOR DETAILS IF CONNECTING TO HDPE PIPE.

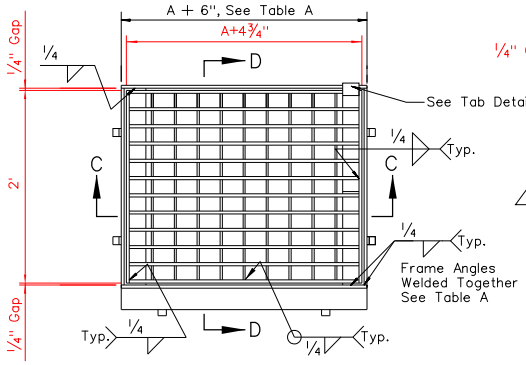

PLAN

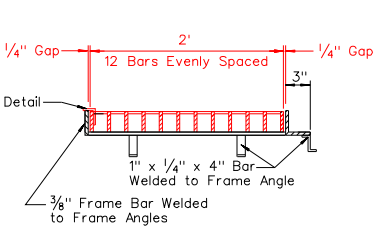

SECTION D–D

GRATE AND FRAME DETAIL

SHEET 2 OF 2

NEVADA DEPARTMENT OF TRANSPORTATION

DROP INLET
TYPE 3

Signed Original On File	R-4.2.3.1	(609)
CHIEF HYDRAULICS ENGINEER	ADOPTED 10/85	REVISION 5/09

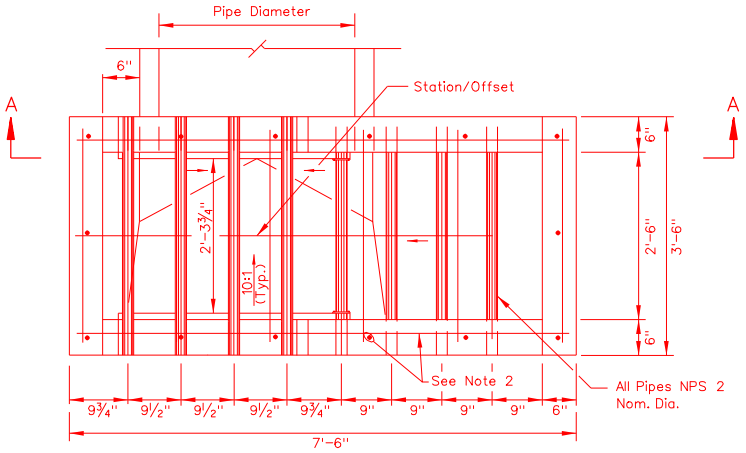

PLAN

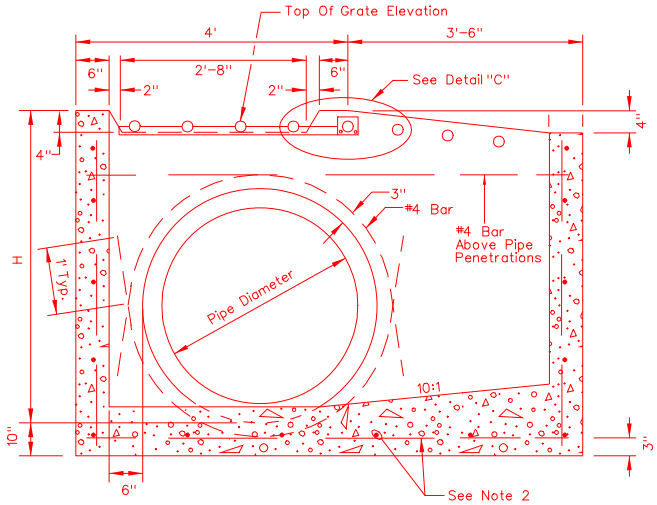

SECTION A-A

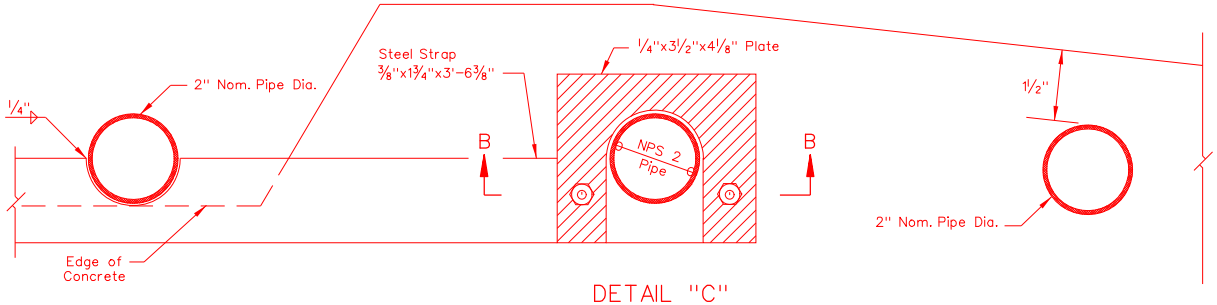

DETAIL "C"

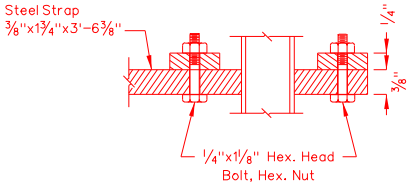

SECTION B-B

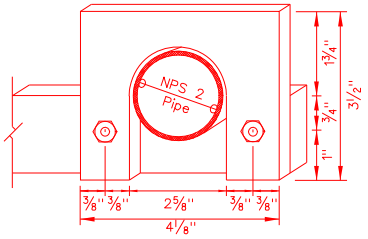

HINGE DETAIL

NOTES:

1. ALL CONCRETE SHALL BE CLASS A OR AA.
2. REINFORCING BARS SHALL BE NO. 4 BARS AT 18" CENTERS EMBEDDED 2" CLEAR OF CONCRETE SURFACE AND WIRED TIGHTLY AT ALL INTERSECTIONS, UNLESS OTHERWISE SHOWN.
3. ALL EXPOSED CONCRETE EDGES SHALL BE CHAMFERED 1".
4. DIMENSIONS MAY BE VARIED TO FIT LOCAL CONDITIONS AS DIRECTED BY THE ENGINEER.
5. NO DEDUCTIONS IN CONCRETE SHALL BE MADE FOR 2" CROSSBARS.
6. STEEL STRAP AND PIPE FOR CROSSBARS ARE INCLUDED IN THE STRUCTURAL STEEL GRATE QUANTITIES.
7. SLOPE CATCH BASIN FLOORS 10:1 FROM ALL DIRECTIONS TOWARD OUTLET PIPE. IF BASIN IS USED AS A JUNCTION. SHAPE FLOW LINE(S) TO OUTLET PIPE, AND PROVIDE A 10:1 SLOPE TO FLOW LINE(S).
8. PIPE PENETRATION MAY BE PLACED IN ANY WALL.
9. NPS = NOMINAL PIPE SIZE DESIGNATOR. SEE ASTM A53.
10. SEE SHEET R-2.9.1 FOR DETAILS IF CONNECTING TO HDPE PIPE.

TABLE OF QUANTITIES

Pipe Size	H Min.	Concrete (Cu. Yd.)	Reinf. Steel (lb)	Str. Stl. Grate (lb)
18"	3' 1"	1.89	81	117
24"	3' 7"	2.03	98	117
30"	4' 2"	2.20	102	117
36"	4' 8"	2.34	106	117
42"	5' 3"	2.50	123	117
48"	5' 9"	2.63	125	117

NEVADA DEPARTMENT OF TRANSPORTATION

DROP INLET TYPE 7

Signed Original On File | R-4.2.4 (609)

CHIEF HYDRAULICS ENGINEER | ADOPTED 8/69 | REVISION 5/09

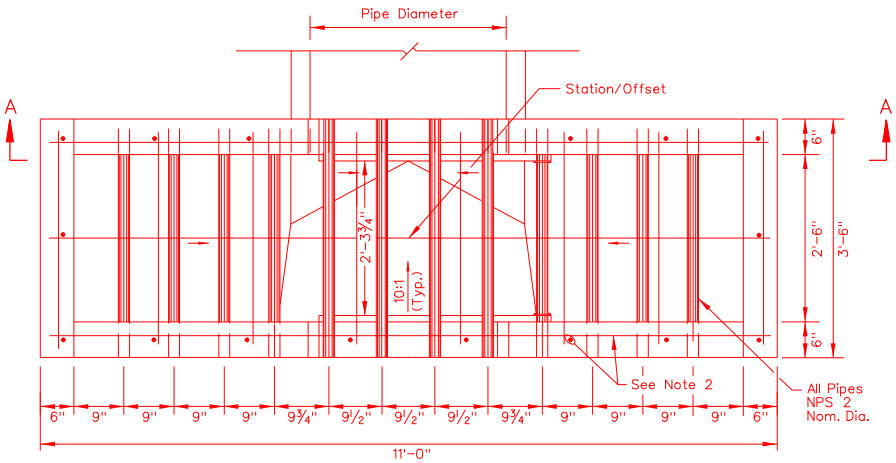

PLAN

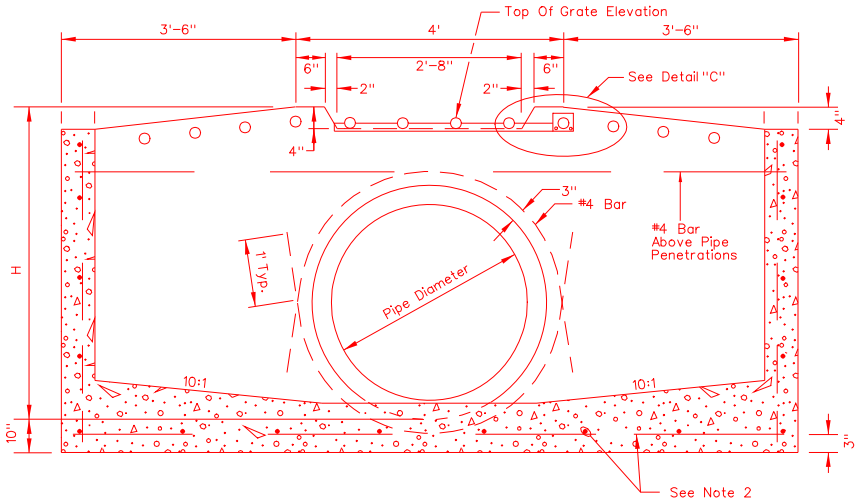

SECTION A-A

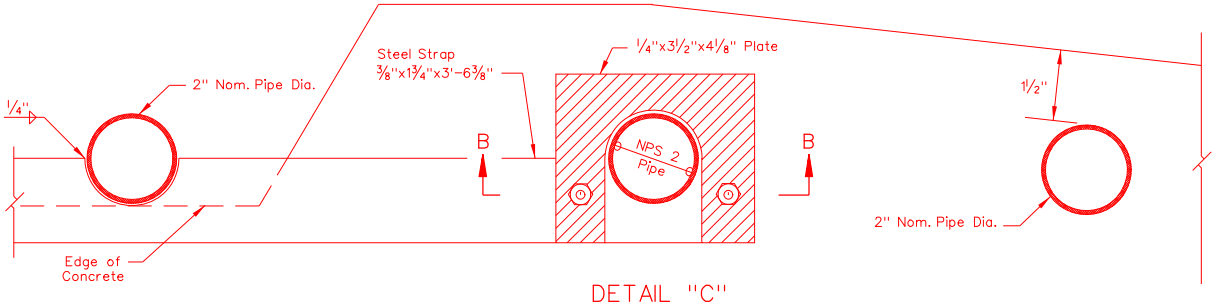

DETAIL "C"

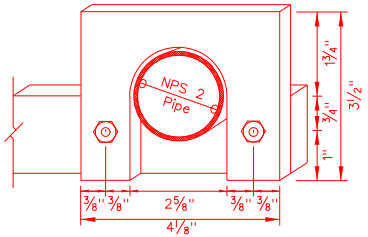

HINGE DETAIL

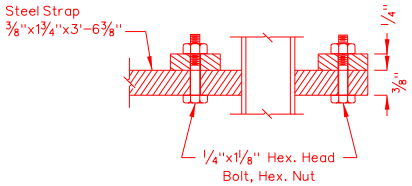

SECTION B-B

NOTES:

1. ALL CONCRETE SHALL BE CLASS A OR AA.
2. REINFORCING BARS SHALL BE NO. 4 BARS AT 18" CENTERS EMBEDDED 2" CLEAR OF CONCRETE SURFACE AND WIRED TIGHTLY AT ALL INTERSECTIONS, UNLESS OTHERWISE SHOWN.
3. ALL EXPOSED CONCRETE EDGES SHALL BE CHAMFERED 1".
4. DIMENSIONS MAY BE VARIED TO FIT LOCAL CONDITIONS AS DIRECTED BY THE ENGINEER.
5. NO DEDUCTIONS IN CONCRETE SHALL BE MADE FOR 2" CROSSBARS.
6. STEEL STRAP AND PIPE FOR CROSSBARS ARE INCLUDED IN THE STRUCTURAL STEEL GRATE QUANTITIES.
7. SLOPE CATCH BASIN FLOORS 10:1 FROM ALL DIRECTIONS TOWARD OUTLET PIPE. IF BASIN IS USED AS A JUNCTION, SHAPE FLOW LINE(S) TO OUTLET PIPE, AND PROVIDE A 10:1 SLOPE TO FLOW LINE(S).
8. PIPE PENETRATION MAY BE PLACED IN ANY WALL.
9. NPS = NOMINAL PIPE SIZE DESIGNATOR. SEE ASTM A53.
10. SEE SHEET R-2.9.1 FOR DETAILS IF CONNECTING TO HDPE PIPE.

TABLE OF QUANTITIES

Pipe Size	H Min.	Concrete (Cu. Yd.)	Reinf. Steel (lb)	Str. Stl. Grate (lb)
18"	3' 1"	2.89	111	168
24"	3' 7"	3.12	135	168
30"	4' 2"	3.38	140	168
36"	4' 8"	3.59	145	168
42"	5' 3"	3.83	168	168
48"	5' 9"	4.03	172	168

NEVADA DEPARTMENT OF TRANSPORTATION

DROP INLET
TYPE 8

Signed Original On File | R-4.2.4.1 (609)
CHIEF HYDRAULICS ENGINEER | ADOPTED 8/69 | REVISION 5/09

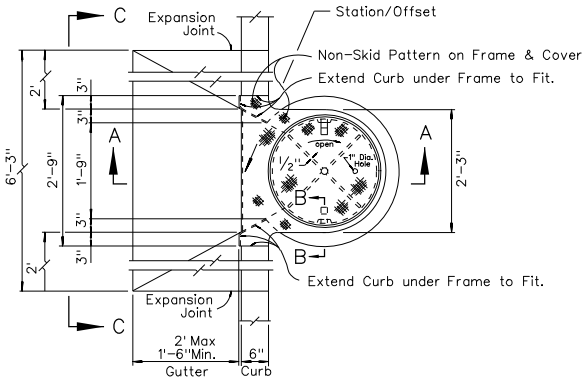

PLAN VIEW

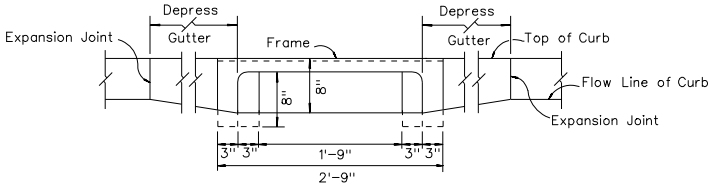

VIEW C-C

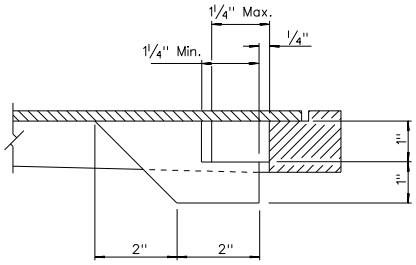

SECTION B-B
WEDGE LOCK HOLD DOWN

NOTES:

1. CONCRETE SHALL BE CLASS A OR AA.
2. FORMING OF THE BASE WILL NOT BE REQUIRED.
3. STATION/OFFSET DISTANCE LISTED IN PLANS IS MEASURED TO CURB FLOW LINE.
4. T = WALL THICKNESS.

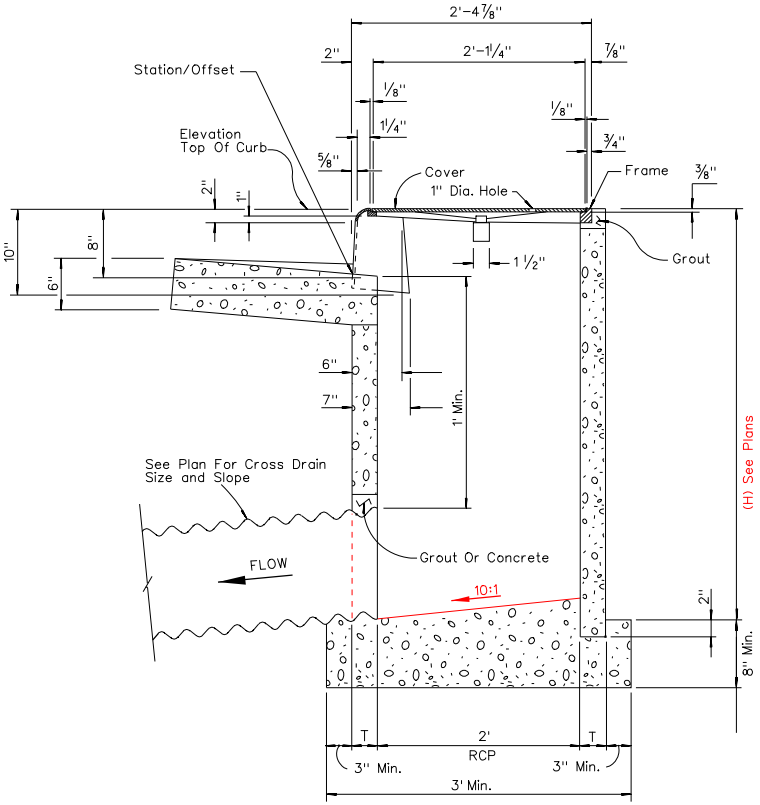

SECTION A-A

TYPE 10 CASTINGS	
FRAME	COVER
90 Lbs.	70 Lbs.

For Information Only

NEVADA DEPARTMENT OF TRANSPORTATION

DROP INLET
TYPE 10

Signed Original On File	R-4.2.5	(609)
CHIEF HYDRAULICS ENGINEER	ADOPTED 11/71	REVISION 5/09

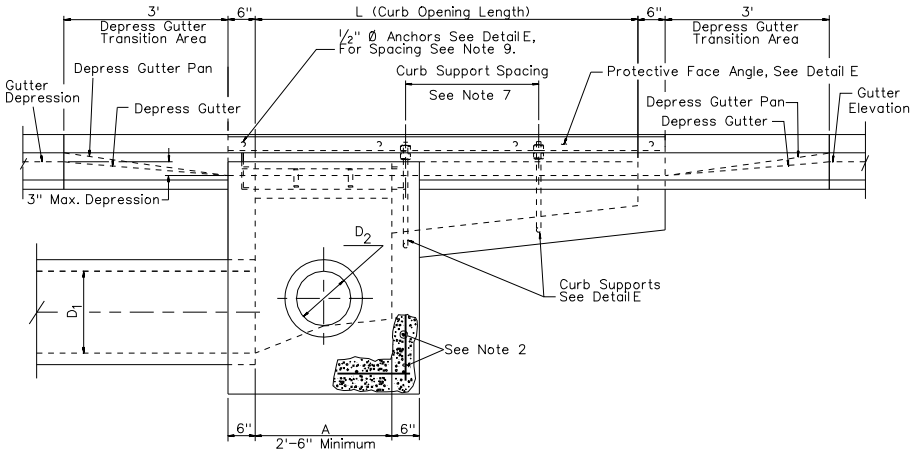

ELEVATION

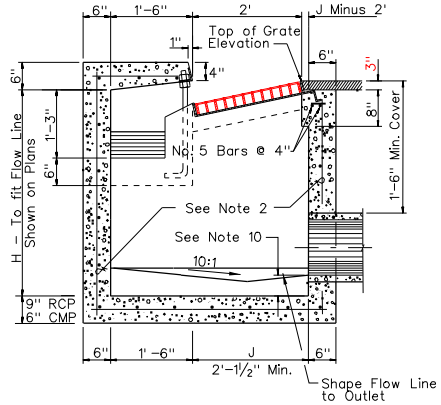

SECTION A-A

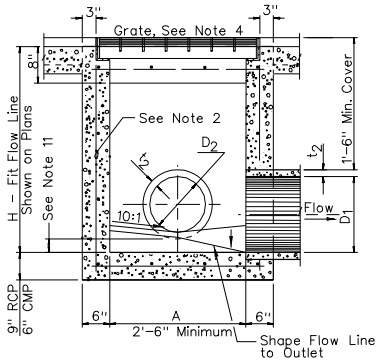

SECTION B-B

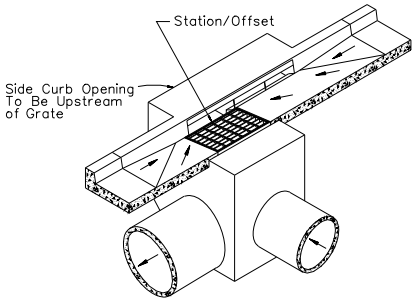

✳ QUANTITIES

OUTLET PIPE	CURB OPENING	STRUCTURAL STEEL (LBS.)	REINFORCING STEEL (LBS.)	CONCRETE (CU.YDS.)
18" RCP/ HDPE	7'	357	126	1.64
	10'	384	155	2.01
	12'	399	176	2.26
24" RCP/ HDPE	12'	399	179	2.34
	15'	426	209	2.72

✳ ASSUMED MINIMUM H 15" INLET PIPE

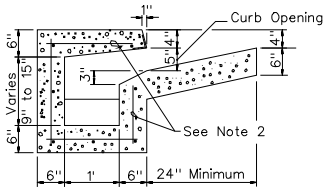

SECTION C-C

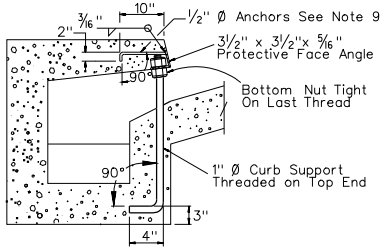

DETAIL E
For Rebar Installation See Section C-C

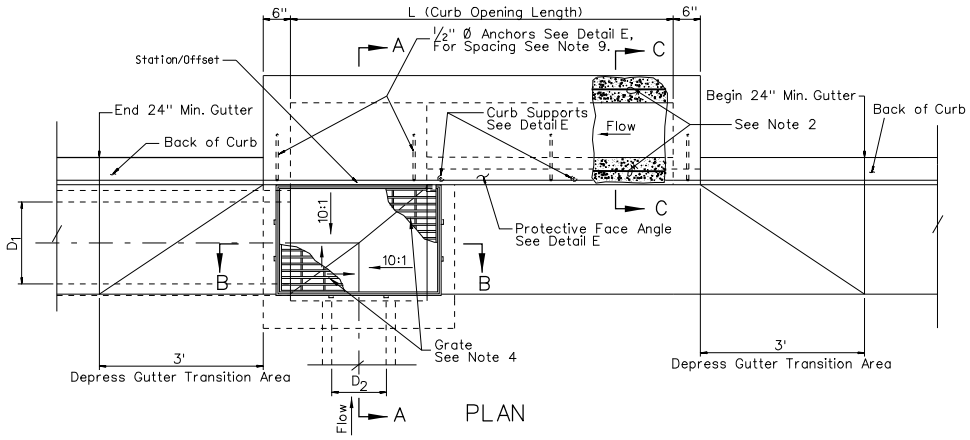

PLAN

NOTES:

1. ALL CONCRETE SHALL BE CLASS AA OR A.
2. REINFORCING STEEL SHALL BE NO. 4 BARS, EXCEPT AS NOTED, WITH MAXIMUM SPACE AT 12" CENTERS, WIRED TIGHTLY AT ALL INTERSECTIONS, AND EMBEDDED AT LEAST 1½" CLEAR OF CONCRETE SURFACE, EXCEPT AS NOTED.
3. EXPOSED EDGES OF CONCRETE SHALL BE CHAMFERED 1".
4. FOR GRATE AND FRAME DETAIL, SEE SHEET R-4.2.3.
5. FOR VALUES OF "H" AND "L" SEE PLANS.
6. "H" IS THE DIFFERENCE IN ELEVATION BETWEEN THE OUT PIPE FLOW LINE AND THE NORMAL GUTTER GRADE LINE AT THE CURB FACE.
7. CURB OPENINGS LONGER THAN 7' SHALL HAVE ONE CURB SUPPORT FOR EACH 7' INCREMENT OR FRACTION THEREOF, EVENLY SPACED.
8. PIPE(S) CAN BE PLACED IN ANY WALL.
9. ANGLE ANCHORS SHALL BE EMBEDDED MIDPOINT IN EACH ENDWALL, EVENLY SPACED, AND MAXIMUM SPACING OF 5'.
10. FOR DROP INLET CONFIGURATIONS WITH 2 PIPES-INFLOW PIPE INVERT ELEVATION SHALL BE ≥ 0.1' ABOVE OUTFLOW PIPE INVERT ELEVATIONS.
11. SLOPE CATCH BASIN FLOORS 10:1 FROM ALL DIRECTIONS TOWARD OUTLET PIPE. IF BASIN IS USED AS A JUNCTION, SHAPE FLOW LINE(S) TO OUTLET PIPE, AND PROVIDE A 10:1 SLOPE TO FLOW LINE(S).
12. STATION/OFFSET DISTANCE LISTED IN PLANS IS MEASURED TO THE FACE OF CURB AT THE GUTTER FLOW LINE.
13. SEE SHEET R-2.9.1 FOR DETAILS IF CONNECTING TO HDPE PIPE.

A	
D_2	for CMP
D_2 + 6"	for RCP/HDPE 42" or Less
D_2 + 2 t_2	for RCP/HDPE 48" or More

J	
D_1	for CMP
D_1 + 6"	for RCP/HDPE 24" or Less
D_1 + 2 t_1	for RCP/HDPE 30" or More

NEVADA DEPARTMENT OF TRANSPORTATION

DROP INLET TYPE 11

Signed Original On File	R-4.2.6	(609)
CHIEF HYDRAULICS ENGINEER	ADOPTED 5/85	REVISION 5/09

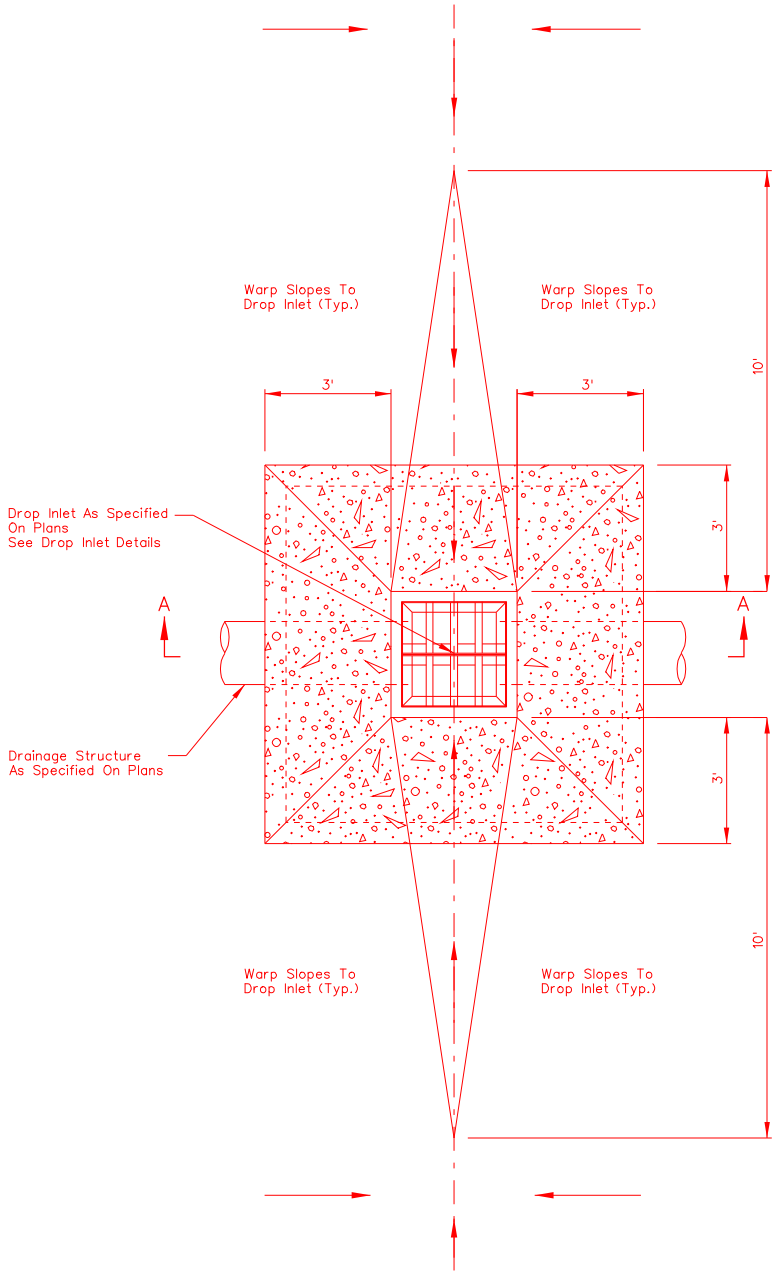

DROP INLET
CONCRETE APRON

GENERAL NOTES:

1. CONCRETE SHALL BE CLASS A OR AA.

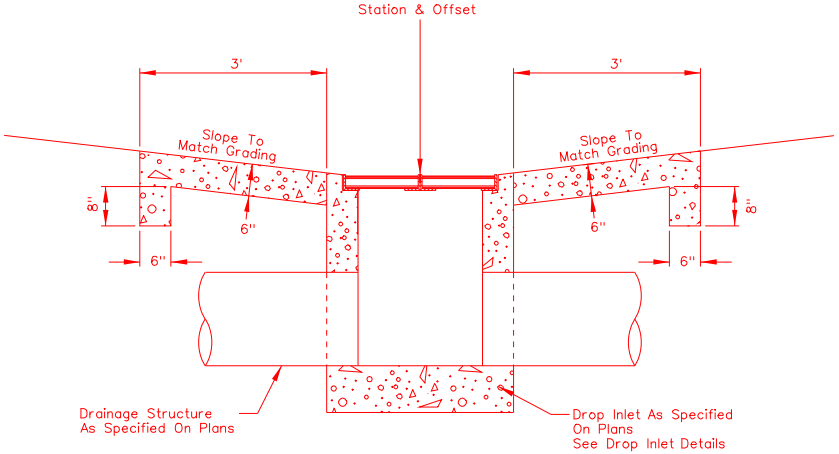

SECTION A–A

NEVADA DEPARTMENT OF TRANSPORTATION

DROP INLET
CONCRETE APRON

Signed Original On File	R-4.2.7	(609)
CHIEF HYDRAULICS ENGINEER	ADOPTED 5/09	REVISION

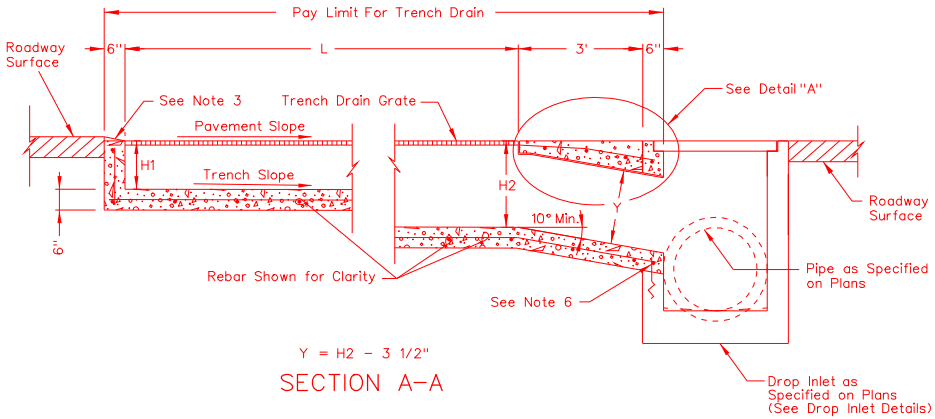

SECTION A-A

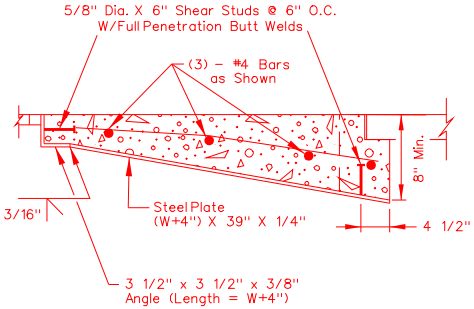

DETAIL A

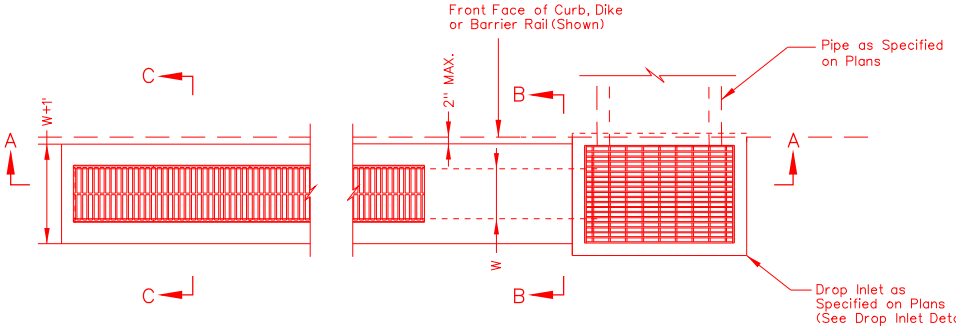

PLAN

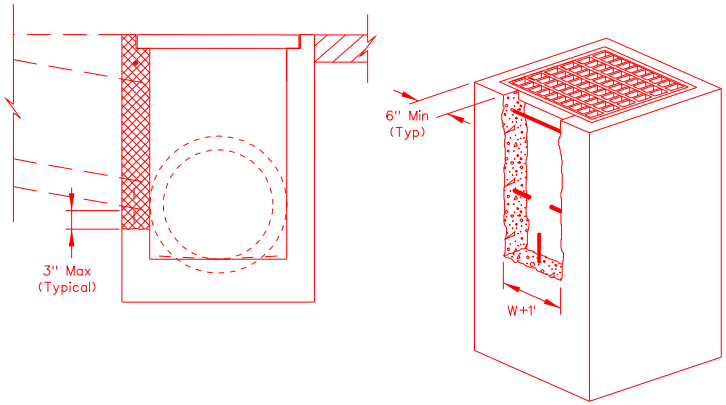

EXISTING DROP INLET (REMOVAL)

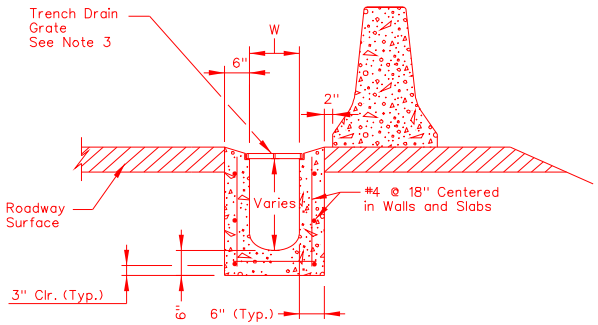

SECTION C-C

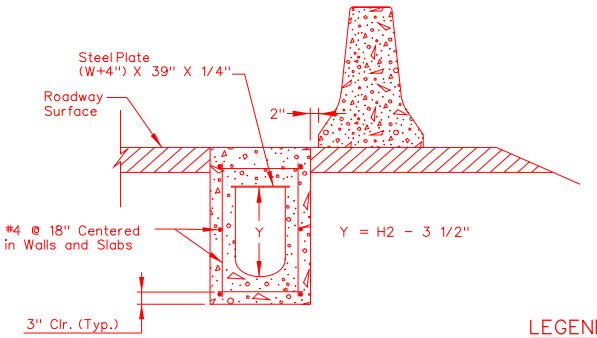

SECTION B-B

NOTES:

1. REVISIONS REQUIRE APPROVAL BY THE ENGINEER IN WRITING PRIOR TO CONSTRUCTION.
2. CONSTRUCTION OF THE TRENCH DRAIN SHALL FOLLOW THE MANUFACTURERS RECOMMENDATIONS.
3. TRENCH DRAIN GRATE TO BE 1/4" TO 3/8" BELOW ADJACENT PAVEMENT SURFACE.
4. L, W, H1, AND H2 AS SPECIFIED ON PLANS.
5. ALL CONCRETE SHALL BE CLASS A OR AA.
6. IF RETROFITTING TO AN EXISTING DROP INLET PRESERVE EXISTING REBAR DURING REMOVAL OF SIDE WALL AS NEEDED TO TIE TO TRENCH DRAIN REINFORCEMENT. INSTALL ADDITIONAL REBAR TO FACILITATE CONNECTION TO DROP INLET AND REPLACE DAMAGED EXISTING REBAR. DOWELING PERPENDICULAR TO SIDE WALL IN LIEU OF CONNECTING TO EXISTING REBAR IS NOT PERMITTED.

LEGEND:

- Limits of Removal

NEVADA DEPARTMENT OF TRANSPORTATION

TRENCH DRAIN AND DROP INLET CONNECTION

Signed Original On File	R-4.2.8	(609)
CHIEF HYDRAULICS ENGINEER	ADOPTED 5/09	REVISION

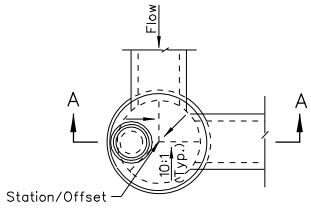

PLAN

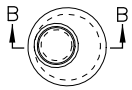

PLAN

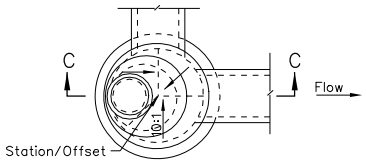

PLAN

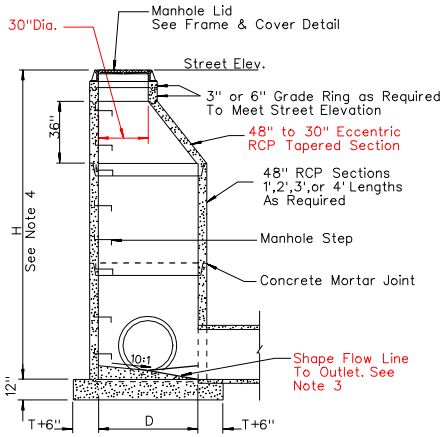

D = 48"– Max Pipe Penetration O.D. = 33"
See Note 11

SECTION A–A

TYPE 1 MANHOLE
ECCENTRIC

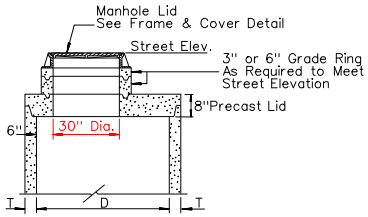

SECTION B–B

TYPE 1 & 2 MANHOLE
MODIFIED

For Use in Minimum Cover Situation Where
Tapered Section Will Not Fit.

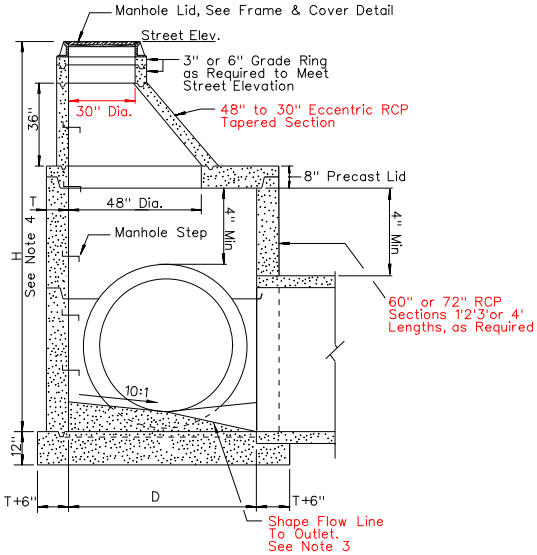

D= 60" – Max Pipe Penetration O.D. = 44"
or
72" – Max Pipe Penetration O.D. = 58"
See Note 11

SECTION C–C

TYPE 2 MANHOLE
ECCENTRIC

NOTES:

1. FOR CAST IN PLACE CONCRETE BASE ALL REINFORCING STEEL TO BE NO. 4 BARS AT 18" CENTERS TIGHTLY WOUND AT ALL INTERSECTIONS AND EMBEDDED IN CONCRETE AT LEAST 2" AND BAR ENDS MUST CLEAR CONCRETE SURFACES BY 1½". PRECAST CONCRETE BASE MAY BE USED IN LIEU OF CAST–IN PLACE BASE.
2. ALL CONCRETE SHALL BE CLASS A OR AA.
3. INFLOW PIPE INVERT ELEVATIONS SHALL BE ≥ 0.1' ABOVE OUTFLOW PIPE ELEVATION.
4. FOR VALUES OF "H" SEE PLANS. "H" IS THE DIFFERENCE IN ELEVATION BETWEEN THE OUTFLOW PIPE INVERT ELEVATION AND THE TOP OF MANHOLE ELEVATION AT STREET GRADE.
5. DO NOT PLACE PIPES IN TAPERED SECTION.
6. MANHOLE COVER SHALL BEAR ENTITY IDENTIFICATION AND SYSTEM FUNCTION (IF APPLICABLE).
7. PRECAST CONCRETE PIPE SECTIONS, TAPERED SECTIONS, LIDS, GRADE RINGS, BASES, AND STEPS SHALL CONFORM TO AASHTO M 199 (ASTM C–478).
8. SHAPE FLOW LINE IN MANHOLE TO OUTLET PIPE, AND PROVIDE A 10:1 MINIMUM SLOPE FROM ALL DIRECTIONS TOWARD FLOW LINE.
9. T = MANHOLE PIPE WALL THICKNESS.
10. ROTATE PRECAST LID OR ECCENTRIC RCP TAPERED SECTION TO LOCATE LADDER AWAY FROM PIPE OPENINGS AND TO KEEP MANHOLE COVER OUT OF THE WHEEL PATH OR OTHER UNDESIRABLE LOCATIONS AS DIRECTED BY THE ENGINEER.
11. THE CLEAR DISTANCE BETWEEN ADJACENT PIPE PENETRATIONS SHALL NOT BE LESS THEN 6". A LARGER MANHOLE MAY BE NECESSARY TO MAINTAIN ADEQUATE SPACING.

NEVADA DEPARTMENT OF TRANSPORTATION

TYPE 1 & 2
AND TYPE 1 & 2 MODIFIED
MANHOLES

Signed Original On File	R-4.3.1	(609)
CHIEF HYDRAULICS ENGINEER	ADOPTED 10/85	REVISION 5/09

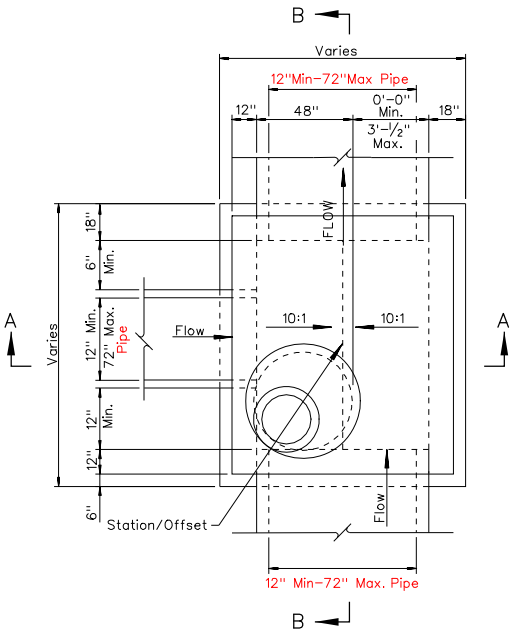

PLAN

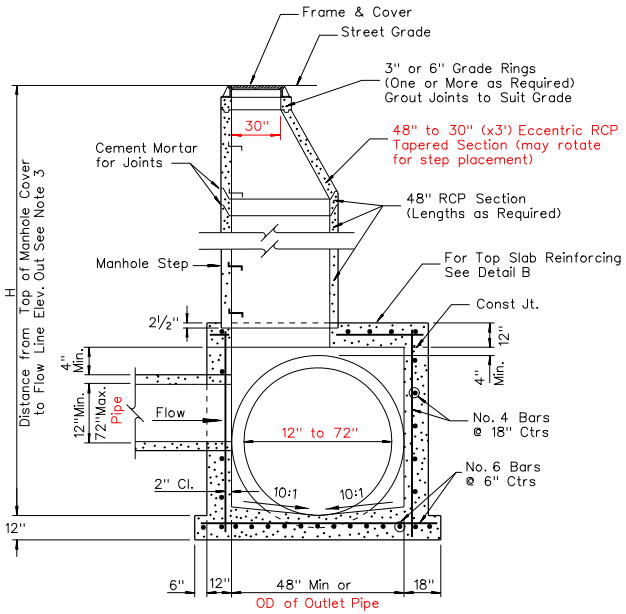

SECTION A-A
For Variable Height Situations

NOTES:

1. ALL CONCRETE SHALL BE CLASS A OR CLASS AA.
2. INFLOW PIPE INVERT ELEVATIONS SHALL BE GREATER THAN OR EQUAL TO 0.1' ABOVE THE OUTFLOW PIPE INVERT ELEVATION.
3. FOR VALUES OF "H", SEE PLANS. "H" IS THE DIFFERENCE IN ELEVATION BETWEEN THE OUTFLOW PIPE INVERT ELEVATION AND THE TOP OF MANHOLE ELEVATION AT STREET GRADE.
4. PRECAST CONCRETE PIPE SECTIONS, TAPERED SECTIONS, LIDS, GRADE RINGS, BASES, AND STEPS SHALL CONFORM TO AASHTO M 199 (ASTM C-478).
5. MANHOLE COVER SHALL BEAR ENTITY IDENTIFICATION AND SYSTEM FUNCTION (IF APPLICABLE).
6. SHAPE FLOWLINE IN MANHOLE TO OUTLET PIPE, AND PROVIDE A 10:1 SLOPE FROM ALL DIRECTIONS TOWARD FLOW LINE.
7. REFER TO SHEET R-2.9.1 FOR DETAILS IF CONNECTING TO HDPE PIPE.

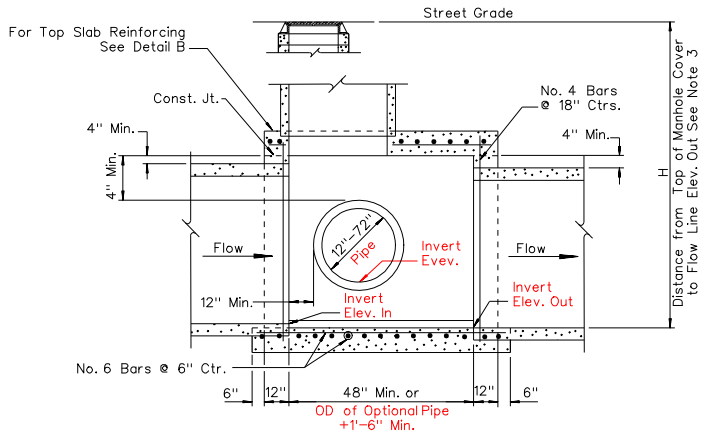

SECTION B-B

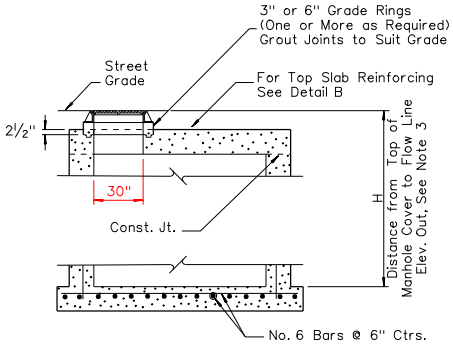

SECTION A-A
For Minimum Height Situation

Note: Hydraulic Engineer Will Look at Other Options for Extreme Minimum Cover Situations.

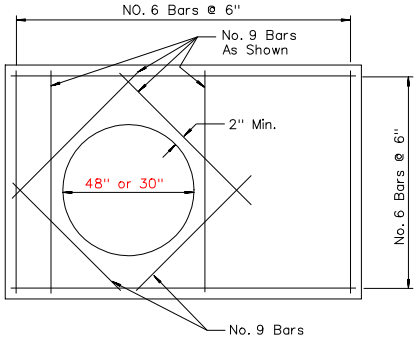

DETAIL B
Top Slab Reinforcing

NEVADA DEPARTMENT OF TRANSPORTATION

TYPE 4 MANHOLE

Signed Original On File	R-4.3.2	(609)
CHIEF HYDRAULICS ENGINEER	ADOPTED 10/85	REVISION 5/09

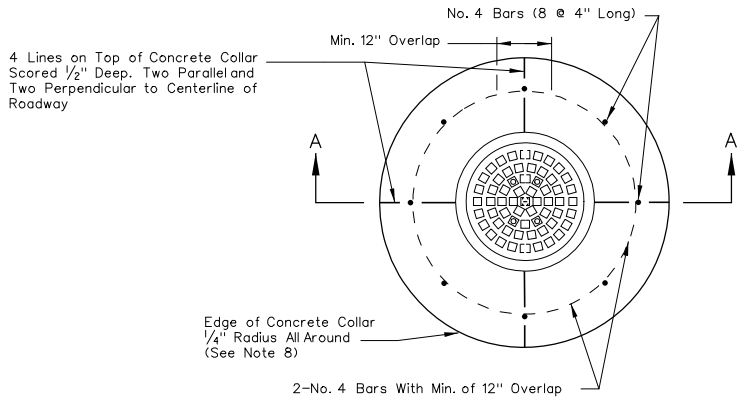

CONCRETE COLLAR PLAN

See Note 10

NOTES:

1. THE WEIGHT OF FRAME SHALL BE 145 lbs. MINIMUM AND THE WEIGHT OF COVER SHALL BE 125 lbs. MINIMUM. TRAFFIC-STRENGTH MANHOLE FRAME & COVER SHALL COMPLY WITH AASHTO M18 WHEEL LOADS. EQUIVALENT MANHOLE FRAMES & COVERS OTHER THAN SHOWN MAY BE USED UPON APPROVAL BY THE ENGINEER.
2. THE FRAME SEAT AND COVER EDGE SHALL BE MACHINED TO A TRUE BEARING SURFACE ALL AROUND. THE FRAME & COVER SHALL BE COMPATIBLE TO THE MANUFACTURERS SPECIFICATIONS.
3. THE SURFACE SHOWN IS FOR ILLUSTRATION ONLY. ANY SURFACE DESIGN, OTHER THAN SMOOTH, MAY BE USED UPON APPROVAL.
4. FRAMES & COVERS SHALL CONFORM TO ASTM A48, CLASS 40 FOR GRAY IRON CASTINGS.
5. A CAST-IN-PLACE CONCRETE COLLAR SHALL BE PLACED AROUND A MANHOLE FRAME UNLESS OTHERWISE DIRECTED.
6. MANHOLE COVER SHALL BEAR NAME OF ENTITY & SYSTEM FUNCTION (IF APPLICABLE).
7. CONCRETE SHALL BE CLASS A OR AA.
8. CONCRETE COLLARS MAY BE POURED ROUND, OR ANY OTHER APPROPRIATE SHAPE WHEN APPROVED BY THE ENGINEER.
9. COMMERCIAL PREFABRICATED GRADE RINGS FOR MANHOLES SHALL CONFORM TO AASHTO M 199 (ASTM C-478).
10. MANHOLE COVER & FRAME SHOWN. OTHER SHAPES MAY APPLY TO UTILITY AND VALVE COVERS AND FRAMES

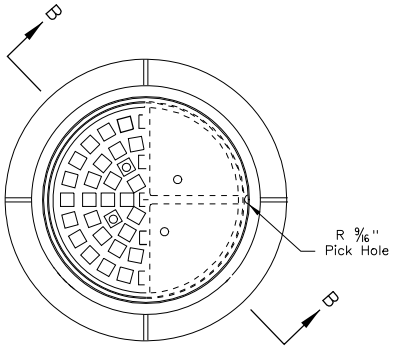

PLAN

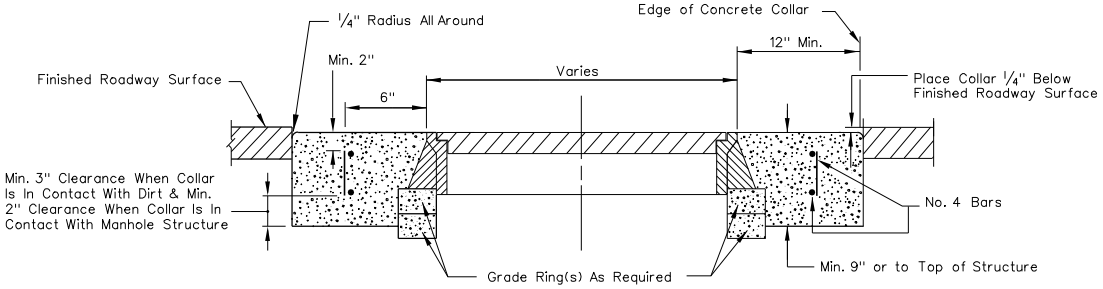

SECTION A-A

See Note 10

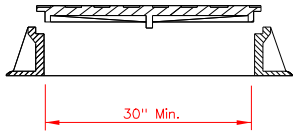

SECTION B-B

TRAFFIC-STRENGTH
MANHOLE FRAME & COVER

NEVADA DEPARTMENT OF TRANSPORTATION

MANHOLE COVER, FRAME, & CONCRETE COLLAR

Signed Original On File	R-4.3.3	(609)
CHIEF HYDRAULICS ENGINEER	ADOPTED 8/69	REVISION 5/09

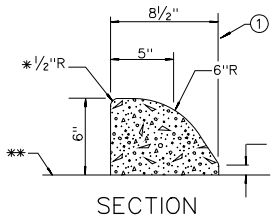

SECTION
TYPE A
(0.0108 cu. yds. per ft.)

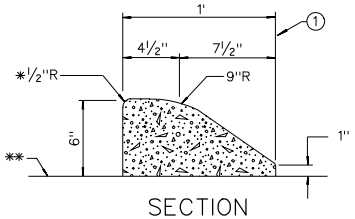

SECTION
TYPE B
(0.0185 cu. yds. per ft.)

Note: Epoxy Cement May Be Omitted When Installation Is Temporary.
* Omit Rounding When Curbs Are Back To Back (Epoxy Curb To Plantmix Surface)
** P.C.C. or Dense Graded

GLUE DOWN CURBS

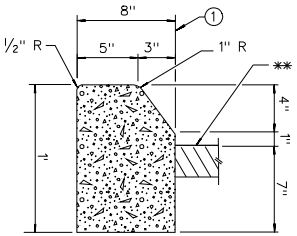

SECTION
TYPE 2
(0.02315 cu. yd. per ft.)

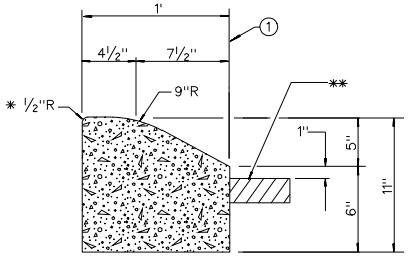

SECTION
TYPE 3
(0.02894 cu. yd. per ft.)

* Omit Rounding When Curbs Are Back To Back.
** P.C.C. or Dense Graded

CURB

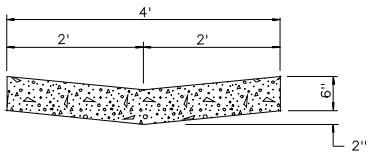

SECTION
TYPE 2
(0.07407 cu. yd. per ft.)

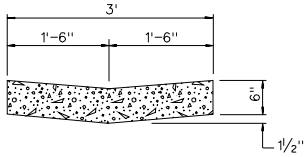

SECTION
TYPE 1
(0.0556 cu. yd. per ft.)

VALLEY GUTTER

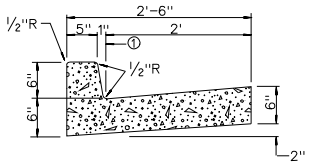

SECTION
TYPE 1
(0.05478 cu. yd. per ft.)

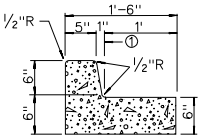

SECTION
TYPE 4
(0.03627 cu. yd. per ft.)

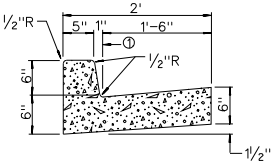

SECTION
TYPE 5
(0.04552 cu. yd. per ft.)

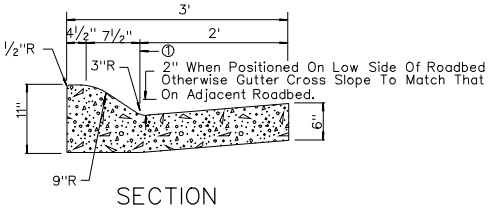

SECTION
TYPE 6
(0.06599 cu. yd per ft.)

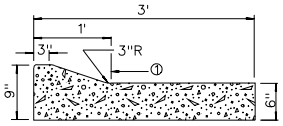

SECTION
TYPE 7
(0.0613 cu. yd. per ft.)

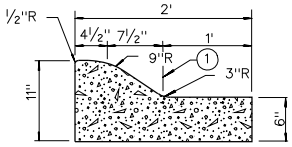

SECTION
TYPE 8
(0.04747 cu. yd. per ft.)

NOTES:

1. THIS LINE SHOULD BE USED TO DIMENSION OFFSETS.
2. WHEN DISTANCE BETWEEN BACK OF CURB ON ISLANDS IS 4 FEET OR LESS, USE 4" CLASS A OR AA CONCRETE (ISLAND PAVING) AND 2" OF GRAVEL BASE.
3. CONCRETE SHALL BE CLASS A OR AA.
4. ALL CONCRETE UNIT VOLUME FOR INFORMATION ONLY.

CURB AND GUTTER

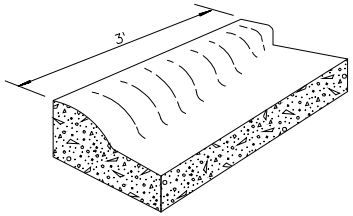

TYPICAL TRANSITION FROM
ROLLED CURB TO VERTICAL FACE

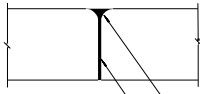

ELEVATION
TYPICAL EXPANSION JOINT DETAIL

NEVADA DEPARTMENT OF TRANSPORTATION

CURB & GUTTERS

Signed Original On File	R-5.1.1	(502,613)
CHIEF HYDRAULICS ENGINEER	ADOPTED 8/69	REVISION 12/02

R-56

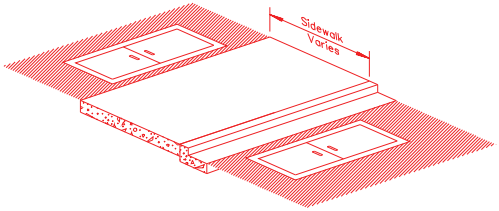

METHOD 1

Always Use if Obstruction can be Located Completely Out of Sidewalk

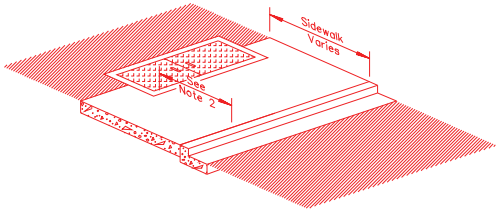

METHOD 2

Use Only if Method 1 Can Not be Achieved

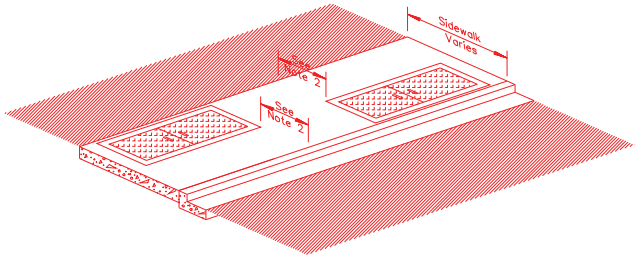

METHOD 3

Use Only if Method 2 Can Not be Achieved
(See Note 4)

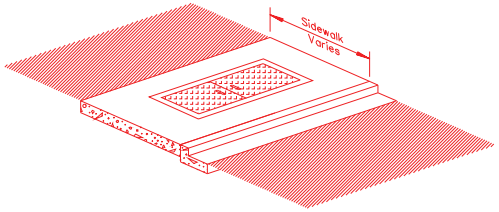

METHOD 4

Use Only if Method 3 Can Not be Achieved

LOCATING OBSTRUCTIONS
(FLAT)

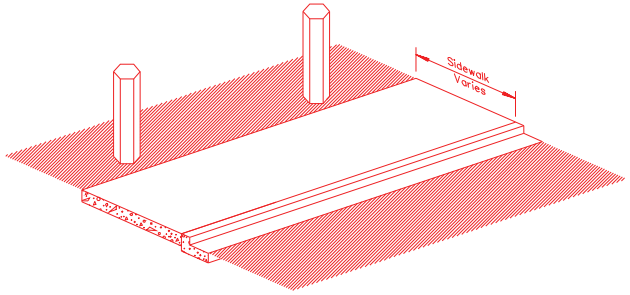

METHOD 1

Always Use if Obstruction can be Located Completely Out of Sidewalk

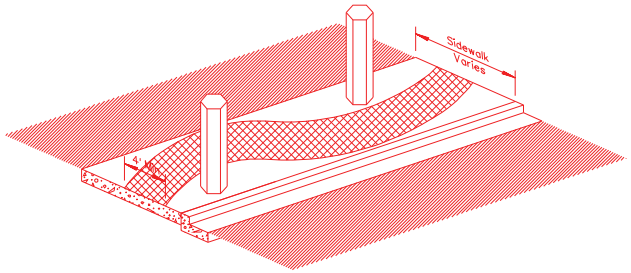

METHOD 2

Use Only if Method 1 Can Not be Achieved
(See Note 3)

LOCATING OBSTRUCTIONS
(UPRIGHT)

LEGEND:

– Flat Obstruction
Slip Resistant Cover Optional

– Flat Obstruction
Slip Resistant Cover Required

– Upright Obstructions
(i.e. Utility Poles, Sign Supports,
Fire Hydrant, Cabinets,
Phone Booth, Light Poles, Etc.)

– Pedestrian Access Route

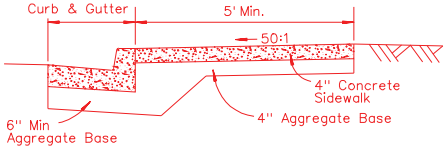

TYPE 1

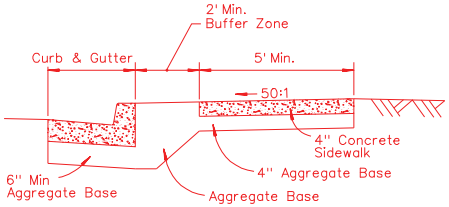

TYPE 2

NOTES:

1. CONCRETE SHALL BE CLASS A OR AA.
2. IF POSSIBLE LOCATE FLAT OBCTRUCTIONS TO MAINTAIN A 4' MINIMUM PEDESTRIAN ACCESS ROUTE. IF A 4' PEDESTRIAN ACCESS ROUTE CAN NOT BE MAINTAINED USE SKID RESISTANT COVERS.
3. LOCATE UPRIGHT OBSTRUCTIONS TO MAINTAIN A 4' MINIMUM PEDESTRIAN ACCESS ROUTE.
4. IF LOCATING FLAT OBSTRUCTIONS PER METHOD 3 AND THE SIDEWALK HAS A BUFFER ZONE THEN LOCATE THE OBSTRUCTIONS IN THE BUFFER ZONE.
5. UPRIGHT OBSTRUCTIONS ARE NOT ALLOWED IN NEW SIDEWALKS.
6. IF FLAT OBSTRUCTIONS ARE LOCATED WITHIN A CROSSWALK USE SLIP RESISTANT COVERS.

NEVADA DEPARTMENT OF TRANSPORTATION

SIDEWALKS

Signed Original On File	R-5.2	(613)
CHIEF ROAD DESIGN ENGR.	ADOPTED 5/09	REVISION

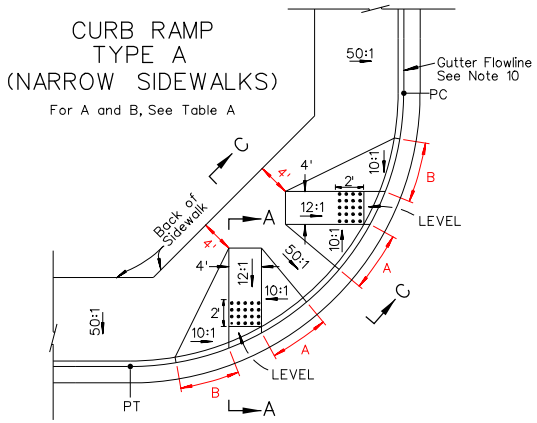

CURB RAMP
TYPE A
(NARROW SIDEWALKS)

For A and B, See Table A

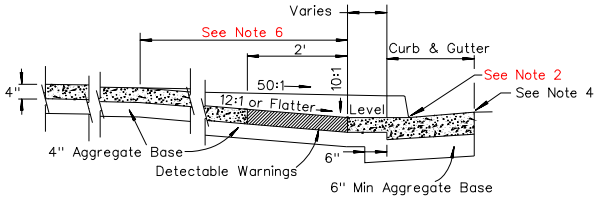

SECTION A–A

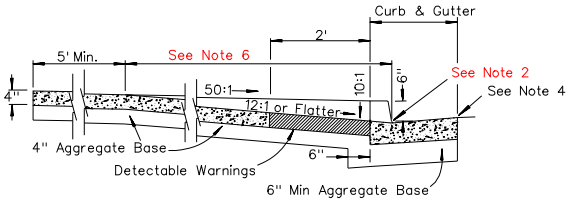

SECTION B–B

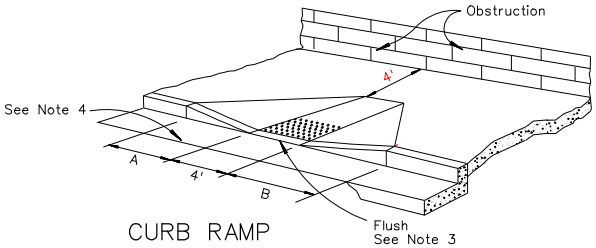

CURB RAMP
TYPE B
(MID BLOCK)

For A and B, See Table A

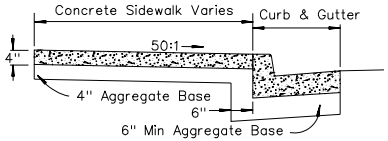

SECTION C–C

NOTES:

1. GRATINGS OR SIMILAR ACCESSES SHALL NOT BE LOCATED IN AREA AT THE BASE OF THE CURB RAMP OR IN THE RAMP AND LANDING AREA.
2. TRANSITIONS FROM RAMPS TO GUTTERS OR ROADWAY SURFACE SHALL BE FLUSH AND FREE OF ABRUPT CHANGES.
3. PLANTMIX BITUMINOUS OPEN-GRADED SURFACE SHALL BE FLUSH WITH THE EDGE OF THE GUTTER PAN IN THE AREA OF THE CURB RAMP, AND FEATHERED AT 12:1 IN LINE WITH THE CROSSWALK.
4. ROUGH BROOM TEXTURE ON CURB RAMPS AND WINGS. TEXTURE SHALL PROVIDE A VISUAL CONTRAST TO THE SIDEWALK.
5. CURB RAMP WINGS DO NOT HAVE TO BE WITHIN CROSS-WALK HOWEVER, THE RAMP ITSELF HAS TO BE INSIDE CROSS-WALK.
6. ALL RAMPS SHALL BE 12:1 OR FLATTER, 15' MAXIMUM LENGTH.
7. ALL SLOPE RATES ARE RELATIVE TO LEVEL.
8. CONCRETE SHALL BE CLASS A OR AA.
9. RAISE GUTTER FLOWLINE 2" MAX., WHEN REQUIRED TO PREVENT PONDING AT THE RAMP AND MAINTAIN POSITIVE DRAINAGE.
10. DETECTABLE WARNINGS SHALL BE INSTALLED PER MANUFACTURERS GUIDELINES AND CONFORM TO PROWAG (R304.1.3) "CONTRAST."
11. CURB RAMPS AND DETECTABLE WARNINGS SHALL BE ALIGNED IN THE SAME DIRECTION AS THE CROSS-WALK.

DESIGN NOTES:

D1. IF THERE ARE R/W RESTRICTIONS THEN THE SIDEWALK WIDTH CAN BE REDUCED TO NO LESS THAN 4 FEET WITH APPROVAL OF THE ASSISTANT CHIEF ROAD DESIGN ENGINEER. IF THE SIDEWALK WIDTH IS LESS THAN 5 FEET THEN 5-FOOT BY 5-FOOT PASSING ZONES ARE REQUIRED AT 200-FOOT INTERVALS.

TABLE A

GRADE % B TO A	A MIN.	B MIN.
-6 TO -5.01	4'	12' - 6"
-5 TO -4.01	4'	10'
-4 TO -3.01	4'	8' - 6"
-3 TO -2.01	4'	7' - 6"
-2 TO -1.01	4' - 6"	6' - 6"
-1 TO 1	5' - 6"	5' - 6"
1.01 TO 2	6' - 6"	4' - 6"
2.01 TO 3	7' - 6"	4'
3.01 TO 4	8' - 6"	4'
4.01 TO 5	10'	4'
5.01 TO 6	12' - 6"	4'

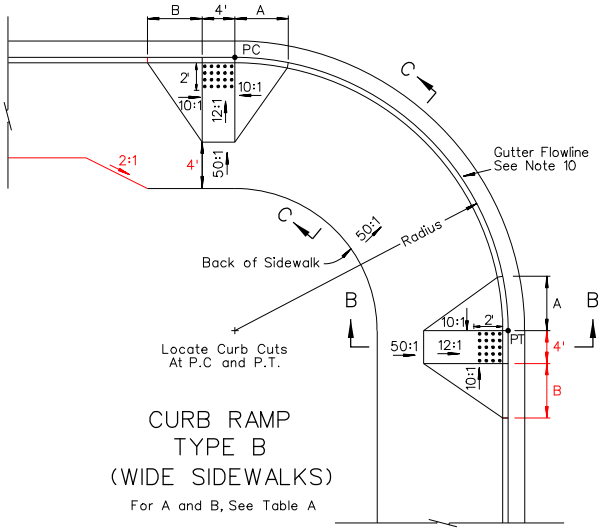

CURB RAMP
TYPE B
(WIDE SIDEWALKS)

For A and B, See Table A

LEGEND:

DETECTABLE WARNINGS

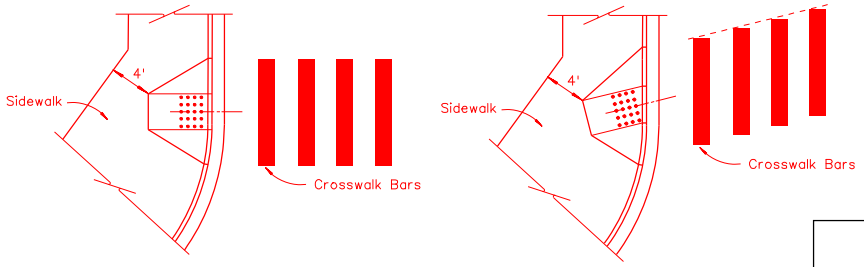

CURB RAMP/CROSSWALK
ALIGNMENT

See Note 11

NEVADA DEPARTMENT OF TRANSPORTATION

CURB RAMPS
(NEW CONSTRUCTION)

Signed Original On File	R-5.2.1	(613)
CHIEF ROAD DESIGN ENGR.	ADOPTED 7/96	REVISION 11/09

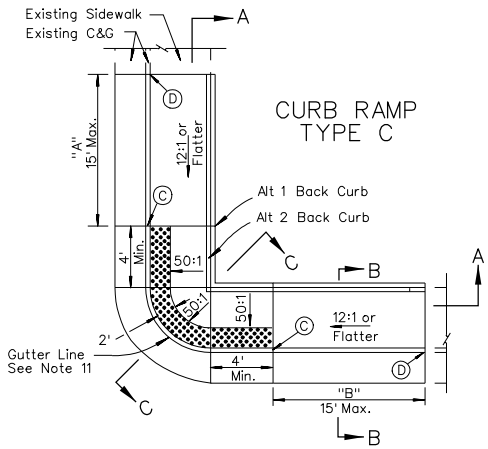

CURB RAMP TYPE C

TABLE 1-12

GRADE % "B" TO "A"	"A" MIN.	"B" MIN.
>-4.00	4'-6"	15'
-4 TO -3.01	4'-6"	12'
-3 TO -2.01	5'	9'-6"
-2 TO -1.01	5'-6"	8'
-1 TO 1	7'	7'
1.01 TO 2	8'	5'-6"
2.01 TO 3	9'-6"	5'
3.01 TO 4	12'	4'-6"
> 4.00	15'	4'-6"

ALT

Alt 1: Back Curb Outside Ramp - No R/W Restrictions
Alt 2: Back Curb Inside Ramp - If R/W Restrictions
Alt 3: No Back Curb

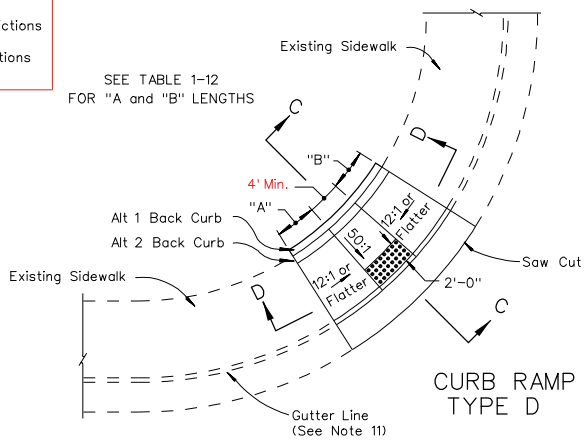

CURB RAMP TYPE D

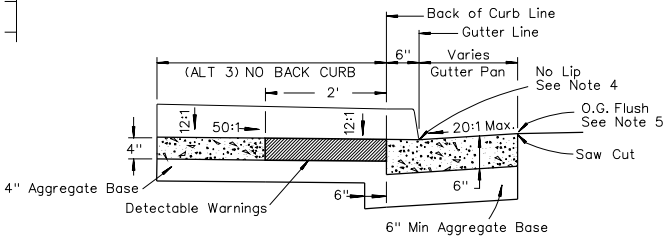

SECTION C-C WITHOUT BACK CURB

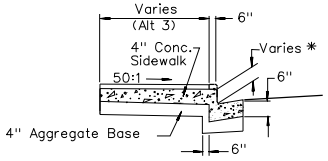

SECTION B-B

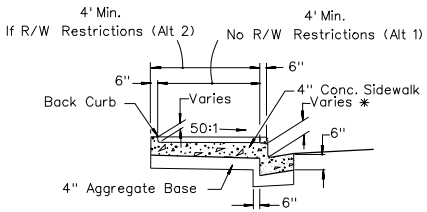

SECTION B-B WITH BACK CURB

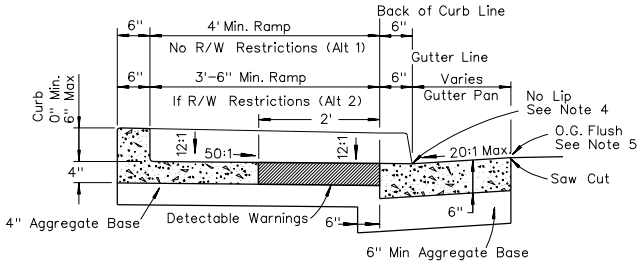

SECTION C-C WITH BACK CURB

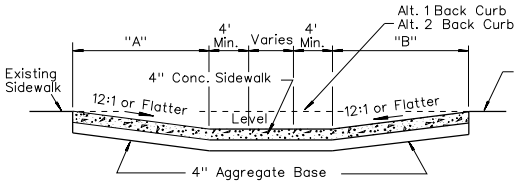

SECTION A-A

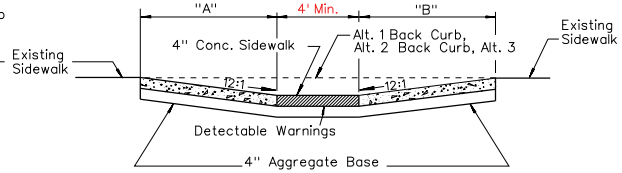

SECTION D-D

NOTES:

1. IF RIGHT-OF-WAY IS AVAILABLE, USE TYPE A CURB RAMP.
2. SEE STRUCTURE LIST AND PLAN SHEETS FOR "A" AND "B".
3. GRATINGS OR SIMILAR ACCESSES SHALL NOT BE LOCATED IN AREA AT THE BASE OF THE CURB RAMP OR LANDING AREA.
4. TRANSITIONS FROM RAMPS TO GUTTERS OR ROADWAY SURFACE SHALL BE FLUSH AND FREE OF ABRUPT CHANGES. GRINDING SHALL BE 6" MINIMUM PERPENDICULAR TO FLOW LINE FOR RETROFIT.
5. PLANTMIX BITUMINOUS OPEN-GRADED SURFACE SHALL BE FLUSH WITH THE EDGE OF THE GUTTER PAN IN THE AREA OF THE CURB RAMP. GRINDING WIDTH 9" MINIMUM. OR 12:1 PLANTMIX BITUMINOUS SURFACE MINIMUM. FOR RETROFIT.
6. ROUGH BROOM TEXTURE ON CURB RAMPS AND WINGS. TEXTURE SHALL PROVIDE A VISUAL CONTRAST TO THE SIDEWALK.
7. ALL RAMPS SHALL BE 12:1 OR FLATTER, 15' MAXIMUM LENGTH
8. ALL SLOPE RATES ARE RELATIVE TO LEVEL.
9. CONCRETE SHALL BE CLASS A OR AA.
10. ADJUST FLOWLINE WHEN REQUIRED TO PREVENT PONDING AT THE RAMP AND MAINTAIN POSITIVE DRAINAGE.
11. DETECTABLE WARNING SHALL BE INSTALLED PER MANUFACTURERS GUIDELINES AND CONFORM TO PROWAG (R304.1.3) "CONTRAST".
12. NO DIRECT PAYMENT FOR NEAT LINE SAW CUT. AN ADDITIONAL 1' OF PAVEMENT MAY BE REQUIRED. IF ELECTING TO REMOVE AN ADDITIONAL 1' MATCH EXISTING STRUCTURAL SECTION WITH PATCH; NO ADJUSTMENT TO THE PLAN QUANTITIES FOR REMOVAL AND PATCHING.

LEGEND:

* FROM 0" AT Ⓒ TO 6" AT Ⓓ

DETECTABLE WARNINGS

NEVADA DEPARTMENT OF TRANSPORTATION

CURB RAMPS
(EXISTING SIDEWALKS)

Signed Original On File	R-5.2.2	(613)
CHIEF ROAD DESIGN ENGR.	ADOPTED 7/96	REVISION 5/09

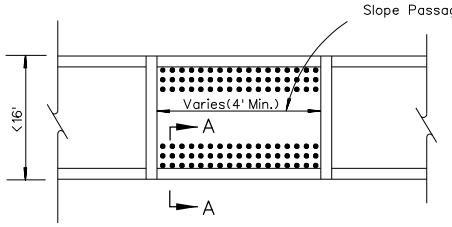

PLAN

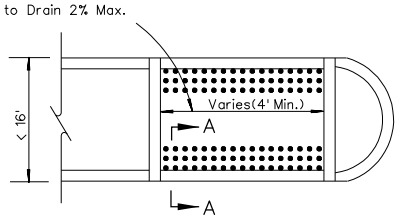

PLAN

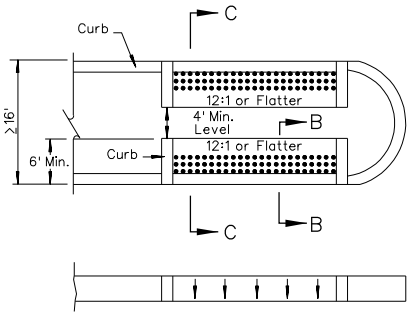

ELEVATION
TYPE C
OPTION TO USE TYPE B

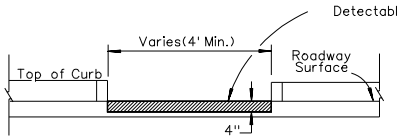

ELEVATION
Type A–At Mid Block

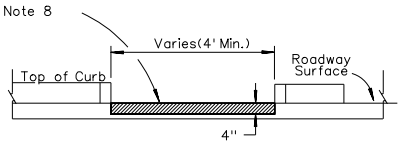

ELEVATION
Type B–At Nose

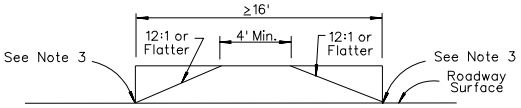

SECTION C–C

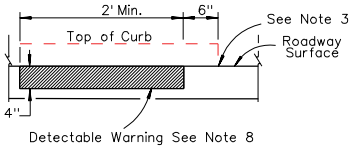

SECTION A–A

NOTES:

1. ALL CURB RAMPS SHALL BE 12:1 OR FLATTER.
2. GRATING, MANHOLES, VALVE COVERS, OR SIMILAR ACCESSES SHALL NOT BE LOCATED IN AREA AT THE BASE OF THE CURB RAMP OR LANDING AREA.
3. TRANSITIONS FROM RAMPS TO GUTTERS OR ROADWAY SURFACE SHALL BE FLUSH AND FREE OF ABRUPT CHANGES.
4. PLANTMIX BITUMINOUS OPEN-GRADED SURFACE SHALL BE FLUSH WITH THE EDGE OF THE GUTTER PAN IN THE AREA OF THE CURB RAMP.
5. ROUGH BROOM TEXTURE ON CURB RAMPS AND WINGS, TEXTURE SHALL PROVIDE A VISUAL CONTRAST TO THE MEDIAN ISLAND.
6. CONCRETE SHALL BE CLASS A OR AA.
7. AVOID DRAINAGE POCKETS IN CROSS WALK AREAS.
8. DETECTABLE WARNING SHALL BE INSTALLED PER MANUFACTURERS GUIDELINES AND CONFORM TO PROWAG (R304.1.3) "CONTRAST".

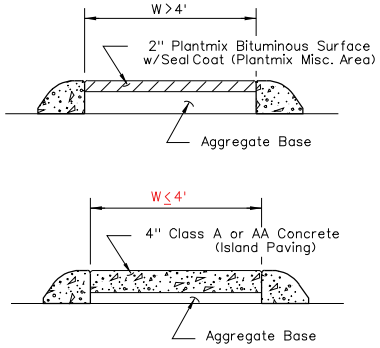

TYPICAL ISLAND PAVING DETAILS

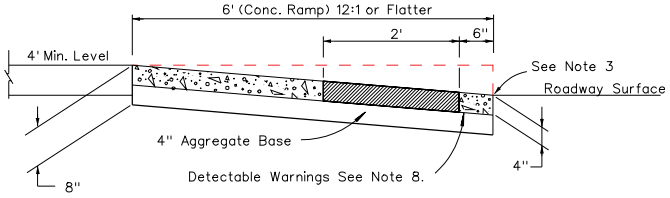

SECTION B–B

LEGEND:

DETECTABLE WARNINGS

NEVADA DEPARTMENT OF TRANSPORTATION

MEDIAN ISLANDS,
CURB RAMPS, AND
ISLAND PAVING

Signed Original On File	R-5.2.3	(613)
CHIEF ROAD DESIGN ENGR.	ADOPTED 7/96	REVISION 5/09

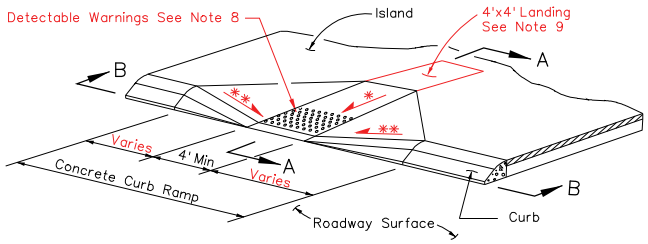

ISOMTRIC VIEW

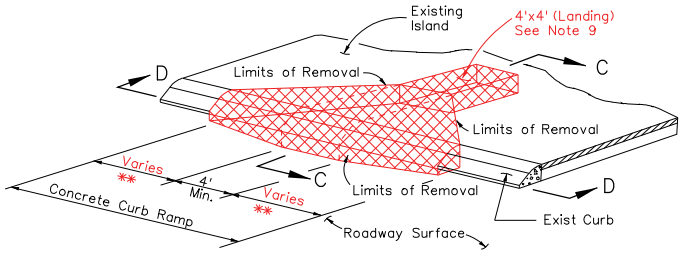

EXISTING ISLAND REMOVAL

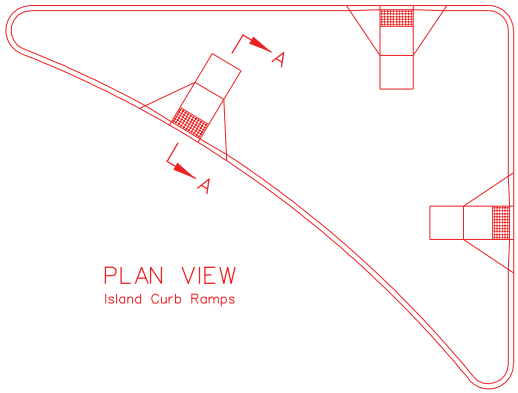

PLAN VIEW
Island Curb Ramps

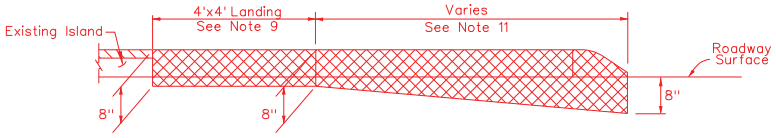

SECTION C-C

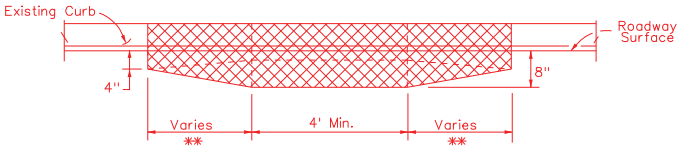

SECTION D-D

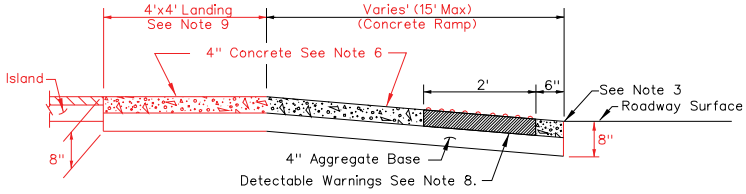

SECTION A-A

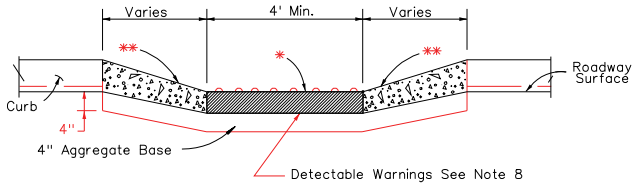

SECTION B-B

NOTES:

1. ALL CURB RAMPS SHALL BE 12:1 OR FLATTER. ALL SLOPE RATES ARE RELATIVE TO LEVEL.
2. GRATING, MANHOLES, VALVE COVERS OR SIMILAR APPURTENANCES SHALL NOT BE LOCATED IN AREA AT THE BASE OF THE CURB RAMP OR LANDING AREA.
3. TRANSITIONS FROM RAMPS TO GUTTERS OR ROADWAY SURFACE SHALL BE FLUSH AND FREE OF ABRUPT CHANGES.
4. PLANTMIX BITUMINOUS OPEN-GRADED SURFACE SHALL BE FLUSH WITH THE EDGE OF THE GUTTER PAN IN THE AREA OF THE CURB RAMP.
5. ROUGH BROOM TEXTURE ON CURB RAMPS AND WINGS. TEXTURE SHALL PROVIDE A VISUAL CONTRAST TO THE MEDIAN ISLAND.
6. CONCRETE SHALL BE CLASS A OR AA.
7. AVOID DRAINAGE POCKETS IN CROSS WALK AREAS.
8. DETECTABLE WARNINGS SHALL BE INSTALLED PER MANUFACTURERS GUIDELINES AND CONFORM TO PROWAG (R304.1.3) "CONTRAST" AND (R304.2) "LOCATION & ALIGNMENT".
9. 4'x4' LANDING SHALL BE PROVIDED AND CONFORM TO PROWAG. (R303.2.1.3). "LANDING" AND (R301.5) "SURFACE".
10. SEE PLANS FOR LOCATION OF CURB RAMPS.
11. 15' MAXIMUM TO ACCOMODIATE 12:1 OR FLATTER CONCRETE RAMP.

LEGEND:

= LIMITS OF REMOVAL

* = 12:1 OR FLATTER

** = 10:1

NEVADA DEPARTMENT OF TRANSPORTATION

CHANNELING ISLAND
CURB RAMPS

Signed Original On File	R-5.2.4	(613)
CHIEF ROAD DESIGN ENGR.	ADOPTED 2/03	REVISION 5/09

DIMENSION LIMITS (SEE NOTE 6)	
W= 12' MINIMUM FOR ONE-WAY DRIVEWAYS 24' MINIMUM FOR TWO-WAY DRIVEWAYS 40' MAXIMUM	D = THROAT DEPTH 25' MINIMUM 35' MINIMUM FOR > 50 CARS/ DAY 65' MINIMUM FOR > 150 CARS/ DAY 100' MINIMUM FOR > 300 CARS/ DAY
B= 20' MINIMUM & 25' MAXIMUM	R2 = 25' MIN.
C= 7' MINIMUM, FACE TO FACE	
E= 50' MINIMUM	
H= 8' MINIMUM & 15' MAXIMUM	
R1= 25' MINIMUM	

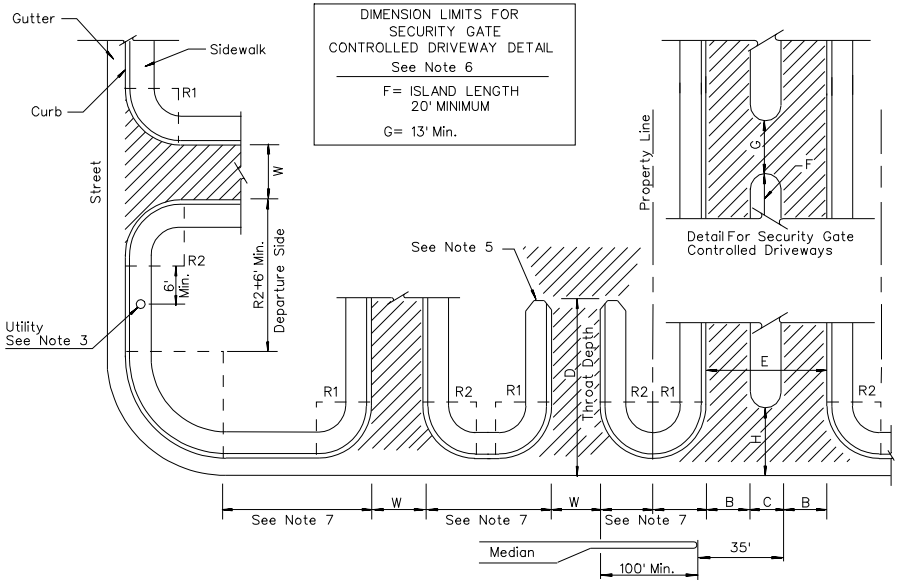

DIMENSION LIMITS FOR SECURITY GATE CONTROLLED DRIVEWAY DETAIL
See Note 6

F= ISLAND LENGTH 20' MINIMUM

G= 13' Min.

Detail For Security Gate Controlled Driveways

NOTES:

1. TYPE C DRIVEWAYS SHALL BE CONSTRUCTED IN ACCORDANCE WITH SHEET R-5.3.3.
2. THE TOTAL WIDTH OF DRIVEWAY CURB OPENINGS SHALL NOT EXCEED 65% OF FRONT FOOTAGE.
3. NO DRIVEWAY SHALL BE LOCATED WITHIN 6' OF A LIGHT POLE, FIRE HYDRANT, MAIL BOX, ABOVE-GROUND ELECTRICAL TRANSFER BOX, OR BLOCK WALL HIGHER THAN 2'.
4. THE CENTERLINES OF DRIVEWAYS ON OPPOSITE SIDES OF THE STREET AT A MEDIAN OPENING SHOULD BE D±10' FROM EACH OTHER. WHEN A PROPERTY LINE FALLS IN A MEDIAN OPENING A JOINT DRIVEWAY AGREEMENT SHALL BE REQUIRED OR NO DRIVEWAY WILL BE ALLOWED.
5. HANDICAPPED ACCESSIBLE SIDEWALKS SHALL BE PROVIDED. SEE SHEETS R-5.2.1 TO R-5.2.2 & R-5.3.3.
6. FOR ACTUAL DIMENSIONS SEE STRUCTURE LIST.
7. DRIVEWAY SPACING, CLEARANCES, AND RETURN RADII SHALL BE IN ACCORDANCE WITH THE DEPARTMENT'S ACCESS MANAGEMENT STANDARDS.

TYPE C, COMMERCIAL, INDUSTRIAL, AND MULTI-FAMILY DRIVEWAY GEOMETRICS

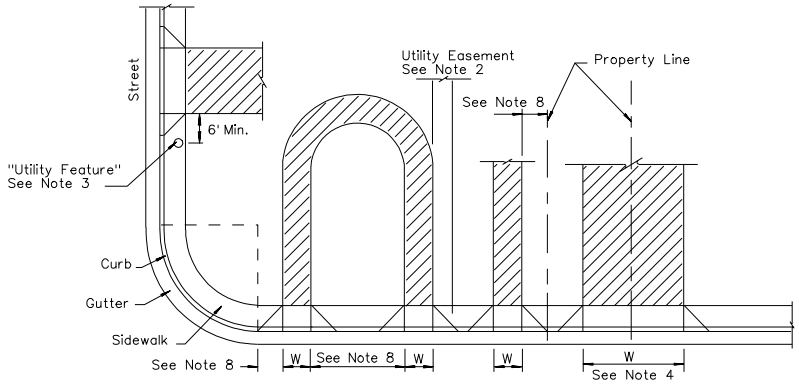

LEGEND:

W – Width of Driveway, 12' Minimum:
For 1-2 Car Garage; 16' Maximum
For 3+Car Garage, 28' Maximum.

NOTES:

1. ALL RESIDENTIAL PROPERTIES MAY HAVE ONLY ONE CURB CUT EXCEPT CIRCULAR DRIVEWAYS AS SHOWN.
2. NO DRIVEWAY SHALL BE LOCATED, WHOLLY OR PARTIALLY, ON OR OVER A UTILITY EASEMENT WHICH RUNS PERPENDICULAR TO THE CURB LINE.
3. NO DRIVEWAY SHALL BE LOCATED WITHIN 6' OF A LIGHT POLE, FIRE HYDRANT, MAIL BOX, ABOVE-GROUND ELECTRICAL TRANSFER BOX. BLOCK WALL HIGHER THAN 2', OR THE CURB RETURN AT A STREET INTERSECTION OR ALLEY.
4. COMMON DRIVEWAY CONSTRUCTION MAY BE PERMITTED AT ANY TWO RESIDENTIAL PROPERTIES OF 60' IN WIDTH OR LESS. THE WIDTH OF THE JOINT DRIVEWAY SHALL BE A MAXIMUM OF 24'. A JOINT DRIVEWAY AGREEMENT SHALL BE REQUIRED.
5. MULTI-FAMILY RESIDENTIAL AND ALL NON-RESIDENTIAL DRIVEWAYS SHALL CONFORM TO THE COMMERCIAL DRIVEWAY STANDARDS.
6. ALL DRIVEWAY LOCATIONS SHALL BE SUBJECT TO REVIEW AND APPROVAL BY THE ENGINEER.
7. FOR CURB RAMPS AND DRIVEWAY APRON DETAIL, SEE SHEETS R-5.2.1 TO R-5.2.2 & R-5.3.2.
8. DRIVEWAY SPACING, CLEARANCES, AND RETURN RADII SHALL BE IN ACCORDANCE WITH THE DEPARTMENT'S ACCESS MANAGEMENT STANDARDS.

TYPE R, RESIDENTIAL DRIVEWAY GEOMETRICS

NEVADA DEPARTMENT OF TRANSPORTATION

DRIVEWAY GEOMETRICS
TYPE C AND TYPE R

Signed Original On File	R-5.3.1	(613)
CHIEF ROAD DESIGN ENGR.	ADOPTED 1/95	REVISION 10/02

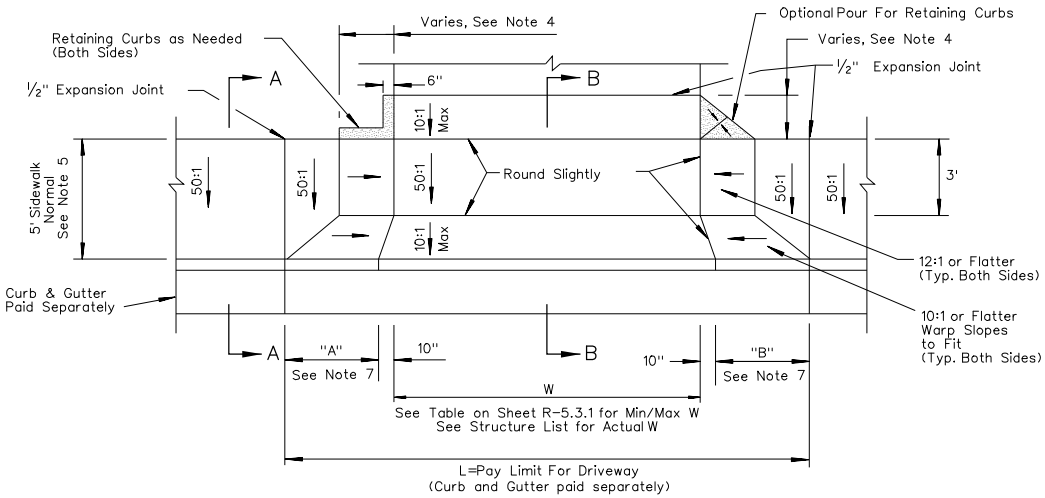

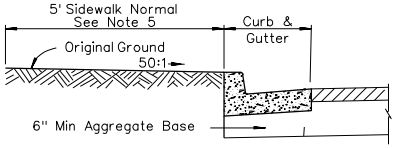

SECTION A-A
(ORIGINAL GROUND)

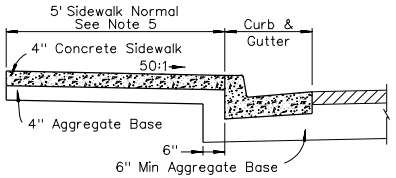

SECTION A-A
(CONCRETE)

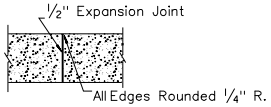

TYPICAL EXPANSION JOINT DETAIL
(ELEVATION)

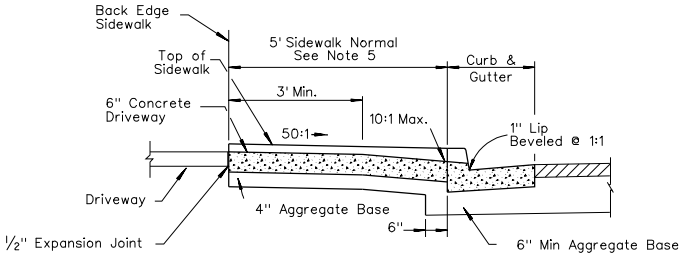

SECTION B-B
Type B (Used With Constrained R/W)
(CONCRETE)

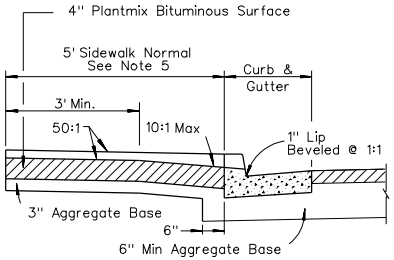

SECTION B-B
(BITUMINOUS SURFACE)

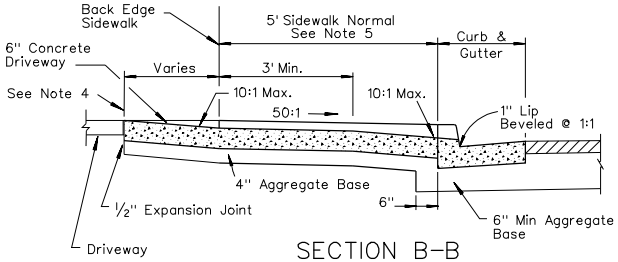

SECTION B-B
Type A (Preferred)
(CONCRETE)

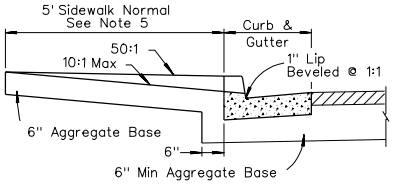

SECTION B-B
(AGGREGATE)

NOTES:

1. ALL RAMPS SHALL BE 12:1 OR FLATTER.
2. CONCRETE DRIVEWAY CAN BE POURED MONOLITHICALLY WITH CURB AND GUTTER.
3. ALL SLOPE RATES ARE RELATIVE TO LEVEL.
4. LENGTH VARIES ACCORDING TO CURB AND GUTTER PROFILE. RETAINING CURBS AND ACQUISITION OF CONSTRUCTION EASEMENTS MAY BE NECESSARY.
5. IF THERE ARE R/W RESTRICTIONS, SIDEWALK WIDTHS CAN BE REDUCED TO 4' WITH PRIOR APPROVAL FROM ASSISTANT CHIEF ROAD DESIGN ENGINEER. A 5'x 5' PASSING ZONE IS REQUIRED EVERY 200' PER ADA. APPENDIX C, SECTION 4.3.4.
6. CONCRETE SHALL BE CLASS A OR AA.
7. SEE TABLE 1-10, ON SHEET R-5.2.1.

NEVADA DEPARTMENT OF TRANSPORTATION

SINGLE FAMILY DRIVEWAYS
WITH CURB

Signed Original On File	R-5.3.2	(613)
CHIEF ROAD DESIGN ENGR.	ADOPTED 7/96	REVISION 12/04

DIMENSION LIMITS (SEE NOTE 7)
W= 12' MINIMUM FOR ONE-WAY DRIVEWAYS 24' MINIMUM FOR TWO-WAY DRIVEWAYS 40' MAXIMUM
(S) = WIDTH OF SIDEWALK (G) = WIDTH OF VALLEY GUTTER (FROM EDGE OF GUTTER TO BACK OF SIDEWALK)

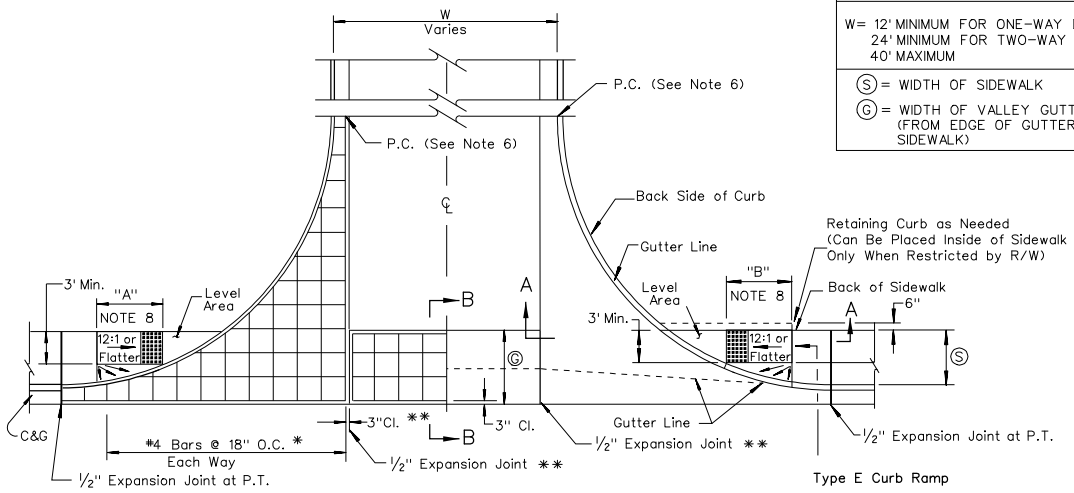

Type E Curb Ramp

PLAN

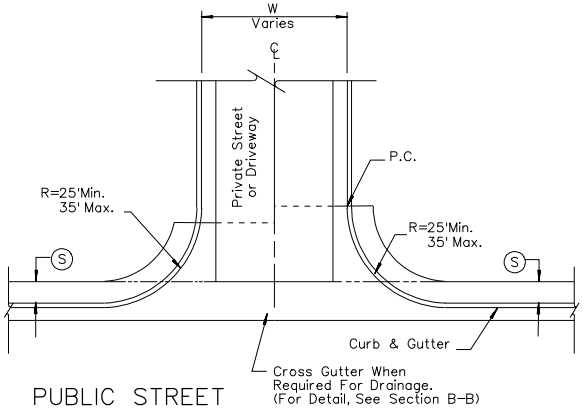

PUBLIC STREET

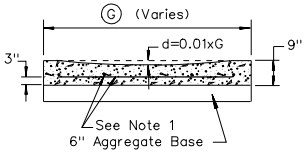

SECTION B-B

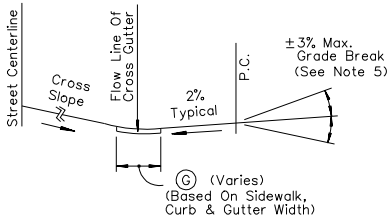

TYPICAL CROSS SECTION @ ℄

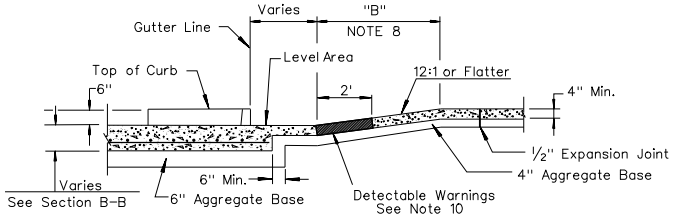

SECTION A-A

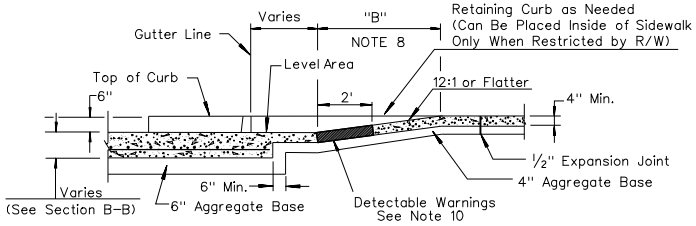

SECTION A-A WITH RETAINING CURB

NOTES:

1. SPACING OF NO.4 BARS LESS THAN 18" TO MEET LOCAL CODES SHALL BE NOTED IN THE STRUCTURE LIST.
2. WHEN CONSTRUCTING DRIVEWAYS WHERE CURB AND GUTTER EXISTS, COMPLETELY REMOVE EXISTING SECTIONS. DRIVEWAY MAY BE POURED MONOLITHIC TO A.C. LINE, IN WHICH CASE THE BARS SHALL BE CONTINUOUS. IF OPTIONAL SECTIONAL POUR IS USED, EXPANSION JOINTS AND REBAR END CLEARANCE SHALL APPLY AS SHOWN.
3. CONCRETE SHALL BE CLASS A OR AA.
4. CURB RAMPS SHALL BE CONSTRUCTED IN ACCORDANCE WITH SHEETS R-5.2.1, R-5.2.2, AND R-5.3.1.
5. FOR GRADE CHANGES GREATER THAN 3%, VERTICAL CURVES OF AT LEAST 10' MUST BE USED.
6. DRIVEWAY GEOMETRICS SHALL GO TO THE P.C.
7. FOR ACTUAL DIMENSIONS, SEE STRUCTURE LIST.
8. SEE TABLE 1-12 ON SHEET R-5.2.2, FOR "A" AND "B".
9. AVOID DRAINAGE POCKETS IN CROSS WALK AREAS.
10. DETECTABLE WARNINGS SHALL BE INSTALLED PER MANUFACTURERS GUIDELINES AND CONFORM TO ADAAG 4.29.2 "CONTRAST".

LEGEND:

* SEE NOTE 1

** SEE NOTE 2 FOR OPTIONAL SECTIONAL POUR

DETECTABLE WARNINGS

NEVADA DEPARTMENT OF TRANSPORTATION

MULTI-FAMILY, COMMERCIAL & INDUSTRIAL DRIVEWAY DETAILS

Signed Original On File	R-5.3.3	(613)
CHIEF ROAD DESIGN ENGR.	ADOPTED 7/96	REVISION 6/04

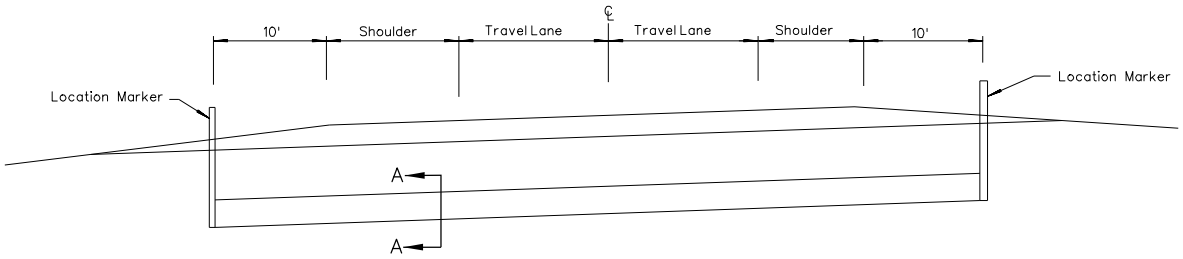

FREEWAY CROSSING DETAIL

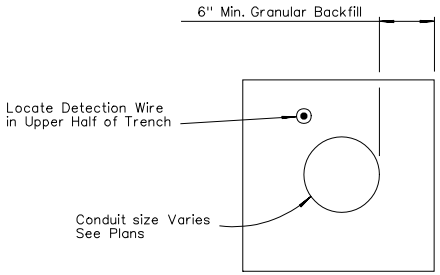

SECTION A-A

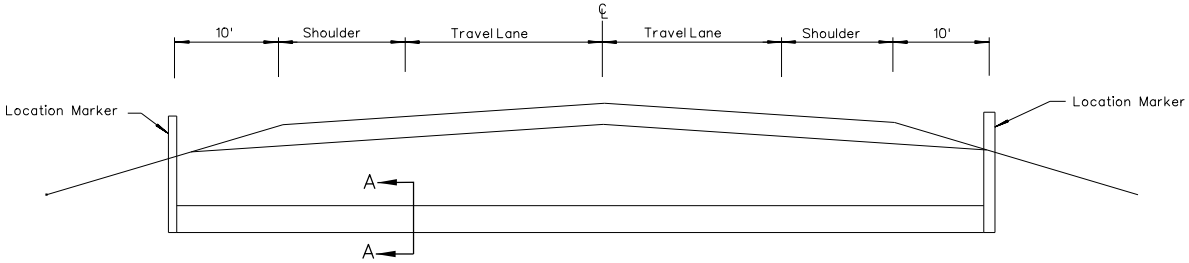

FRONTAGE ROAD DETAIL

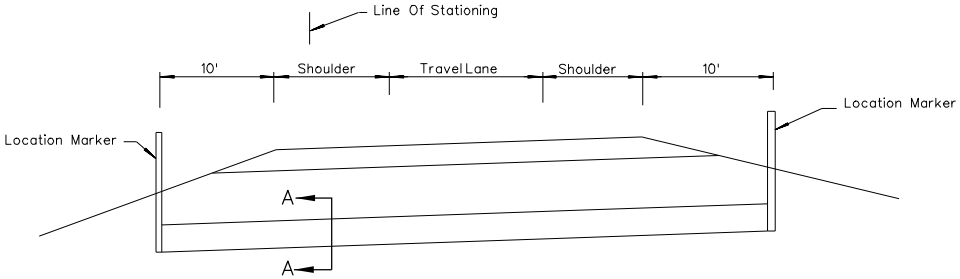

RAMP CROSSING DETAIL

NOTES:

1. MINIMUM 3' COVER OVER TOP OF CONDUIT AT SHOULDER LINE.
2. 12 GAGE BARE COPPER DETECTION WIRE TO LAY IN TRENCH ADJACENT TO CONDUIT AND ATTACH TO LOCATION MARKER AT EACH END.
3. LOCATION MARKER SHALL BE 2" PVC OR 5' STEEL FENCE POSTS.

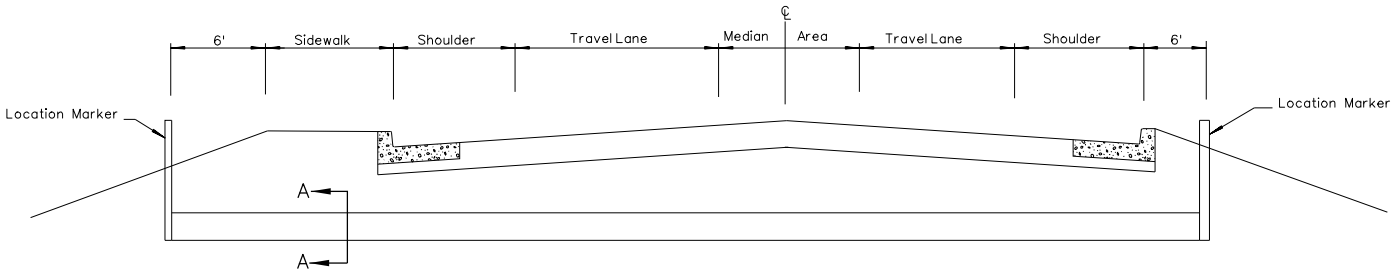

CROSSROAD DETAIL

NEVADA DEPARTMENT OF TRANSPORTATION

CONDUIT INSTALLATION
FOR
FUTURE WATER LINES

Signed Original On File	R-5.4.1	(213)
CHIEF ROAD DESIGN ENGR.	ADOPTED 5/73	REVISION 2/98

SIZE OF POSTS-STANDARD FENCING								
FENCE HEIGHT	CORNER, END & PULL			LINE		BRACES		
	ROUND PIPE O.D.	MIN. WT. (LBS/L.F.)		T-SECTION	MIN. WT. (LBS/L.F.)	ROUND PIPE O.D.	MIN. WT. (LBS/L.F.)	
		CLASS 1	CLASS 2				CLASS 1	CLASS 2
3'to 6'	2.375"	3.65	2.64	———	1.30	1.660"	2.27	1.45

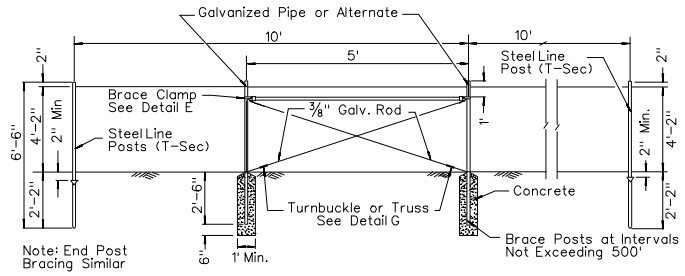

INTERMEDIATE BRACED POST
TYPE A FENCE

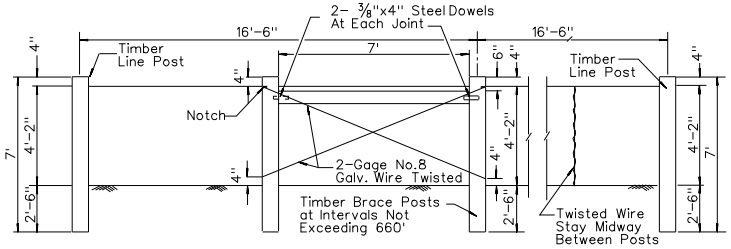

INTERMEDIATE BRACED POST
TYPE B FENCE

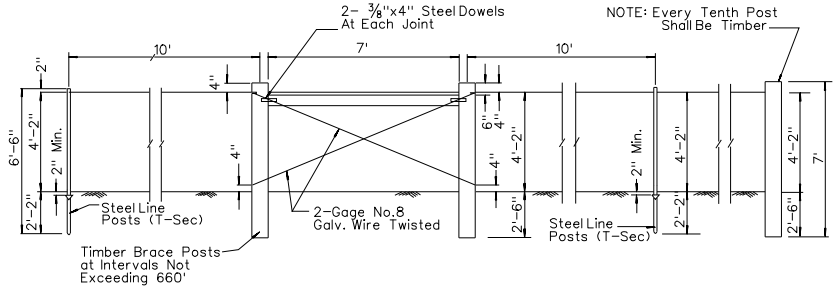

INTERMEDIATE BRACED POST
TYPE C FENCE

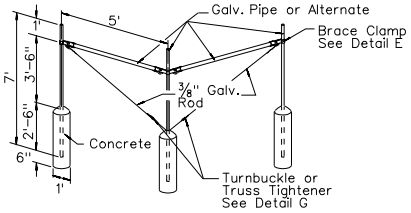

CORNER BRACE FOR TYPE A FENCE

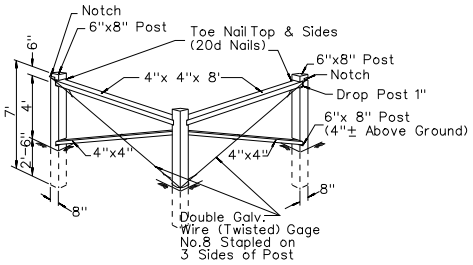

TIMBER CORNER BRACE

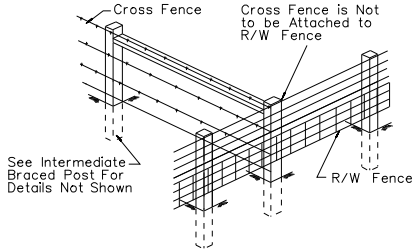

TYPICAL EXISTING CROSS FENCE TIE

NOTES:

1. FENCE POSTS AND MATERIALS SHALL CONFORM TO THE REQUIREMENTS OF STANDARD SPECIFICATIONS AND SUPPLEMENTS.
2. STANDARD FENCING SHALL CONSIST OF GALVANIZED BARBED WIRE. GALVANIZED WOVEN WIRE (FARM FENCE) OR A COMBINATION OF BOTH ON WOOD OR METAL POSTS OR COMBINATIONS OF POSTS.
3. BARBED WIRE SHALL BE SPACED AS FOLLOWS:
   4 WIRE - BOTTOM WIRE 15½" ABOVE GROUND, OTHER SPACING 11½".
   5 WIRE - BOTTOM WIRE 10" ABOVE GROUND, OTHER SPACING 10".
4. STANDARD FENCING WILL BE DESIGNATED BY TYPE, DESIGN OF FABRIC, AND/OR NUMBER OF BARBED WIRES. THUS:

   TYPE A-881-3B DESIGNATES METAL POSTS, 32" WOVEN (FARM) WIRE, AND 3 BARBED WIRES.

   TYPE B-4B DESIGNATES WOOD POSTS, 4 BARBED WIRES.

   TYPE C-766-4B DESIGNATES COMBINATION OF WOOD AND METAL POSTS, 26" WOVEN (FARM) WIRE, 4 BARBED WIRES.
5. CONCRETE SHALL BE CLASS A OR AA.
6. MANUFACTURE STEEL LINE POSTS (T-SEC) TO TOLERANCES AND WORKMANSHIP AS PROVIDED IN AASHTO M281.

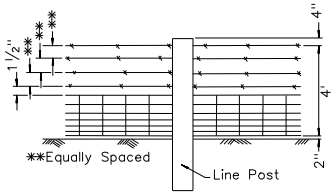

TYPICAL DETAIL OF WOVEN WIRE & BARBED WIRE FENCE APPLICABLE TO TYPE A, B, & C FENCING

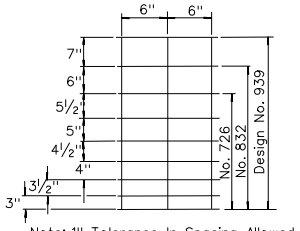

Note: 1" Tolerance In Spacing Allowed Above Bottom Space

WOVEN WIRE FABRIC (FARM FENCE)

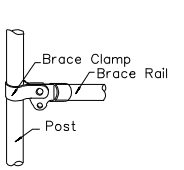

DETAIL E

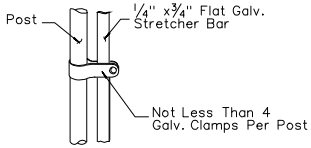

DETAIL F

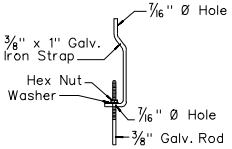

DETAIL G
TRUSS TIGHTENER

NEVADA DEPARTMENT OF TRANSPORTATION

FENCE DETAILS

Signed Original On File	R-6.1.1	(616,724)
CHIEF ROAD DESIGN ENGR.	ADOPTED 8/69	REVISION 10/02

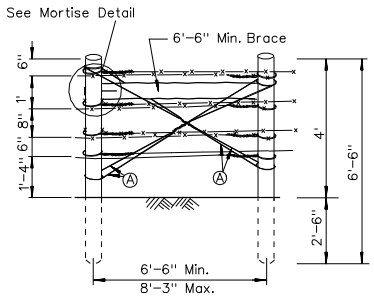

STRESS PANEL

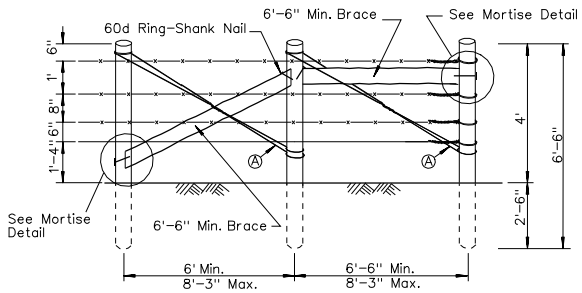

END PANEL

NOTES:

1. STRESS PANELS SHALL BE PLACED EVERY 1320' ON TANGENTS.
2. STRESS PANELS SHALL BE PLACED EVERY 660' ON CURVES.
3. END PANELS SHALL BE USED WHEREVER A BREAK IN THE FENCE OCCURS (I.E. GATES, CATTLEGUARDS), AND AT BEGINNING AND ENDING OF ALL CURVES.
4. SEE TABLE A FOR WOOD POST SPACING ON CURVES.
5. BARBED WIRE SHALL BE USED FOR BOTTOM STRAND WHEN REQUIRED BY NEVADA DEPARTMENT OF WILDLIFE OR BUREAU OF LAND MANAGEMENT.
6. WIRES ARE TO BE TIED OFF AT STRETCH POINTS. WRAP AND SPLICE TO SELF WITH AT LEAST 4 TURNS AT OPPOSITE END OF PANELS.
7. WOOD POSTS SHALL BE 6" NOMINAL DIAMETER.
8. ADD ADDITIONAL STRAND OF BARBED WIRE AND/OR ROCK DEADMAN (MINIMUM WEIGHT 50 LBS.) WHEN SPACE BETWEEN BOTTOM WIRE AND GROUND EXCEEDS 20".
9. STEEL POST DEADMAN DRIVEN APPROXIMATELY 3' INTO GROUND MAY BE USED IN LIEU OF ROCK DEADMAN.

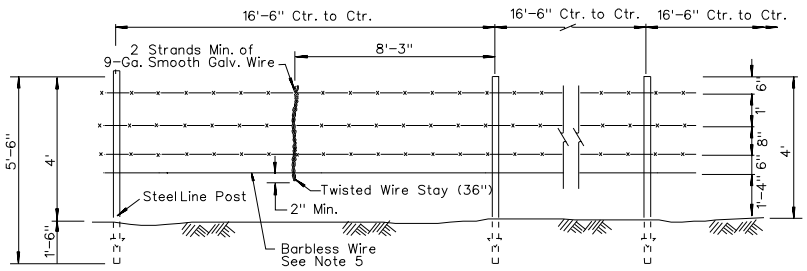

LINE PANELS

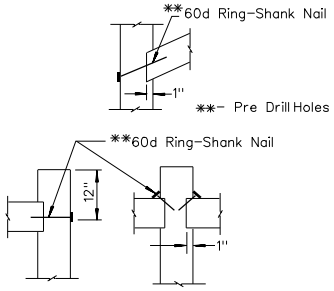

MORTISE DETAIL

TABLE A: WOOD POST SPACING ON CURVED FENCE LINES	
RADIUS OF CURVE AT FENCE LINE (FT.)	RATIO (STEEL POST : WOOD POST)
<1,000	3:1
1,000 TO 2,500	4:1
2,500 TO 5,000	7:1
5,000 TO 10,000	NO WOOD POST NEEDED BETWEEN STRESS PANELS AT 660'
>10,000	TREAT CURVE AS TANGENT

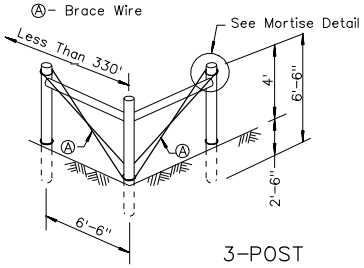

3-POST
CORNER PANEL

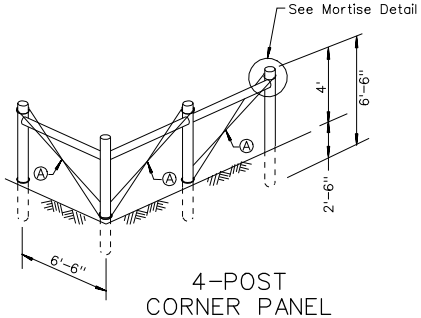

4-POST
CORNER PANEL

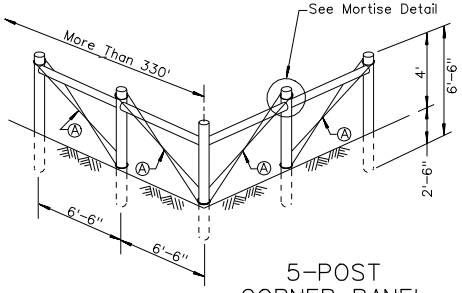

5-POST
CORNER PANEL

NEVADA DEPARTMENT OF TRANSPORTATION

NEVADA 4-WIRE FENCE
PANEL DETAILS
(TYPE C-NV-4B)

Signed Original On File	R-6.1.2	(616,724)
CHIEF ROAD DESIGN ENGR.	ADOPTED 7/96	REVISION 10/98

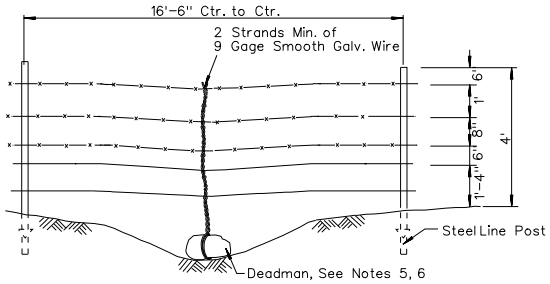

PANEL AT MINOR DEPRESSION OR INTERMITTENT STREAM

NOTES:

1. HINGE POST SHALL BE 8' IN LENGTH AND SHALL BE BURIED 3' IN GROUND.
2. BARBED WIRE SHALL BE USED FOR BOTTOM STRAND WHEN REQUIRED BY NEVADA DEPARTMENT OF WILDLIFE OR BUREAU OF LAND MANAGEMENT.
3. WIRES ARE TO BE TIED OFF AT STRETCH POINTS. WRAP AND SPLICE TO SELF WITH AT LEAST 4 TURNS AT OPPOSITE END OF PANELS.
4. WOOD POSTS SHALL BE 6" NOMINAL DIAMETER.
5. ADD ADDITIONAL STRAND OF BARBED WIRE AND/OR A ROCK DEADMAN (MINIMUM WEIGHT 50 LBS.) WHEN SPACE BETWEEN BOTTOM WIRE AND GROUND EXCEEDS 20".
6. STEEL POST DEADMAN DRIVEN APPROXIMATELY 3' INTO GROUND MAY BE USED IN LIEU OF ROCK DEADMAN.
7. STEEL LINE POSTS AT 8'-3" SPACING TO MAINTAIN BOTTOM WIRE CLEARANCE.

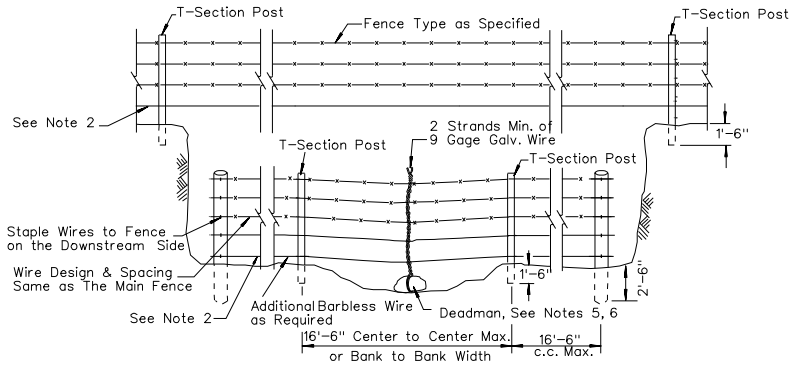

MINOR DRAINAGE CROSSING

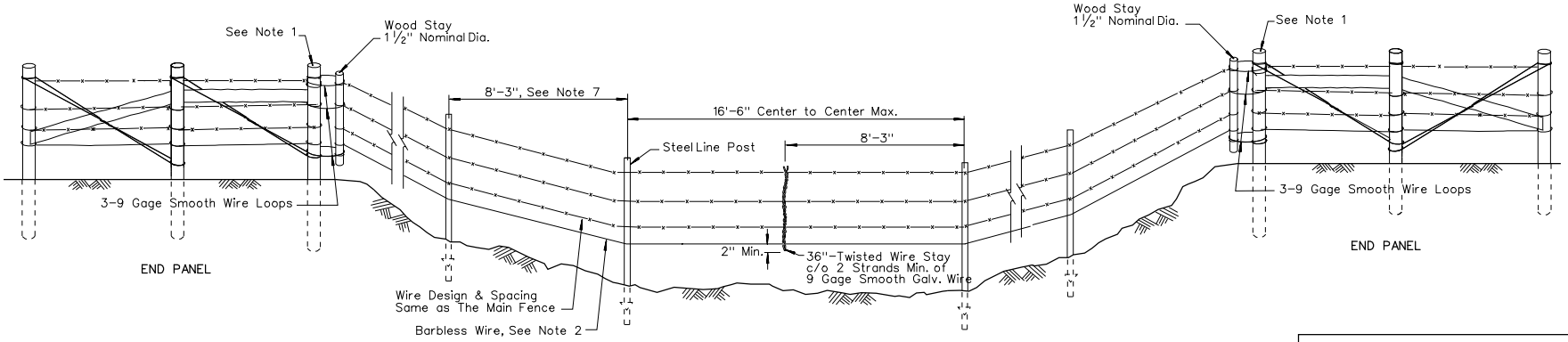

MAJOR DRAINAGE CROSSING

NEVADA DEPARTMENT OF TRANSPORTATION

NEVADA 4-WIRE FENCE
PANEL DETAILS
(TYPE C-NV-4B)

Signed Original On File	R-6.1.2.1		(616,724)
CHIEF ROAD DESIGN ENGR.	ADOPTED 7/96	REVISION 6/04	

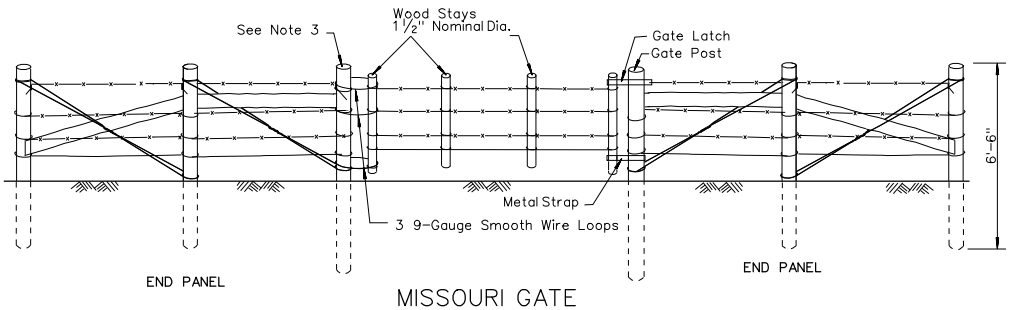

MISSOURI GATE

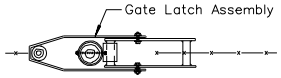

PLAN

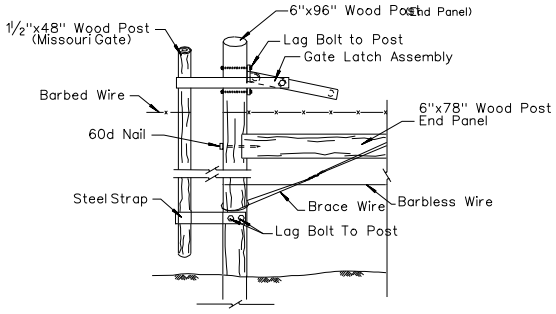

TYPICAL GATE LATCH

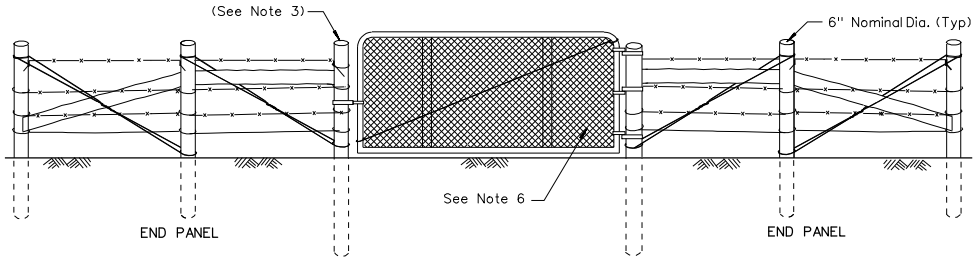

METAL DRIVE GATE

NOTES:

1. SPACING BETWEEN WIRES ON MISSOURI GATE SHALL BE THE SAME AS WIRES ON ADJACENT FENCE.
2. GATE LATCH SHALL BE LAG BOLTED FIRMLY TO THE GATE POST.
3. HINGE POSTS, LATCH POSTS, AND CATTLE GUARD WING ATTACHMENT POSTS SHALL BE 8' IN LENGTH AND SHALL BE BURIED 3' IN GROUND.
4. FOR END PANEL DETAILS, SEE SHEET R-6.1.2.
5. WIRE MAY BE USED IN LIEU OF METAL STRAP FOR CONNECTION OF CATTLEGUARD WING TO FENCE POST.
6. USE RECTANGULAR MESH OR 2" DIAMOND MESH ON METAL DRIVE GATE.

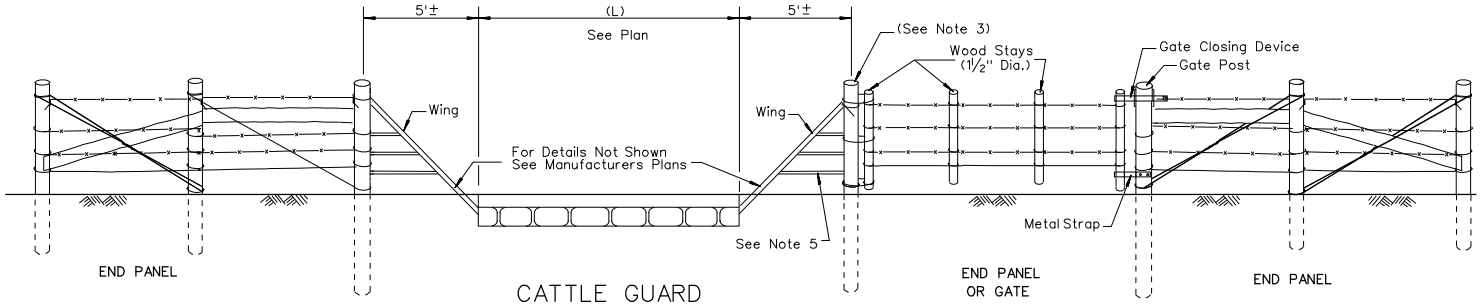

CATTLE GUARD

NEVADA DEPARTMENT OF TRANSPORTATION

NEVADA 4-WIRE FENCE
GATE DETAILS
(TYPE C-NV-4B)

Signed Original On File	R-6.1.2.2	(616,724)	
CHIEF ROAD DESIGN ENGR.	ADOPTED 10/98	REVISION 10/00	

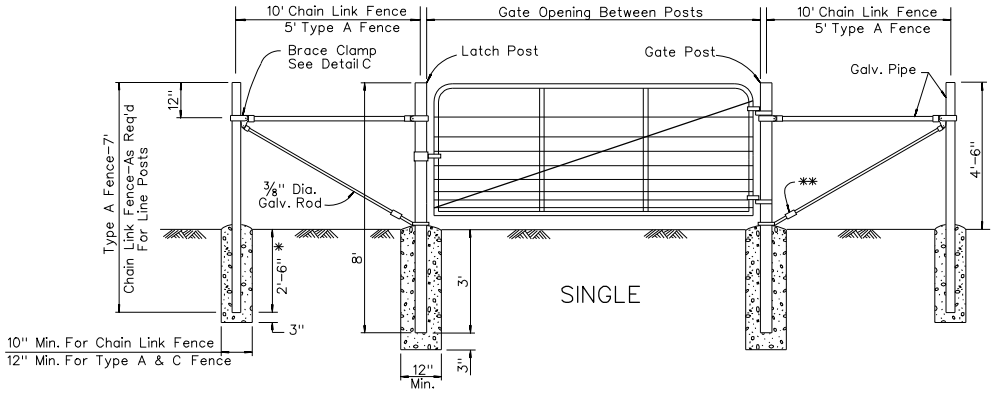

SINGLE

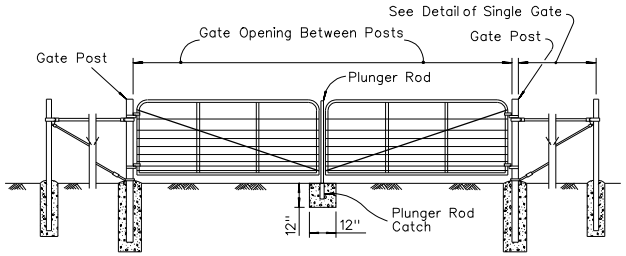

DOUBLE

NOTE:
Bracing Shown Is For Type A Fencing. For Intermediate Braced Post Type A Detail, See R-6.1.1 When Type A Fence Is Specified.

LEGEND:

* - 3' For Fabric Over 60"

** - Turnbuckle or Truss Tightener See Detail B

Metal Drive Gate Post Size		
Gate Opening	Pipe O.D. Min. (in.)	Pipe Min. Weight Lbs. per Lin.Ft.
Single to 6' or Double to 12'	2.375	3.65
Single over 6' to 13' or Double over 12' to 26'	4.000	9.11
Single over 13' to 18'	6.625	18.97

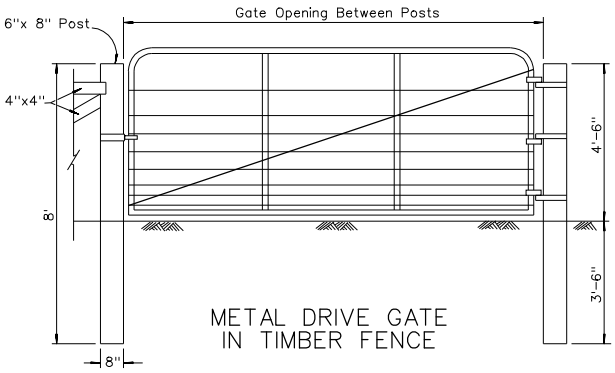

METAL DRIVE GATE
IN TIMBER FENCE

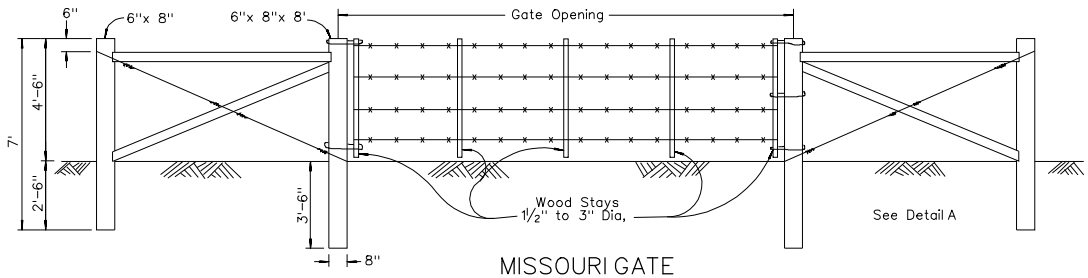

MISSOURI GATE

NOTES:

1. STANDARD GATES, CHAIN LINK GATES, AND WALK GATES SHALL BE CONSTRUCTED AS SPECIFIED IN THE STANDARD SPECIFICATIONS.
2. BRACED POSTS AND BRACES SHALL CONFORM TO THE REQUIREMENTS OF THE STANDARD SPECIFICATIONS.
3. LUMBER USED IN THE CONSTRUCTION OF TIMBER GATES SHALL CONFORM TO THE REQUIREMENTS OF THE STANDARD SPECIFICATIONS.
4. CONCRETE SHALL BE CLASS A OR AA.

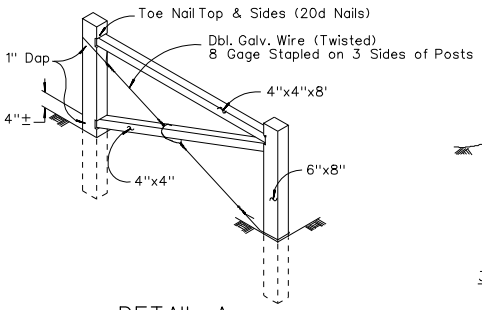

DETAIL A

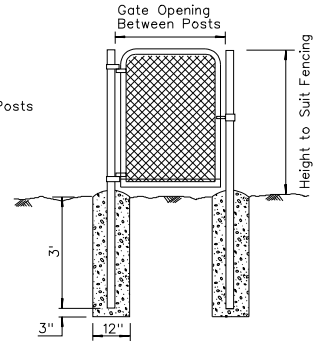

WALK GATE

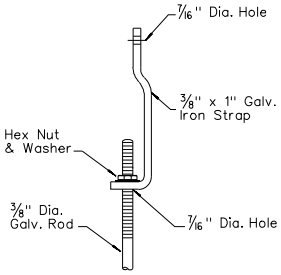

DETAIL B
TRUSS TIGHTENER

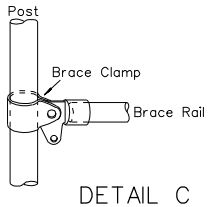

DETAIL C

NEVADA DEPARTMENT OF TRANSPORTATION

GATE AND
FENCE DETAILS

Signed Original On File	R-6.1.3	(616,724)
CHIEF ROAD DESIGN ENGR.	ADOPTED 8/69	REVISION 1/05

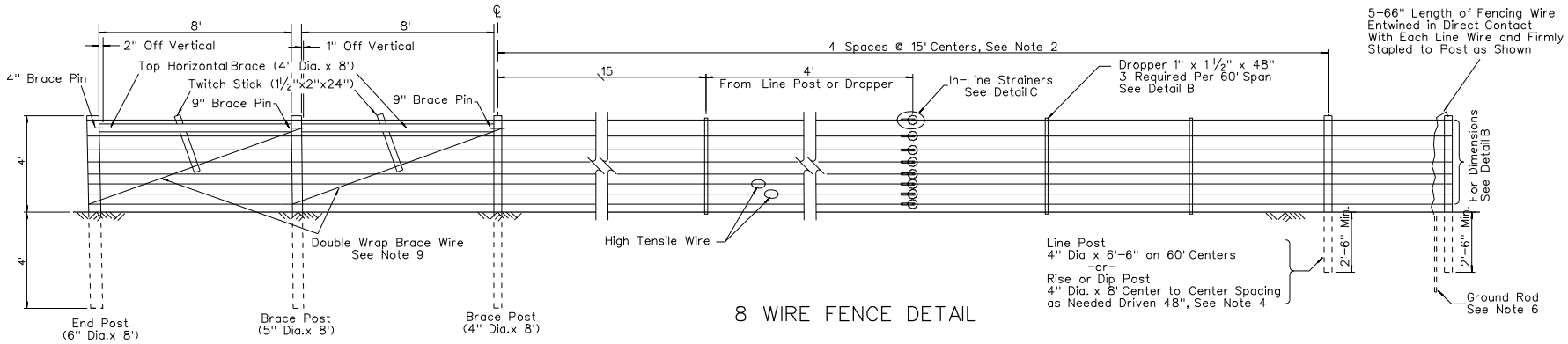

8 WIRE FENCE DETAIL

DOUBLE BRACE END ASSEMBLY

NOTE: Farm Gate 12' or Less May Be Installed on Post After Final Wire Tensioning.

DETAIL C

IN-LINE WIRE STRAINERS & TENSION INDICATOR SPRING

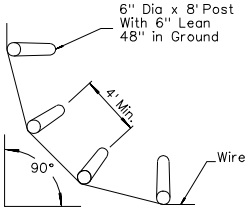

ALTERNATE FOUR POST CORNER ASSEMBLY

PLAN

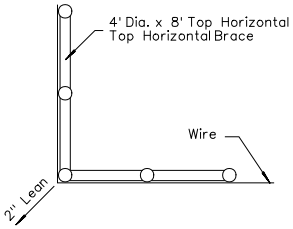

DOUBLE BRACE CORNER ASSEMBLY (FOR DETAILS-SEE ABOVE)

PLAN

CONSTRUCTION NOTES:

1. END POSTS AND LINE POSTS ARE RECOMMENDED TO BE MECHANICALLY DRIVEN INTO THE GROUND WHERE SOIL CONDITIONS PERMIT, TO BE DETERMINED BY THE ENGINEER.
2. MAXIMUM POST SPACING IS 60' ON LEVEL TERRAIN WITH DROPPERS ON 15' CENTERS. POST SPACING MAY BE DECREASED DUE TO TERRAIN CONDITIONS. DROPPER SPACING WILL REMAIN ON 15' MAX. CENTERS. MINIMUM LINE POST SPACING WILL BE ON 15' CENTERS WITHOUT DROPPERS, WITH 4" DIAMETER, SMALL END, LINE POST WHEN NEEDED.
3. PLACEMENT OF IN-LINE STRAINERS SHALL BE AS CLOSE TO THE CENTER OF THE FENCE RUN AS POSSIBLE. PLACEMENT OF TENSION INDICATOR SPRING SHALL BE ON THE SECOND WIRE FROM THE TOP. COMPRESSION OF THE INDICATOR SPRING BY 1¾" WILL INDICATE A TENSION OF APPROXIMATELY 250 LBS. (+ 10 LBS.).
4. MAXIMUM LENGTH OF WIRE PER IN-LINE STRAINER ON LEVEL TERRAIN: STRAIGHT=5000'; 1-90 DEGREE CORNER: 3000'; 2-90 DEGREE CORNERS: 2000'; 3-90 DEGREE CORNERS: 1500'; 4-90 DEGREE CORNERS: 1000'. FOR UNEVEN TERRAIN REDUCE DISTANCES BY 500' FOR EACH MAJOR RISE AND DIP. DIP OR RISE POSTS SHALL BE A MINIMUM OF 4" DIAMETER SMALL END, 8' LONG, POSITIONED AT HIGH POINTS OF RIDGES AND LOW POINTS OF GULLIES.
5. EXCEPT FOR FASTENING LINE WIRE, WHICH HAS BEEN STRUNG AROUND THE OUTSIDES OF WOOD POSTS IN CORNERS AND CURVES. FENCE STAPLES SHOULD NOT BE DRIVEN VERTICALLY INTO WOOD POSTS. ROTATING STAPLES SLIGHTLY AWAY FROM SLASH CUT POINTS WILL PROVIDE IMPROVEMENT IN RESISTANCE TO PULLOUT.
6. GROUND RODS OF GALVANIZED STEEL (⅝"x8'), SHALL BE PLACED EVERY 150' IN DRY SOILS, OR EVERY 300' IN MOIST SOILS. SPECIFIC ROD POSITIONING TO BE DETERMINED BY THE ENGINEER. FENCE UNDER POWER LINES SHALL BE GROUNDED AT 3 POINTS, ONE DIRECTLY UNDER POWER LINE AND ONE EACH SIDE 25' TO 50' AWAY.
7. IT IS RECOMMENDED FOR TYING OFF WIRES ON END POSTS TO USE TWO (2) NICOPRESS SLEEVES CAT. NO. FW-2-3, MANUFACTURED BY THE NATIONAL TELEPHONE SUPPLY COMPANY OR ACCEPTABLE EQUAL.
8. IT IS RECOMMENDED FOR SPLICING WIRES TO USE THREE (3) NICROPRESS SLEEVES OR 1 RELIABLE WIRELINK, NUMBER 5057V, MANUFACTURED BY RELIABLE ELECTRIC COMPANY OR ACCEPTABLE EQUAL.
9. PROPER TENSION ON THE BRACE WIRE IN THE END ASSEMBLY IS ACCOMPLISHED BY TWISTING THE BRACE WIRE A MINIMUM OF 6 TURNS, TO A MAXIMUM OF 8 TURNS. THE TWITCH STICK SHOULD BE SECURELY FASTENED TO THE TOP HORIZONTAL BRACE POST.
10. LINE WIRES SHOULD BE STAPLED TO THE LINE POST ONLY AFTER TAKING UP PRELIMINARY TENSION (ABOUT 150 LBS), ON EACH WIRE. STAPLES SHALL NOT BIND WIRE. AFTER STAPLING IS COMPLETED. TENSION EACH WIRE AN ADDITIONAL 100 LBS, FOR A TOTAL OF 250 LBS. INSTALL DROPPERS ONLY AFTER FINAL TENSION IS ON EACH WIRE. SEE CONSTRUCTION NOTE "C", ABOUT TENSION INDICATOR SPRING.
11. ADDITIONAL CONSTRUCTION NOTES MAY BE FOUND IN UNITED STATES STEEL CATALOG NO. T111575, "HOW TO BUILD FENCES WITH UNITED STATES STEEL MAX TEN 200 HIGH-TENSILE FENCE WIRE".
12. CONCRETE SHALL BE CLASS A OR AA.

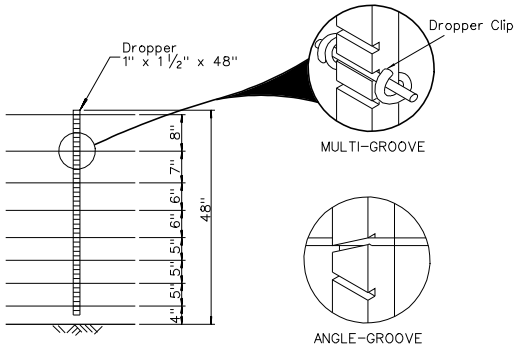

DROPPER DETAIL B

SPECIFICATION NOTES:

A ALL WOOD POSTS AND DROPPERS SHALL BE PRESSURE TREATED IN ACCORDANCE WITH AASHTO DESIGNATION OR EQUIVALENT STATE SPECIFICATION.

B ALL FENCE WIRE, END AND CORNER BRACE ASSEMBLY WIRE SHALL CONSIST OF HIGH TENSILE FENCE WIRE 12½ GAGE, WITH A MINIMUM OF 200,000 LB/IN TENSILE STRENGTH AND CONFORMS WITH THE REQUIREMENTS FOR CLASS 3 ZINC COATING OF ASTM SPECIFICATION A116.

C BRACE PINS, DROPPER CLIPS, TENSION INDICATOR SPRINGS, AND IN-LINE STRAINERS SHALL CONFORM WITH THE REQUIREMENTS FOR CLASS 3 ZINC COATING OF ASTM SPECIFICATION A116.

D STAPLES ARE 1¾", 9 GAGE WITH SLASH CUT POINTS AND SHALL CONFORM WITH THE REQUIREMENTS FOR CLASS 3 ZINC COATING OF ASTM SPECIFICATION A116.

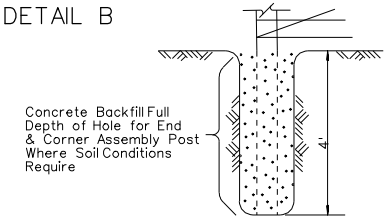

DETAIL A

POST WITH CONCRETE FILL

NEVADA DEPARTMENT OF TRANSPORTATION

HIGH-TENSILE
8-WIRE RANGE FENCE

Signed Original On File	R-6.1.4	(616,724)
CHIEF ROAD DESIGN ENGR.	ADOPTED 11/82	REVISION 2/98

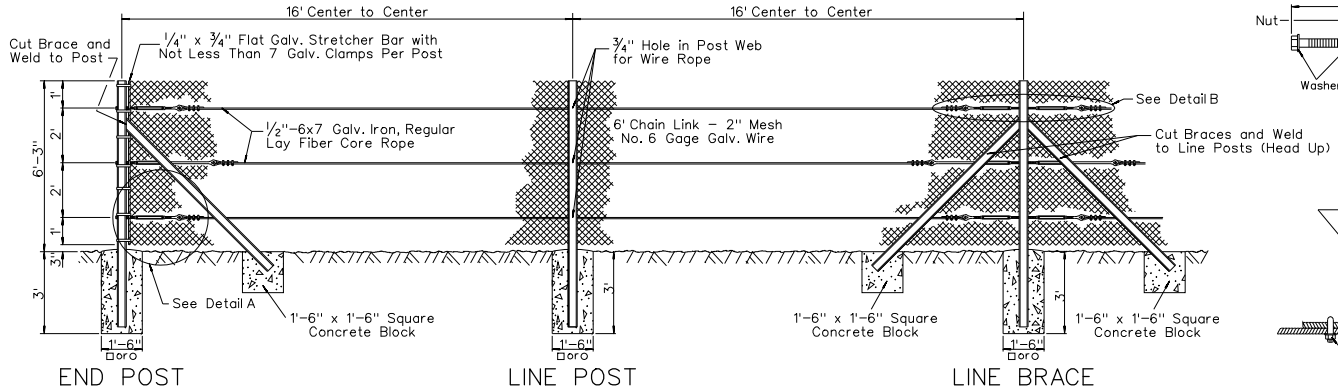

BENCH FENCE (630)

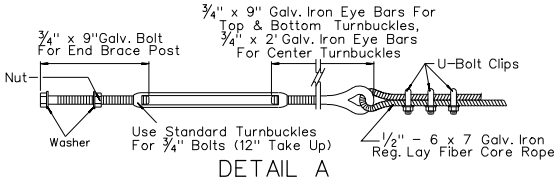

DETAIL A

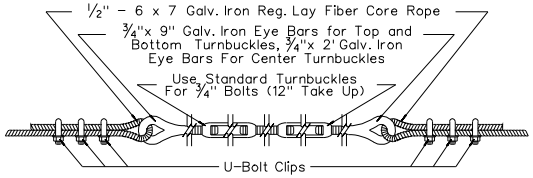

DETAIL B

BENCH FENCE NOTES:

1. ALL POSTS AND BRACES SHALL BE 50 POUND CRANE RAIL OR 4"x 4"x 13 POUND WIDE FLANGE, 9' LONG.
2. INSTALL LINE BRACES AT INTERVALS NOT EXCEEDING 275'.
3. ALL POSTS SHALL BE AT 16' CENTERS.
4. POSTS AND BRACES TO BE SET IN CONCRETE AS SHOWN, EXCEPT IN ROCK THEY MAY BE GROUTED IN DRILL HOLE.
5. 3 GALVANIZED CROSBY CLIPS OR EQUAL AND 1 GALVANIZED WIRE ROPE THIMBLE SHALL BE USED TO ATTACH WIRE ROPE TO EYE BARS.
6. CUT GROOVE IN FLANGE OF BRACES FOR WIRE ROPE AND EYE BAR.
7. SECURE MESH TO LINE POSTS WITH 7 WIRE TIES PER POST, AND TO EACH WIRE ROPE WITH 1 WIRE TIE PER 3 LINEAR FEET.
8. CONCRETE SHALL BE CLASS A OR AA.

NOTE:

Pipe Shall be Fastened to the Wingwall With 1/2" x 1' Galv. Rod.

Use Galv. Nuts and Washers Both Sides of Pipe.

Method of Attaching Fence Wire to Pipe Shall Be Approved By the Engineer.

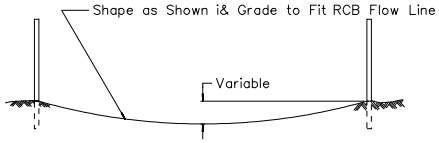

SECTION A-A

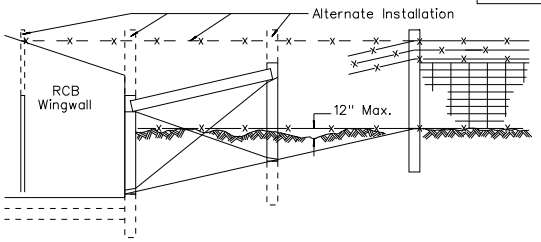

SECTION B-B

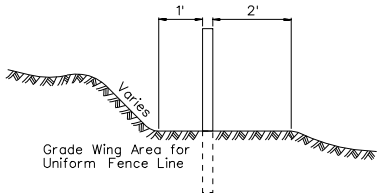

SECTION C-C

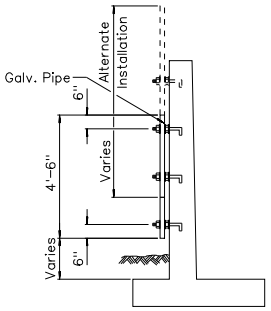

DETAIL C

METHOD OF ATTACHING FENCE TO RCB WINGWALL (OPTIONAL)

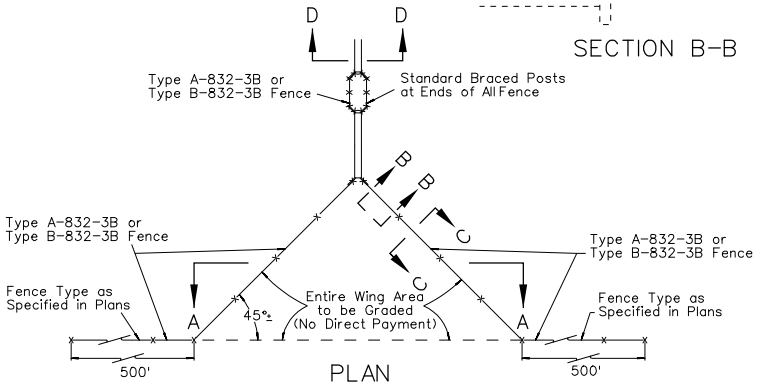

PLAN

CATTLE PASS FENCING (616)

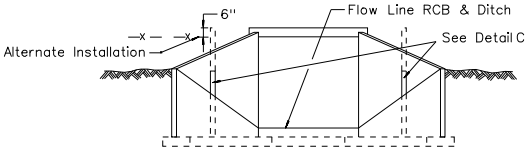

SECTION D-D

NOTE:

Fence Attachment and/or Alternate Installation to be Placed at the Direction of the Engineer, 1' Minimum From Outer End of Wingwall.

NEVADA DEPARTMENT OF TRANSPORTATION

BENCH FENCE AND CATTLE PASS FENCING

Signed Original On File	R-6.2.1	(616-630,724)	
CHIEF ROAD DESIGN ENGR.	ADOPTED 8/69	REVISION 2-11/82	

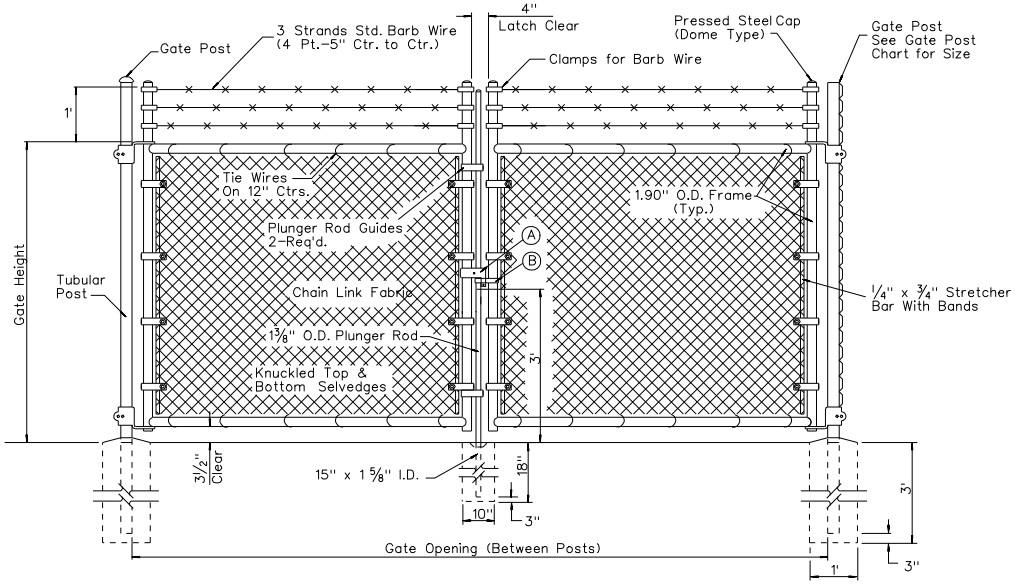

DOUBLE SWING GATE

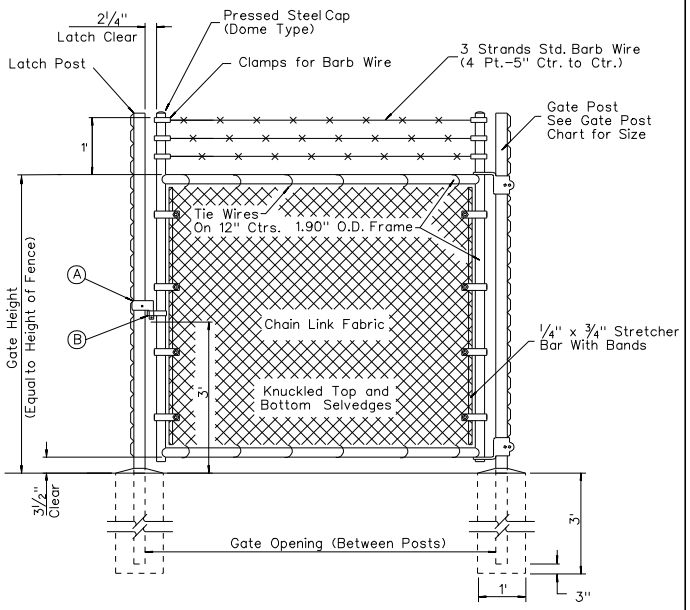

SINGLE SWING GATE

NOTE: 3/8" Adjustable Truss Rods Shall Be Installed on All Gates Over 6' in Width. See Detail B, Sheet R-6.1.3, For Truss Tightener Detail.

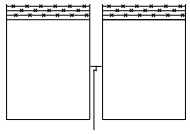

FRAME CONSTRUCTION GATES THRU 12' OPENING

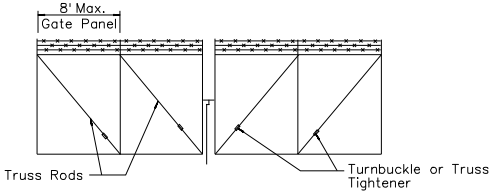

FRAME CONSTRUCTION GATES OVER 12' to 32' OPENING

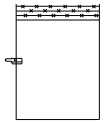

FRAME CONSTRUCTION GATES THRU 6' OPENING

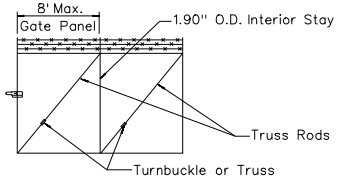

FRAME CONSTRUCTION GATES THRU 6' to 18' OPENING

GATE POST

GATE OPENING IN FEET		ROUND GATE POSTS O.D. DIA. (INCHES)	MIN. WEIGHT POUNDS/LIN. FT.	
SINGLE GATE	DOUBLE GATE		CLASS 1	CLASS 2
Up to 6	Up to 12	2.875	5.79	4.64
7 thru 13	13 thru 26	4.000	9.11	6.56
14 thru 18	27 thru 36	6.625	18.97	—

NOTES:

1. DIAMETERS AND WEIGHTS LISTED ABOVE ARE MINIMUMS. LARGER SIZES MAY BE USED ON APPROVAL OF ENGINEER.
2. 3 1/2" x 3 1/2" TYPE II POST (4.65 LBS/FT) CAN BE USED IN PLACE OF 2.875" O.D. ROUND GATE POST.
3. CONCRETE SHALL BE CLASS A OR AA.

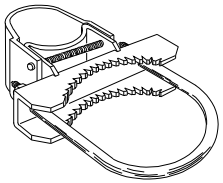

HINGE FOR TUBULAR POSTS

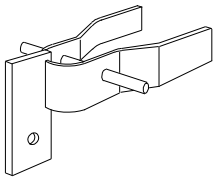

Ⓐ LOCK KEEPER

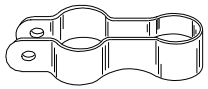

Ⓑ LOCK KEEPER GUIDE

NEVADA DEPARTMENT OF TRANSPORTATION

FENCE DETAILS
SWING GATES
FOR UP TO 72" HEIGHT
CHAIN LINK 3B FENCE

Signed Original On File	R-6.3.2	(616)
CHIEF ROAD DESIGN ENGR.	ADOPTED 3/79	REVISION 10/97

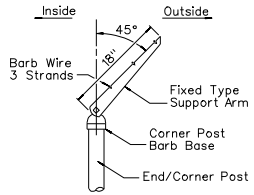

CORNER POST SUPPORT ARM

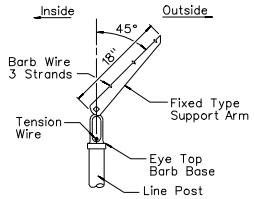

LINE POST SUPPORT ARM

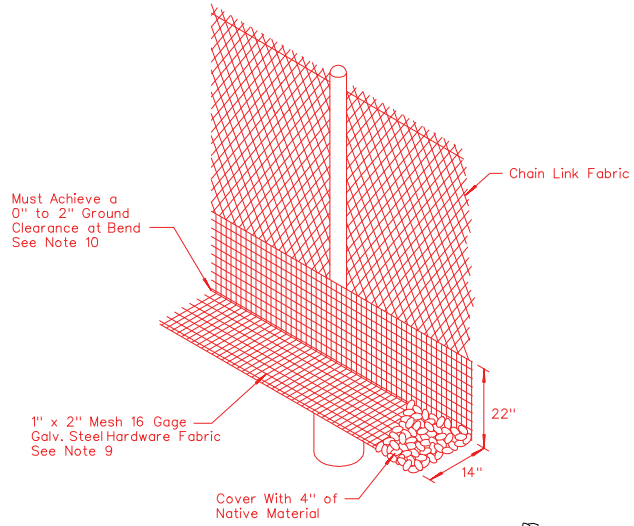

TORTOISE FENCE

NOTES:

1. CHAIN-LINK FENCING SHALL CONSIST OF GALVANIZED CHAIN-LINK FABRIC ON STEEL POSTS (TUBULAR OR C-SECTION).
2. ALL POSTS SHALL BE SET IN CLASS A OR AA CONCRETE.
3. ALL POSTS TOPS SHALL BE FITTED WITH SUITABLE FINIALS.
4. BRACES SHALL BE SPACED APPROXIMATELY 12" BELOW TOP OF TERMINAL POSTS AND SHALL EXTEND FROM END, GATE OR CORNER POSTS TO FIRST ADJACENT LINE POST.
5. ALL FITTINGS SHALL BE HOT-DIPPED GALVANIZED MALLEABLE, CAST IRON, OR PRESSED STEEL.
6. FABRIC SHALL BE FASTENED TO LINE POSTS WITH FABRIC BANDS SPACED APPROXIMATELY 14" APART, AND TO TOP TENSION WIRE AND BOTTOM TENSION WIRE WITH HOG RINGS OR TIE WIRES SPACED APPROXIMATELY 24" APART.
7. FOR ALTERNATE POST AND BRACE RAIL DETAILS SEE SHEETS R-6.3.1 THRU R-6.3.3.
8. CLEARANCE BETWEEN BOTTOM OF GATE AND ORIGINAL GROUND SHALL BE 1" MAXIMUM ON TORTOISE FENCES ONLY.
9. HARDWARE CLOTH TO BE ATTACHED TO CHAIN LINK FENCE FABRIC WITH HOG RINGS AT 12" MAXIMUM SPACING TO BE INSTALLED OUTSIDE OF PIT. DITCH SHALL BE BACKFILLED WITH EXCAVATED MATERIAL AND COMPACTED AS DIRECTED BY THE ENGINEER.
10. ENSURE THAT THE BENT PORTION OF THE FENCE IS LYING ON THE GROUND AND POINTED IN THE DIRECTION OF THE TORTOISE HABITAT.

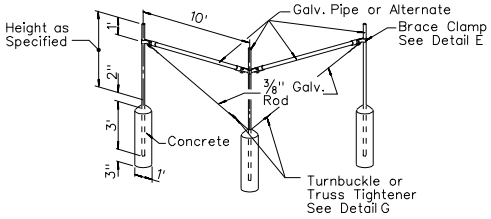

CORNER BRACE FOR CHAIN LINK FENCE

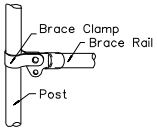

DETAIL E

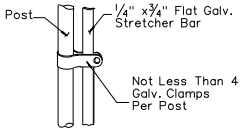

DETAIL F

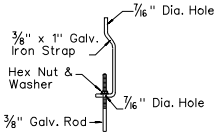

TRUSS TIGHTENER

DETAIL G

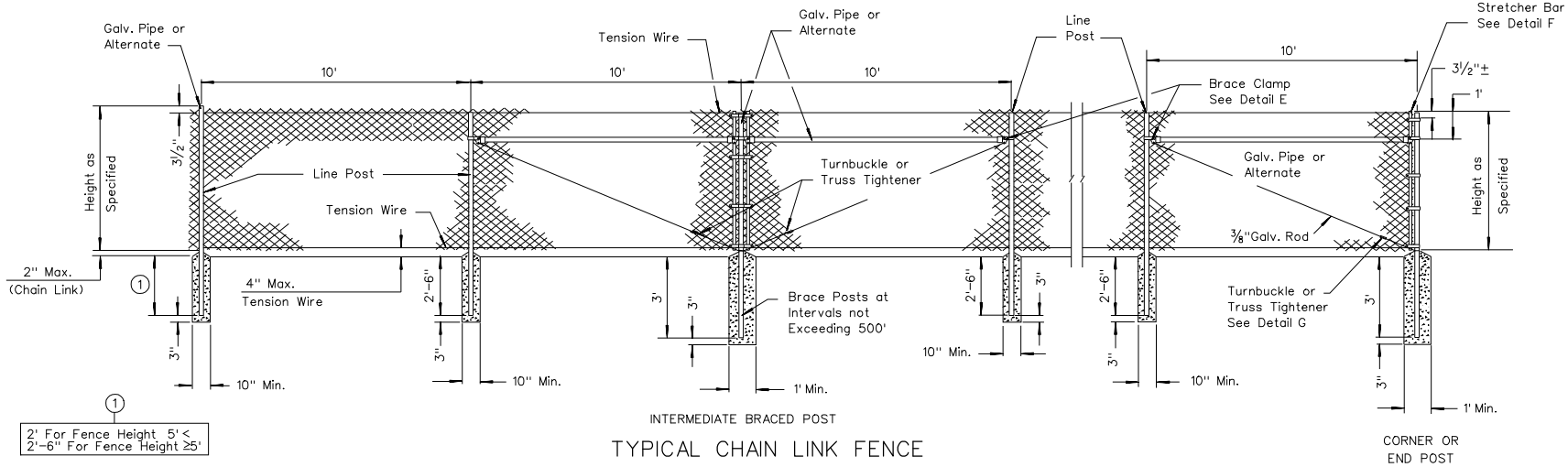

TYPICAL CHAIN LINK FENCE

SIZE OF POSTS															
	CORNER, END, PULL AND BRACE POSTS					LINE POSTS					BRACE RAIL				
FENCE HEIGHT	ROUND PIPE O.D.	MIN. WT. (LBS/L.F.) CLASS 1	MIN. WT. (LBS/L.F.) CLASS 2	TYPE II	MIN. WT. (LBS/L.F.)	ROUND PIPE O.D.	MIN. WT. (LBS/L.F.) CLASS 1	MIN. WT. (LBS/L.F.) CLASS 2	C-SECTION DIMENSIONS	MIN. WT. (LBS/L.F.)	ROUND PIPE O.D.	MIN. WT. (LBS/L.F.) CLASS 1	MIN. WT. (LBS/L.F.) CLASS 2	C-SECTION DIMENSIONS	MIN. WT. (LBS/L.F.)
3'to 6'	2.375"	3.65	2.64	3.5"x3.5"	4.85	1.900"	2.72	1.94	1.875"x1.625"	1.60	1.660"	2.27	1.45	1.625"x1.250"	1.35

NEVADA DEPARTMENT OF TRANSPORTATION

FENCE DETAILS
CHAIN LINK FENCE
AND TORTOISE FENCE

Signed Original On File | R-6.3.2.1 (616)
CHIEF ROAD DESIGN ENGR. | ADOPTED 10/94 | REVISION 6/09

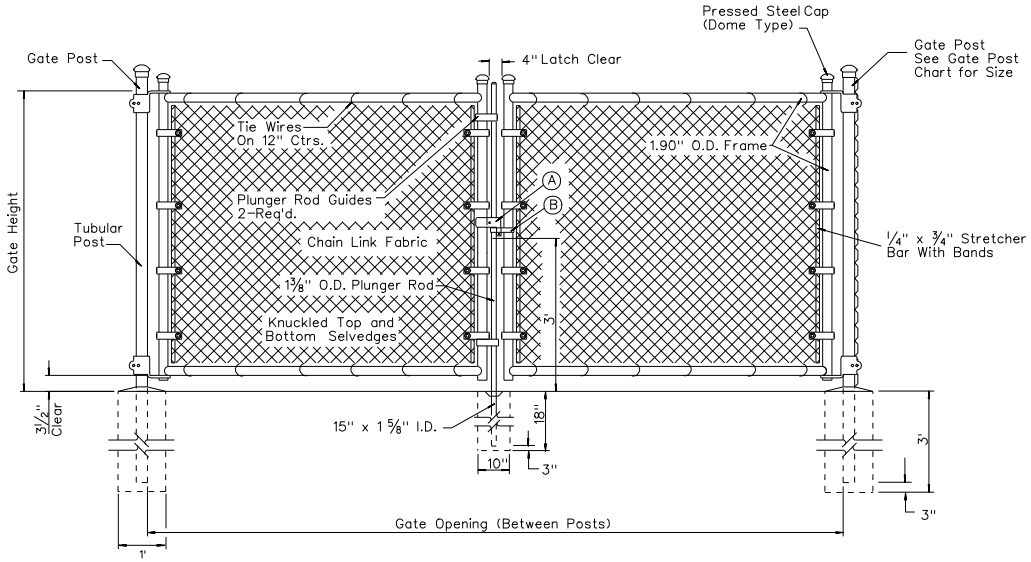

DOUBLE SWING GATE

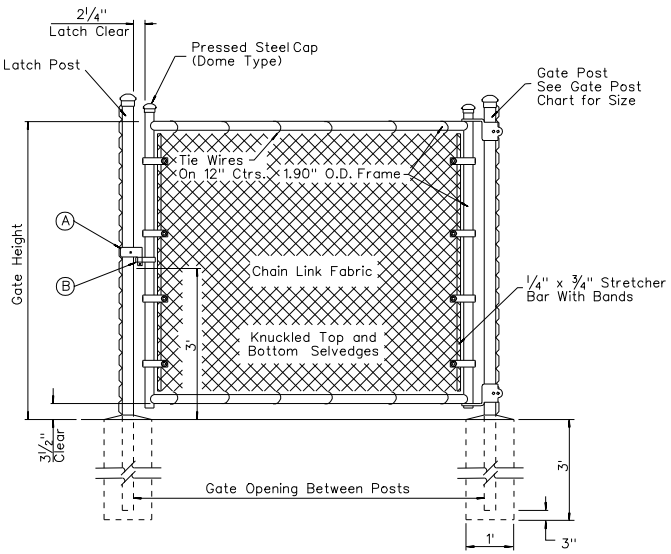

SINGLE SWING GATE

NOTE: ⅜" Adjustable Truss Rods Shall Be Installed on All Gates Over 6' in Width. See Detail B, Sheet R-6.1.3, For Truss Tightener Detail.

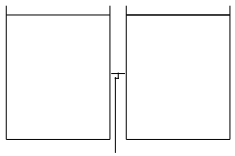

FRAME CONSTRUCTION GATES THRU 12' OPENING

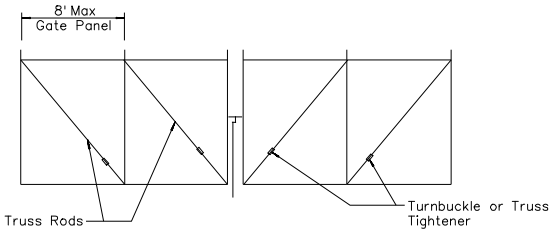

FRAME CONSTRUCTION GATES OVER 12' to 32' OPENING

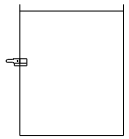

FRAME CONSTRUCTION GATES THRU 6' OPENING

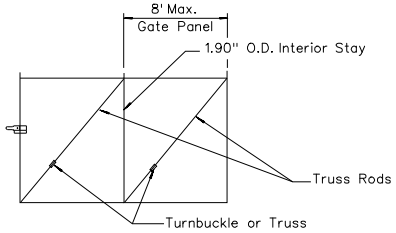

FRAME CONSTRUCTION GATES OVER 6' to 18' OPENING

GATE POST

GATE OPENING IN FEET		ROUND GATE POSTS O.D. DIA. (INCHES)	MIN. WEIGHT POUNDS/LIN. FT.	
SINGLE GATE	DOUBLE GATE		CLASS 1	CLASS 2
Up to 6	Up to 12	2.875	5.79	4.64
7 thru 13	13 thru 26	4.000	9.11	6.56
14 thru 18	27 thru 36	6.625	18.97	—

NOTES:

1. DIAMETERS AND MASS LISTED ABOVE ARE MINIMUMS. LARGER SIZES MAY BE USED ON APPROVAL OF ENGINEER.
2. 3½" x 3½" TYPE II POST (4.65 LBS/FT) CAN BE USED IN PLACE OF 2.875" O.D. ROUND GATE POST.
3. CONCRETE SHALL BE CLASS A OR AA.

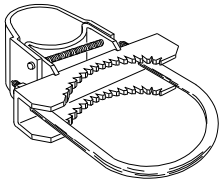

HINGE FOR TUBULAR POSTS

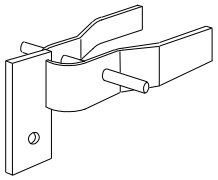

Ⓐ LOCK KEEPER

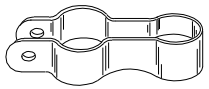

Ⓑ LOCK KEEPER GUIDE

NEVADA DEPARTMENT OF TRANSPORTATION

FENCE DETAILS
SWING GATE FOR UP TO
72" CHAIN LINK FENCE

Signed Original On File	R-6.3.3	(616)
CHIEF ROAD DESIGN ENGR.	ADOPTED 3/79	REVISION 1-11/82

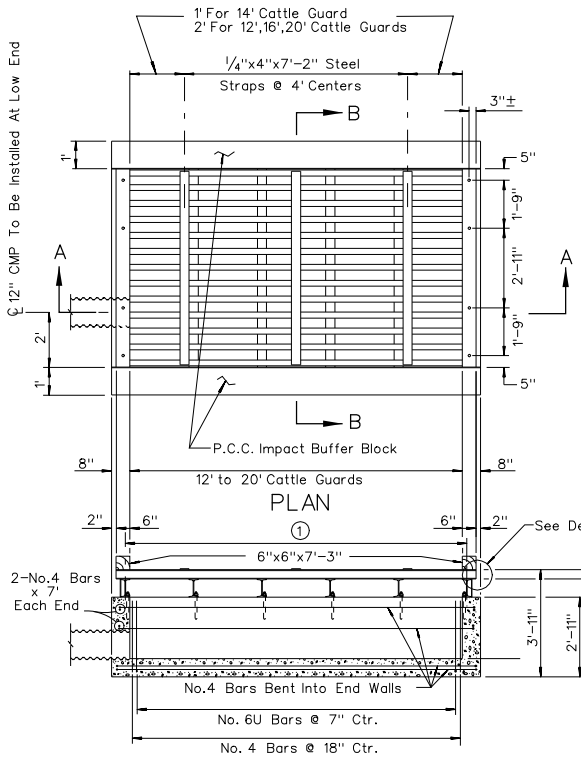

SECTION A-A

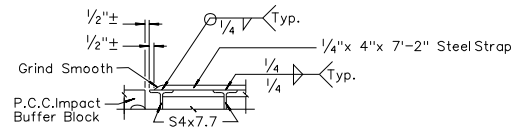

DETAIL B

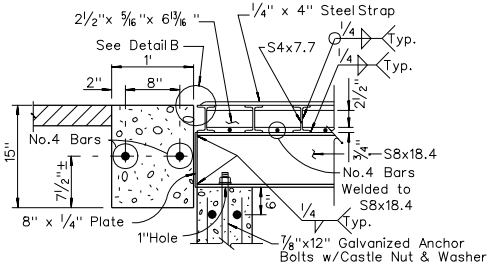

TYPICAL CONNECTION

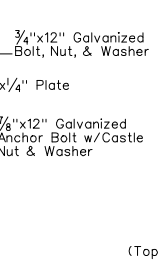

SECTION B-B

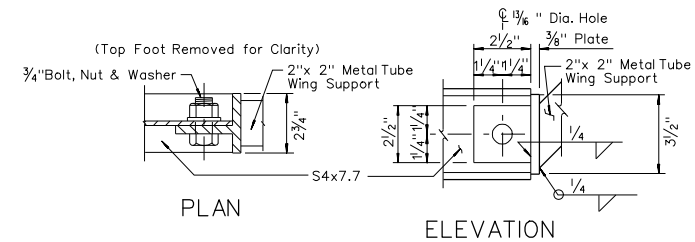

*DETAIL A

* For Use With Optional Metal Wings Only. This Connection Shall Be Made To Second S4x7.7 Beam At 8.33" From Impact Buffer Blocks.

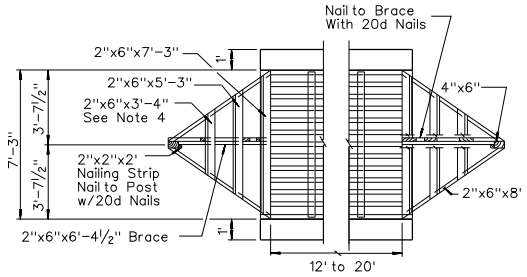

PLAN OF WINGS

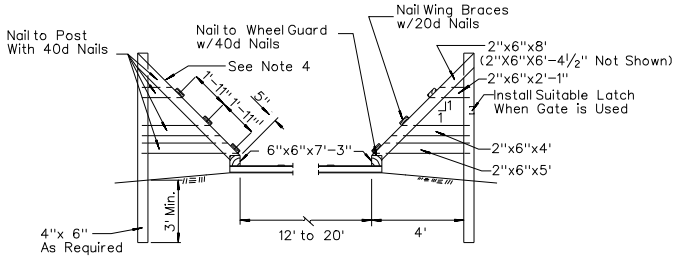

ELEVATION OF WINGS

1

6-S8x18.4@2'-6"=12'-6" for 12'Cattle Guard
7-S8x18.4@2'-5"=14'-6" for 14'Cattle Guard
8-S8x18.4@2'-4 1/4"=16'-6" for 16'Cattle Guard
9-S8x18.4@2'-6 3/4"=20'-6" for 20'Cattle Guard

SHEET 1 OF 2

NEVADA DEPARTMENT OF TRANSPORTATION

STEEL CATTLE GUARD
12' TO 20' ROADBED

Signed Original On File	R-7.1.1	(617)
CHIEF ROAD DESIGN ENGR.	ADOPTED 8/69	REVISION 5/09

R-76

NOTES:

1. ALL CONCRETE TO BE CLASS A OR AA.
2. STANDARD METAL OR TIMBER GATES SHALL BE CONSTRUCTED WHEN SHOWN ON PLANS OR ORDERED BY THE ENGINEER.
3. ALL CONNECTIONS TO BE WELDED.
4. ALL TIMBER SHALL BE PAINTED WHITE PER STANDARD SPECIFICATIONS.
5. METAL WINGS ARE OPTIONAL, SEE DETAIL A. FOR ADDITIONAL DETAILS AND QUANTITIES SEE SHEETS R-7.1.3 & R-7.1.3.1.
6. ALL WINGS SHALL BE PAINTED WHITE PER STANDARD SPECIFICATIONS.
7. CATTLE GUARD WIDTH SHALL INCLUDE A 2' SHY DISTANCE FROM THE NORMAL EDGE OF PAVEMENT, EACH SIDE (PER AASHTO).

ALL ROADBED WIDTH				
ITEM	NO. REQ'D	SIZE	LENGTH	WT. LBS.
CORR. METAL PIPE	1	12"	** 2'	20

** PIPE LENGTH & DRAINAGE DITCH SHALL BE AS INDICATED ON THE PLANS.
SACKED ROCK AT END OF PIPE WILL NOT BE PERMITTED

CONCRETE	
12' ROADBED	6.25 CU. YD.
14' ROADBED	7.03 CU. YD.
16' ROADBED	7.79 CU. YD.
20' ROADBED	9.34 CU. YD.

* NO. 4 BARS WELDED TO 8" IBEAMS

BILL OF MATERIALS

TIMBER				
ITEM	NO. REQ'D	SIZE	LENGTH	FT.BM
WHEEL GUARDS	2	6"x6"	7'-3"	43.5
WING SLOPE	4	2"x6"	8'	32.0
WING SLOPE	2	2"x6"	6'-4½"	12.8
WING BRACES	2	2"x6"	3'-4"	6.7
WING BRACES	4	2"x6"	5'-3"	21.0
WING BRACES	2	2"x6"	7'-3"	14.5
WING BRACES	2	2"x6"	2'-1"	4.2
WING BRACES	2	2"x6"	4'	8.0
WING BRACES	2	2"x6"	5'	10.0
WING POST	2	4"x6"	AS REQUIRED	
NAILING STRIP	2	2"x2"	2'	1.3

GALVANIZED HARDWARE				
ITEM	NO. REQ'D	SIZE	LENGTH	WT. LBS.
BOLTS	8	¾"	12"	15
WASHERS	8	¾"		1
WASHERS (LOCK)	4	¾"		½
NAILS	50	40d		3
NAILS	72	20d		2¼
BOLTS	4	¾"	1½"	1
TOTAL				22¾

REINFORCING

12' ROADBED				
ITEM	NO. REQ'D	SIZE	LENGTH	WT. LBS.
HORIZONTAL BARS	* 12	NO. 4	12'-6"	100
HORIZONTAL BARS	12	NO. 4	7'	56
HORIZONTAL BARS	18	NO. 4	16'-9"	201
VERTICAL BARS	20	NO. 4	2'-9"	37
U-BARS	22	NO. 6	12'-1"	400
HORIZONTAL BARS	4	NO. 4	13'-2"	35
TOTAL				900

14' ROADBED				
ITEM	NO. REQ'D	SIZE	LENGTH	WT. LBS.
HORIZONTAL BARS	* 12	NO. 4	14'-6"	116
HORIZONTAL BARS	13	NO. 4	7'	61
HORIZONTAL BARS	18	NO. 4	18'-9"	225
VERTICAL BARS	22	NO. 4	2'-9"	40
U-BARS	24	NO. 6	12'-1"	436
HORIZONTAL BARS	4	NO. 4	15'-2"	41
TOTAL				1009

16' ROADBED				
ITEM	NO. REQ'D	SIZE	LENGTH	WT. LBS.
HORIZONTAL BARS	* 12	NO. 4	16'-6"	132
HORIZONTAL BARS	15	NO. 4	7'	70
HORIZONTAL BARS	18	NO. 4	20'-9"	249
VERTICAL BARS	26	NO. 4	2'-9"	48
U-BARS	29	NO. 6	12'-1"	527
HORIZONTAL BARS	4	NO. 4	17'-2"	46
TOTAL				1125

20' ROADBED				
ITEM	NO. REQ'D	SIZE	LENGTH	WT. LBS.
HORIZONTAL BARS	* 12	NO. 4	20'-6"	164
HORIZONTAL BARS	17	NO. 4	7'	79
HORIZONTAL BARS	18	NO. 4	24'-9"	297
VERTICAL BARS	30	NO. 4	2'-9"	55
U-BARS	36	NO. 6	12'-1"	654
HORIZONTAL BARS	4	NO. 4	21'-2"	57
TOTAL				1359

STRUCTURAL STEEL

12' ROADBED				
ITEM	NO. REQ'D	SIZE	LENGTH	WT. LBS.
IBEAMS	13	S4x7.7	13'	1301
IBEAMS	6	S8x18.4	7' 3"	800
SPACERS	72	2½"x5/16"	6 13/16 "	109
ANCHOR BOLTS	12	⅞"	1'	12
END PLATES	2	8"x1/2"	13'	177
STEEL STRAPS	3	4"x1/4"	7' -2"	74
TOTAL				2473

14' ROADBED				
ITEM	NO. REQ'D	SIZE	LENGTH	WT. LBS.
IBEAMS	13	S4x7.7	15'	1502
IBEAMS	7	S8x18.4	7'-3"	934
SPACERS	84	2½"x5/16"	6 13/16 "	127
ANCHOR BOLTS	14	⅞"	1'	14
END PLATES	2	8"x1/4"	15'	204
STEEL STRAPS	4	4"x1/4"	7'-2"	98
TOTAL				2879

16' ROADBED				
ITEM	NO. REQ'D	SIZE	LENGTH	WT. LBS.
IBEAMS	13	S4x7.7	17'	1702
IBEAMS	8	S8x18.4	7'-3"	1067
SPACERS	84	2½"x5/16"	6 13/16 "	127
ANCHOR BOLTS	14	⅞"	1'	14
END PLATES	2	8"x1/4"	17'	231
STEEL STRAPS	4	4"x1/4"	7'-2"	98
TOTAL				3239

20' ROADBED				
ITEM	NO. REQ'D	SIZE	LENGTH	WT. LBS.
IBEAMS	13	S4x7.7	21'	2102
IBEAMS	9	S8x18.4	7'-3"	1201
SPACERS	108	2½"x5/16"	6 13/16 "	163
ANCHOR BOLTS	18	⅞"	1'	18
END PLATES	2	8"x1/4"	21'	286
STEEL STRAPS	5	4"x1/4"	7'-2"	122
TOTAL				3892

SHEET 2 OF 2

NEVADA DEPARTMENT OF TRANSPORTATION

STEEL CATTLE GUARD
12' TO 20' ROADBED

Signed Original On File
CHIEF ROAD DESIGN ENGR.

R-7.1.1.1 (617)
ADOPTED 8/69 REVISION 5/09

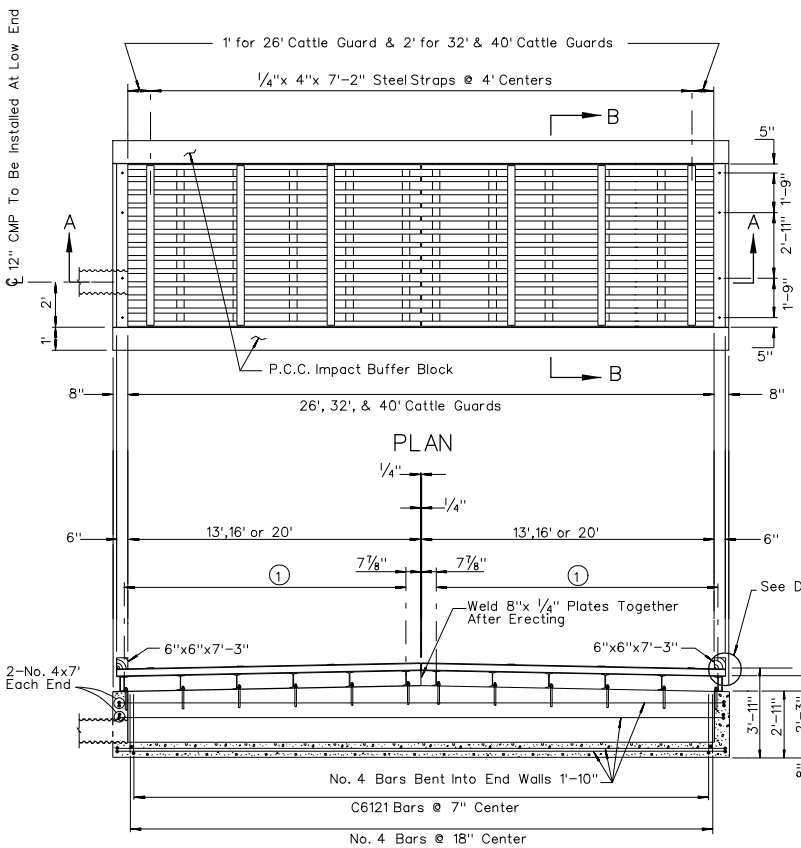

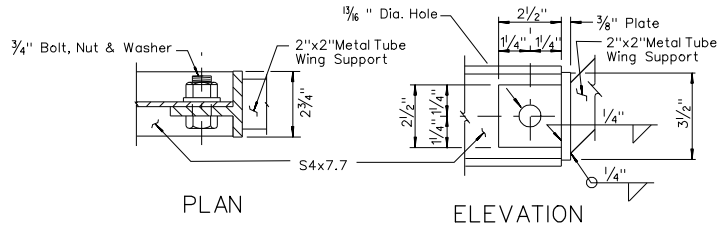

DETAIL A

For Use With Optional Metal Wings Only. This Connection Shall Be Made To Second S4x7.7 Beam At 8.33" From Impact Buffer Blocks, Top Foot Removed for Clarity.

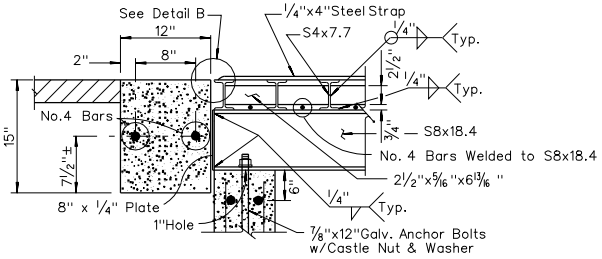

TYPICAL CONNECTION

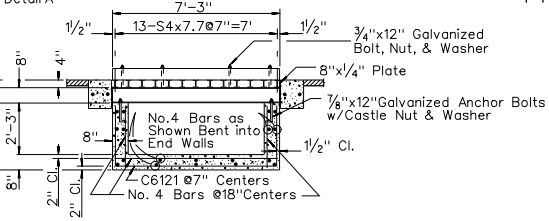

1

6-S8x18.4@2'-6"=12'-6" for 26' Cattle Guard
7-S8x18.4@2'-7"=15'-6" for 32' Cattle Guard
9-S8x18.4@2'-5 1/4"=19'-6" for 40' Cattle Guard

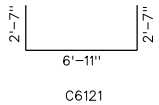

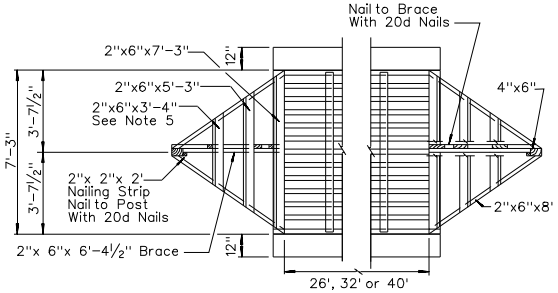

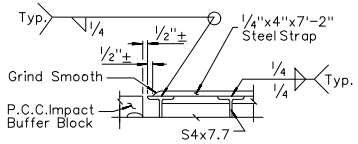

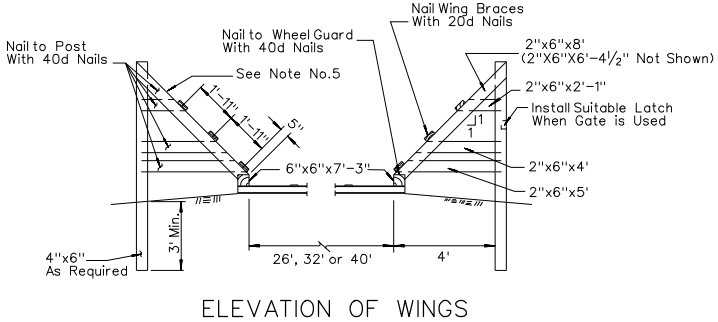

SHEET 1 OF 2

NEVADA DEPARTMENT OF TRANSPORTATION

STEEL CATTLE GUARD
26', 32', & 40' ROADBEDS

Signed Original On File	R-7.1.2	(617)
CHIEF ROAD DESIGN ENGR.	ADOPTED 8/69	REVISION 5/09

NOTES:

1. ALL CONCRETE TO BE CLASS A OR AA.
2. STANDARD METAL OR TIMBER GATES SHALL BE CONSTRUCTED WHEN SHOWN ON PLANS OR ORDERED BY THE ENGINEER.
3. ALL CONNECTIONS TO BE WELDED.
4. ALL TIMBER SHALL BE PAINTED WHITE PER STANDARD SPECIFICATIONS.
5. METAL WINGS ARE OPTIONAL, SEE DETAIL A. FOR ADDITIONAL DETAILS AND QUANTITIES SEE SHEETS R-7.1.3 & R-7.1.3.1.
6. ALL WINGS SHALL BE PAINTED WHITE PER STANDARD SPECIFICATIONS.
7. CATTLE GUARD WIDTH SHALL INCLUDE A 2' SHY DISTANCE FROM THE NORMAL E.O.P., EACH SIDE (PER AASHTO).

ALL ROADBED WIDTH				
ITEM	NO.REQ'D	SIZE	LENGTH	WT. LBS.
CORR. METAL PIPE	1	12"	** 2'	20

** PIPE LENGTH & DRAINAGE DITCH SHALL BE AS INDICATED ON THE PLANS. SACKED ROCK AT END OF PIPE WILL NOT BE PERMITTED.

CONCRETE	
26' ROADBED	9.36 CU. YD.
32' ROADBED	11.23 CU. YD.
40' ROADBED	13.74 CU. YD.

* No. 4 BARS WELDED TO 8" IBEAMS

STRUCTURAL STEEL

26' ROADBED				
ITEM	NO. REQ'D	SIZE	LENGTH	WT. LBS.
IBEAMS	26	S4x7.7	13'-5¾"	2,699
IBEAMS	12	S8x18.4	7'-3"	1,331
SPACERS	144	2½"x5/16"	6 13/16 "	217
ANCHOR BOLTS	24	⅞"Ø	1'	23
END PLATES	4	8"x1/4"	13'-6"	320
STEEL STRAPS	7	4"x1/4"	7'-2"	171
TOTAL				4,761
32' ROADBED				
ITEM	NO. REQ'D	SIZE	LENGTH	WT. LBS.
IBEAMS	26	S4x7.7	16'-5¾"	3,299
IBEAMS	14	S8x18.4	7'-3"	1,553
SPACERS	168	2½"x5/16"	6 13/16 "	254
ANCHOR BOLTS	28	⅞"Ø	1'	27
END PLATES	4	8"x1/4"	16'-6"	392
STEEL STRAPS	8	4"x1/4"	7'-2"	195
TOTAL				5,720
40' ROADBED				
ITEM	NO. REQ'D	SIZE	LENGTH	WT. LBS.
IBEAMS	26	S4x7.7	20'-5¾"	4,100
IBEAMS	18	S8x18.4	7'-3"	1,997
SPACERS	216	2 ½"x5/16"	6 13/16 "	326
ANCHOR BOLTS	36	⅞"Ø	1'	35
END PLATES	4	8"x1/4"	20'-6"	487
STEEL STRAPS	10	4"x1/4"	7'-2"	244
TOTAL				7,189

REINFORCING

26' ROADBED				
ITEM	NO. REQ'D	SIZE	LENGTH	WT. LBS.
HORIZONTAL BARS	*24	NO. 4	13'-3"	212
HORIZONTAL BARS	22	NO. 4	7'	103
HORIZONTAL BARS	18	NO. 4	30'-9"	370
VERTICAL BARS	40	NO. 4	2'-9"	74
U-BARS	50	NO. 6	12'-1"	907
HORIZONTAL BARS	4	NO. 4	27'-2"	72
TOTAL				1738
32' ROADBED				
ITEM	NO. REQ'D	SIZE	LENGTH	WT. LBS.
HORIZONTAL BARS	*24	NO. 4	16'-3"	260
HORIZONTAL BARS	26	NO. 4	7'	122
HORIZONTAL BARS	18	NO. 4	36'-9"	442
VERTICAL BARS	48	NO. 4	2'-9"	88
U-BARS	60	NO. 6	12'-1"	1088
HORIZONTAL BARS	4	NO. 4	33'-2"	89
TOTAL				2089
40' ROADBED				
ITEM	NO. REQ'D	SIZE	LENGTH	WT. LBS.
HORIZONTAL BARS	*24	NO. 4	20'-3"	325
HORIZONTAL BARS	31	NO. 4	7'	145
HORIZONTAL BARS	18	NO. 4	44'-9"	538
VERTICAL BARS	58	NO. 4	2'-9"	107
U-BARS	74	NO. 6	12'-1"	1344
HORIZONTAL BARS	4	NO. 4	41'-2"	110
TOTAL				2569

BILL OF MATERIALS

TIMBER				
ITEM	NO. REQ'D	SIZE	LENGTH	FT.BM
WHEEL GUARDS	2	6"x6"	7'-3"	43.5
WING SLOPE	4	2"x6"	8'	32.0
WING SLOPE	2	2"x6"	6'-4½"	12.8
WING BRACES	2	2"x6"	3'-4"	6.7
WING BRACES	4	2"x6"	5'-3"	21.0
WING BRACES	2	2"x6"	7'-3"	14.5
WING BRACES	2	2"x6"	2'-1"	4.2
WING BRACES	2	2"x6"	4'	8.0
WING BRACES	2	2"x6"	5'	10.0
WING POST	2	4"x6"	AS REQUIRED	
NAILING STRIP	2	2"x2"	2'	1.3
GALVANIZED HARDWARE				
ITEM	NO. REQ'D	SIZE	LENGTH	WT. LBS.
BOLTS	8	¾"	12"	15
WASHERS	8	¾"		1
WASHERS (LOCK)	4	¾"		½
NAILS	50	40d		3
NAILS	72	20d		2¼
BOLTS	4	¾"	1½"	1
TOTAL				22¾

SHEET 2 OF 2

NEVADA DEPARTMENT OF TRANSPORTATION

STEEL CATTLE GUARD
26', 32', & 40' ROADBEDS

Signed Original On File
CHIEF ROAD DESIGN ENGR.

R-7.1.2.1 (617)
ADOPTED 8/69 REVISION 5/09

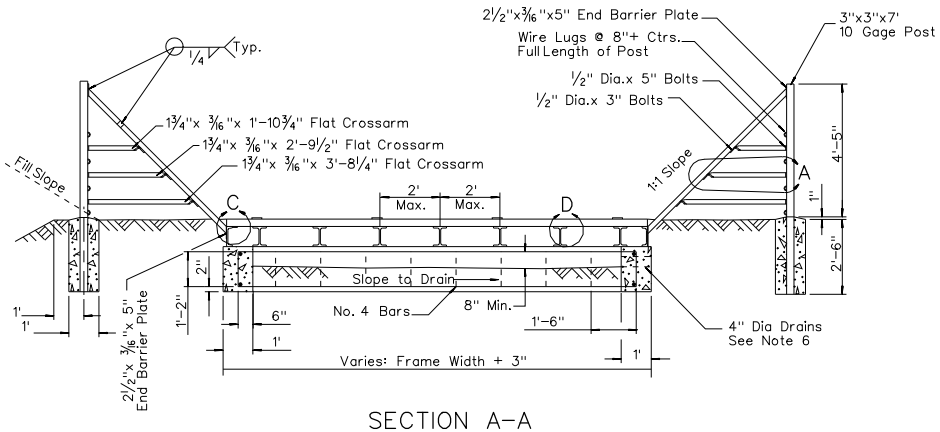

SECTION A-A

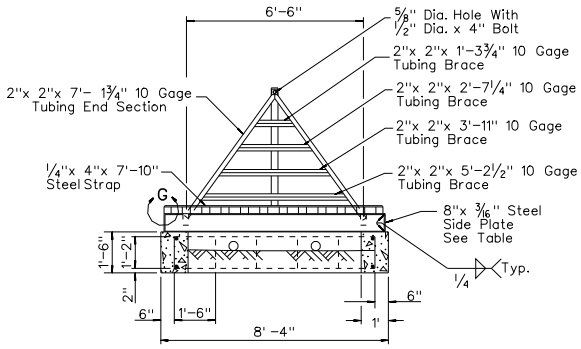

SECTION B-B

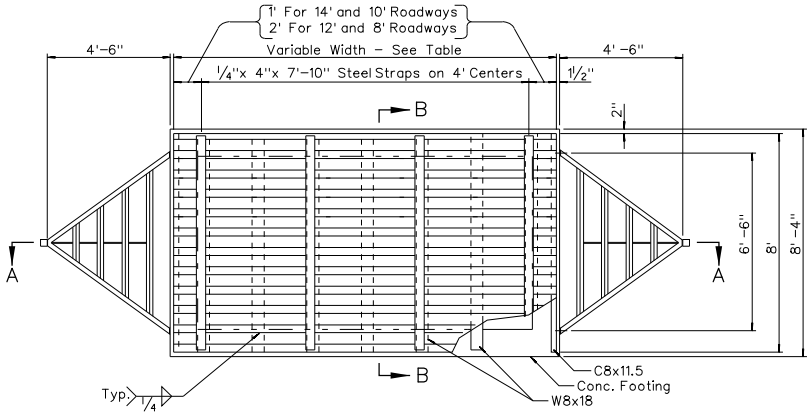

PLAN VIEW

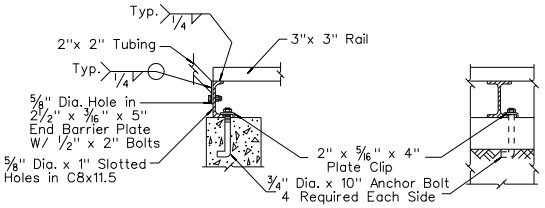

DETAIL C

DETAIL D

THIS DESIGN IS NOT FOR USE ON MAINLINES, RAMPS, OR CROSSROADS

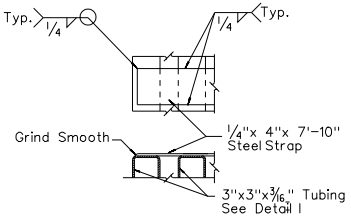

DETAIL G

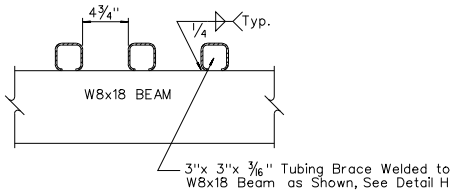

DETAIL I

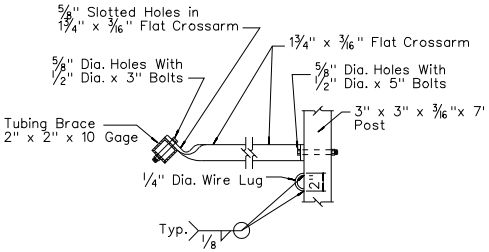

DETAIL A

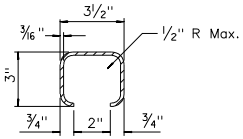

DETAIL H

NOTE: A Welded or Rolled Unit of Equivalent Design Loading Capacity May Be Submitted to the Engineer for Approval in Place of a 3" x 3" 3/16" Tubing.

SHEET 1 OF 2

NEVADA DEPARTMENT OF TRANSPORTATION

STEEL CATTLE GUARD TYPE B

Signed Original On File	R-7.1.3	(617)
CHIEF ROAD DESIGN ENGR.	ADOPTED 3/71	REVISION 5/09

NOTES:

1. ALL CONCRETE SHALL BE CLASS A OR AA.
2. ALTERNATIVE DESIGN MAY BE SUBSTITUTED BY THE CONTRACTOR FOR APPROVAL BY THE ENGINEER.
3. LIVE LOADING: H-20
4. CATTLE GUARD SLOPE IS TO CONFORM TO THE ROADWAY CROSS SLOPE AND GRADE.
5. "FRAME WIDTH" COMBINATIONS MAY BE VARIED TO OBTAIN THE SPECIFIED WIDTH OF CATTLE GUARDS.
6. EXTEND 4" DRAINS TO FACILITATE DRAINAGE OF STRUCTURE.
7. ALL WINGS SHALL BE PAINTED WHITE PER STANDARD SPECIFICATION.

BILL OF MATERIALS

FRAME SIZE		LONGITUDINAL STRINGERS			
LENGTH	WIDTH	NO. REQD	SIZE	SPACING	WT. LBS
8'	14'	6	W8X18	EQUAL	859
8'	12'	5	W8X18	EQUAL	716
8'	10'	4	W8X18	EQUAL	573
8'	8'	3	W8X18	EQUAL	430

MATERIAL LIST FOR WINGS				
ITEM	NO. REQD	SIZE	LENGTH	WT. LBS
FLAT CROSSARMS	2	1-3/4"x3/16"	1'- 10 3/4"	4
FLAT CROSSARMS	2	1-3/4"x3/16"	2'- 9 1/2"	6
FLAT CROSSARMS	2	1-3/4"x3/16"	3'- 8 1/4"	8
BRACES	2	2"x2"x10 GA	1'- 3 3/4"	11
BRACES	2	2"x2"x10 GA	2'- 7 1/4"	23
BRACES	2	2"x2"x10 GA	3'- 11"	38
BRACES	2	2"x2"x10 GA	5'- 2 1/2"	45
END BARRIER	4	2"x2"x10 GA	7'- 1 3/4"	123
END BARRIER PLATE	6	2 1/2"x3/16"	5"	4
UPRIGHT POST	2	3"x3"x3/16"	7'	96

STRUCTURAL STEEL				
ITEM	NO. REQD	SIZE	LENGTH	WT. LBS
RAILS	13	3"x3"x3/16"	14'	1249
SIDE PLATES	2	8"x3/16"	14'	143
RAILS	13	3"x3"x3/16"	12'	1070
SIDE PLATES	2	8"x3/16"	12'	122
RAILS	13	3"x3"x3/16"	10'	892
SIDE PLATES	2	8"x3/16"	10'	102
RAILS	13	3"x3"x3/16"	8'	713
SIDE PLATES	2	8"x3/16"	8'	82

MATERIAL LIST FOR ALL SIZES				
ITEM	NO. REQD	SIZE	LENGTH	WT. LBS
CHANNELS	2	C8x11.5	8'	184
PLATE CLIP	12	2"x3/8"	4 1/2'	9
ANCHOR BOLT CLIP	14	2"x5/16"	4"	10

STRUCTURAL STEEL				
ROAD WIDTH	ITEM	NO. REQD	SIZE	WT. LBS
14'	STEEL STRAP	4	1/4"x4"x7'-10"	107
12'	STEEL STRAP	3	1/4"x4"x7'-10"	80
10'	STEEL STRAP	3	1/4"x4"x7'-10"	80
8'	STEEL STRAP	2	1/4"x4"x7'-10"	53

CONCRETE		REINFORCING STEEL
LENGTH	CUBIC YDS.	WT. LBS
14'	2.29	82
12'	2.06	74
10'	1.84	67
8'	1.62	60

GALVANIZED HARDWARE			
ITEM	NO. REQD	SIZE	LENGTH
BOLT	6	1/2"	3"
BOLT	16	1/2"	2"
BOLT	6	1/2"	5"
WASHER	56	9/16"	-
WASHER	14	13/16"	-
NUT	28	1/2"	-
NUT	14	3/4"	-
ANCHOR BOLT	14	3/4"	-

MATERIAL LISTS ARE FOR INFORMATION ONLY

SHEET 2 OF 2

NEVADA DEPARTMENT OF TRANSPORTATION

STEEL CATTLE GUARD
TYPE B

Signed Original On File | R-7.1.3.1 | (617)

CHIEF ROAD DESIGN ENGR. | ADOPTED 3/71 | REVISION 5/09

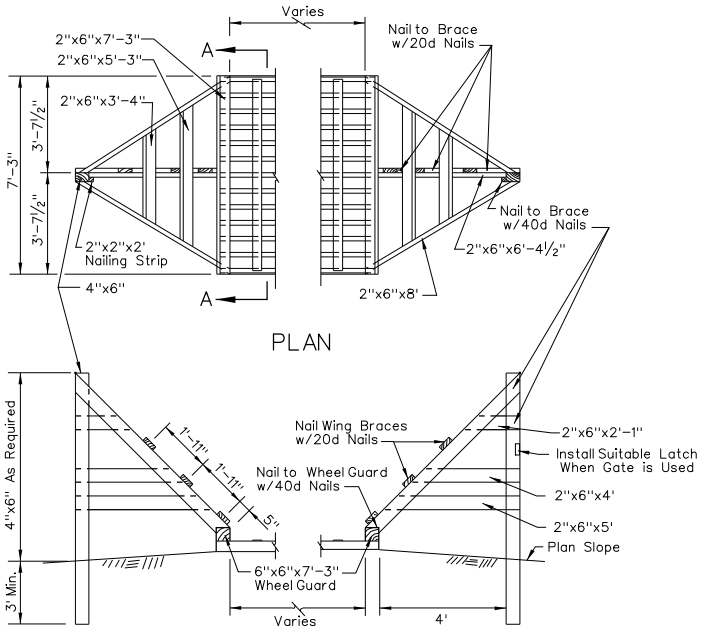

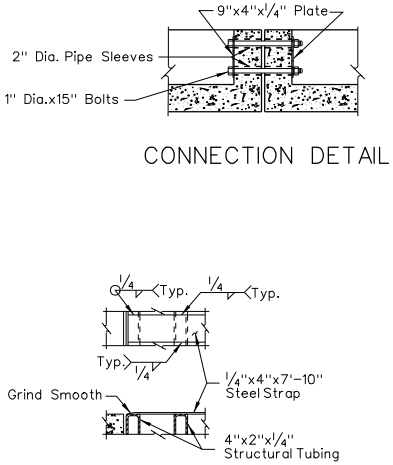

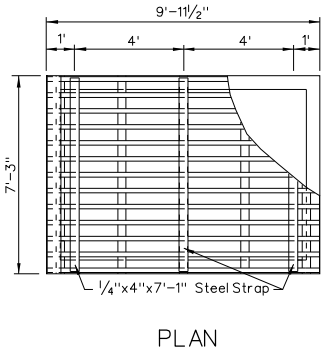

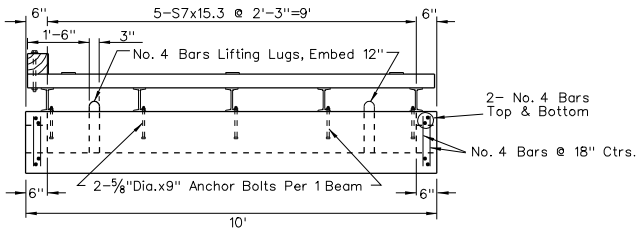

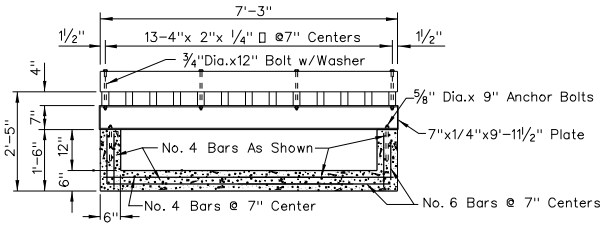

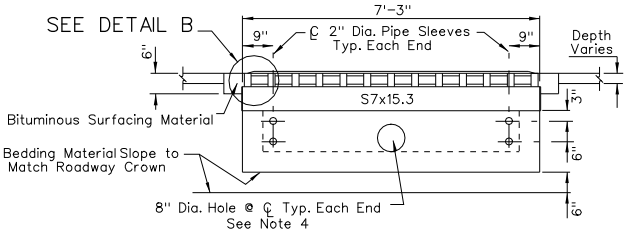

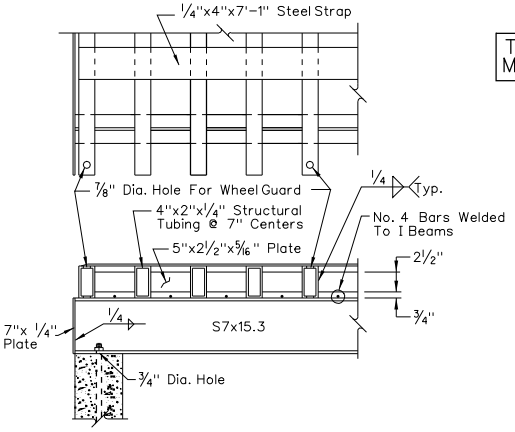

THIS DESIGN IS NOT FOR USE ON MAINLINES, RAMPS, OR CROSSROADS

SHEET 1 OF 2

NEVADA DEPARTMENT OF TRANSPORTATION

STEEL CATTLE GUARD
TYPE C

Signed Original On File	R-7.1.4	(617)
CHIEF ROAD DESIGN ENGR.	ADOPTED 10/70	REVISION 5/09

NOTES:

1. ALL CONCRETE TO BE CLASS DA.
2. ALL CONNECTIONS TO BE WELDED.
3. WHEN GATE IS NOT SPECIFIED:
   INSTALL THE REQUIRED TYPE OF INTERMEDIATE BRACED POST ADJACENT TO THE WING POST.
   FENCE WIRES TO BE TIED TO BRACED POST ONLY.
4. EXTEND DRAIN PIPES TO FACILITATE DRAINAGE OF STRUCTURE.
5. WINGS SHALL BE PAINTED WHITE PER STANDARD SPECIFICATIONS.

STRUCTURAL STEEL
(1-10'-0" COMPONENT)

ITEM	NO. REQUIRED	SIZE	LENGTH	WT.LBS
BEAMS	5	S7x15.3	7' -3"	554.6
STRUCTURAL TUBING	13	4"x2"x1/4"	9' -11 1/2"	1139.3
SPACER PLATES	60	2 1/2"x5/16"	5"	67.0
ANCHOR BOLTS	10	5/8"	9"	9.0
STEEL STRAPS	3	4"x1/4"	7' -1"	72.3
END PLATES	2	7"x1/4"	9' -11 1/2"	118.5
PIPE SLEEVES	8	2"	6"	14.6
CONNECTION PLATES	AS REQUIRED	9"x4"x1/4"	–	–
CONNECTION BOLTS	AS REQUIRED	1"	15"	–

REINFORCING STEEL
(1-10'-0" COMPONENT)

ITEM	NO. REQ'D	SIZE	LENGTH	WT. LBS
* HORIZONTAL BARS	12	NO.4	9'-6"	76
HORIZONTAL BARS	18	NO.4	9'-9"	117
HORIZONTAL BARS	18	NO.4	7'	84
VERTICAL BARS	44	NO.4	1'-3"	37
LIFTING LUGS	4	NO.4	2'-9"	7
U BARS	18	NO.6	9'-6"	259
TOTAL				580

TIMBER

ITEM	NO. REQUIRED	SIZE	LENGTH	BD. FT.
WHEEL GUARDS	2	6"X6"	7'-3"	43.5
WING SLOPE	4	2"X6"	8'	32.0
WING SLOPE	2	2"X6"	6'-4 1/2"	12.8
WING BRACES	2	2"X6"	3'-4"	6.7
WING BRACES	4	2"X6"	5'-3"	21.0
WING BRACES	2	2"X6"	7'-3"	14.5
WING BRACES	2	2"X6"	2'-1"	4.2
WING BRACES	2	2"X6"	4'	8.0
WING BRACES	2	2"X6"	5'	10.0
WING POST	2	4"X6"	AS REQUIRED	
NAILING STRIP	2	2"X2"	2'	1.3

GALVANIZED HARDWARE

ITEM	NO. REQUIRED	SIZE	LENGTH	WT. LBS
BOLTS	8	3/4" DIA.	12"	15
WASHERS	8	3/4"	–	6
NAILS	50	40d	–	3
NAILS	72	40d	–	2 1/4
TOTAL				26 1/4

CONCRETE	
1-10'-0" COMPONENT	1.94 CU. YDS.

* - NO. 4 BARS WELDED TO IBEAMS.

SHEET 2 OF 2

NEVADA DEPARTMENT OF TRANSPORTATION

STEEL CATTLE GUARD
TYPE C

Signed Original On File | R-7.1.4.1 (617)
CHIEF ROAD DESIGN ENGR. | ADOPTED 10/70 | REVISION 5/09

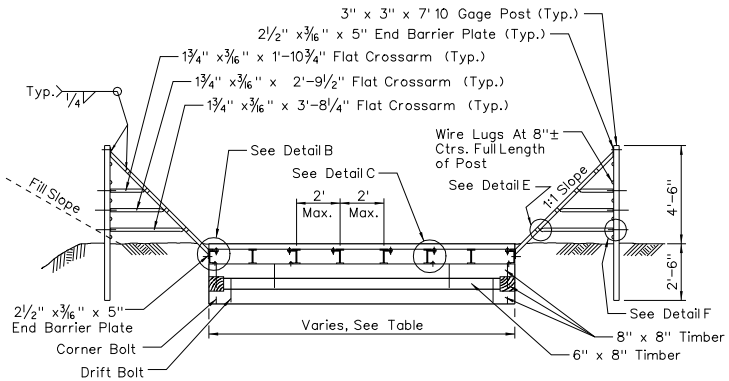

SECTION A-A

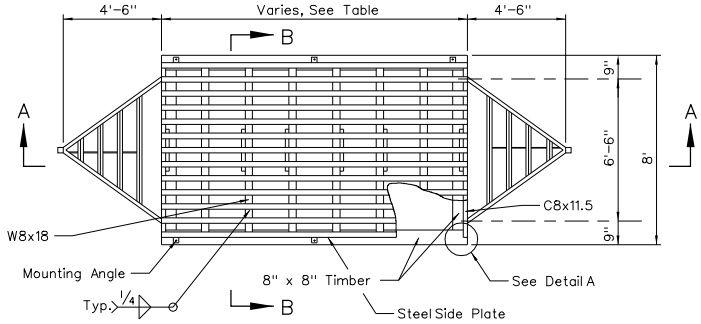

PLAN

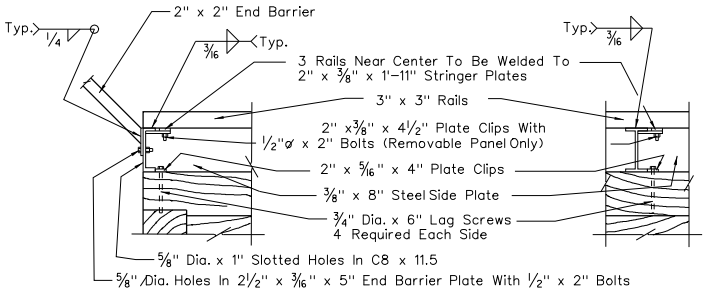

DETAIL B

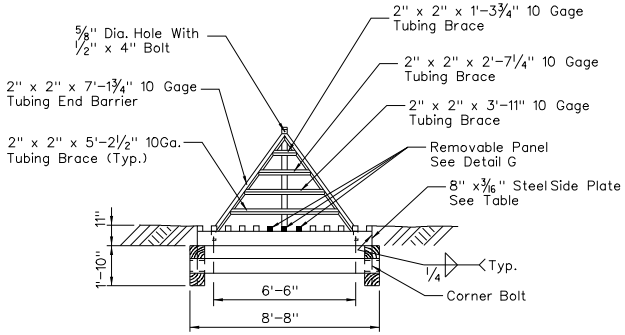

SECTION B-B

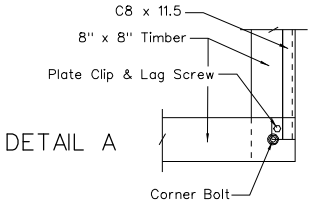

DETAIL A

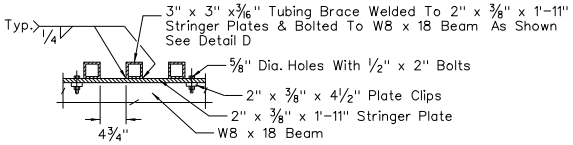

DETAIL G

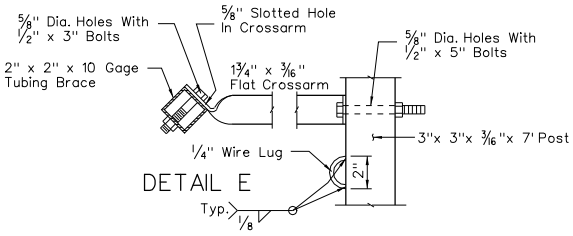

DETAIL E

DETAIL F

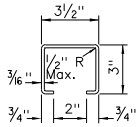

DETAIL D

A WELDED OR ROLLED UNIT OF EQUIVALENT DESIGN LOADING CAPACITY, MAY BE SUBMITTED TO THE ENGINEER FOR APPROVAL IN PLACE OF 3" X 3" X 3/16" TUBING.

SHEET 1 OF 2

NEVADA DEPARTMENT OF TRANSPORTATION

STEEL CATTLE GUARD
TIMBER FOUNDATION

Signed Original On File	R-7.1.5	(617)
CHIEF ROAD DESIGN ENGR.	ADOPTED 7/77	REVISION 5/09

R-84

NOTE: MATERIAL LIST IS FOR INFORMATION ONLY.

MATERIAL LIST FOR WINGS				
ITEM	REQD.	SIZE	LENGTH	WT. LBS.
FLAT CROSSARMS	2	1¾" X 3/16"	1' – 10¾"	4
FLAT CROSSARMS	2	1¾" X 3/16"	2' – 9½"	6
FLAT CROSSARMS	2	1¾" X 3/16"	3' – 3¼"	8
BRACES	2	2" X 2" X 10GA.	1' – 3¾"	11
BRACES	2	2" X 2" X 10GA.	2' – 7¼"	23
BRACES	2	2" X 2" X 10GA.	3' – 11"	38
BRACES	2	2" X 2" X 10GA.	5' – 2½"	45
END BARRIER	4	2" X 2" X 10GA.	7' – 1¾"	123
END BARRIER PLATES	6	2½" X 3/16"	5"	4
UPRIGHT POST	2	3" X 3" X 3/16"	7'	96

THIS DESIGN IS NOT FOR USE ON MAINLINES, RAMPS, OR CROSSROADS

GALVANIZED HARDWARE			
ITEM	NO. REQD.	SIZE	LENGTH
BOLTS	6	½"	3"
BOLTS	6	½"	5"
BOLTS	16	½"	2"
WASHERS	56	9/16"	–
WASHERS	14	13/16"	–
NUTS	28	½"	–
NUTS	14	¾"	–
LAG SCREWS	14	¾"	6"

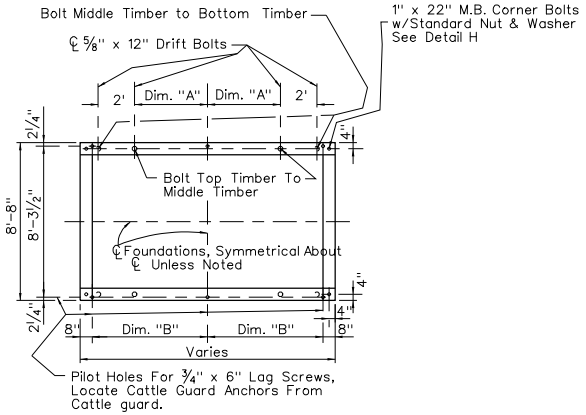

PLAN

BILL OF MATERIALS										
FRAME SIZE		LONGITUDINAL STRINGERS				STRUCTURAL STEEL				
LENGTH	WIDTH	NO. REQD.	SIZE	SPACING	WT. LBS.	ITEM	NO. REQD.	SIZE	LENGTH	WT. LBS
8'	14'	6	W8X18	EQUAL	859	RAILS	13	3" X 3" X 3/16"	14'	1249
						SIDE PLATES	2	8" X 3/16"	14'	143
8'	12'	5	W8X18	EQUAL	716	RAILS	13	3" X 3" X 3/16"	12'	1070
						SIDE PLATES	2	8" X 3/16"	12'	122
8'	10'	4	W8X18	EQUAL	573	RAILS	13	3" X 3" X 3/16"	10'	892
						SIDE PLATES	2	8" X 3/16"	10'	102
8'	8'	3	W8X18	EQUAL	430	RAILS	13	3" X 3" X 3/16"	8'	713
						SIDE PLATES	2	8" X 3/16"	8'	82

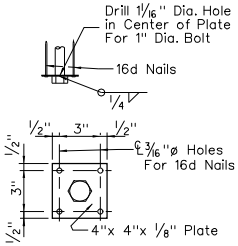

DETAIL T

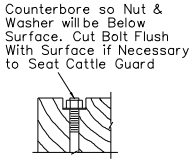

DETAIL H

MATERIAL LIST FOR ALL SIZES				
ITEM	NO. REQD.	SIZE	LENGTH	WT. LBS.
CHANNELS	2	C8 X 11.5	8'	184
STRINGER PLATES	6	2" X 3/8"	1' – 11"	30
PLATE CLIPS	12	2" X 3/8"	4½"	9
ANCHOR BOLT CLIPS	14	2" X 5/16"	4"	10

FRAME SIZE		DIM.	DIM.
LENGTH	WIDTH	"A"	"B"
8'-8"	14'	4'	6'-4"
8'-8"	12'	3'	5'-4"
8'-8"	10'	2'	4'-4"
8'-8"	8'	1'	3'-4"

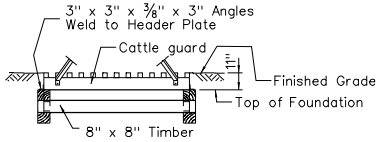

END ELEVATION
With Cattle Guard

NOTES:

1. ALTERNATE DESIGN MAY BE SUBSTITUTED BY THE CONTRACTOR FOR APPROVAL BY THE ENGINEER.
2. LIVE LOADING: H-20.
3. CATTLE GUARD IS TO BE PLACED ON LEVEL GRADE ACROSS ROADWAY – ROADWAY CROSS SLOPE IS TO TRANSITION FROM NORMAL SECTION TO LEVEL SECTION 25' BACK ON LINE AND 25' AHEAD ON LINE FROM EDGE OF CATTLE GUARD.
4. "FRAME WIDTH" COMBINATIONS MAY BE VARIED TO OBTAIN SPECIFIED WIDTH OF CATTLE GUARDS.
5. USE SELF-LOCKING NUTS ON REMOVABLE PANEL.
6. ALL WINGS SHALL BE PAINTED WHITE PER STANDARD SPECIFICATIONS.

NOTES:

1. USE SINGLE LAYER FOUNDATION UNIT FOR EACH CATTLE GUARD FRAME.
2. TIMBERS USED IN FOUNDATIONS SHALL BE TREATED.

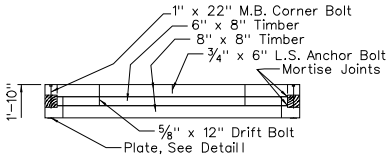

SIDE ELEVATION
Without Cattle Guard

TIMBER FOUNDATION DETAILS

SHEET 2 OF 2

NEVADA DEPARTMENT OF TRANSPORTATION

STEEL CATTLE GUARD
TIMBER FOUNDATION

Signed Original On File	R-7.1.5.1	(617)
CHIEF ROAD DESIGN ENGR.	ADOPTED 7/77	REVISION 5/09

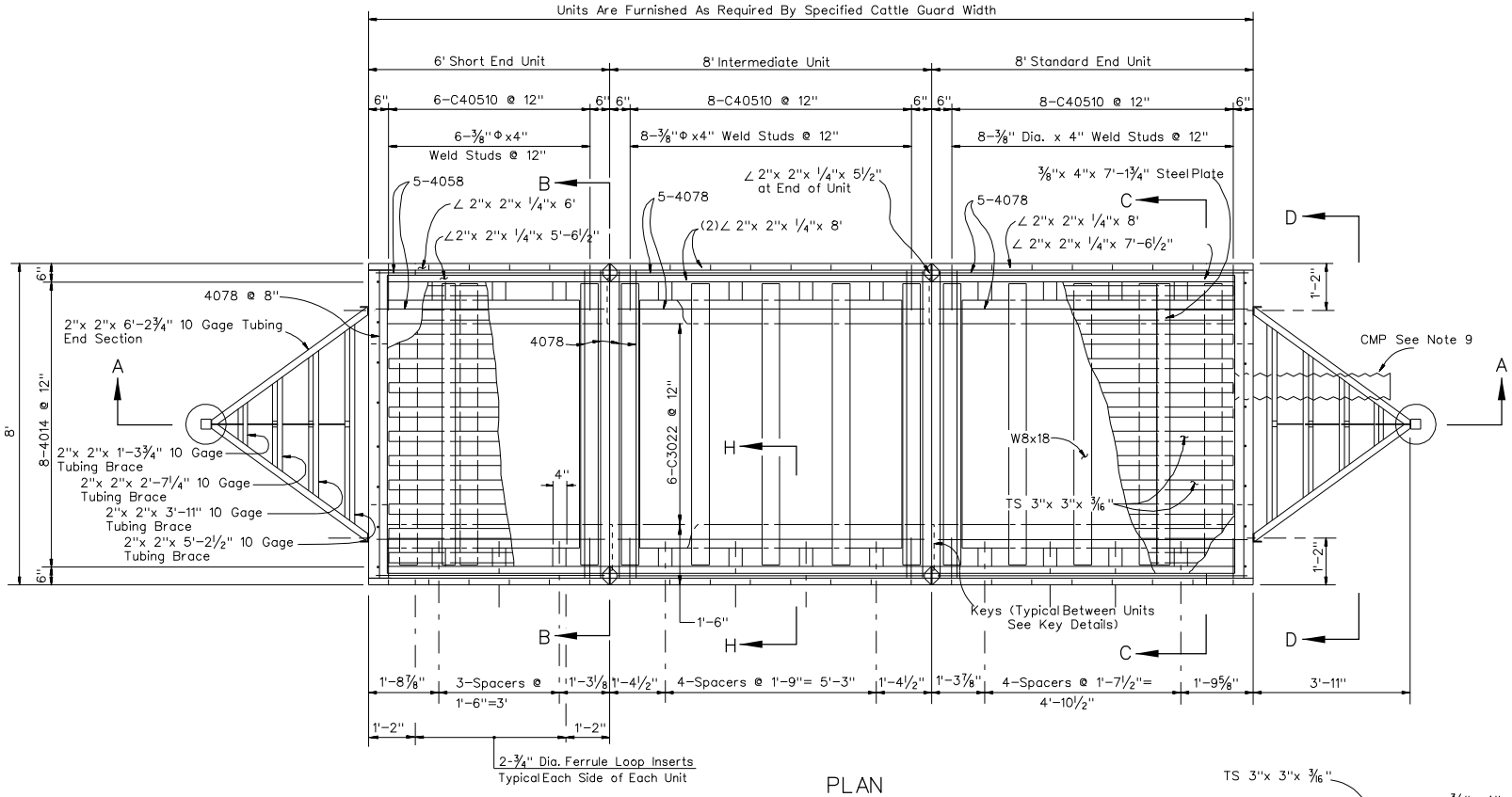

PLAN

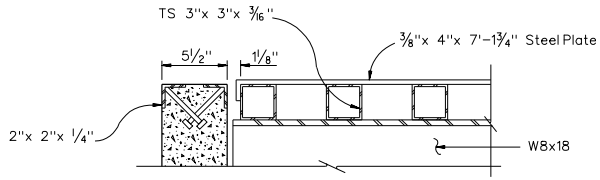

ELEVATION
SECTION H-H

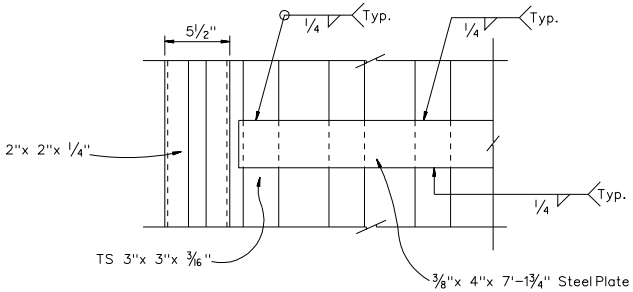

PLAN

NOTES:

1. PRECAST CONCRETE SHALL REACH Fc' = 4500 PSI AT 28 DAYS. ALL OTHER CONCRETE SHALL BE CLASS A OR AA.
2. REINFORCING STEEL SHALL BE GRADE 40 (Fs =20,000 PSI).
3. DESIGN LIVE LOAD H-20.
4. MINIMUM SOIL BEARING PRESSURE OF 4000 LBS/FT^2 SHALL BE OBTAINED BY PLACING A FINE AGGREGATE (SECTION 706.03.03) BED 3" THICK OVER SOIL COMPACTED TO NOT LESS THAN 95% DENSITY AND HAND LEVELED.
5. STRUCTURAL STEEL SHALL CONFORM TO ASTM A36.
6. FASTENERS SHALL BE GALVANIZED.
7. BEARING PADS SHALL BE 50 DUROMETER HARDNESS.
8. CATTLE GUARD SHALL BE SLOPED TO CONFORM TO THE ROADWAY CROSS SECTION.
9. WHEN CATTLE GUARD IS INSTALLED ADEQUATE DRAINAGE SHALL BE PROVIDED TO INSURE AGAINST POSSIBLE SUBGRADE DAMAGE. DRAINAGE DETAILS SHALL BE AS SHOWN ON THE PLANS. 8" CMP TO BE INSTALLED AT LOW END. SEE STRUCTURE LIST FOR LENGTH OF CMP, 2' MINIMUM.
10. APPROVED ALTERNATE DESIGNS MAY BE USED.
11. METAL WINGS SHALL BE PAINTED WHITE PER STANDARD SPECIFICATIONS.
12. SHOP DRAWINGS SHOWING THE DETAILS OF FABRICATION AND THE PROPOSED LAYOUT OF UNITS SHALL BE SUBMITTED TO THE ENGINEER FOR APPROVAL.
13. CATTLE GUARD WIDTH SHALL INCLUDE A 2' SHY DISTANCE FROM THE NORMAL EDGE OF PAVEMENT, EACH SIDE (PER AASHTO).

SHEET 1 OF 4

NEVADA DEPARTMENT OF TRANSPORTATION

PRECAST CATTLE GUARD

Signed Original On File	R-7.1.6	(617)
CHIEF ROAD DESIGN ENGR.	ADOPTED 11/88	REVISION 5/09

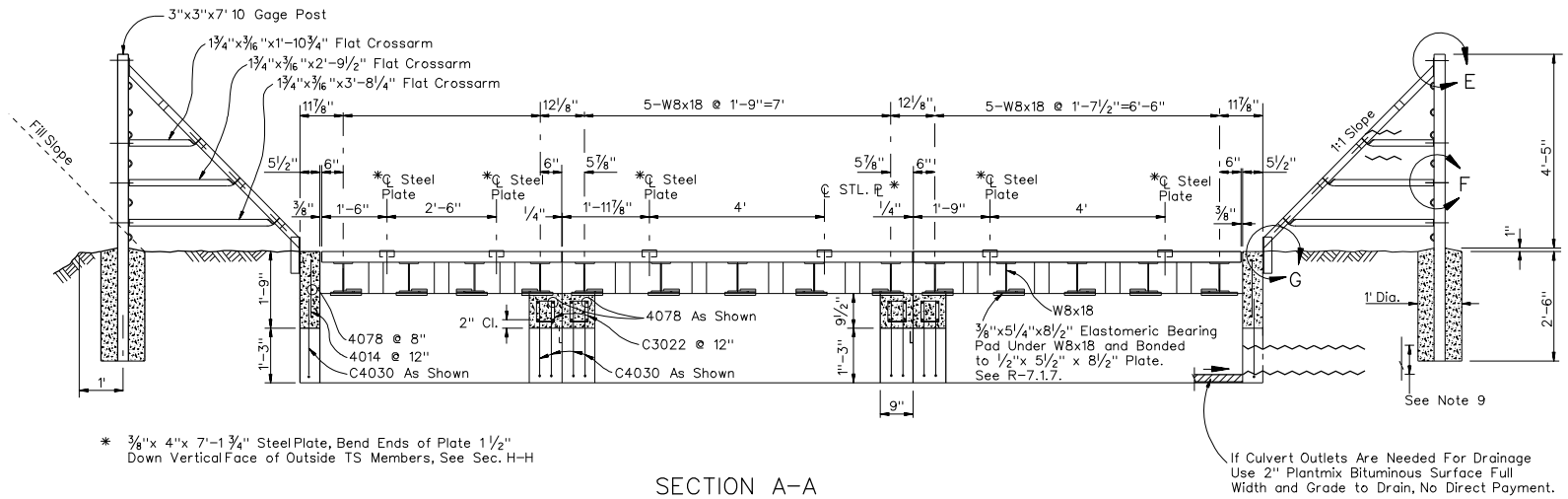

* ⅜"x 4"x 7'-1¾" Steel Plate, Bend Ends of Plate 1½" Down Vertical Face of Outside TS Members, See Sec. H-H

SECTION A-A

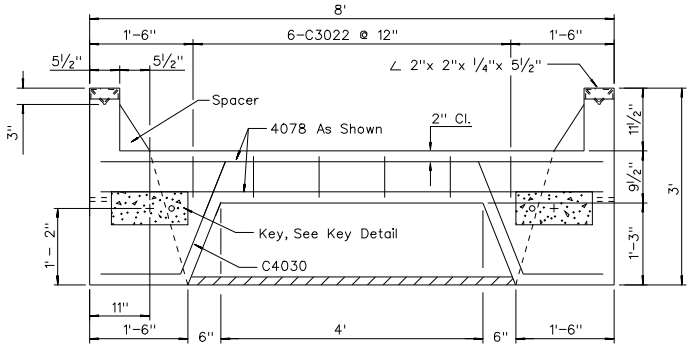

SECTION B-B

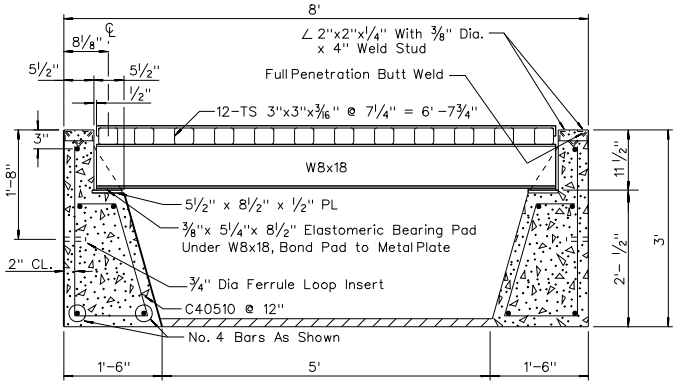

SECTION C-C

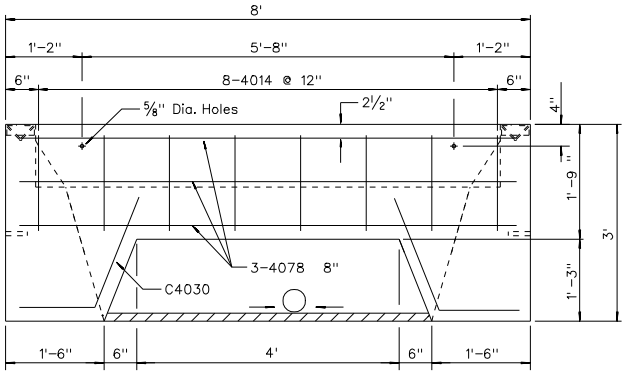

SECTION D-D

All Dimensions, Keys, Reinforcing, & Structural Steel Typical All Units

SHEET 2 OF 4

NEVADA DEPARTMENT OF TRANSPORTATION

PRECAST CATTLE GUARD

Signed Original On File	R-7.1.6.1	(617)
CHIEF ROAD DESIGN ENGR.	ADOPTED 11/88	REVISION 5/09

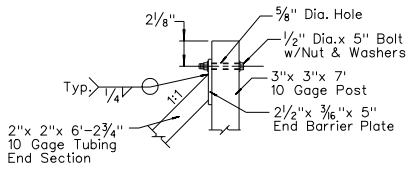

DETAIL E

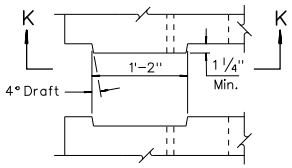

PLAN

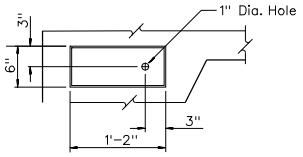

VIEW K-K

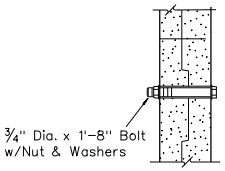

TYPICAL KEY CONNECTION

KEY DETAILS

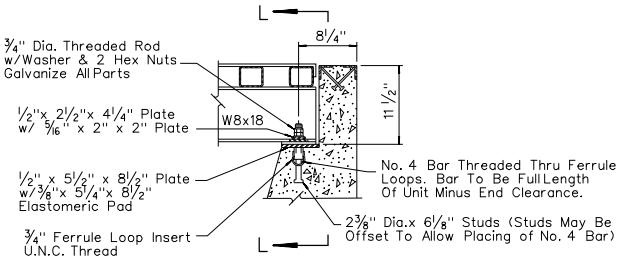

W8x18 ANCHOR ASSY.

NOTES:

1. ½" x 5½" x 8½" PLATE WITH FERRULE AND STUDS ATTACHED IS TO BE CAST IN THE CONCRETE FRAME. AFTER THE CONCRETE FRAME HAS BEEN MANUFACTURED: THE ¾" DIA. A307 THREADED ROD ① IS TO BE TIGHTENED INTO THE FERRULE. THE ROD IS THEN TO BE WELDED ② TO THE PLATE. THE ELASTOMERIC PAD IS THEN BONDED TO THE PLATE. THE STEEL GRATE IS THEN PLACED AND ADJUSTED TO ITS SPECIFIC POSITION. THE METAL CLAMPS ARE PLACED AND THE NUTS TIGHTENED. THE FIRST NUT IS JUST TO BE SNUG TIGHT. THE SECOND NUT IS TO BE TIGHT AGAINST THE FIRST NUT TO LOCK IT IN PLACE. AFTER A FINAL CHECK THAT THE STEEL GRATE IS STILL IN ITS SPECIFIED POSITION, THE METAL CLAMPING PLATE IS THEN WELDED ③ TO THE FRAME OF THE STEEL GRATE. ALL WELDING SHALL BE DONE AT THE PLACE OF THE FABRICATION. IF STEEL GRATE AND CONCRETE FRAME ARE SHIPPED SEPARATELY, THEY SHALL BE MATCH MARKED.

2. ALTERNATE: USE OF J-BOLT.
   ½" x 5½" x 8½" PLATE WITH ¾" DIA. A307 J-BOLT ① AND STUDS ATTACHED IS TO BE CAST IN THE CONCRETE FRAME. THE J-BOLT IS TO BE WELDED TO BOTH FACES OF THE PLATE ②. THE ELASTOMERIC PAD IS BONDED TO THE PLATE. THE STEEL GRATE IS PLACED AND ADJUSTED TO ITS SPECIFIED POSITION. THE METAL CLAMPS ARE PLACED AND THE NUTS TIGHTENED. THE FIRST NUT IS JUST TO BE SNUG TIGHT. THE SECOND NUT IS TO BE TIGHT AGAINST THE FIRST NUT TO LOCK IT IN PLACE. AFTER A FINAL CHECK THAT THE STEEL GRATE IS IN ITS SPECIFIED POSITION, THE METAL CLAMPING PLATE IS WELDED ③ TO THE FRAME OF THE STEEL GRATE. ALL WELDING SHALL BE DONE AT THE PLACE OF FABRICATION. IF STEEL GRATE AND CONCRETE FRAME ARE SHIPPED SEPARATELY, THEY SHALL BE MATCH MARKED.

3. PRECAST CONCRETE SHALL REACH Fc' = 4500 PSI AT 28 DAYS. ALL OTHER CONCRETE SHALL BE CLASS A OR AA.

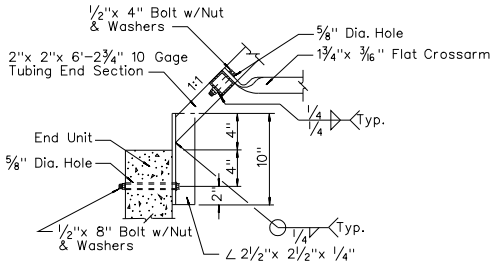

DETAIL G

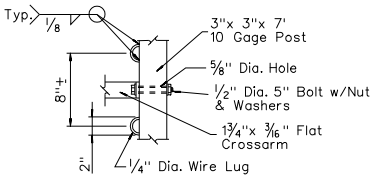

DETAIL F

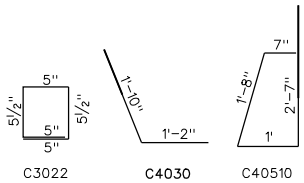

BAR BENDING DETAILS

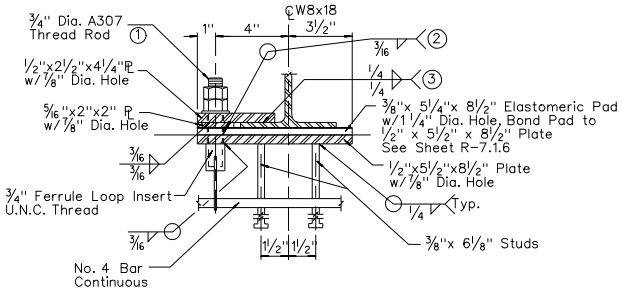

SECTION L-L

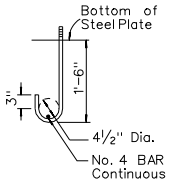

J-BOLT ALTERNATIVE

SHEET 3 OF 4

NEVADA DEPARTMENT OF TRANSPORTATION

PRECAST CATTLE GUARD

Signed Original On File	R-7.1.6.2	(617)
CHIEF ROAD DESIGN ENGR.	ADOPTED 11/88	REVISION 5/09

R-88

TYPICAL CATTLE GUARD INSTALLATION ON CROWNED ROADWAYS

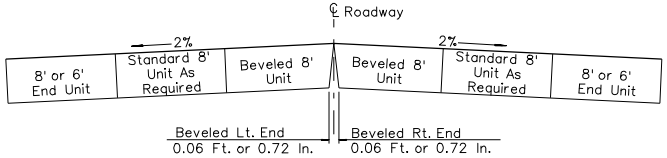

Install Using an Even Number of Units as Shown Above and Indicated in the Table Below

UNITS FOR ROADWAY CROWNED AT					
WIDTH OF ROADWAY	LENGTH OF END UNITS	8 FT. UNITS BEVELED	8 FT. UNITS STANDARD	LENGTH SUPPLIED	LENGTH BEYOND SHOULDER
24'	2 @ 6'	2		28'	2'
26'	2 @ 6'	2		28'	1'
28'	2 @ 6'	2		28'	0'
30'	2 @ 8'	2		32'	1'
32'	2 @ 8'	2		32'	0'
34'	2 @ 6'	2	2	44'	5'
36'	2 @ 6'	2	2	44'	4'
38'	2 @ 6'	2	2	44'	3'
40'	2 @ 6'	2	2	44'	2'
42'	2 @ 6'	2	2	44'	1'
44'	2 @ 6'	2	2	44'	0'
46'	2 @ 8'	2	2	48'	1'
48'	2 @ 8'	2	2	48'	0'
50'	2 @ 6'	2	4	60'	5'
52'	2 @ 6'	2	4	60'	4'
54'	2 @ 6'	2	4	60'	3'
56'	2 @ 6'	2	4	60'	2'
58'	2 @ 6'	2	4	60'	1'
60'	2 @ 6'	2	4	60'	0'

NOTES:

1. PRECAST CONCRETE SHALL REACH Fc' = 4500 PSI AT 28 DAYS. ALL OTHER CONCRETE SHALL BE CLASS A OR AA.
2. MATERIAL LIST IS FOR INFORMATION ONLY.

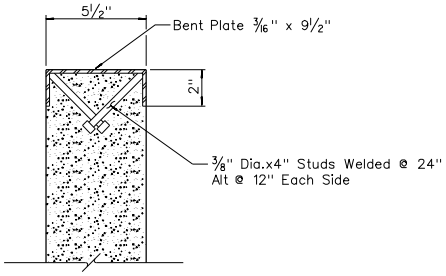

ALTERNATE ARMOR DETAIL

This Detail May be Substituted for The 2"x 2"x ¼" Armor Angles at The Contractors Option.

STRUCTURAL STEEL				
UNIT	ITEM	REQ'D	LENGTH	WT. LBS.
SHORT END	TS3" x 3" x 3/16"	12	5'-6"	678
	W8 x18	4	7'	504
	L 2" x 2" x ¼"	2	0'-5½"	3
	L 2" x 2" x ¼"	2	6'	38
	L 2" x 2" x ¼"	2	5'-6½"	35
	3/8" DIA. STUD	12	0'-4"	2
	ANCHOR ASSY.	8	--------	90
	3/8" x 4" PLATE	2	7'-1¾"	73
				1423
INTERMEDIATE	TS3" x 3" x 3/16"	12	7'-11¾"	984
	W8 x18	5	7'	630
	L 2" x 2" x ¼"	4	0'-5½"	6
	L 2" x 2" x ¼"	4	8'	102
	3/8" DIA. STUD	14	0'-4"	2
	ANCHOR ASSY.	10	--------	113
	3/8" x 4" PLATE	2	7'-1¾"	73
				1910
STANDARD END	TS3" x 3" x 3/16"	12	7'-6"	925
	W8 x18	5	7'	630
	L 2" x 2" x ¼"	2	0'-5½"	3
	L 2" x 2" x ¼"	2	8'	51
	L 2" x 2" x ¼"	2	7'-6½"	48
	3/8" DIA. STUD	14	0'-4"	2
	ANCHOR ASSY.	10	--------	113
	3/8" x 4" PLATE	2	7'-1¾"	73
				1845

REINFORCING STEEL AND CONCRETE				
UNIT	NO. REQ'D	BAR MARK	WT. LBS.	CONCRETE
SHORT END	7	4078	36	1.68 C.Y.
	10	4058	38	
	8	4014	7	
	6	C3022	5	
	12	C40510	47	
	6	C4030	12	
			145	
INTERMEDIATE	18	4078	92	1.76 C.Y.
	12	C3022	10	
	8	C4030	16	
			180	
STANDARD END	17	4078	87	2.11 C.Y.
	8	4014	7	
	6	C3022	5	
	16	C40510	62	
	6	C4030	12	
			173	

HARDWARE				
LOCATION	ITEM	NO. REQ'D	SIZE	LENGTH
WINGS PER UNIT CONNECTION	BOLTS	4	½"	8"
	BOLTS	6	½"	4"
	BOLTS	8	½"	5"
	WASHERS	36	17/32"	–
	NUTS	18	½"	–
	BOLTS	2	¾"	1'-8"
	WASHERS	4	13/16"	–
	NUTS	2	¾"	–

MATERIAL LIST FOR WINGS				
ITEM	REQ'D	SIZE	LENGTH	WT. LBS.
FLAT CROSSARMS	2	1¾"x3/16"	1'-10¾"	4
FLAT CROSSARMS	2	1¾"x3/16"	2'-9½"	6
FLAT CROSSARMS	2	1¾"x3/16"	3'-8¼"	8
BRACES	2	2"x2"x10 GA	1'- 3¾"	11
BRACES	2	2"x2"x10 GA	2'- 7¼"	23
BRACES	2	2"x2"x10 GA	3'-11"	38
BRACES	2	2"x2"x10 GA	5'- 2½"	45
END BARRIER	4	2"x2"x10 GA	6'- 2¾"	107
BARRIER PLATES	2	2½"x2½"x¼"	0'-5"	1
BARRIER ANGLES	4	2½"x 2½"x¼"	0'-10"	14
UPRIGHT POSTS	2	3"x3"x3/16"	7'	96

– Limits of Excavation & Granular Backfill

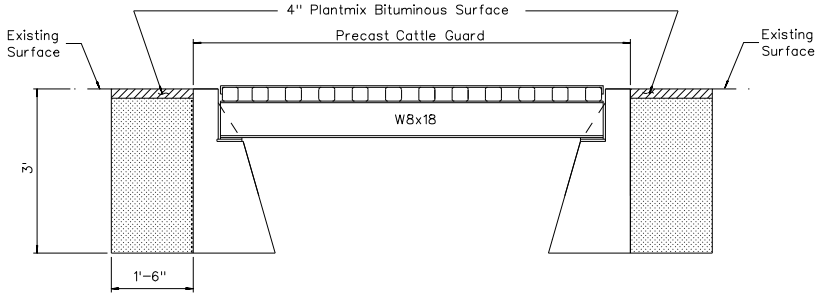

METHOD OF PATCHING AT PRECAST CATTLE GUARDS

SHEET 4 OF 4

NEVADA DEPARTMENT OF TRANSPORTATION

PRECAST CATTLE GUARD

Signed Original On File	R-7.1.6.3	(617)
CHIEF ROAD DESIGN ENGR.	ADOPTED 11/88	REVISION 5/09

R-89

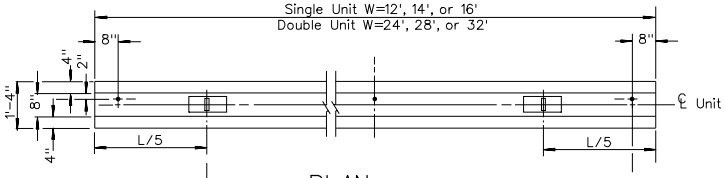

PLAN
FOUNDATION

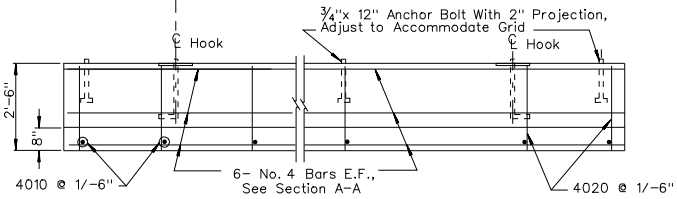

ELEVATION
FOUNDATION

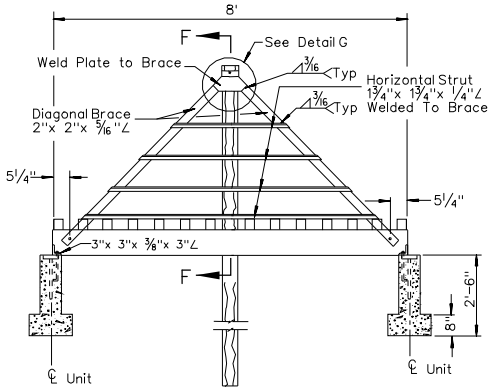

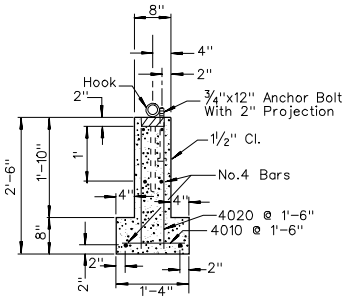

SECTION A-A

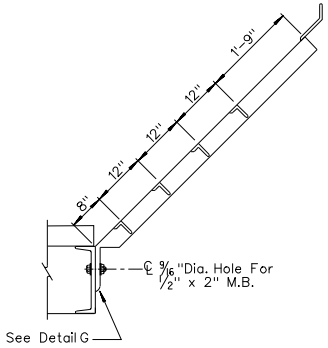

SECTION F-F

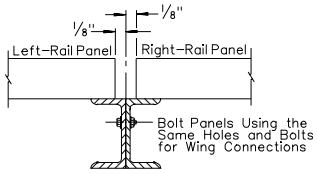

CONNECTION FOR MULTIPLE
INSTALLATION

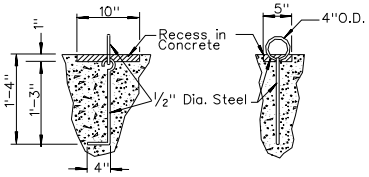

SIDE VIEW END VIEW

DETAIL B

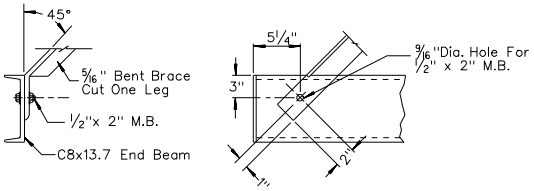

END VIEW SIDE VIEW

DETAIL G

SHEET 1 OF 2

NEVADA DEPARTMENT OF TRANSPORTATION

STEEL CATTLE GUARD
GRID AND WINGS
& CATTLE GUARD
FOUNDATION (BLM)

Signed Original On File	R-7.1.9		(617)
CHIEF ROAD DESIGN ENGR.	ADOPTED 1/95	REVISION 5/09	

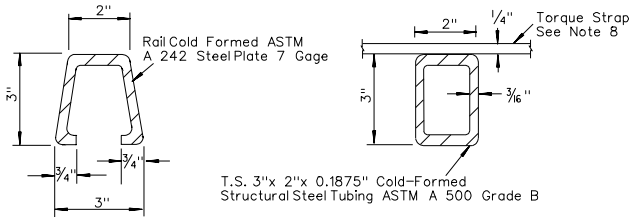

ALTERNATE RAIL

When Using Alternate Rail, Use
15 Rails Evenly Spaced

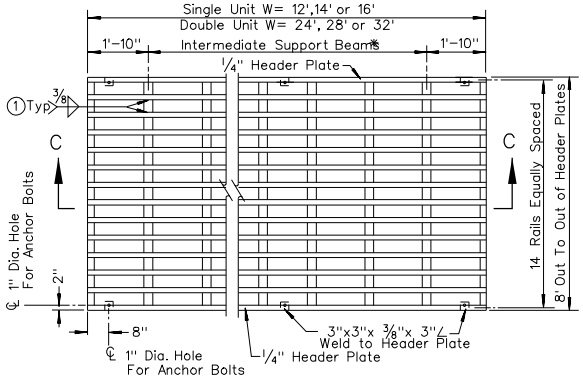

PLAN
GRID

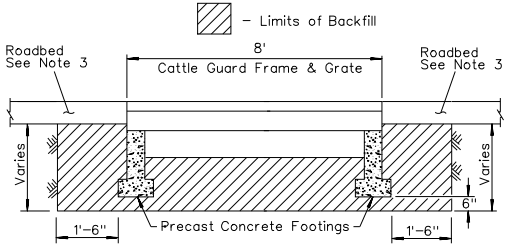

BACKFILL DETAIL

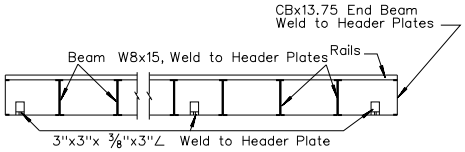

SECTION C-C

1 Weld Rails to Intermediate and
End Beams At Junctures

* - Spacing For W=12' is 1'-6"
W=14' is 1'-6 2/3"
W=16' is 1'-8 1/8"

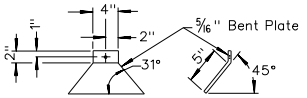

SIDE VIEW SIDE VIEW

DETAIL D

NOTES:

1. PRECAST CONCRETE SHALL REACH Fc' = 4500 PSI AT 28 DAYS. ALL OTHER CONCRETE SHALL BE CLASS A OR AA.
2. STANDARD NUTS & WASHERS SHALL BE FURNISHED WITH EACH FOUNDATION UNIT INCLUDING ANCHOR ANGLES. WELD OR BOLT ANCHOR ANGLES TO CATTLE GUARD.
3. ON EARTH-SURFACED ROADS, SET TOP OF CATTLE GUARD EIGHT INCHES ABOVE SUBGRADE UNLESS PLANS OR STAKES INDICATE ANOTHER ELEVATION. TAPER FILL BACK FROM CATTLE GUARD APPROX. 50' IN BOTH DIRECTIONS.
4. NO. 4 REINFORCEMENT MAY BE SPLICED WITH 24" LAP UNLESS PROHIBITED.
5. SEE PROJECT PLANS FOR WIDTH (W).
6. BOLTS ARE TO BE SUPPLIED WITH STANDARD NUTS AND WASHERS.
7. RAILS SHALL BE PLACED ADJACENT TO THE HEADER PLATES.
8. PROVIDE FOUR 7'10" x 2" x 1/4" TORQUE BARS EQUALLY SPACED, WELDED BY 3/16" FILLET WELDS PERPENDICULAR TO THE TOP OF THE RAILS WHEN ALTERNATE RECTANGULAR TUBE RAILS ARE PROVIDED.
9. STEEL FOR COMPONENTS SHALL BE ASTM A 36, UNLESS INDICATED OTHERWISE ON THE DRAWING.
10. DESIGN LOADING OF GRID SHALL CONFORM TO AASHTO H-20.

ESTIMATED QUANTITIES FOR FOUNDATION

DESCRIPTION	QUANTITIES				
UNIT WIDTHS	14'	16'	24'	28'	32'
CONCRETE	2.2 C.Y.	2.5 C.Y.	3.8 C.Y.	4.4 C.Y.	5.0 C.Y.
#4 REINFORCING STEEL	276 L.F.	311 L.F.	471 L.F.	543 L.F.	624 L.F.

SHEET 2 OF 2

NEVADA DEPARTMENT OF TRANSPORTATION

STEEL CATTLE GUARD
GRID AND WINGS
& CATTLE GUARD
FOUNDATION (BLM)

Signed Original On File	R-7.1.9.1	(617)
CHIEF ROAD DESIGN ENGR.	ADOPTED 1/95	REVISION 5/09

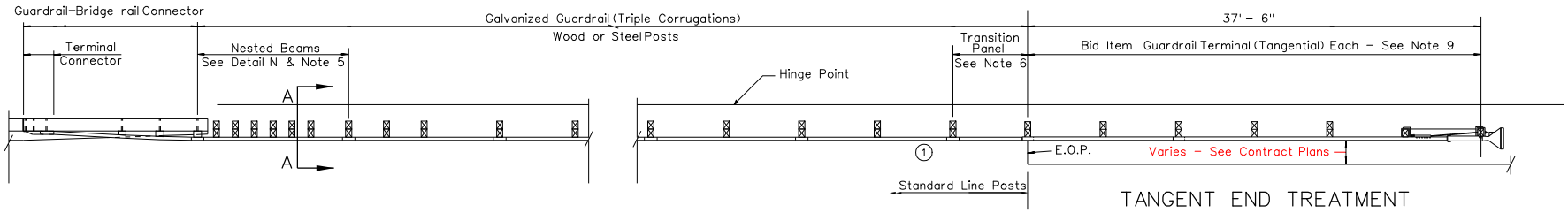

TANGENT END TREATMENT

1 On Retrofit Installation Paving is Optional. On New Construction Paving is Required. See R-8.2.1

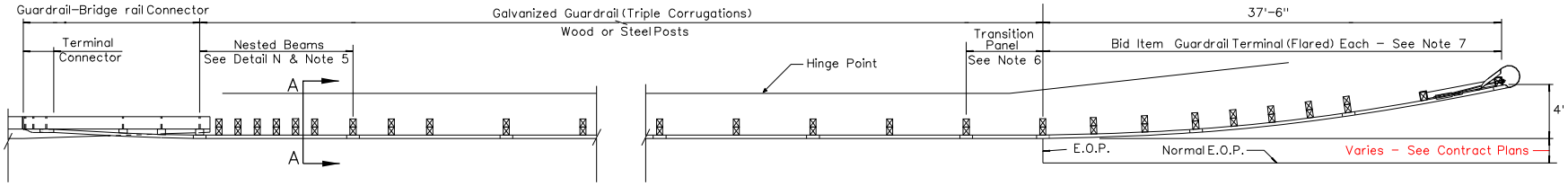

FLARED END TREATMENT

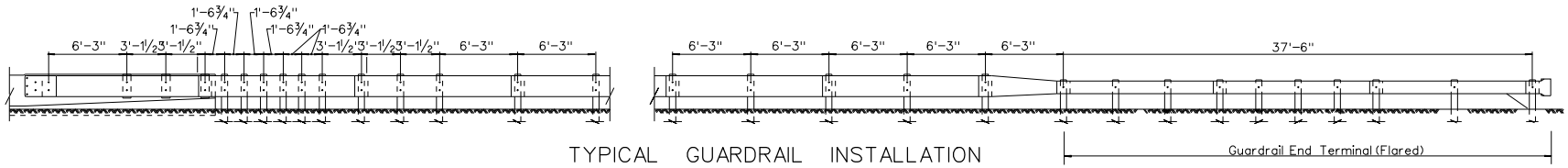

TYPICAL GUARDRAIL INSTALLATION

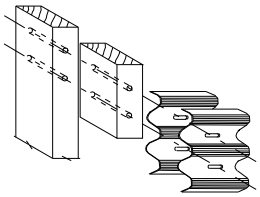

DETAIL N
NESTED BEAMS

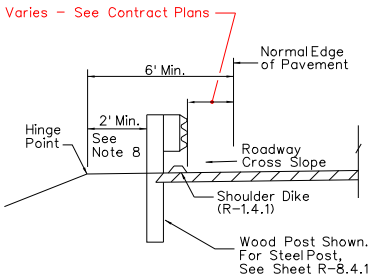

SECTION A-A

NOTES:

1. FOR DETAILS AND DIMENSIONS NOT SHOWN SEE SHEETS R-8.1.2 THRU R-8.4.3.
2. SEE SHEET T-35.3.1 FOR SPECIAL GUARDRAIL TERMINAL END FOR RAILROAD CROSSING.
3. SEE SHEET R-8.2.2 FOR TRAILING END ANCHOR.
4. MINIMUM INSTALLATION:

GUARDRAIL-BRIDGE RAIL CONNECTOR	- 14'-4¾"
NESTED BEAM SECTION	- 12'-6"
THRIE BEAM SECTION	- 12'-6"
TRANSITION PANEL	- 6'-3"
APPROVED "350" TERMINAL	- 37'-6"
	83'-1¾"

ANY OTHER VARIATION THAT REDUCES THE MINIMUM LENGTH SHALL REQUIRE APPROVAL OF THE CHIEF ROAD DESIGN ENGINEER.

5. NO DIRECT PAYMENT FOR THE ADDITIONAL GUARDRAIL PANEL.
6. THE LENGTH OF THE TRANSITION PANEL (6'-3") SHALL BE ADDED TO THE ESTIMATED LENGTH OF THE THRIE BEAM GUARDRAIL, SEE SHEET R-8.4.1.
7. FOR GRADING DETAILS NOT SHOWN, SEE SHEET R-8.2.1. FOR OTHER APPROVED "350" TERMINALS NOT SHOWN, REFER TO MANUFACTURERS DRAWINGS.
8. ON RETROFIT INSTALLATIONS IF MINIMUM CANNOT BE MET AND THE DISTANCE BETWEEN BACK OF POST AND HINGE POINT IS LESS THAN 2', THE POST SHALL BE LENGTHENED 1' MIN.
9. WHEN GUARDRAIL IS PLACED AT NORMAL EDGE OF PAVEMENT, THE TANGENT END TREATMENT SHALL BE FLARED @ 50:1 TAPER TO GET HEAD PIECE CLEAR OF EDGE OF PAVEMENT.
10. APPROACH GUARDRAIL TERMINALS SHALL BE "NCHRP 350", FHWA, AND NDOT APPROVED.
11. A REFLECTORIZED OBJECT MARKER SHALL BE INSTALLED ON THE IMPACT HEAD OF THE APPROVED "350" TERMINAL PER MANUFACTURERS RECOMMENDATIONS.
12. ALL WOOD/STEEL POSTS SHALL BE STAMPED WITH THE LENGTH ON OR NEAR THE TOP SURFACE IN A CONSPICUOUS PLACE. THE STAMPED LETTERING SHALL BE 1½" HIGH AND ¼" DEEP FOR WOOD AND ¼" TO ⅜" IN HEIGHT FOR STEEL. IF THE LETTERING IS DISTURBING DURING INSTALLATION IT SHALL BE RE-STAMPED.

NEVADA DEPARTMENT OF TRANSPORTATION

TYPICAL GUARDRAIL INSTALLATION

Signed Original On File	R-8.1.1	(618)
CHIEF ROAD DESIGN ENGR.	ADOPTED 1/89	REVISION 6/09

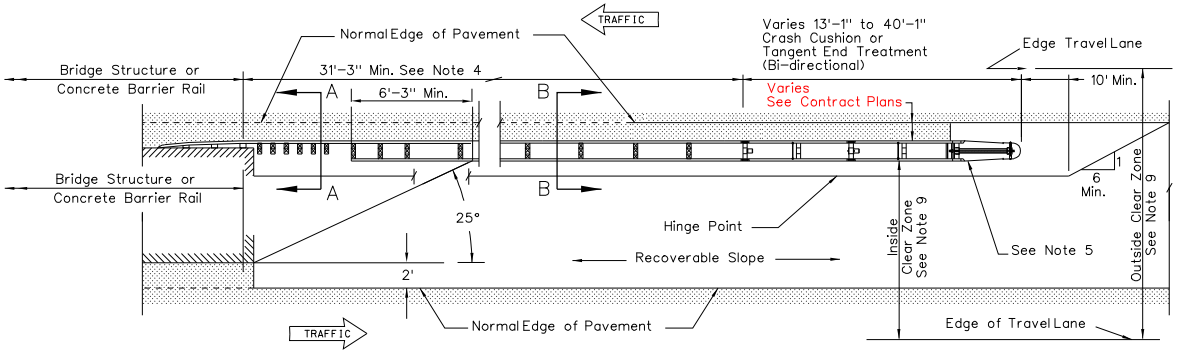

NOTES:

1. FOR END TREATMENTS NOT SHOWN, REFER TO MANUFACTURER'S DRAWINGS.
2. SHOULDER DIKES, DOWN DRAIN, AND CURBS ARE NOT TO BE INSTALLED IN THESE AREAS.
3. SEE SHEET R-8.2.2 FOR DETAILS NOT SHOWN.
4. GALVANIZED GUARDRAIL (TRIPLE CORRUGATIONS): SEE SHEET R-8.4.1 AND R-8.4.1.1.
5. CRASH CUSHION OR TANGENT END TREATMENT (BI-DIRECTIONAL) CAN BE FLARED AT 50:1 TAPER.
6. RECOVERABLE SLOPES REQUIRED BEHIND GATING PORTION OF END TREATMENT OR CRASH CUSHION.
7. ON RETROFIT INSTALLATIONS WHEN DISTANCE BETWEEN BACK OF POST AND HINGE POINT IS LESS THAN 2', THE POST SHALL BE LENGTHENED 1' MINIMUM.
8. GUARDRAIL HEIGHTS ON STAGE CONSTRUCTION PROJECTS SHALL BE GOVERNED BY FINAL SURFACING HEIGHT.
9. REFERENCE: AASHTO ROADSIDE DESIGN GUIDE, CURRENT EDITION.
10. CLEAR ZONE SHOULD BE BASED ON DESIGN YEAR TRAFFIC VOLUMES.
11. RECOVERABLE SLOPES ARE 4:1 OR FLATTER.

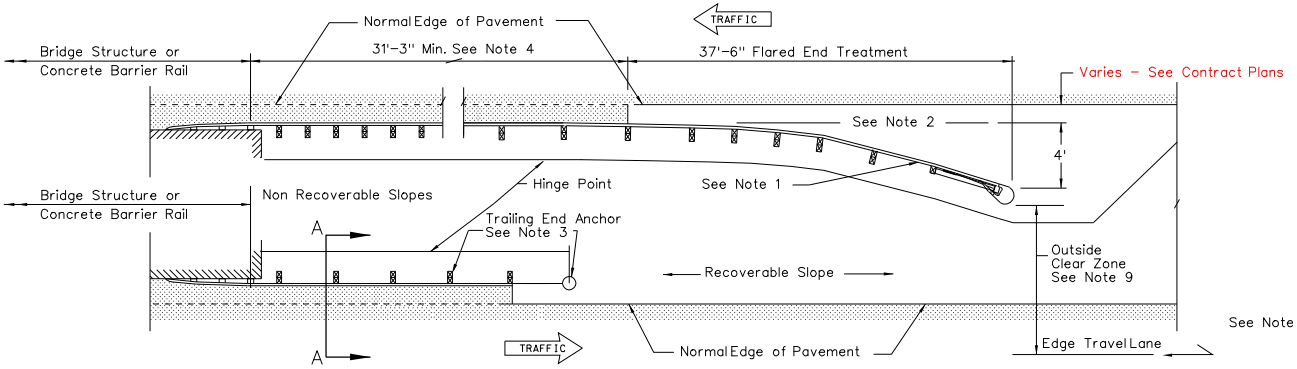

LEGEND:

- PAVED AREAS

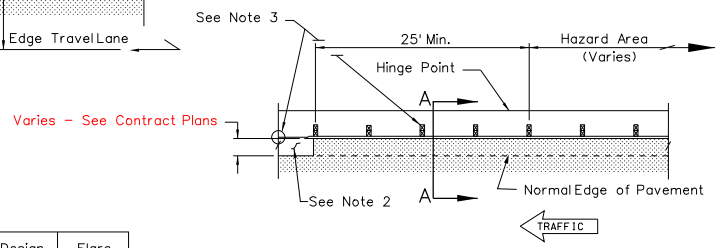

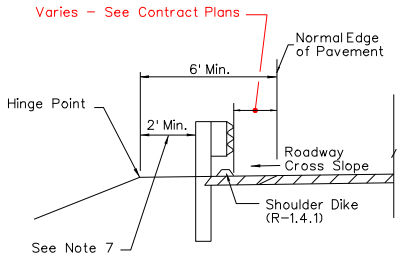

SECTION A-A

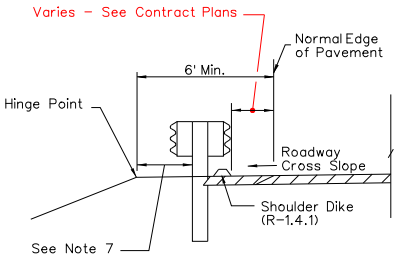

SECTION B-B

Design Speed (MPH)	Flare Rate
75	16:1
70	15:1
60	13:1
50	11:1
40	9:1
30	7:1

GUARDRAIL FLARE RATES

NEVADA DEPARTMENT OF TRANSPORTATION

TYPICAL GUARDRAIL INSTALLATION

Signed Original On File	R-8.1.2	(618)
CHIEF ROAD DESIGN ENGR.	ADOPTED 7/96	REVISION 6/09

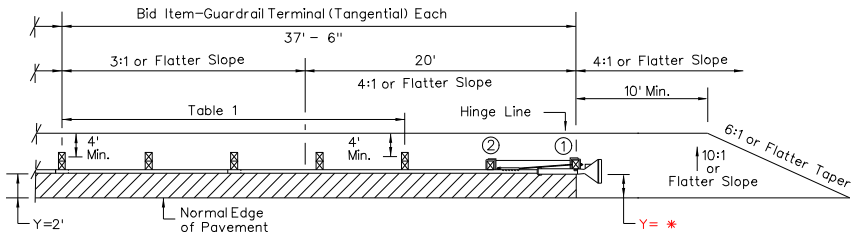

METHOD A
GUARDRAIL TERMINAL (TANGENTIAL)

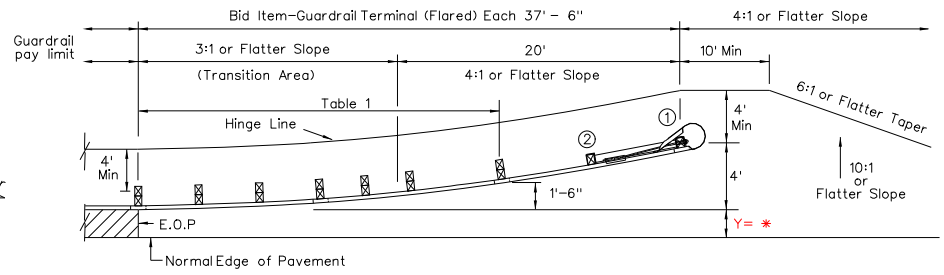

METHOD C
GUARDRAIL TERMINAL (FLARED) (PARABOLIC)

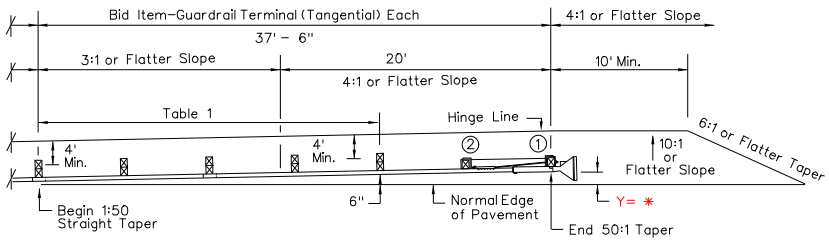

METHOD B
Terminal at 50:1 Straight Taper
GUARDRAIL TERMINAL (TANGENTIAL)

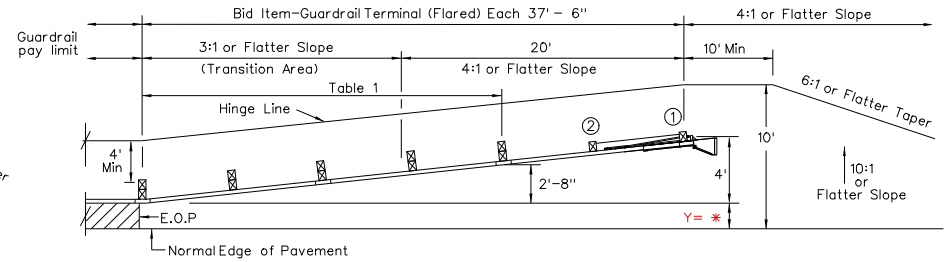

METHOD D
GUARDRAIL TERMINAL (FLARED) (STRAIGHT)

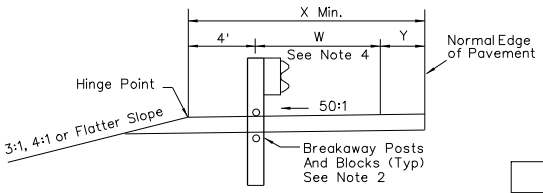

TABLE 1 SECTION

TABLE 1			
Terminal Ends	W (Flare)	X (Widening)	Y (Shy)
Method A	1'–3¼"	7'–3¼"	✳
Method B	1'–3¼"	5'–3¼" to 5'–9¼"	✳
Method C	1'–3¼" to 2'–9¼"	7'–3¼" to 8'–9¼"	✳
Method D	1'–3¼" to 3'–11¼"	7'–3¼" to 9'–11¼"	✳
✳ Varies – See Contract Plans			

NOTES:

1. FOR TYPICAL GUARDRAIL INSTALLATION, SEE SHEET R-8.1.1.
2. FOR DETAILS NOT SHOWN, INCLUDING HEIGHTS OF POSTS FOR SOIL TUBE INSTALLATION ON POSTS ① AND ②, SEE MANUFACTURER'S DRAWINGS.
3. APPROACH AND TRAILING END GUARDRAIL TERMINALS SHALL BE "NCHRP REPORT 350" TEST LEVEL 3 (TL-3), FHWA, AND NEVADA DOT APPROVED.
4. "W" IS TO THE CENTER OF POST, EXCLUDING POSTS ① AND ②. USE TABLE 1 FOR BREAKAWAY POSTS WITH BLOCKS, EXCLUDING POSTS ① AND ②.

LEGEND:

PAVED AREAS

NEVADA DEPARTMENT OF TRANSPORTATION

GUARDRAIL TERMINALS
GRADING PLAN

Signed Original On File	R-8.2.1	(618)
CHIEF ROAD DESIGN ENGR.	ADOPTED 4/98	REVISION 6/09

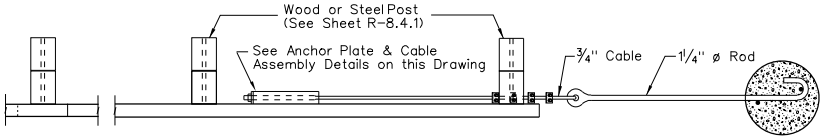

PLAN

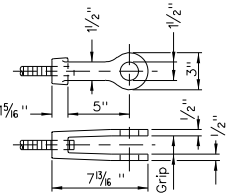

Grip=Thickness of Eye on Anchor Rods +1/4"

CLEVIS

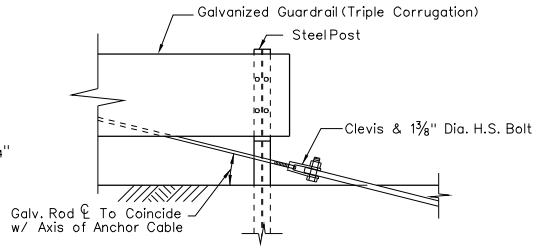

DETAIL B
CABLE ANCHOR ASSEMBLY STEEL POST GUARD RAIL
See Note 3

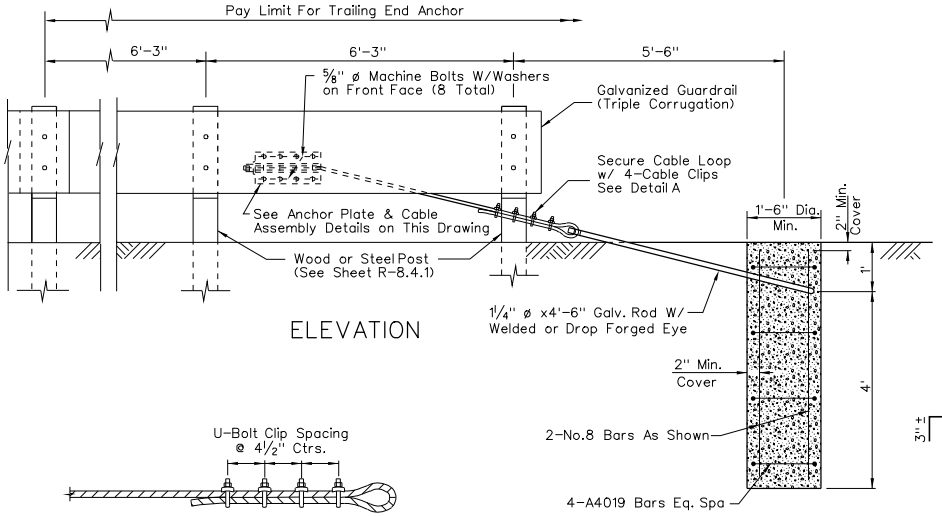

ELEVATION

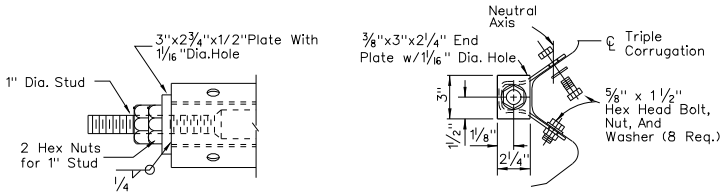

ANCHOR PLATE DETAILS

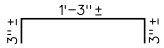

A4019

U-Bolts Clip on Short End of Cable
and Tighten to 50 Ft.-Lb.

DETAIL A
CABLE CLIP INSTALLATION
See Note 3

NOTES:

1. ANCHOR CABLE TO BE PARALLEL TO GUARD RAIL FOR STRAIGHT RUNS OF RAIL. ANCHOR CABLE MAY HAVE ANGLE POINT AT ANCHOR PLATE IS GUARD RAIL IS CURVED.
2. ANCHOR ROD HOOKS TO BE IN CONTACT WITH ANCHOR REINFORCEMENT WHEN CONCRETE IS PLACED. WIRE TIES MAY BE USED TO POSITION ANCHOR RODS.
3. CABLE CLIP CONNECTION (DETAIL A) OR CLEVIS AND BOLT CONNECTION (DETAIL B) TO BE USED WITH WOOD POST GUARD RAILING INSTALLATION. FOR STEEL POST GUARD RAIL INSTALLATIONS, CLEVIS AND BOLT CONNECTION (DETAIL B) IS TO BE USED. OTHER ALTERNATIVES FOR ATTACHING CABLE TO ANCHOR ROD MUST BE APPROVED BY THE ENGINEER.
4. FOR TRAILING END ANCHOR CONCEPT, REFER TO PLAN VIEW SHOWN ON SHEETS R-8.1.2 AND R-8.3.1.
5. CONCRETE SHALL BE CLASS A OR AA.
6. THE TRAILING END ANCHOR SHALL BE INSTALLED OUTSIDE THE CLEAR ZONE FOR OPPOSING TRAFFIC.
7. CABLE SHALL BE RESTRAINED FROM MOVING DURING TIGHTENING.

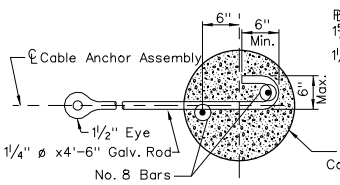

SINGLE ANCHOR

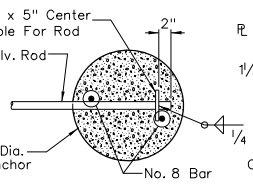

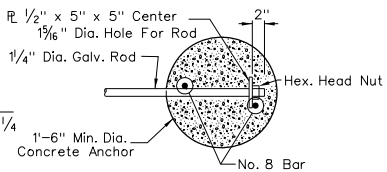

OPTIONAL ANCHOR ROD END DETAILS
Single Anchors Only

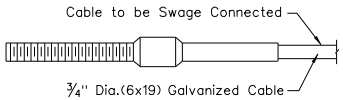

CABLE ASSEMBLY DETAILS

NEVADA DEPARTMENT OF TRANSPORTATION

TRAILING END ANCHOR

Signed Original On File	R-8.2.2	(618)
CHIEF ROAD DESIGN ENGR.	ADOPTED 7/96	REVISION 6/04

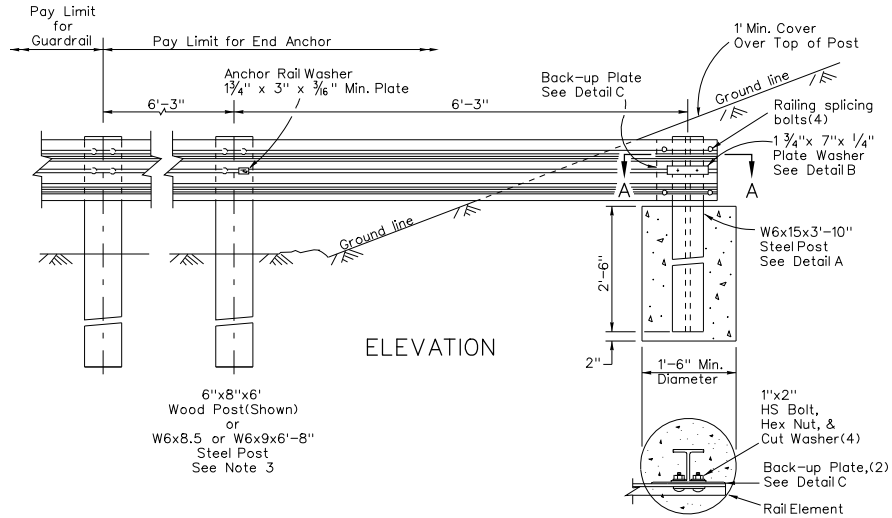

ELEVATION

W-BEAM INSTALLATION

SECTION A-A

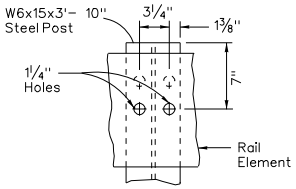

DETAIL A

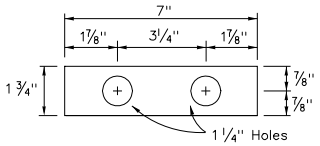

DETAIL B

¼" Plate Washer

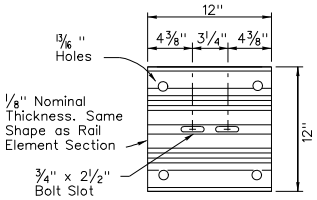

DETAIL C

Back-up Plate, For Use Between Guard Rail and Steel Post

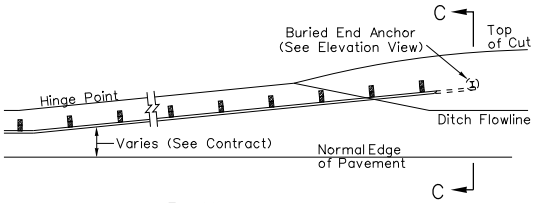

PLAN

THRIE BEAM INSTALLATION

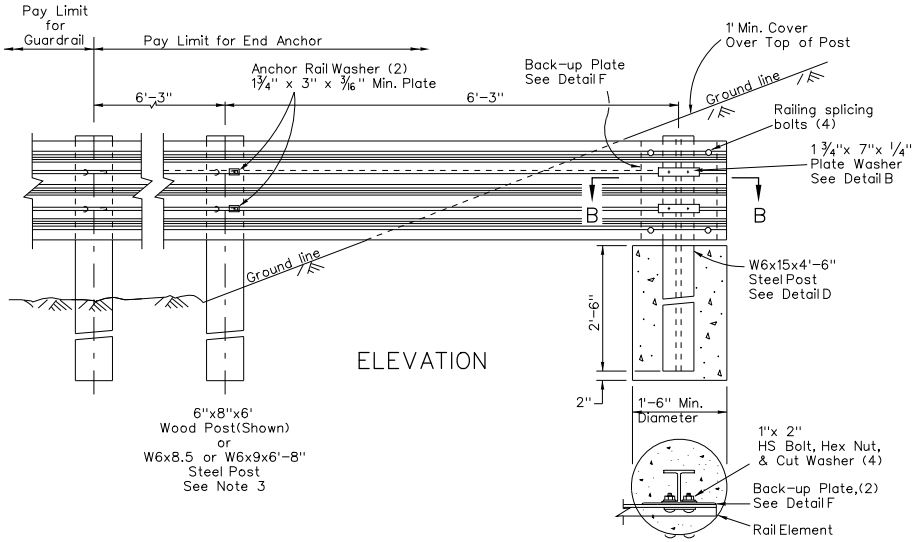

ELEVATION

SECTION B-B

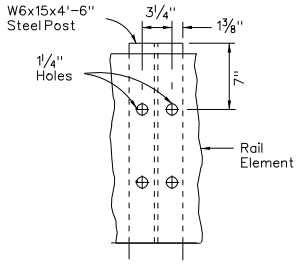

DETAIL D

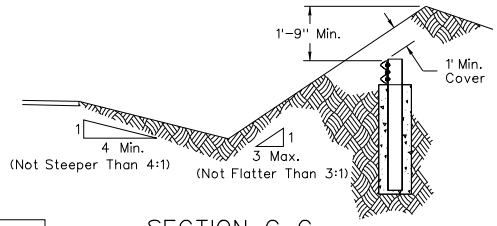

SECTION C-C

W-Beam Shown

NOTES:

1. CONCRETE SHALL BE CLASS A OR AA.
2. ALL HARDWARE TO BE GALVANIZED.
3. FOR GUARDRAIL DETAILS NOT SHOWN, REFER TO SHEET R-8.5.1(W-BEAM) OR R-8.4.1, R-8.4.1.1(THRIE BEAM).
4. BACKFILL ACCORDING TO SECTION 207.

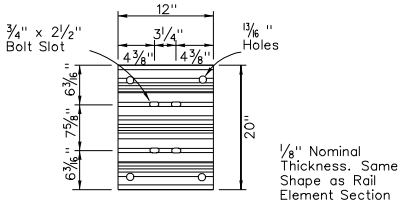

DETAIL F

Back-up Plate, For Use Between Guard Rail and Steel Post

NEVADA DEPARTMENT OF TRANSPORTATION

BURIED END ANCHOR
W-BEAM & THRIE BEAM

Signed Original On File	R-8.2.3	(618)
CHIEF ROAD DESIGN ENGR.	ADOPTED 1/05	REVISION

Table A			
Radius	Number of CRT Posts	Clear Area	
		L	W
8'- 6"	3	25'	15'
17'	6	30'	15'
25'- 6"	8	40'	20'
35'	11	50'	20'

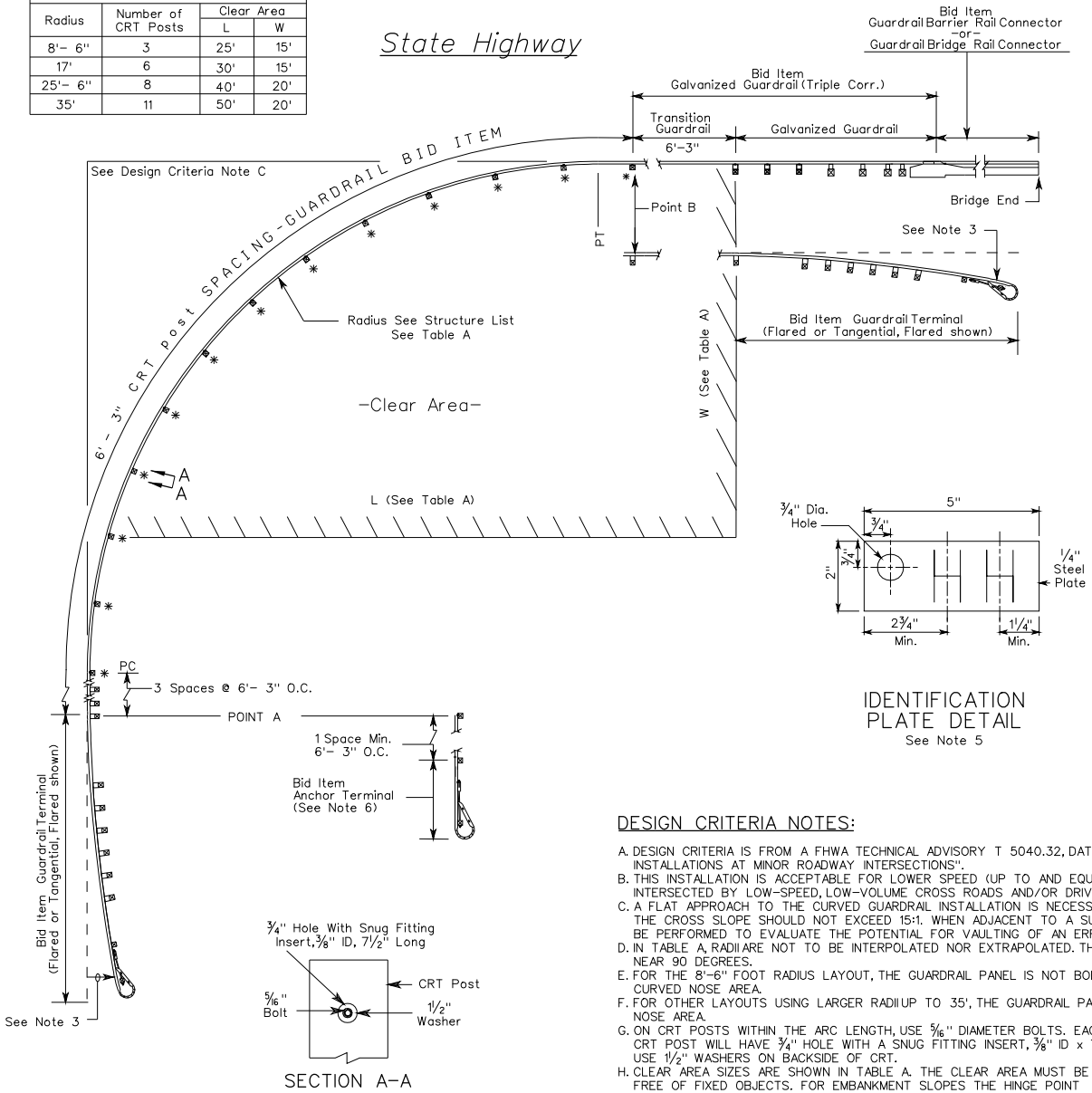

NOTES:

1. USE OF THIS DETAIL REQUIRES CHIEF ROADWAY DESIGN ENGINEER APPROVAL. THIS INSTALLATION IS INTENDED FOR THE LEADING SIDE TO A BRIDGE END , ESPECIALLY WHERE INADEQUATE ROOM IS AVAILABLE TO INSTALL OTHER STANDARD INSTALLATIONS OF GUARDRAIL-BRIDGE RAIL CONNECTORS, GUARDRAIL AND GUARDRAIL TERMINALS (FLARED) OR GUARDRAIL TERMINAL (TANGENTIAL) DUE TO A NEARBY CROSSROAD OR APPROACH.
2. SEE CONTRACT STRUCTURE LIST AND STANDARD PLANS FOR TRANSITION AND TERMINAL CONNECTOR TYPE.
3. THE SLOPE FROM THE EDGE OF THE SHOULDER INTO THE FACE OF THE GUARDRAIL SHOULD BE 10:1 OR FLATTER. SEE SHEET R-8.2.1.
4. GUARDRAIL INSTALLATION SHALL BE W-BEAM GUARDRAIL WITH BREAKAWAY CRT POSTS AND WITHOUT BLOCKS. CRT(CONTROLLED RELEASE TERMINAL) TIMBER POSTS ARE SHOWN AS ITEM "PDE09" IN THE AASHTO-AGC-ARTBA JOINT COMMITTEE TASK FORCE 13 REPORT "A GUIDE TO STANDARDIZED HIGHWAY BARRIER HARDWARE:.
5. RADIUS IN FEET SHALL BE ETCHED INTO PLATE REPLACING THE LETTERS "HH" SHOWN ON THE IDENTIFICATION PLATE DETAIL. DIGITS SHALL BE 1 1/2" MINIMUM HEIGHT AND 3/4" MAXIMUM WIDTH. PLATE SHALL BE GALVANIZED AFTER ETCHING.

   THE GUARDRAIL IDENTIFICATION PLATE SHALL BE MOUNTED AT THE LOWER SPLICE BOLT ON THE BACK SIDE OF THE RAIL ELEMENT AT THE PC OF THE GUARDRAIL RADIUS.
6. ANCHOR TERMINAL TO BE USED ONLY WHEN THERE IS NOT ENOUGH ROOM TO ACCOMMODATE AN NCHRP REPORT 350 TERMINAL.

LEGEND:

- Clear Area
- CRT Posts, No Blocks, See Note 4.

DESIGN CRITERIA NOTES:

A. DESIGN CRITERIA IS FROM A FHWA TECHNICAL ADVISORY T 5040.32, DATED APRIL 13, 1992 CALLED "CURVED W-BEAM GUARDRAIL INSTALLATIONS AT MINOR ROADWAY INTERSECTIONS".
B. THIS INSTALLATION IS ACCEPTABLE FOR LOWER SPEED (UP TO AND EQUAL TO 50 mph), LOW-VOLUME THROUGH ROADWAYS INTERSECTED BY LOW-SPEED, LOW-VOLUME CROSS ROADS AND/OR DRIVEWAYS.
C. A FLAT APPROACH TO THE CURVED GUARDRAIL INSTALLATION IS NECESSARY TO ENSURE PROPER PERFORMANCE OF THE SYSTEM. THE CROSS SLOPE SHOULD NOT EXCEED 15:1. WHEN ADJACENT TO A SUPERELEVATED SECTION ON THE MAINLINE, AN ANALYSIS SHOULD BE PERFORMED TO EVALUATE THE POTENTIAL FOR VAULTING OF AN ERRANT VEHICLE.
D. IN TABLE A, RADII ARE NOT TO BE INTERPOLATED NOR EXTRAPOLATED. THIS INSTALLATION IS BASED ON INTERSECTION ANGLES NEAR 90 DEGREES.
E. FOR THE 8'-6" FOOT RADIUS LAYOUT, THE GUARDRAIL PANEL IS NOT BOLTED TO THE ONE CRT POST AT THE CENTER OF THE CURVED NOSE AREA.
F. FOR OTHER LAYOUTS USING LARGER RADII UP TO 35', THE GUARDRAIL PANEL IS BOLTED TO THE CRT POSTS IN THE CURVED NOSE AREA.
G. ON CRT POSTS WITHIN THE ARC LENGTH, USE 5/16" DIAMETER BOLTS. EACH CRT POST WILL HAVE 3/4" HOLE WITH A SNUG FITTING INSERT, 3/8" ID x 7 1/2" LONG. USE 1 1/2" WASHERS ON BACKSIDE OF CRT.
H. CLEAR AREA SIZES ARE SHOWN IN TABLE A. THE CLEAR AREA MUST BE KEPT FREE OF FIXED OBJECTS. FOR EMBANKMENT SLOPES THE HINGE POINT SHOULD BE GREATER THAN 2' BEHIND THE BACK OF POSTS. EMBANKMENT SLOPES WILL BE FLATTER THAN OR EQUAL TO A 2:1 MAXIMUM. THE CLEAR AREA SHOULD BE KEPT FREE OF PEDESTRIAN WALKWAYS.
I. USE THE ANCHOR TERMINAL WITH LOW-SPEED, LOW-VOLUME FACILITIES WITH A STOP CONDITION ON CROSS ROAD OR APPROACH.

NEVADA DEPARTMENT OF TRANSPORTATION

SPECIAL GUARDRAIL INSTALLATION CRT

Signed Original On File	R-8.2.4	(618)
CHIEF ROAD DESIGN ENGR.	ADOPTED 1/01	REVISION 2/02

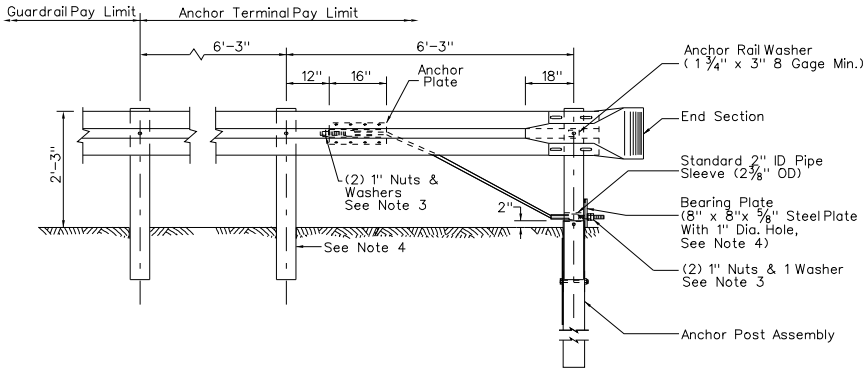

W-BEAM INSTALLATION

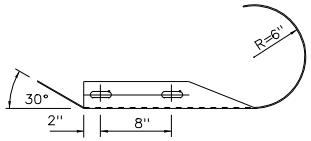

PLAN

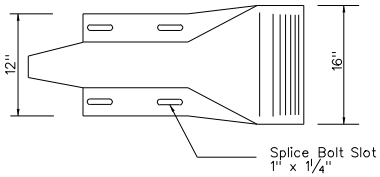

ELEVATION

W-BEAM
END SECTION

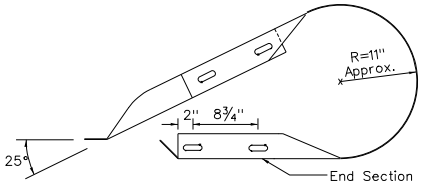

PLAN

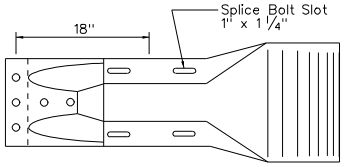

ELEVATION

THRIE
END SECTION

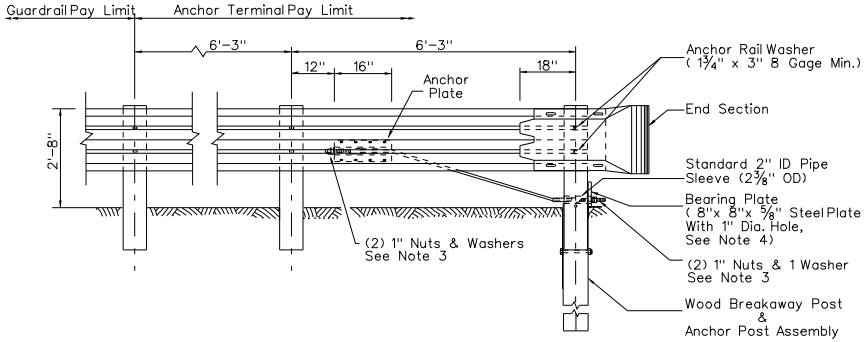

THRIE BEAM INSTALLATION

NOTES:

1. USE OF THIS DETAIL REQUIRES CHIEF ROADWAY DESIGN ENGINEER APPROVAL.
2. TO BE USED ONLY WITH SPECIAL GUARDRAIL INSTALLATION. SEE SHEET R-8.2.4.
3. OUTSIDE NUT SHALL BE TORQUED AGAINST INSIDE NUT A MINIMUM OF 100 ft-lbs.
4. TOENAIL PLATE AT CORNERS WITH 10D NAILS.

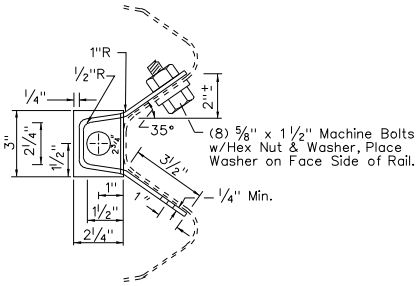

SECTION B-B

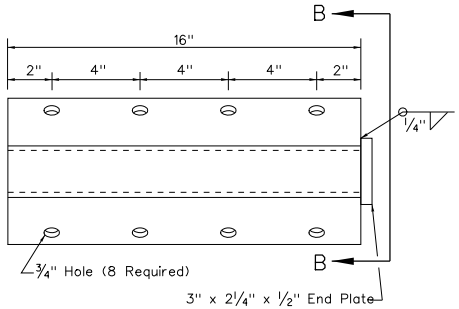

ANCHOR PLATE - ELEVATION

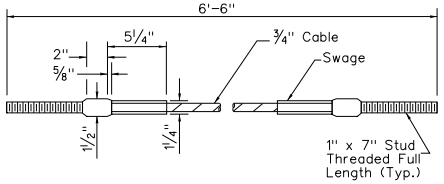

ANCHOR CABLE

NEVADA DEPARTMENT OF TRANSPORTATION

ANCHOR TERMINAL

Signed Original On File	R-8.2.4.1	(618)
CHIEF ROAD DESIGN ENGR.	ADOPTED 1/01	REVISION 1/05

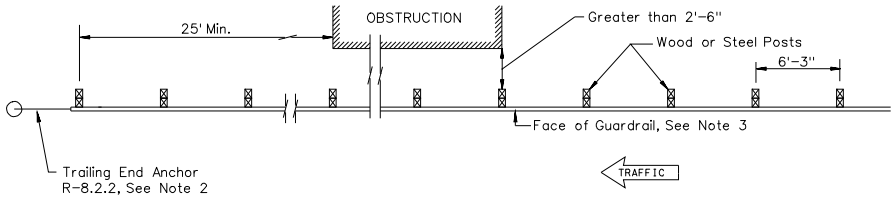

METHOD 1
Standard Installation

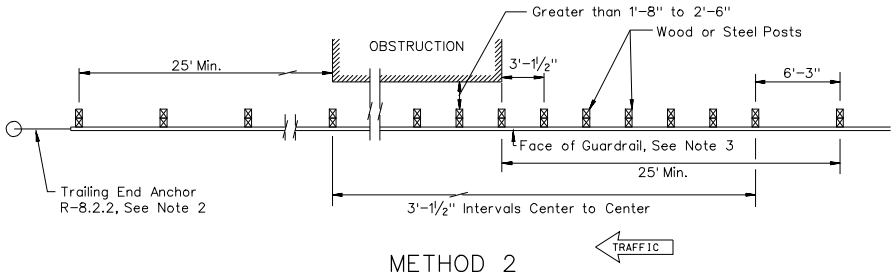

METHOD 2

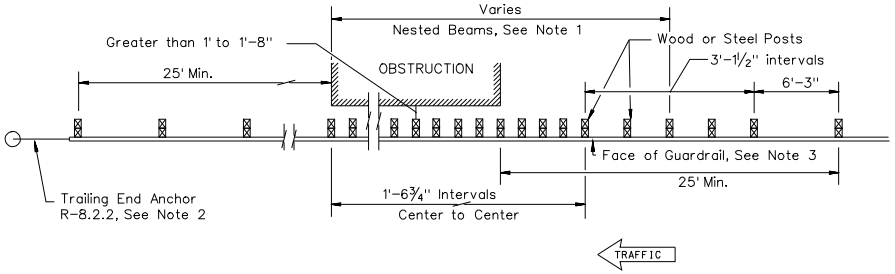

METHOD 3
See Note 5

NOTES:

1. USE NESTED THRIE BEAM, SEE DETAIL N SHEET R-8.1.1.
2. AN APPROVED GUARDRAIL TERMINAL SHALL BE USED IF THE ONE-WAY FACILITY IS TO BE USED AS A TWO WAY DETOUR. THE TERMINAL SHOULD BE LEFT IN PLACE ONCE THE DETOUR IS REMOVED.
3. FOR DETAILS OF TRIPLE CORRUGATION GUARDRAIL SEE SHEET R-8.4.1.
4. FOR INFORMATION NOT SHOWN REFER TO THE MOST CURRENT ADOPTED AASHTO ROADSIDE DESIGN GUIDE.
5. IF GUARDRAIL SYSTEM IS NOT SATISFACTORY, USE CONCRETE BARRIER RAIL. CHECK FOR VEHICLE ROLL ANGLE (TOP OF TALLER VEHICLES HITTING THE OBSTRUCTIONS).
6. SPACER MATERIAL MAY BE I-BEAM, WOOD BLOCK, OR FORMED STRUCTURAL TUBING BY PRIOR APPROVAL OF THE ENGINEER. FOR DETAILS OF A SPACER BLOCK SEE SHEET R-8.4.1. SHY DISTANCE CAN BE ADJUSTED UPWARD TO FIT THE SPACER BLOCK.

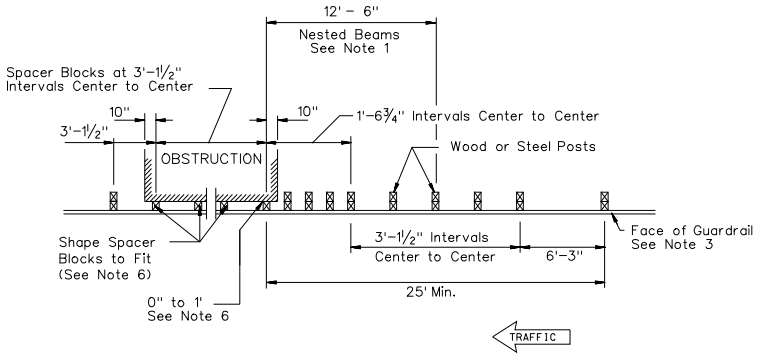

METHOD 4
See Note 5

NEVADA DEPARTMENT OF TRANSPORTATION

GUARDRAIL INSTALLATION
DEFLECTIONS
AND BACK SPACING

Signed Original On File	R-8.3.1	(618)
CHIEF ROAD DESIGN ENGR.	ADOPTED 7/96	REVISION 8/98

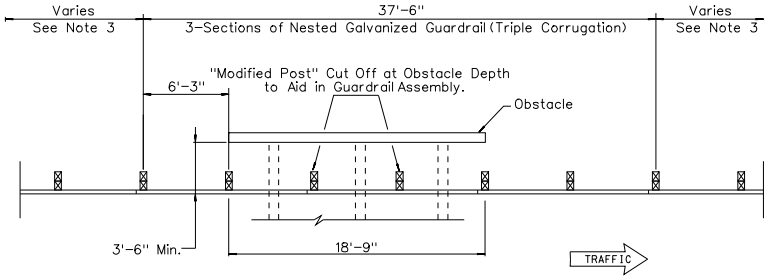

PLAN

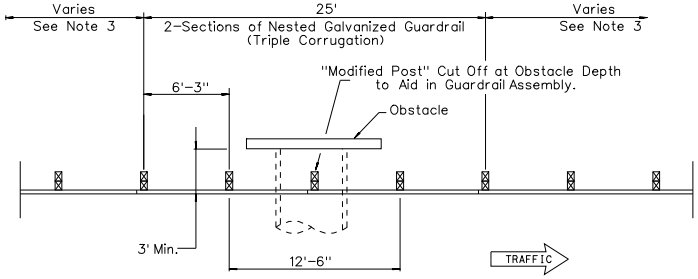

PLAN

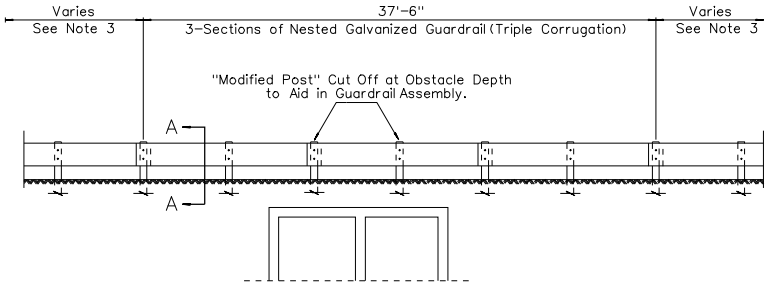

ELEVATION

TYPE 2
(2 Posts Modified)

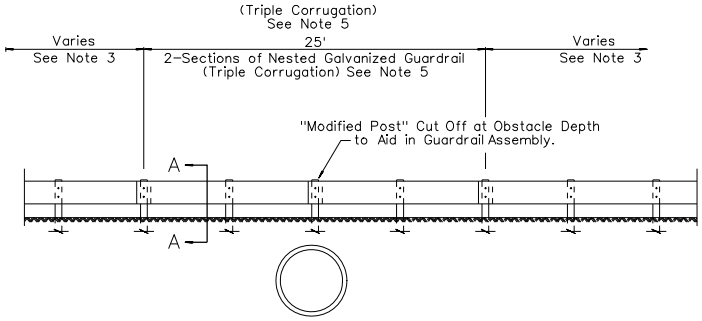

ELEVATION

TYPE 1
(1 Post Modified)

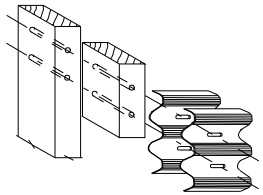

SECTION A-A
NESTED BEAMS

NOTES:

1. THESE DETAILS ARE TO BE USED ONLY WHEN GUARDRAIL POST CANNOT BE INSTALLED TO AVOID UNDERGROUND OBSTRUCTIONS WITH GUARDRAIL POSTS.
2. SEE SHEET R-8.4.1 FOR DETAIL ON GALVANIZED GUARDRAIL (TRIPLE CORRUGATION) NOT SHOWN.
3. GUARDRAIL LENGTHS OF NEED SHALL BE BASED ON DESIGN YEAR TRAFFIC VOLUMES-SEE CURRENT EDITION OF THE AASHTO ROADSIDE DESIGN GUIDE FOR DETAILS.
4. CHECK FEASIBILITY OF REMOVING OBSTACLE OR EXTENDING CULVERT OUTSIDE CLEAR ZONE VERSUS COST OF REMOVAL.
5. IF THE GUARDRAIL SPLICE OCCURS ON THE POSTS WHICH ARE ADJACENT TO THE MODIFIED POST THEN THREE CONTIGUOUS SECTIONS (37'-6") OF NESTED GUARDRAIL ARE REQUIRED, WITH THE MIDDLE SECTION BEING CENTERED AT THE LOCATION OF THE MODIFIED POST.

NEVADA DEPARTMENT OF TRANSPORTATION

GUARDRAIL INSTALLATION
MODIFIED POST

Signed Original On File	R-8.3.2	(618)
CHIEF ROAD DESIGN ENGR.	ADOPTED 7/96	REVISION 10/02

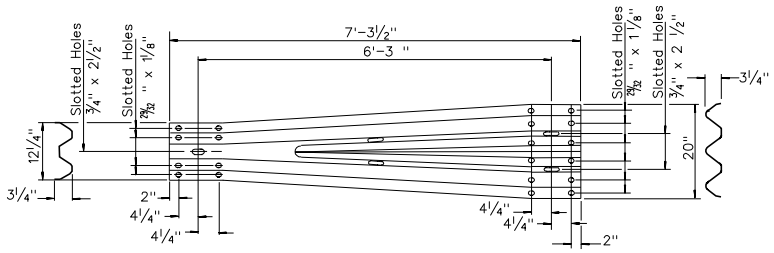

TRANSITION SECTION

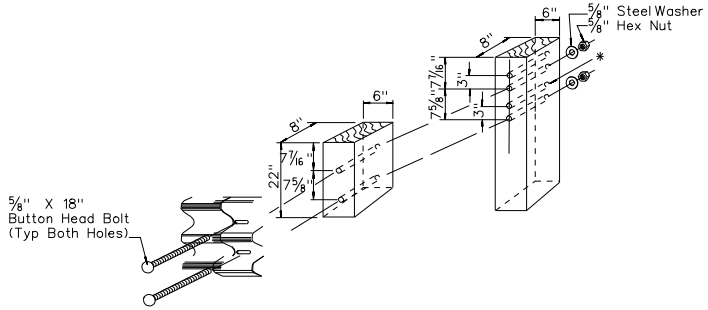

BLOCK/POST DETAIL

All Holes To Be 13/16" Dia.

PLAN VIEW

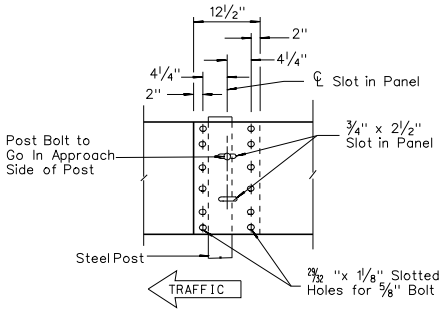

RAIL SPLICE

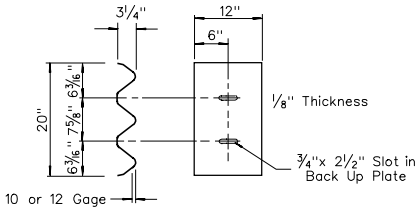

BACK-UP PLATE

(For Use Between Guardrail and Steel Block at Posts Between Rail Splices)

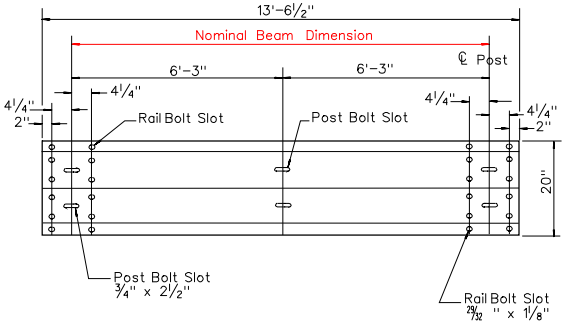

FRONT ELEVATION

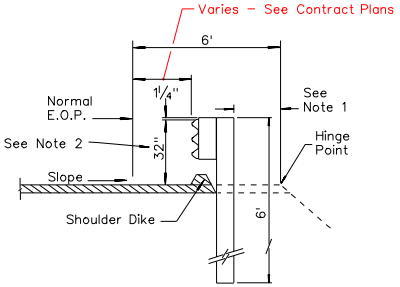

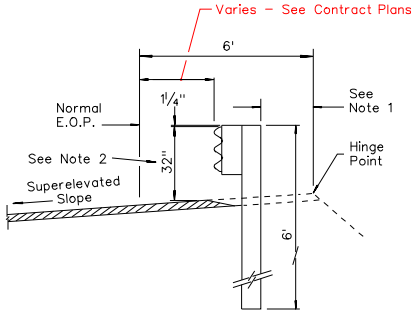

TYPICAL GUARDRAIL INSTALLATIONS

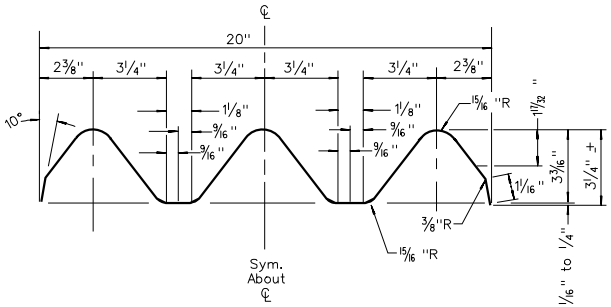

SECTION THROUGH RAIL ELEMENT

NOTES:

1. WHEN DISTANCE BETWEEN BACK OF GUARDRAIL POST AND HINGE POINT IS LESS THAN 2', THE POST SHALL BE LENGTHENED 1' MINIMUM.
2. GUARDRAIL HEIGHTS ON STAGE CONSTRUCTION PROJECTS SHALL BE GOVERNED BY FINAL SURFACING ELEVATIONS. HEIGHT MEASURED AT FACE OF RAIL ELEMENT.
3. ALL HARDWARE TO BE GALVANIZED.

LEGEND:

✳ AUXILIARY HOLE TO BE USED WHEN ROADWAY SURFACE TO RAIL BOTTOM IS LESS THAN 10"

NEVADA DEPARTMENT OF TRANSPORTATION

GALVANIZED GUARDRAIL (TRIPLE CORRUGATION) WOOD POST

Signed Original On File	R-8.4.1		(618)
CHIEF ROAD DESIGN ENGR.	ADOPTED 11/86	REVISION 5/09	

R-101

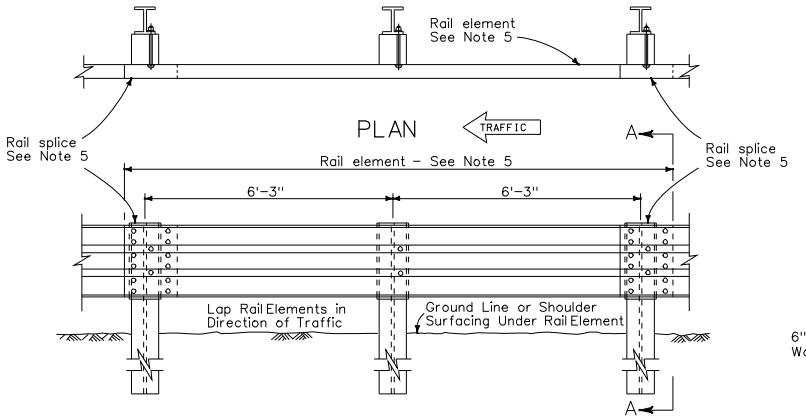

ELEVATION
SINGLE THRIE BEAM BARRIER

SECTION A–A
STEEL POST BOLT HARDWARE
AND WOOD BLOCK DETAIL

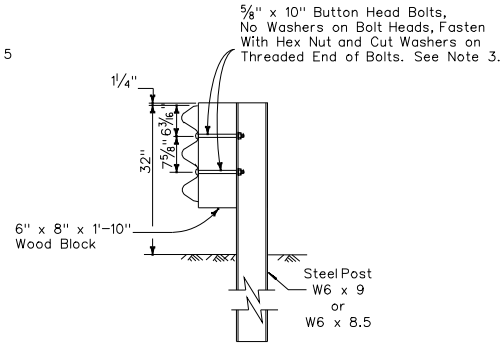

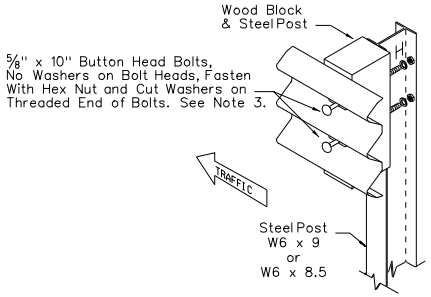

STEEL POST
ASSEMBLY

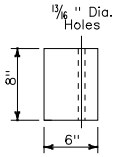

TOP

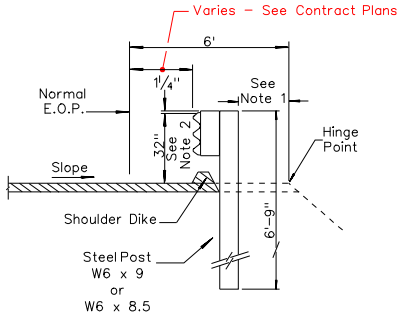

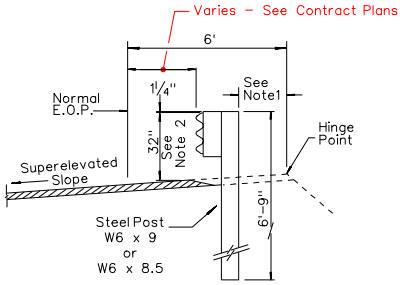

TYPICAL GUARDRAIL INSTALLATIONS

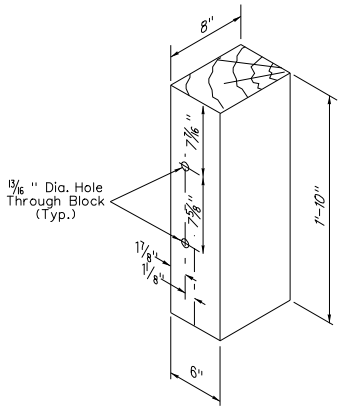

WOOD BLOCK
FOR STEEL POST

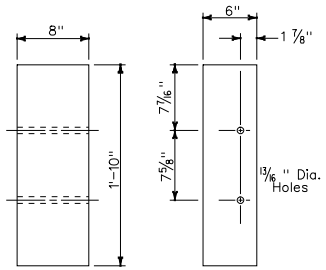

SIDE FRONT

6" x 8" x 1'-10"
WOOD BLOCK

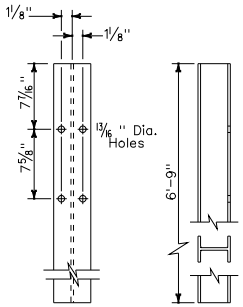

FRONT SIDE

STEEL POST
W6x 9 or W6 x 8.5

NOTES:

1. WHEN DISTANCE BETWEEN BACK OF GUARDRAIL POST AND HINGE POINT IS LESS THAN 2', THE POST SHALL BE LENGTHENED 1' MINIMUM.
2. GUARDRAIL HEIGHTS ON STAGE CONSTRUCTION PROJECTS SHALL BE GOVERNED BY FINAL SURFACING ELEVATIONS. HEIGHT MEASURED AT FACE OF RAIL ELEMENT.
3. ATTACH GUARDRAIL TO WOOD BLOCK AND STEEL POST WITH TWO BOLTS ON APPROACHING TRAFFIC SIDE OF BLOCK AND POST WEB.
4. TOP OF GUARDRAIL TO BE 32" ABOVE GROUND LINE OR SHOULDER SURFACING.
5. FOR DETAILS OF THE CROSS SECTION OF THRIE BEAM, RAIL ELEMENT, RAIL SPLICE, TRANSITION SECTION, AND BACKUP PLATE, SEE SHEET R-8.4.1.
6. ALL HARDWARE TO BE GALVANIZED.

NEVADA DEPARTMENT OF TRANSPORTATION

GALVANIZED GUARDRAIL
(TRIPLE CORRUGATION)
STEEL POST

Signed Original On File	R-8.4.1.1		(618)
CHIEF ROAD DESIGN ENGR.	ADOPTED 7/96	REVISION 6/09	

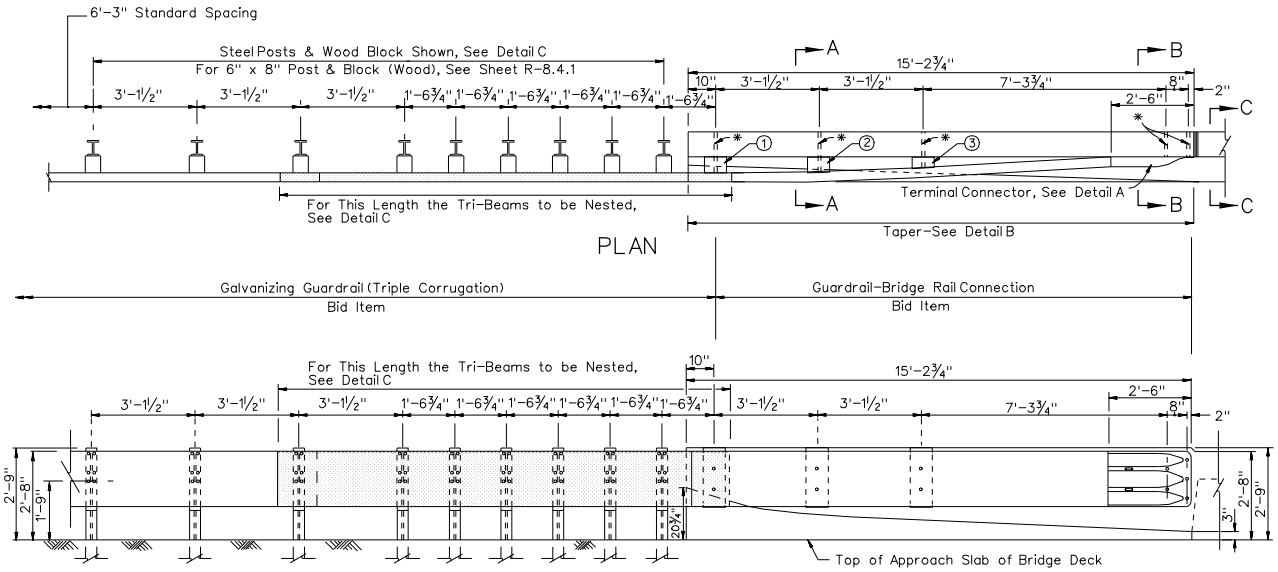

DETAIL C
STEEL POST AND WOOD BLOCK ASSEMBLY
(Nested Tri-Beam Shown)

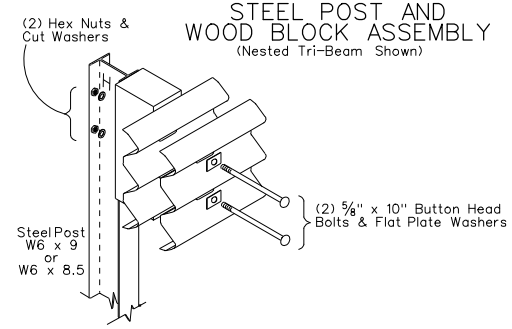

Attach Tri-Beam on Approaching Traffic Side of Block and Post Web. NDOT Approved Composite Material Spacer Block May Be Substituted. See Sheet R-8.4.1.1. for Details not shown. For Wood Post/Block Details, See Sheet R-8.4.1.

LEGEND:

* 1⅛" DIA. CORE DRILLED HOLES FOR ⅞" DIA. GALVANIZED HIGH STRENGTH HEX BOLTS & NUTS WITH 3" x ¼" SQUARE GALVANIZED STEEL WASHER WITH 1" DIA. HOLE.

SPACER BLOCK TABLE				
SPACER BLOCK	A	B	C	D
①	4"	2¼"	2¼"	4"
②	3½"	1¼"	1¼"	3⅛"
③	2⅛"	¾"	¾"	2⅛"

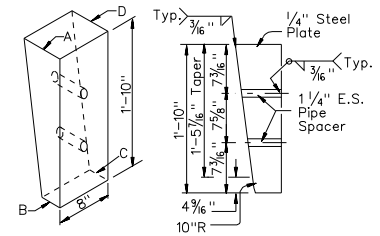

ISOMETRIC SIDE VIEW

SPACER BLOCKS 2 AND 3 DETAIL

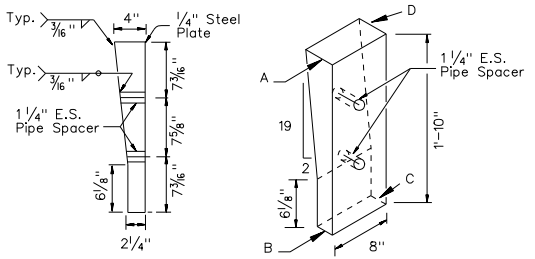

SIDE VIEW ISOMETRIC

SPACER BLOCK 1 DETAIL

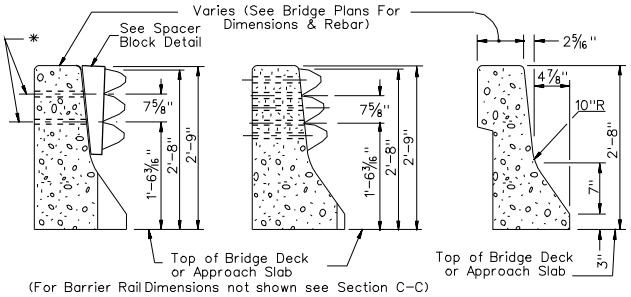

SECTION A-A SECTION B-B SECTION C-C

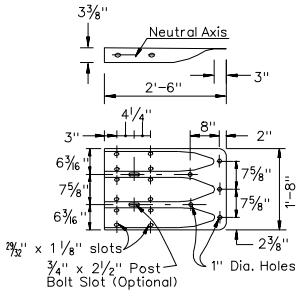

DETAIL A

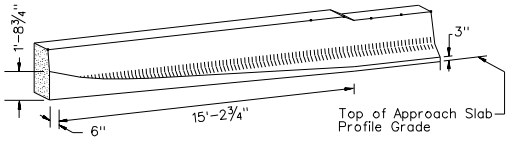

DETAIL B

Method of Tapering Bridge Rail For Guardrail Connections

NEVADA DEPARTMENT OF TRANSPORTATION

GUARDRAIL-BRIDGE RAIL CONNECTION (TRIPLE CORRUGATION)

Signed Original On File	R-8.4.2	(618)
CHIEF ROAD DESIGN ENGR.	ADOPTED 7/96	REVISION 9/06

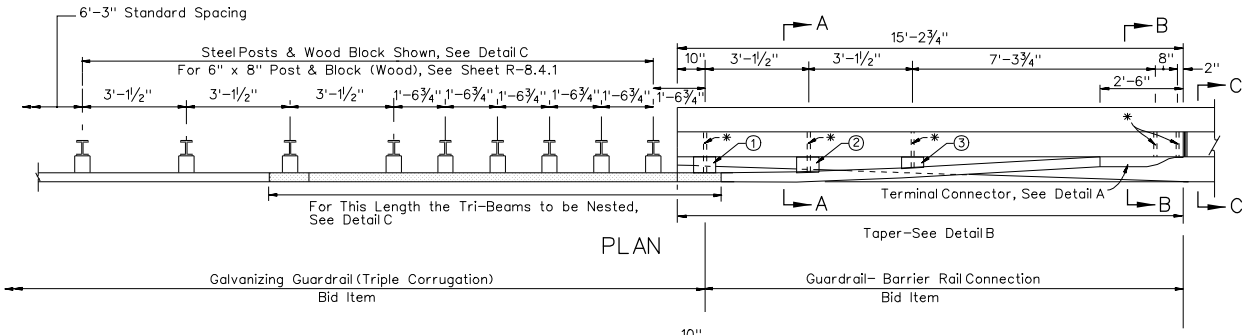

PLAN

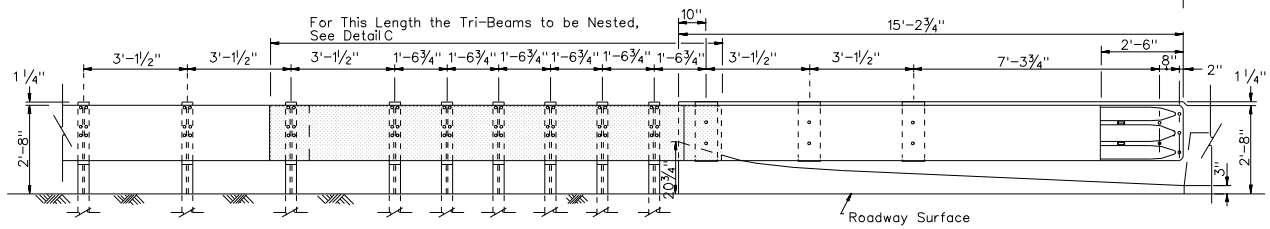

ELEVATION

DETAIL C
STEEL POST AND WOOD BLOCK ASSEMBLY
(Nested Tri-Beam Shown)

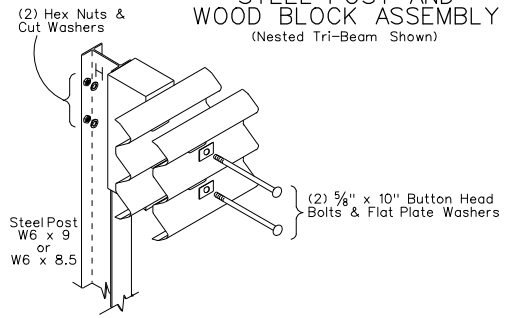

Attach Tri-Beam on Approaching Traffic Side of Block and Post Web. NDOT Approved Composite Material Spacer Block May Be Substituted. See Sheet R-8.4.1.1. for Details not shown. For Wood Post/Block Details, See Sheet R-8.4.1.

LEGEND:

* 1⅛" DIA. CORE DRILLED HOLES FOR ⅞" DIA. GALVANIZED HIGH STRENGTH HEX BOLTS & NUTS WITH 3"x ¼" SQUARE GALVANIZED STEEL WASHER WITH 1" DIA. HOLE.

** DENSE GRADED OR PROFILE GRADE

SPACER BLOCK TABLE				
SPACER BLOCK	A	B	C	D
①	4"	2¼"	2¼"	4"
②	3½"	1¼"	1¼"	3⅛"
③	2⅛"	¾"	¾"	2⅛"

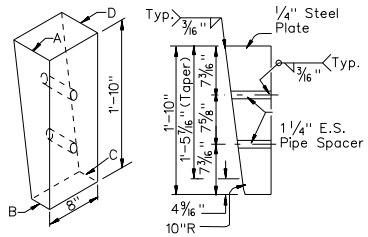

ISOMETRIC SIDE VIEW

SPACER BLOCKS 2 AND 3 DETAIL

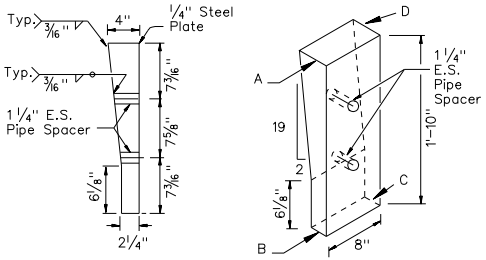

SIDE VIEW ISOMETRIC

SPACER BLOCK 1 DETAIL

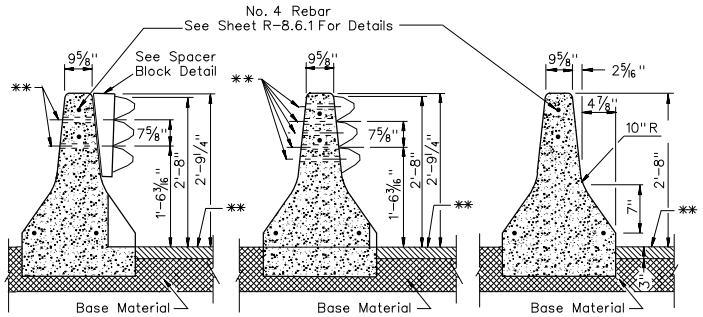

SECTION A-A SECTION B-B SECTION C-C

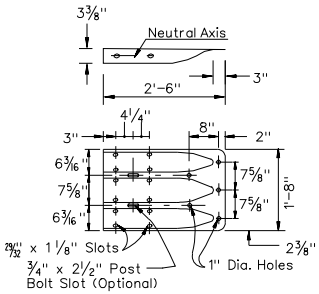

DETAIL A

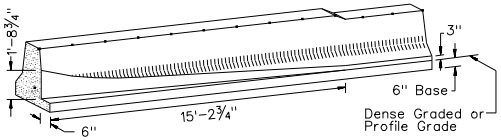

DETAIL B

Method of Tapering Barrier Rail For Guardrail Connections

NEVADA DEPARTMENT OF TRANSPORTATION

GUARDRAIL-BARRIER RAIL CONNECTION (TRIPLE CORRUGATION)

Signed Original On File	R-8.4.3	(618)
CHIEF ROAD DESIGN ENGR.	ADOPTED 7/96	REVISION 9/06

R-104

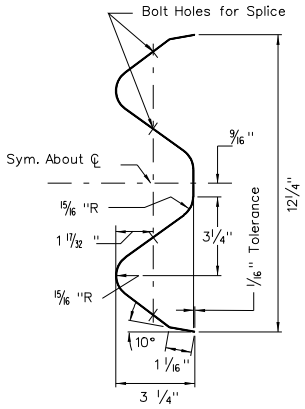

SECTION THRU RAIL ELEMENT

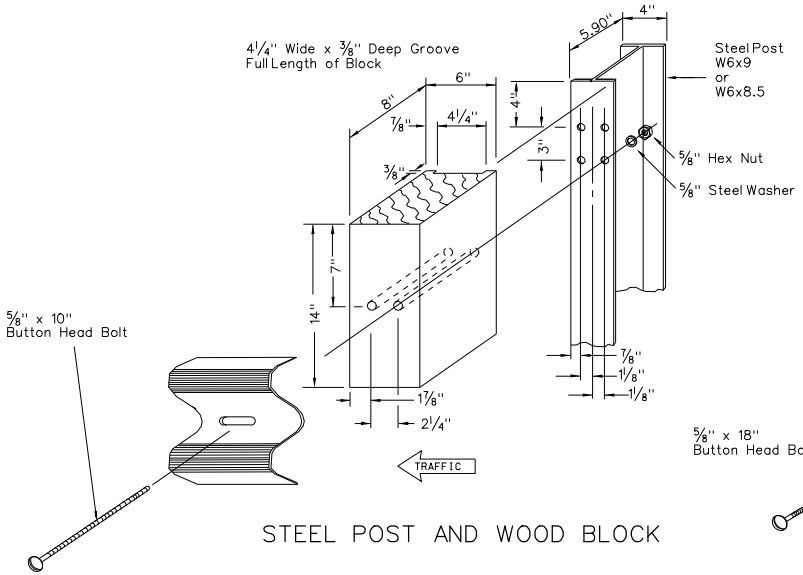

STEEL POST AND WOOD BLOCK

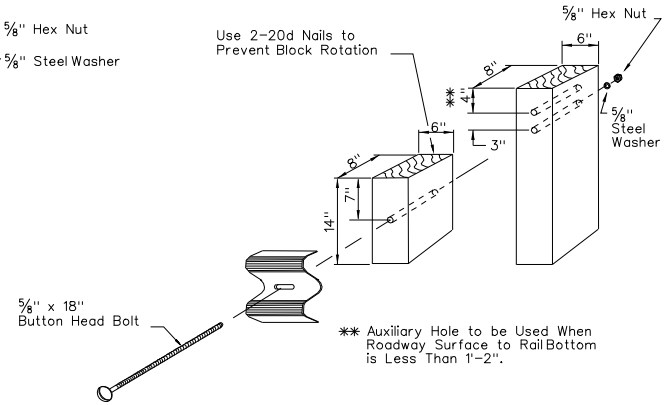

WOOD POST & BLOCK

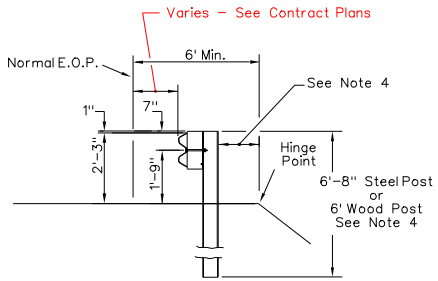

TYPICAL GUARD RAIL INSTALLATION

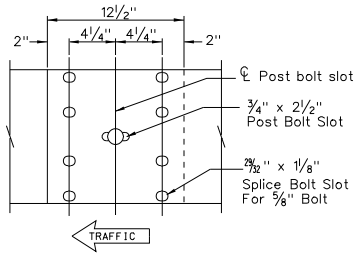

RAIL SPLICE

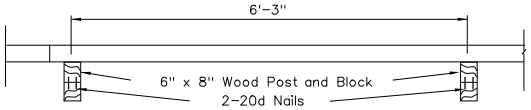

PLAN
WOOD POST AND BLOCK

NOTES:

1. ALL HOLES 3/4" DIA.
2. FOR METAL POSTS - RAIL MOUNTS TO BLOCK WITH BOLT ON APPROACHING TRAFFIC SIDE OF BLOCK AND POST WEB.
3. ON RETROFIT INSTALLATIONS WHEN DISTANCE BETWEEN BACK OF GUARDRAIL POST AND HINGE POINT IS LESS THAN 2', THE POST SHALL BE LENGTHENED 1' MIN.
4. GUARDRAIL HEIGHTS ON STAGED CONSTRUCTIONS PROJECTS SHALL BE GOVERNED BY FINAL SURFACING ELEVATIONS.

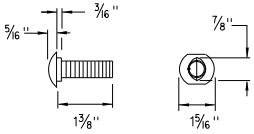

5/8" SPLICE BOLT

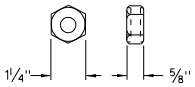

5/8" RECESSED NUT

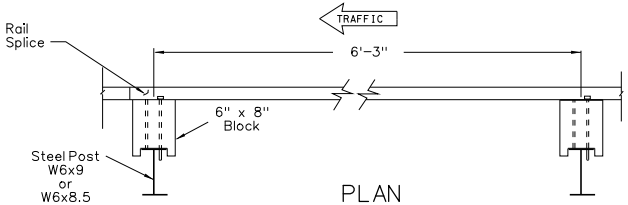

PLAN
METAL POST AND WOOD BLOCK

NEVADA DEPARTMENT OF TRANSPORTATION

GALVANIZED GUARDRAIL
("W" BEAM)

Signed Original On File	R-8.5.1	(618)
CHIEF ROAD DESIGN ENGR.	ADOPTED 2/79	REVISION 6/09

R-105

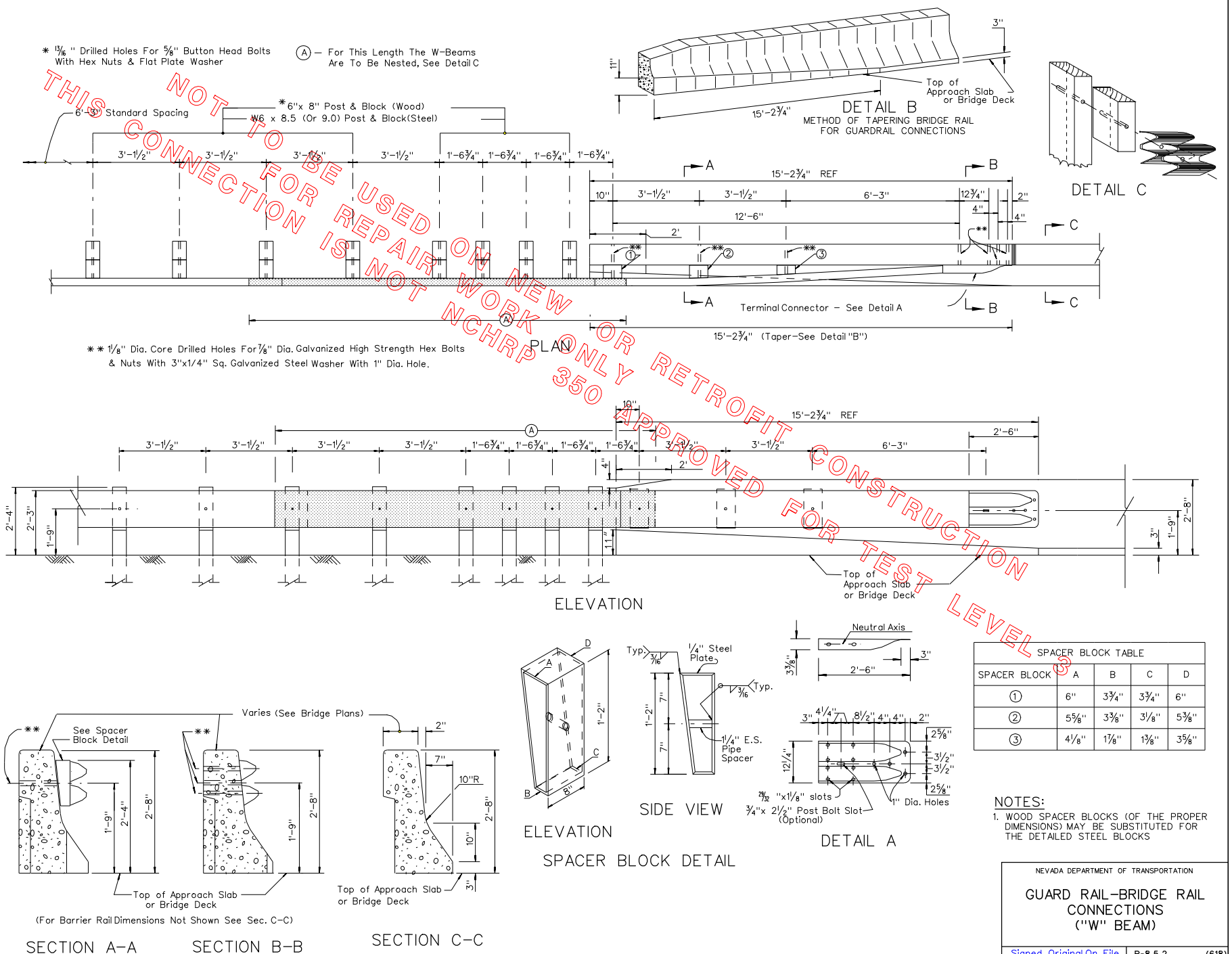

SPACER BLOCK TABLE				
SPACER BLOCK	A	B	C	D
①	6"	3¾"	3¾"	6"
②	5⅝"	3⅜"	3⅛"	5⅜"
③	4⅛"	1⅞"	1⅜"	3⅝"

NOTES:

1. WOOD SPACER BLOCKS (OF THE PROPER DIMENSIONS) MAY BE SUBSTITUTED FOR THE DETAILED STEEL BLOCKS

NOT TO BE USED ON NEW WORK OR RETROFIT CONSTRUCTION
FOR REPAIR WORK ONLY
THIS CONNECTION IS NOT NCHRP 350 APPROVED FOR TEST LEVEL 3

NEVADA DEPARTMENT OF TRANSPORTATION

GUARD RAIL-BRIDGE RAIL CONNECTIONS ("W" BEAM)

Signed Original On File — CHIEF ROAD DESIGN ENGR.

R-8.5.2 (618)

ADOPTED 11/86 REVISION 10/98

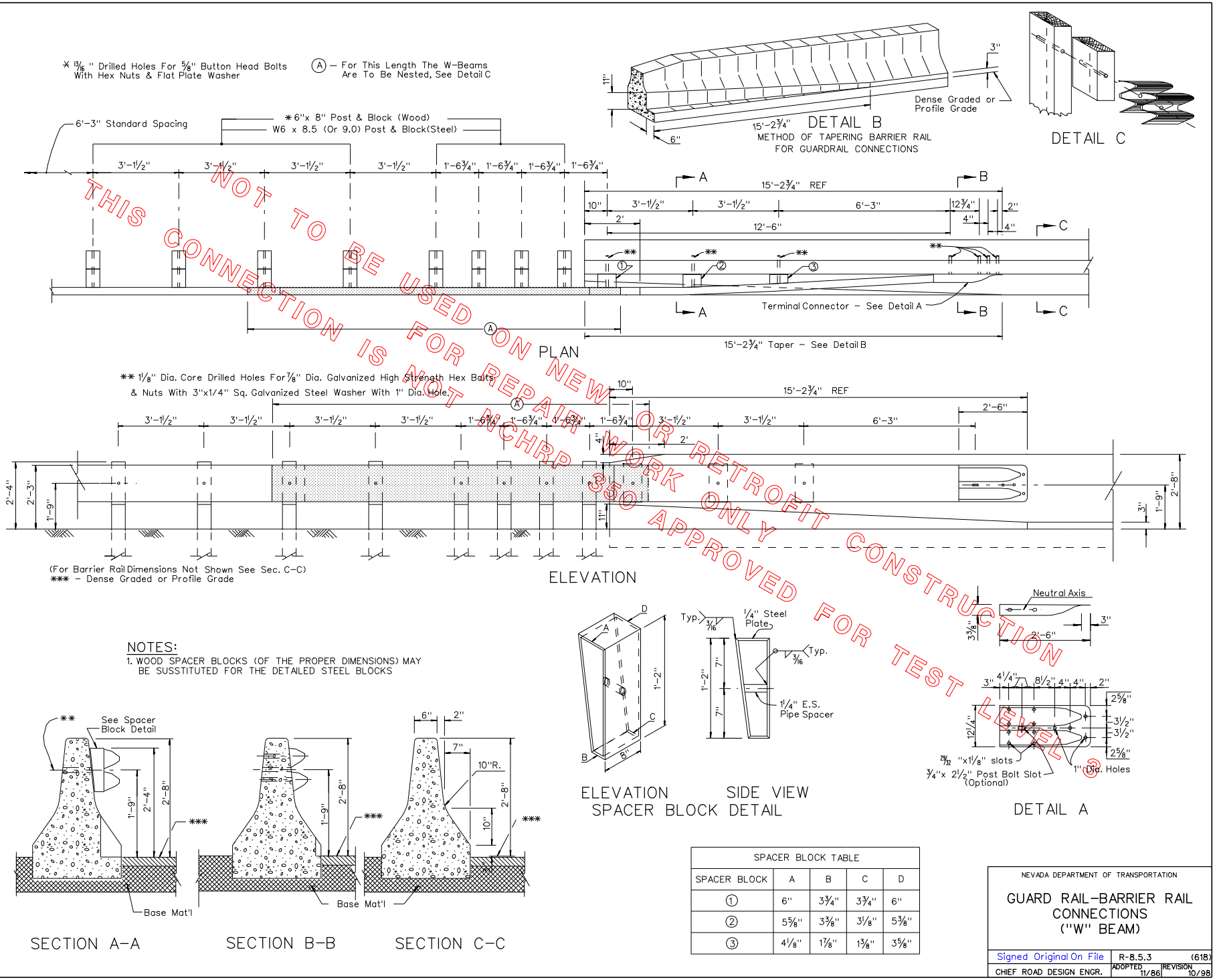

SPACER BLOCK TABLE				
SPACER BLOCK	A	B	C	D
①	6"	3¾"	3¾"	6"
②	5⅝"	3⅜"	3⅛"	5⅜"
③	4⅛"	1⅞"	1⅜"	3⅝"

NEVADA DEPARTMENT OF TRANSPORTATION

GUARD RAIL–BARRIER RAIL CONNECTIONS ("W" BEAM)

Signed Original On File — CHIEF ROAD DESIGN ENGR.

R-8.5.3 (618)

ADOPTED 11/86 — REVISION 10/98

R-10.7

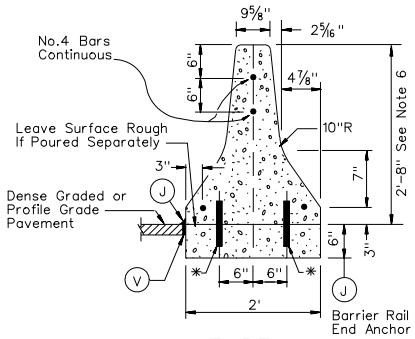

TYPE A

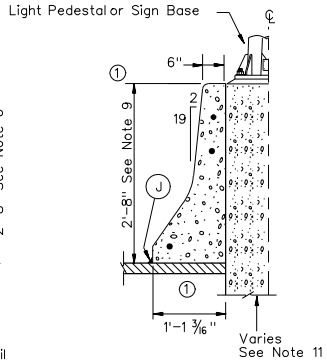

TYPE B

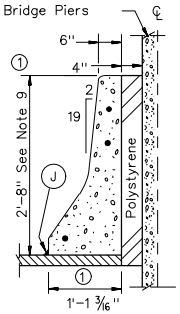

TYPE B

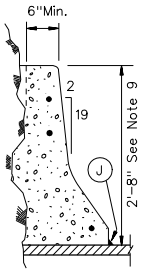

TYPE C

TYPE A
CONCRETE (INFORMATION ONLY)
0.1208 Yd.^{3} Per Ft., Without Base Slab
0.1578 Yd.^{3} Per Ft., With Base Slab

TYPE B
CONCRETE (INFORMATION ONLY)
0.0702 Yd.^{3} Per Ft.

NOTES:

1. CONCRETE SHALL BE CLASS A OR AA.
   REINFORCING STEEL: USE 4-NO.4 BARS CONTINUOUS IN TYPE A AND TYPE D, CONCRETE BARRIER RAIL. USE 3-NO.4 BARS CONTINUOUS IN TYPE B AND TYPE C, CONCRETE BARRIER RAIL.
2. EXPANSION JOINTS AT ALL STRUCTURES. JOINTS IN BARRIER RAIL OVER A STRUCTURE SHALL BE AT THE SAME LOCATION AND OF THE SAME DIMENSIONS AS THOSE IN THE STRUCTURE. JOINT FILLER NOT REQUIRED IN EXPANSION JOINT IN BARRIER RAIL.
3. BITUMINOUS PAVING REQUIREMENTS: THE BARRIER END ANCHORS SHALL BE CONSTRUCTED IN THE FIRST AND LAST 10' OF THE BARRIER RAIL RUN. AT THE CONTRACTORS OPTION, 6" CONCRETE BASE AND BARRIER RAIL MAY BE PLACED MONOLITHICALLY, IN WHICH CASE DOWELS MAY BE ELIMINATED. SEE BARRIER RAIL END ANCHOR DETAILS.

   CONCRETE PAVING REQUIREMENTS: DOWELS SHALL BE REQUIRED IN THE FIRST AND LAST 10' OF THE BARRIER RAIL RUN. THE SURFACE OF THE CONCRETE SHALL BE CLEAN PRIOR TO PLACEMENT OF THE BARRIER RAIL. AT THE CONTRACTORS OPTION, CONCRETE PAVEMENT AND BARRIER RAIL MAY BE PLACED MONOLITHICALLY, IN WHICH CASE DOWELS MAY BE ELIMINATED. SEE CONCRETE SECTION FOR DOWELS IN BARRIER RAIL END ANCHOR.
4. VERTICAL JOINTS SHALL HAVE A SINGLE COMPONENT HOT APPLIED SEALANT FULL DEPTH OF JOINT.
5. JOINT SEALER SHALL BE A SINGLE COMPONENT HOT APPLIED SEALANT 1" THICK.
6. THE HEIGHT OF THE BARRIER RAIL SHALL BE MEASURED FROM THE TOP OF THE PLANTMIX BITUMINOUS SURFACE OR THE TOP OF CONCRETE PAVEMENT.
7. FOR IMPACT ATTENUATOR ATTACHMENT DETAILS, SEE MANUFACTURER'S DRAWINGS.. FOR GUARDRAIL ENERGY ABSORBING TERMINAL ATTACHMENT, SEE SHEET R.8.1.1.
8. DEPTH OF 6" BASE SHALL BE CHECKED AND INCREASED AS NEEDED FOR FOUNDATION STABILITY. WHEN BARRIER RAIL SITS ON PAVEMENT, THE BASE CAN BE ELIMINATED. BARRIER RAIL AND ANCHORS MAY BE REQUIRED.
9. FOR DETAILS NOT SHOWN, SEE TYPE A.
10. B = 2/19 x h + 12"
11. SEE CONTRACT PLANS FOR EXACT DIMENSIONS.

LEGEND:

- (1) Dimension Used When Barrier Is Placed Against Rock Or Solid Object Such As A Retaining Wall
- (M) Pavement (See Note 3)
- (J) Joint Sealer Typical (See Note 5)
- (V) Vertical Joint Sealer Typical (See Note 4)
- ✱ 1"x 8" Steel Dowel @ 2' Centers (If Needed See Note 3)
- ● No.4 Bars Continuous

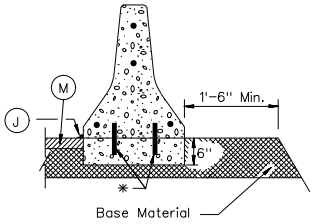

BITUMINOUS SECTION

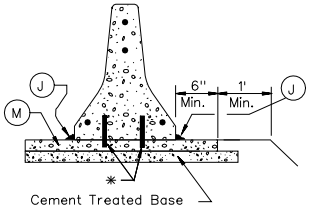

CONCRETE SECTION

BARRIER RAIL END ANCHOR DETAIL
First and Last 10'

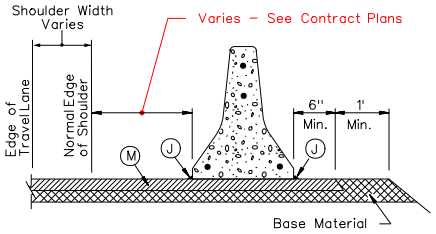

BITUMINOUS SECTION

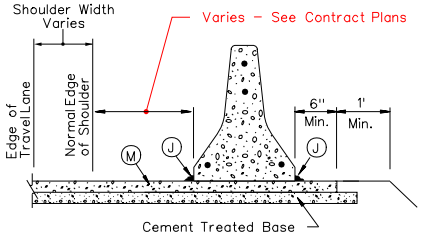

CONCRETE SECTION

NORMAL ROADWAY DETAIL
1/4" Scored Joints @ 15'

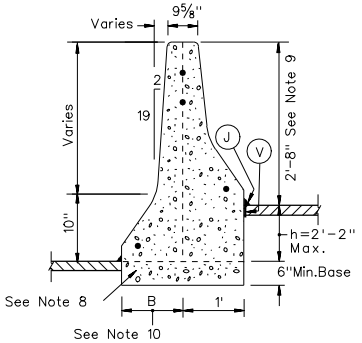

TYPE D

Concrete Barrier Rail Lateral Flare Rates

DESIGN SPEED	FLARE RATE
75 MPH	22:1
70 MPH	20:1
60 MPH	17:1
50 MPH	14:1
40 MPH	11:1
30 MPH	8:1

NEVADA DEPARTMENT OF TRANSPORTATION

CONCRETE BARRIER RAIL

Signed Original On File	R-8.6.1	(502)
CHIEF ROAD DESIGN ENGR.	ADOPTED 11/86	REVISION 6/09

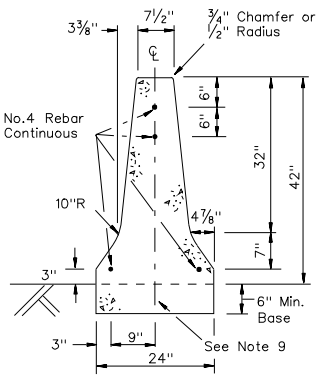

TYPE FA

CONCRETE (FOR INFORMATION ONLY)

0.1801 yd.^{3} PER LIN. FT. WITH BASE

0.1431 yd.^{3} PER LIN. FT. WITHOUT BASE

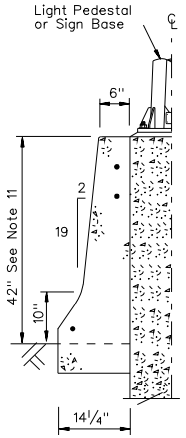

TYPE FB

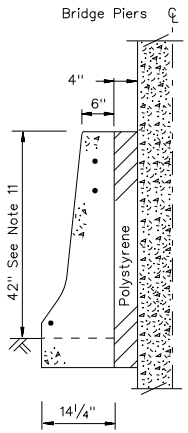

TYPE FB

CONCRETE (FOR INFORMATION ONLY)

0.1178 yd.^{3} PER LIN. FT. WITH BASE

0.0958 yd.^{3} PER LIN. FT. WITHOUT BASE

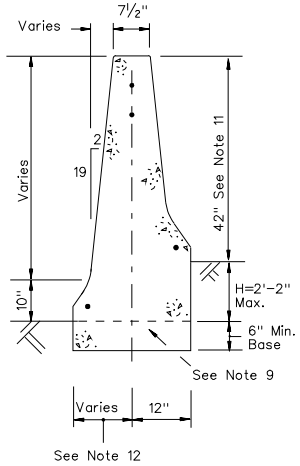

TYPE FD

NOTES:

1. CONCRETE SHALL BE CLASS A OR AA.
2. MEDIAN BARRIER RAIL SHALL BE SCORED ½" DEEP VERTICALLY EVERY 15'.
3. ALL CONTACT JOINTS SHALL BE AT PLANNED SCORED JOINT LOCATIONS.
4. ALL JOINTS AND OTHER LOCATIONS NEEDING SEALING SHALL FOLLOW REQUIREMENT SET IN SHEET R-8.6.1.
5. FOR IMPACT ATTENUATOR ATTACHMENT DETAILS, SEE MANUFACTURERS DRAWING. MEDIAN END TREATMENTS SHALL BE BI-DIRECTIONAL.
6. REFER TO THE CURRENTLY ADOPTED ROADSIDE DESIGN GUIDE FOR FURTHER DESIGN INFORMATION NOT SHOWN HERE.
7. EXPANSION JOINTS AT ALL STRUCTURES. JOINTS IN BARRIER RAIL OVER A STRUCTURE SHALL BE AT THE SAME LOCATION AND OF THE SAME DIMENSIONS AS THOSE IN THE STRUCTURE. JOINT FILLER NOT REQUIRED IN EXPANSION JOINT IN BARRIER RAIL.
8. LENGTH 3' MINIMUM OR LENGTH OF OBSTRUCTION, WHICHEVER IS GREATER. SEE CONTRACT PLANS FOR EXACT DIMENSIONS.
9. DEPTH OF 6" BASE SHALL BE CHECKED AND INCREASED AS NEEDED FOR FOUNDATION STABILITY. WHEN BARRIER RAIL SITS ON PAVEMENT, THE BASE CAN BE ELIMINATED. BARRIER RAIL END ANCHORS SHALL BE REQUIRED. SEE SHEET R-8.6.1.
10. THE 42" TYPE FA BARRIER RAIL MAY ALSO BE CONSIDERED ON THE OUTSIDE CURVE NEXT TO SENSITIVE AREAS SUCH AS SCHOOLS, HOUSING DEVELOPMENTS, AND PROBLEM AREAS THAT NEED EXTRA PROTECTION.
11. FOR DETAILS NOT SHOWN SEE TYPE FA.
12. VARIES = 2/19 X H + 12".
13. FOR TRANSITIONS FOR HEIGHTS, SEE SHEET R-8.6.3.
14. FOR DETAILS NOT SHOWN, SEE SHEET R-8.6.1.

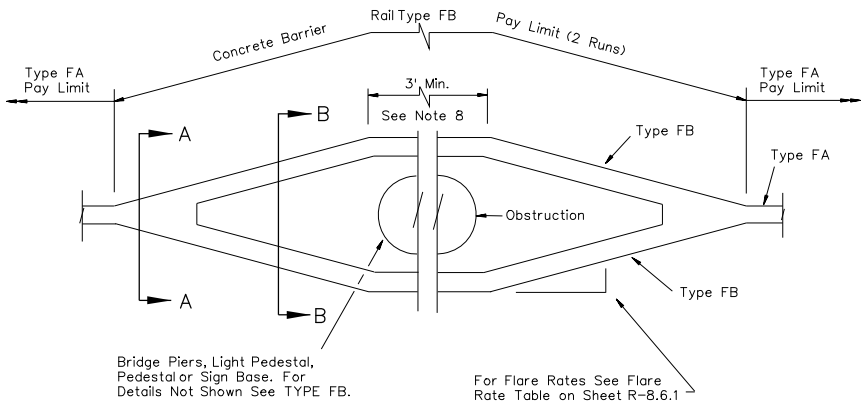

PLAN

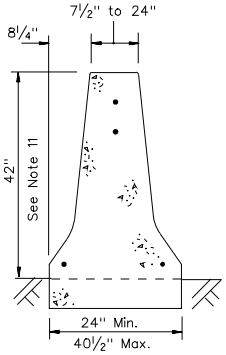

SECTION A-A

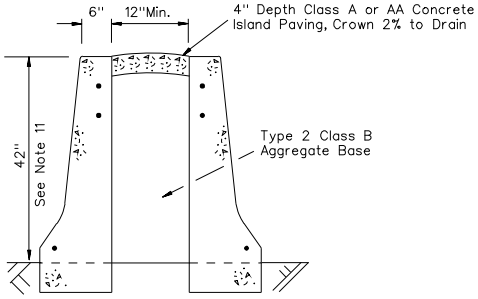

SECTION B-B

NEVADA DEPARTMENT OF TRANSPORTATION

CONCRETE BARRIER RAIL

Signed Original On File	R-8.6.2	(502)
CHIEF ROAD DESIGN ENGR.	ADOPTED 9/97	REVISION 5/09

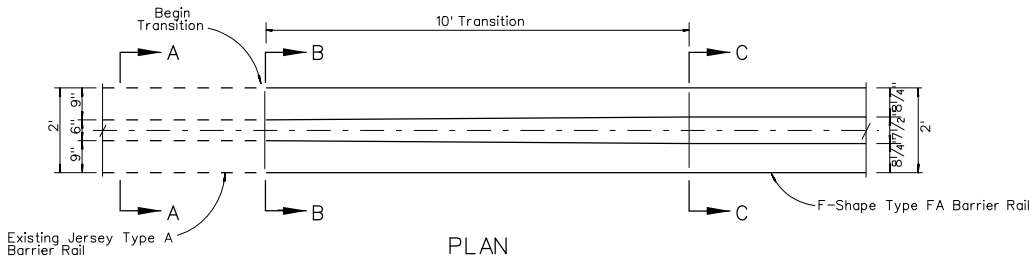

PLAN

NOTES:

1. CONCRETE SHALL BE CLASS A OR AA.
2. THE HEIGHT OF THE BARRIER RAIL SHALL BE MEASURED FROM THE TOP OF THE PLANTMIX BITUMINOUS SURFACE OR THE TOP OF CONCRETE PAVEMENT.
3. ROUGHEN CONTACT FACE OF EXISTING RAIL TO 1/4" RELIEF PRIOR TO POURING NEW RAIL TRANSITION.
4. AT THE INDICATED REINFORCING LOCATIONS, DRILL 3/4" HOLES IN CONTACT FACE OF EXISTING RAIL TO A MINIMUM DEPTH OF 12" AND INCLINED 5 DEGREES FROM THE HORIZONTAL. SECURE NO. 4 REINFORCING BARS IN THE DRILLED HOLES WITH AN EPOXY CONFORMING TO SECTION 728 OF THE STANDARD SPECIFICATIONS.
5. PLACE STRAIGHT AND/OR BENT NO. 4 REINFORCING BARS IN RAIL TRANSITIONS AS INDICATED. SPLICES IN REINFORCING STEEL AT TRANSITION ENDS ARE PERMITTED (MINIMUM 12" LAP LENGTH).
6. FOR DETAILS NOT SHOWN, SEE SHEETS R-8.6.1 TO R-8.6.2.

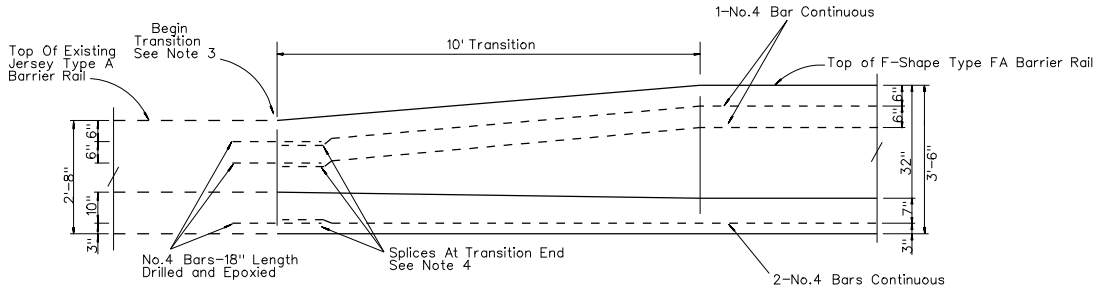

ELEVATION

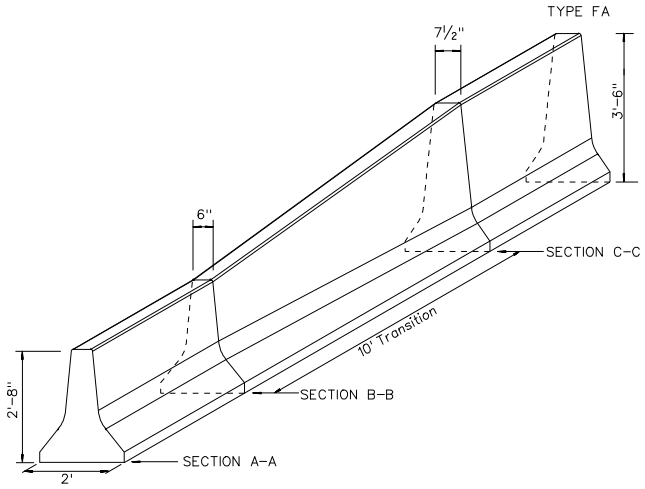

EXISTING JERSEY TYPE A

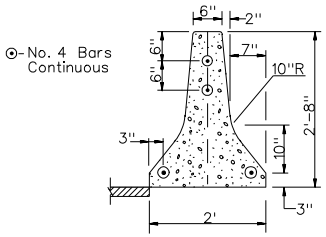

SECTION A-A
EXISTING JERSEY TYPE A

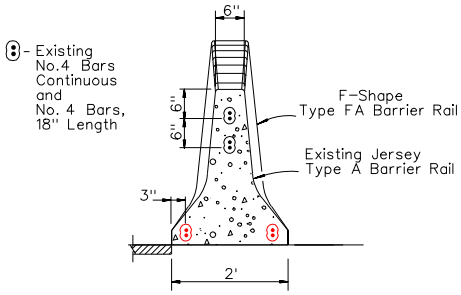

SECTION B-B

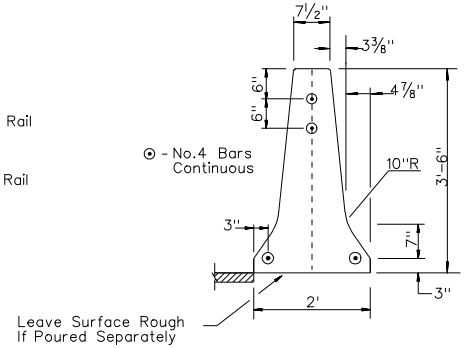

SECTION C-C
TYPE FA

NEVADA DEPARTMENT OF TRANSPORTATION

CONCRETE BARRIER RAIL
JERSEY TYPE A
TO TYPE FA

Signed Original On File	R-8.6.3	(502)
CHIEF ROAD DESIGN ENGR.	ADOPTED 1/01	REVISION 5/09

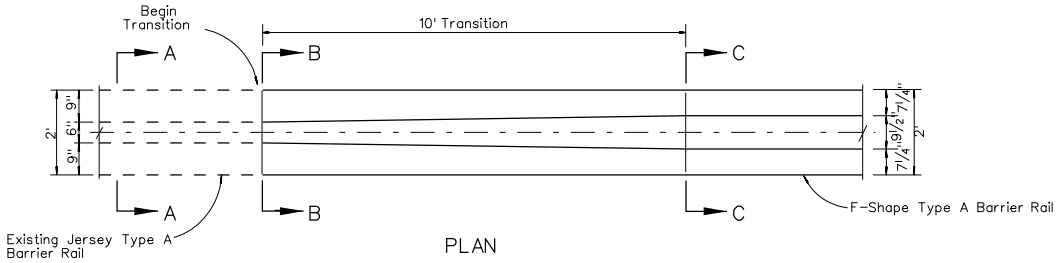

PLAN

NOTES:

1. CONCRETE SHALL BE CLASS A OR AA.
2. THE HEIGHT OF THE BARRIER RAIL SHALL BE MEASURED FROM THE TOP OF THE PLANTMIX BITUMINOUS SURFACE OR THE TOP OF CONCRETE PAVEMENT.
3. ROUGHEN CONTACT FACE OF EXISTING RAIL TO 1/4" RELIEF PRIOR TO POURING NEW RAIL TRANSITION.
4. AT THE INDICATED REINFORCING LOCATIONS, DRILL 3/4" HOLES IN CONTACT FACE OF EXISTING RAIL TO A MINIMUM DEPTH OF 12 INCHES AND INCLINED 5 DEGREES FROM THE HORIZONTAL. SECURE NO. 4 REINFORCING BARS IN THE DRILLED HOLES WITH AN EPOXY CONFORMING TO SECTION 728 OF THE STANDARD SPECIFICATIONS.
5. PLACE STRAIGHT AND/OR BENT NO. 4 REINFORCING BARS IN RAIL TRANSITIONS AS INDICATED. SPLICES IN REINFORCING STEEL AT TRANSITION ENDS ARE PERMITTED (MINIMUM 12" LAP LENGTH).
6. FOR DETAILS NOT SHOWN, SEE SHEETS R-8.6.1 TO R-8.6.2.

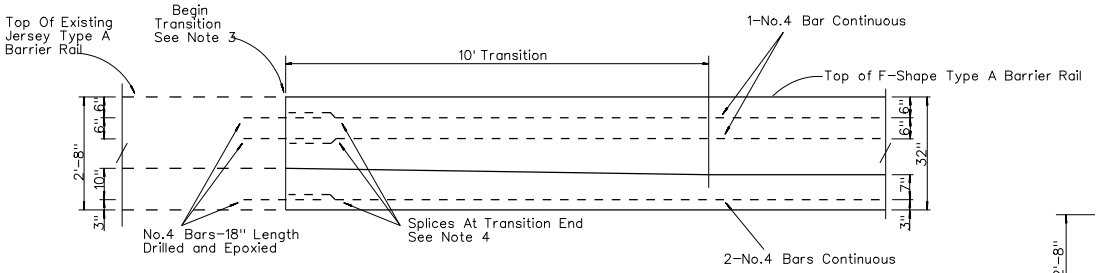

ELEVATION

NEW TYPE A

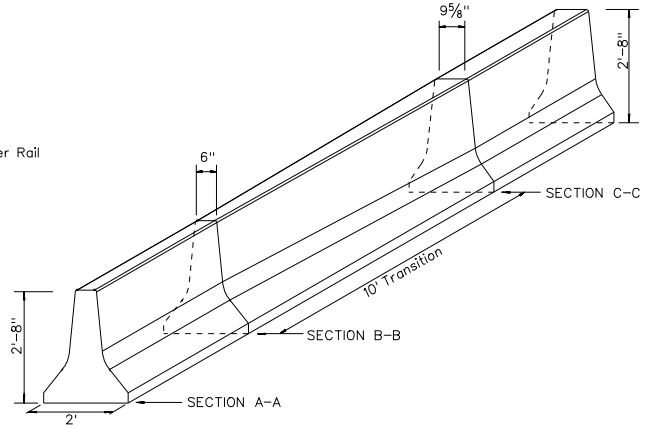

EXISTING JERSEY TYPE A

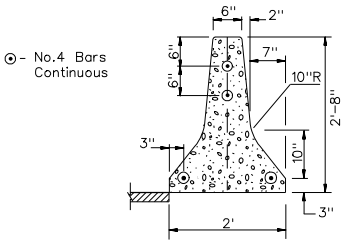

SECTION A-A
EXISTING JERSEY TYPE A

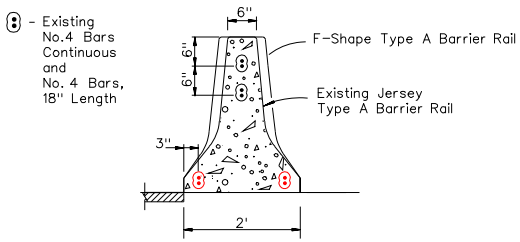

SECTION B-B

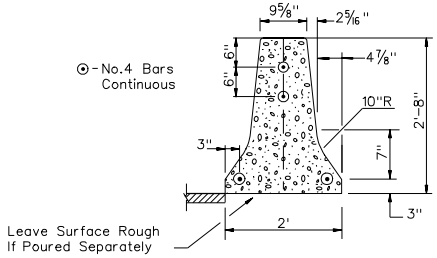

SECTION C-C
(F-SHAPE, TYPE A)

NEVADA DEPARTMENT OF TRANSPORTATION

CONCRETE BARRIER RAIL
JERSY TYPE A
TO F-SHAPE TYPE A

Signed Original On File	R-8.6.4	(502)
CHIEF ROAD DESIGN ENGR.	ADOPTED 1/01	REVISION 5/09

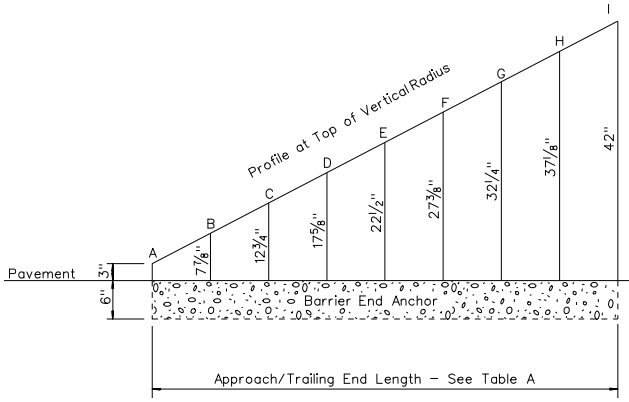

END OF BARRIER TRANSITION

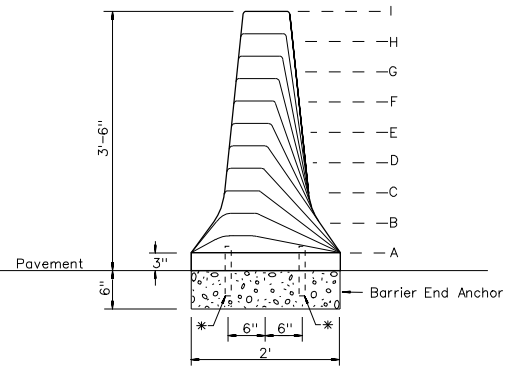

VERTICAL TAPER DETAIL - TYPE FA

TABLE A
20' Trailing End Length With 8 - 2'6" Equal Spaces
80' Approach End Length With 8 - 10' Equal Spaces

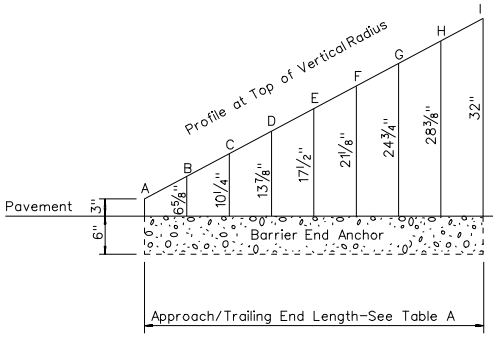

END OF BARRIER TRANSITION

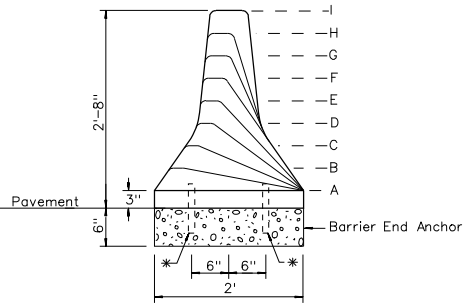

VERTICAL TAPER DETAIL - TYPE A

NOTES:

1. USE ONLY WHEN SPECIFIC CRITERIA ARE MET. THE CRITERIA FACTORS ARE THE CLEAR ZONE, DIRECTION OF TRAFFIC, OFFSET DISTANCES, AND SPEED ZONES. APPROACH AND TRAILING END CRITERIA ARE TREATED SEPARATELY.

   APPROACH END CRITERIA - REQUIRES CHIEF ROADWAY DESIGN ENGINEER APPROVAL. MAY ONLY BE USED FOR APPROACH ENDS WHEN OUTSIDE CLEAR ZONE OR SPEEDS ARE LESS THAN OR EQUAL TO 40 MPH.

   TRAILING END CRITERIA - MAY BE USED FOR TRAILING END FOR ALL SPEEDS WHEN TRAFFIC IS ONE-WAY TRAFFIC AND BEYOND THE OPPOSING DIRECTION CLEAR ZONE, E.G. SOME ON-RAMPS, OFF-RAMPS, AND DIVIDED HIGHWAYS.

2. CONCRETE SHALL BE CLASS A OR AA. TRANSVERSE JOINTS WITH 1" PREMOLDED EXPANSION JOINT FILLER OR 1" OPEN TRANSVERSE JOINTS SHALL BE PLACED AT STRUCTURES. JOINTS IN BARRIER RAIL OVER A STRUCTURE SHALL BE AT THE SAME LOCATION AND OF THE SAME DIMENSION AS THOSE IN THE STRUCTURE.

3. 6" DEEP BARRIER END ANCHORS SHALL BE CONSTRUCTED IN THE FIRST AND LAST 10 LINEAR FEET OF THE FULL HEIGHT BARRIER RAIL RUN. IF TRANSITIONS ARE USED, THE ANCHOR SHALL BE EXTENDED UNDER THE TRANSITION SECTION.

4. VERTICAL JOINTS SHALL HAVE A SINGLE COMPONENT HOT APPLIED SEALANT FULL DEPTH OF JOINT.

5. JOINT SEALER SHALL BE A SINGLE COMPONENT HOT APPLIED SEALANT 1" THICK.

6. THE HEIGHT OF THE BARRIER RAIL SHALL BE MEASURED FROM THE TOP OF THE OPEN GRADED (PLANTMIX BITUMINOUS SURFACE), OR THE TOP OF THE FINISH GRADE (P.C.C.P.).

7. JOINT FILLER SHALL BE PLACED IN OPEN JOINTS IN THE BARRIER AS REQUIRED TO MATCH JOINTS IN THE APPROACH SLAB DETAIL.

8. DOWELS AND REINFORCING STEEL TO EXTEND INTO END SECTIONS. ADJUST LOCATIONS AND TERMINATE BARS AS NECESSARY TO MAINTAIN 2" MINIMUM COVER.

9. FOR DETAILS NOT SHOWN, REFER TO SHEET R-8.6.1.

LEGEND:

✳ - 1" x 8" Steel Dowel @ 2' Centers (If Needed See Note 3)

NEVADA DEPARTMENT OF TRANSPORTATION

VERTICAL TAPER
CONCRETE BARRIER RAIL

Signed Original On File	R-8.6.5		(502)
CHIEF ROAD DESIGN ENGR.	ADOPTED 11/86	REVISION 2/03	

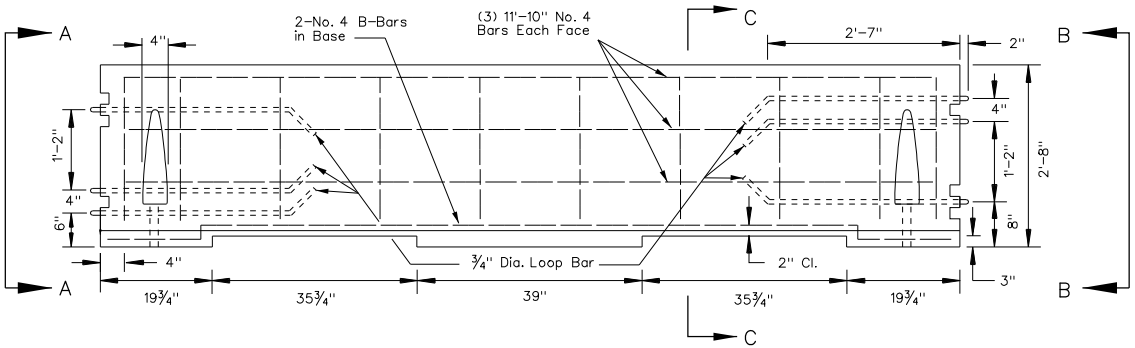

ELEVATION

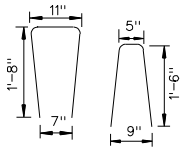

No. 4 Rebar

STIRRUP BARS

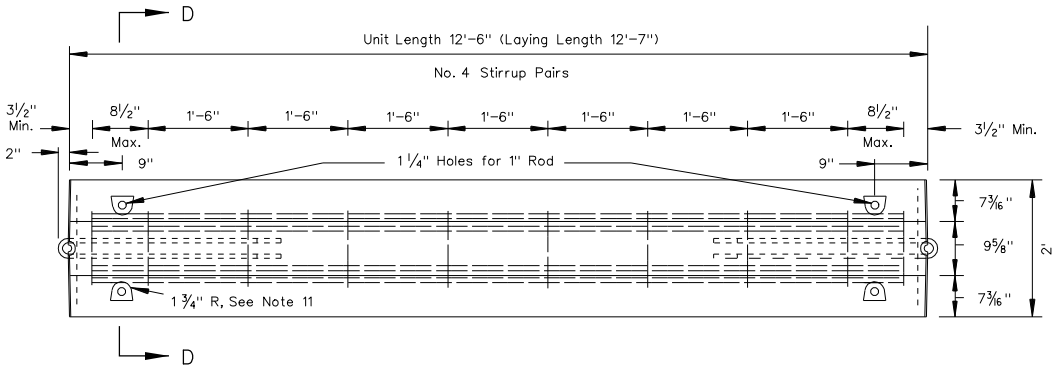

PLAN

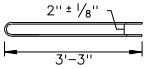

TOP VIEW

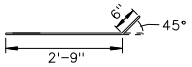

SIDE VIEW

¾" Dia. (A36) LOOP BAR

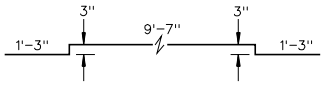

No. 4 B-Bar

NOTES:

1. REINFORCING STEEL SHALL BE GRADE 60. A MINIMUM CLEARANCE OF 2" FROM REINFORCING STEEL EXTERIOR TO CONCRETE SURFACE, SEE DETAIL SECTION C-C.
2. FOR EDGE OF BRIDGES, BACK SPACING FROM THE BACK OF THE BARRIER RAIL TO THE EDGE OF THE BRIDGE SHALL BE 4'. FOR THE EDGE OF SHOULDERS, BACK SPACING SHALL BE 3'. IF BACK SPACING CANNOT BE OBTAINED, ANCHOR PIN ALL SECTIONS ADJACENT TO THE BRIDGE EDGE OR SHOULDER, (4) ANCHOR PINS PER SECTION.
3. PLACE REFLECTORS AS SHOWN ON SHEET R-9.2.2.
4. TOP WASHER SHALL BE FORGED AS INTEGRAL PART OF ROD OR SHALL BE WELDED AS SHOWN.
5. RODS THAT CONFORM TO CRITICAL DIMENSIONS, (ROD LENGTH AND DIAMETER, WASHER DIAMETER AND THICKNESS) ARE ACCEPTABLE IF AN APPROVED TOP CONFIGURATION FOR LIFTING THE ROD IS PROVIDED.
6. CONCRETE SHALL BE CLASS A OR AA.
7. SEE ASTM D 1785.
8. DRILL 1" DIAMETER HOLES, AFTER PLACEMENT OF RAIL, FOR ANCHOR PINNING THROUGH THE PAVEMENT. DRILLING OPERATION IS NOT TO DAMAGE THE PAVEMENT.
9. THE WEIGHT PER BARRIER RAIL PANEL IS APPROXIMATELY 3 TONS.
10. ANCHOR PIN FIRST AND LAST UNITS OF EACH RUN (LONG TERM STATIONARY AS DEFINED BY MUTCD, PART 6).
11. RECTANGULAR POCKETS MAY BE USED IN LIEU OF CONICAL POCKETS.
12. EACH ¾" DIAMETER LOOP BAR TO BE HOT-DIP GALVANIZE AFTER FABRICATION.
13. WHEN USED AS A PERMANENT INSTALLATION, ALL SECTIONS SHALL BE ANCHOR PINNED, EXCEPT IN MEDIANS WIDER THAN 10'.

SHEET 1 OF 2

NEVADA DEPARTMENT OF TRANSPORTATION

PORTABLE PRECAST CONCRETE BARRIER RAIL

Signed Original On File	R-8.7.1	(502)
CHIEF ROAD DESIGN ENGR.	ADOPTED 8/98	REVISION 5/09

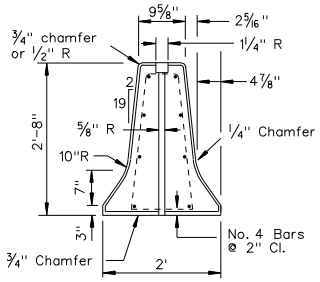

TYPICAL F SHAPE

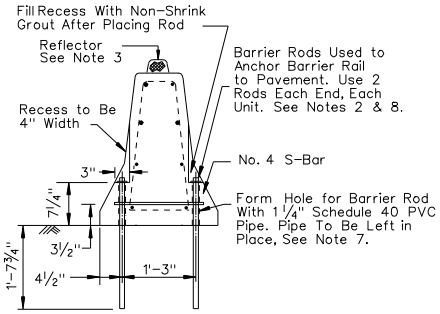

ELEVATION VIEW @ ANCHOR PINS
SECTION D-D

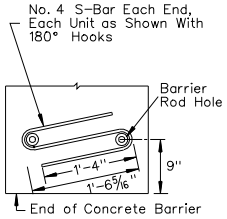

S-BAR DETAILS

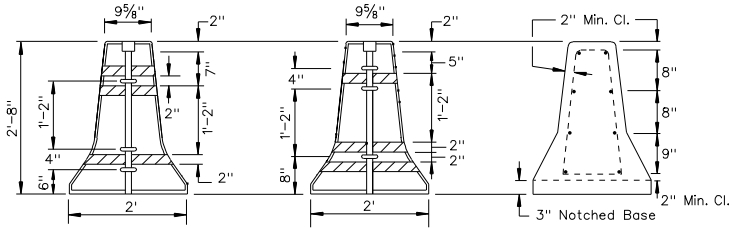

SECTION A-A SECTION B-B SECTION C-C

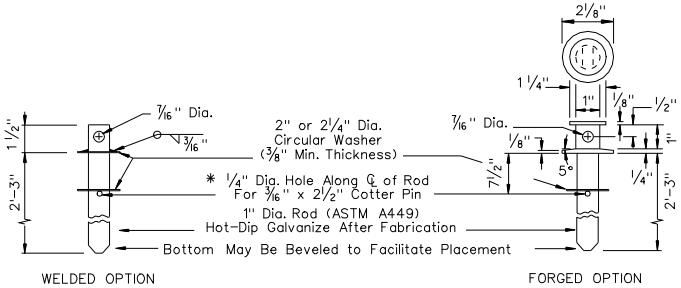

* Not Required if Barrier Rod is to Be Used to Anchor Barrier Rail to Pavement.

BARRIER ROD DETAIL
Also See SECTION D-D & SECTION E-E

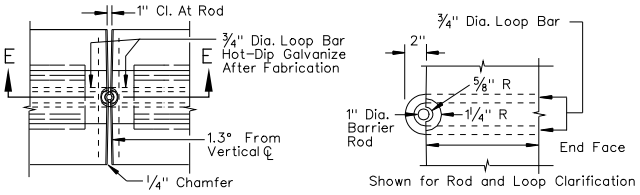

For Details Not Shown, See SECTION A-A and SECTION B-B

ROD AND LOOP CONNECTION (PLAN VIEW)

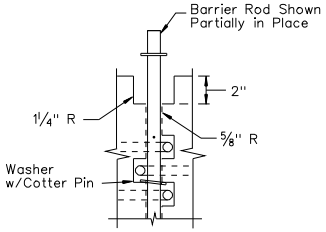

SECTION E-E

SHEET 2 OF 2

NEVADA DEPARTMENT OF TRANSPORTATION

PORTABLE PRECAST CONCRETE BARRIER RAIL

Signed Original On File	R-8.7.1.1	(502)
CHIEF ROAD DESIGN ENGR.	ADOPTED 8/98	REVISION 5/09

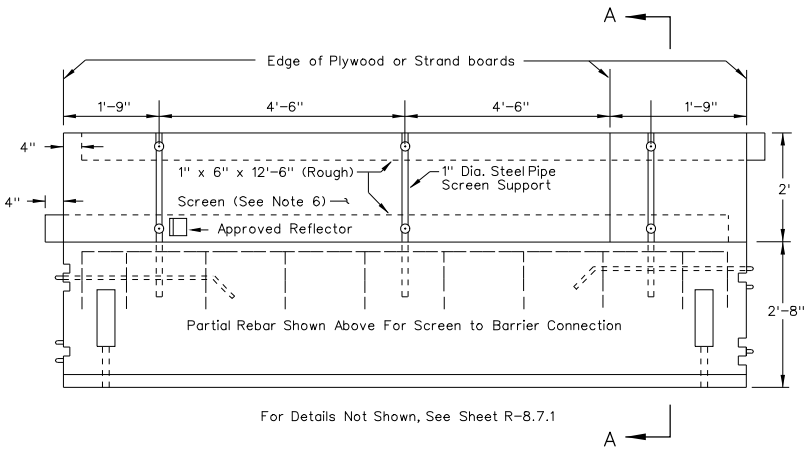

ELEVATION

PORTABLE PRECAST BARRIER RAIL F-SHAPES

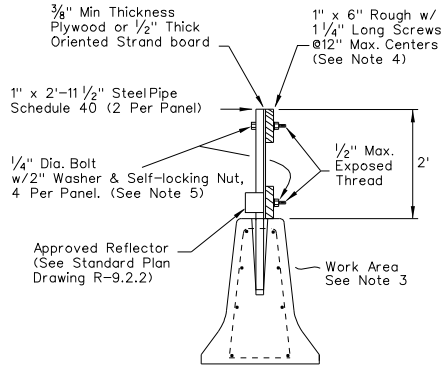

SECTION A-A

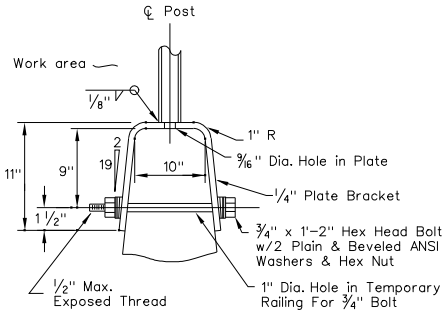

SECTION B-B

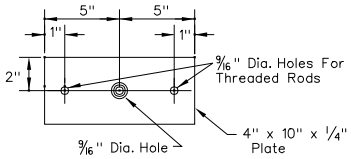

PLAN

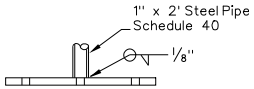

ELEVATION

ANCHOR PLATE DETAIL (ALTERNATIVE A)

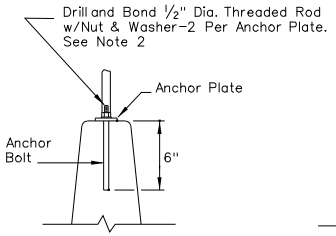

ALTERNATIVE A

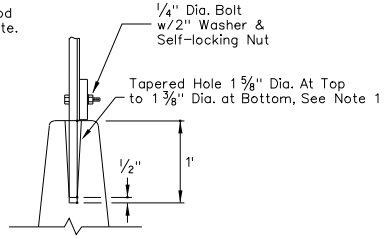

ALTERNATIVE B

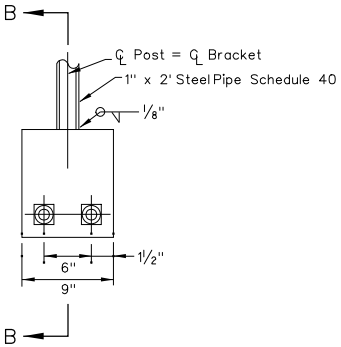

ALTERNATIVE C

SCREEN ANCHORAGE DETAILS

NOTES:

1. STRAIGHT HOLES 1½" DIAMETER MAY BE USED IN LIEU OF THE TAPERED HOLES.
2. RESIN CAPSULE-TYPE ANCHORAGE DEVICES MAY BE SUBSTITUTED FOR THREADED RODS.
3. PLACE SCREEN ON WORK AREA SIDE OF TEMPORARY RAILING WHERE TRAFFIC WILL ONLY BE ON ONE SIDE OF THE TEMPORARY RAILING. THE SCREEN MAY BE PLACED ON EITHER SIDE OF THE PIPE SUPPORT WHERE TRAFFIC WILL BE ON BOTH SIDES OF THE TEMPORARY RAILING.
4. CLINCHED 8D BOX NAILS MAY BE SUBSTITUTED FOR SCREWS. THE NAILS SHALL BE CLINCHED ON THE WORK AREA SIDE OF THE SCREEN WHERE TRAFFIC WILL ONLY BE ON ONE SIDE OF THE TEMPORARY RAILING.
5. ¼" U-BOLTS MAY BE SUBSTITUTED FOR ¼" DIAMETER BOLTS.
6. OPENINGS IN THE SCREEN AREA OF 3' SHALL BE PROVIDED AT 200' INTERVALS.

NEVADA DEPARTMENT OF TRANSPORTATION

TEMPORARY TRAFFIC SCREEN "F"

Signed Original On File	R-8.8.1	(502)
CHIEF ROAD DESIGN ENGR.	ADOPTED 8/98	REVISION 4/02

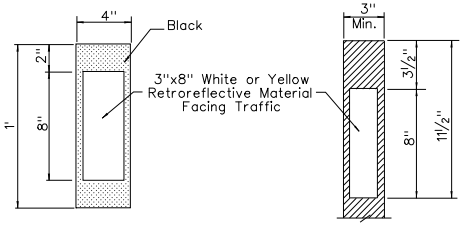

RIGID POST FLEXIBLE POST

TYPE 1 REFLECTORS

ROADWAY – RAMPS

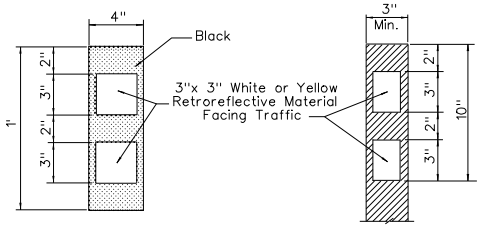

RIGID POST FLEXIBLE POST

TYPE 2 REFLECTORS

APPROACHES, ACCELERATION/DECELERATION LANES

All Approaches Shall Be Delineated With White Type 2 Guideposts at the Beginning and Ending Limits of the Approaches. Type 4 & 5 Approaches Will Have an Additional Guidepost at Each Taper Setback.

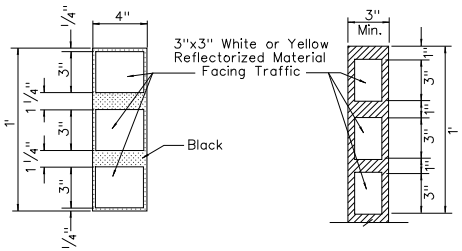

RIGID POST FLEXIBLE POST

TYPE 3 REFLECTORS

ISLANDS, CURBS, SHOULDER DIKES

TABLE 1

Maximum Spacing For Guideposts On Horizontal Curves Less Than Or Equal To 10,000'

All Distances Shown in Feet & Rounded To The Nearest 5'

RADIUS OF CURVE (R)	SPACING ON CURVE (S)	SPACING IN ADVANCE OF & BEYOND CURVE		
		1ST	2ND	3RD
50	20	40	60	120
150	30	60	90	180
200	35	70	105	210
250	40	80	120	240
300	50	100	150	300
400	55	110	165	300
500	65	130	195	300
600	70	140	210	300
700	75	150	225	300
800	80	160	240	300
900	85	170	255	300
1,000	90	180	270	300
1,200	100	200	300	300
1,400	110	220	300	300
1,600	120	240	300	300
1,800	125	250	300	300
2,000	130	260	300	300
2,500	150	300	300	300
3,000	165	300	300	300
5,000	210	300	300	300
10,000	300	300	300	300

SPACING FOR SPECIFIC RADII NOT SHOWN MAY BE INTERPOLATED FROM TABLE 1 OR COMPUTED FROM THE FORMULA $S = 3\sqrt{R-50}$. S REFERS TO THE DELINEATOR SPACING AND R REFERS TO THE RADIUS OF THE CURVE. THE MINIMUM SPACING SHOULD BE 20 FEET. THE MAXIMUM SPACING ON CURVES SHOULD NOT EXCEED 300 FEET. IN ADVANCE OF & BEYOND A CURVE, AND MEASURED PROCEEDING AWAY FROM THE END POINT OF THE CURVE, THE SPACING OF THE FIRST DELINEATOR IS 2S. THE THE SECOND IS 3S, AND THE THIRD 6S; BUT IN NO CASE TO EXCEED 300 FEET.

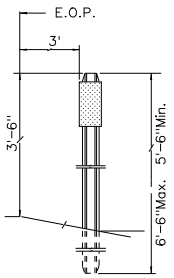

RIGID POST/REFLECTOR WITHOUT CURB & GUTTER

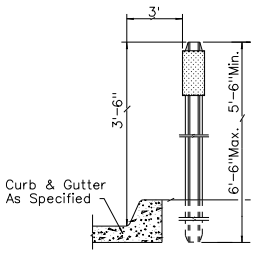

RIGID POST/REFLECTOR WITH CURB & GUTTER

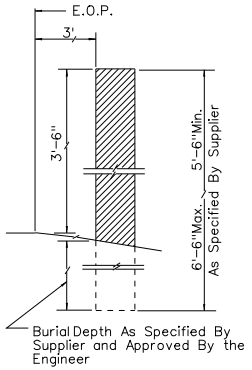

FLEXIBLE POST

For Tubular Post, Wraparound Reflectors Are Acceptable (See Types For Vertical Dimensions)

TYPICAL INSTALLATIONS

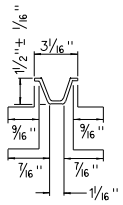

SECTION A–A

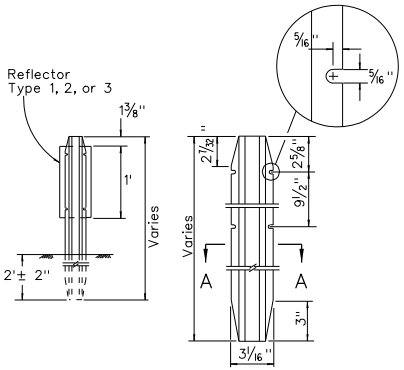

RIGID POST DETAILS

10 OR 11 GAGE THICKNESS

NOTES:

1. GUIDEPOST REFLECTOR COLOR SHALL CONFORM TO THE COLOR OF ADJACENT STRIPED EDGE LINE.

2. GUIDEPOST SPACING:
   a. TANGENT SECTIONS AND CURVES WITH RADII GREATER THAN 10,000', SPACING SHALL BE 400' BOTH SIDES OF ROADWAY.
   b. CURVES WITH RADII OF 10,000' OR LESS: SPACING 20' MINIMUM – 300' MAXIMUM.
      i. DISTANCE SHALL BE MEASURED ALONG CENTERLINE OF ROADWAY AND PROJECTED PERPENDICULARLY ACROSS TO INSIDE AND OUTSIDE OF CURVE.
      ii. GUIDEPOST SHALL BE PLACED AT BEGINNING AND END OF CURVE, WITH SPACING TRANSITIONED WITHIN THE TANGENT AS SHOWN IN TABLE 1. "1ST" INDICATES GUIDEPOST NEAREST CURVE, "3RD" IS FURTHEST AWAY.
      iii. SPACING WITHIN CURVE AS SHOWN IN TABLE 1.
   c. ACCELERATION/DECELERATION LANES & RAMPS: SPACING 100' MAXIMUM FOR TANGENTS & CURVES.
   d. TRUCK ESCAPE RAMPS: SPACING 50'.
   e. GUARDRAIL & BARRIER RAIL SECTIONS: SEE SHEET R-9.2.2.
   f. ISLANDS, CURBS & SHOULDER DIKES: SPACING 20' MINIMUM – 50' MAXIMUM.
   g. IF NORMAL SPACING IS INTERRUPTED BY FEATURES SUCH AS DRIVEWAYS, APPROACHES, ETC., THE GUIDEPOSTS MAY BE MOVED A MAXIMUM OF 1/4 OF NORMAL SPACING. GUIDEPOSTS FALLING WITHIN SUCH FEATURES SHALL BE ELIMINATED.

NEVADA DEPARTMENT OF TRANSPORTATION

GUIDE POSTS

Signed Original On File	R-9.1.1	(619)
CHIEF ROAD DESIGN ENGR.	ADOPTED 8/69	REVISION 11/06

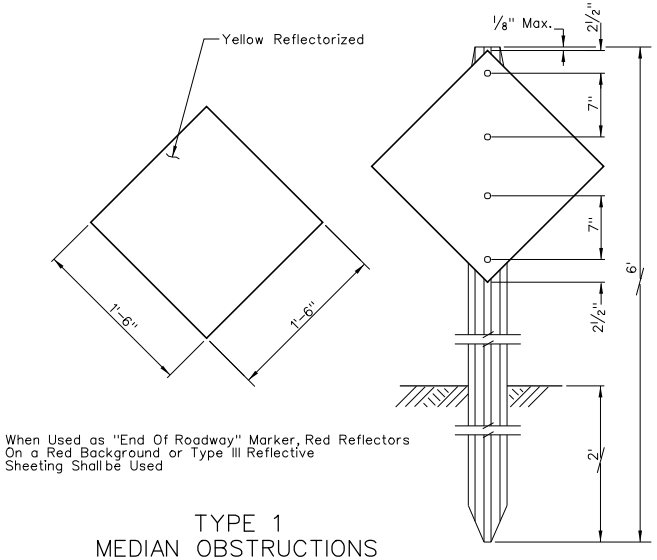

When Used as "End Of Roadway" Marker, Red Reflectors On a Red Background or Type III Reflective Sheeting Shall be Used

TYPE 1
MEDIAN OBSTRUCTIONS

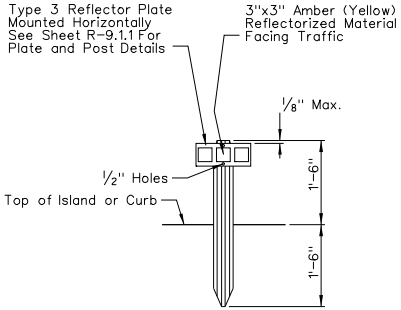

TYPE 2
USE ON APPROACH END OF
MEDIAN ISLANDS ONLY

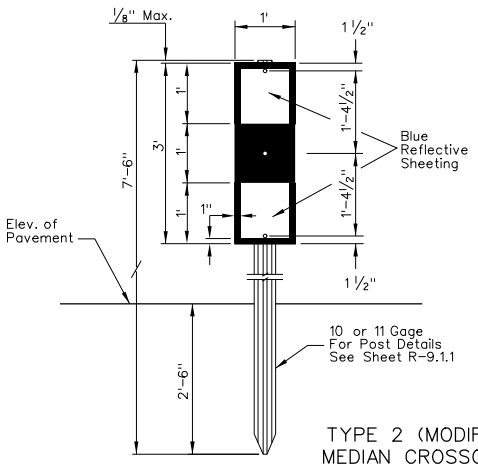

TYPE 2 (MODIFIED)
MEDIAN CROSSOVER

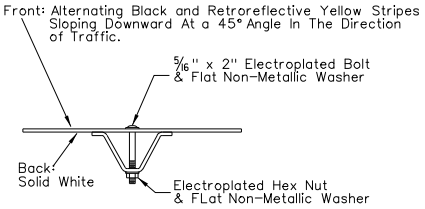

PLAN

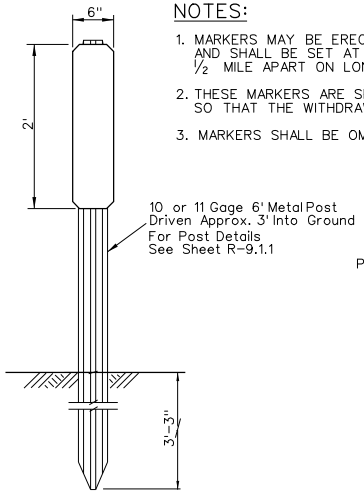

MATERIAL SITE
BOUNDARY MARKERS

NOTES:

1. MARKERS MAY BE ERECTED TO DEFINE WITHDRAWN AREA OF MATERIAL SITES, AND SHALL BE SET AT ALL CORNERS OR IRREGULAR LINES, AND APPROXIMATELY 1/2 MILE APART ON LONG TANGENTS.
2. THESE MARKERS ARE SPACED SO AS TO BE CLEARLY VISIBLE AND ERECTED SO THAT THE WITHDRAWN AREA MAY EASILY BE ESTABLISHED.
3. MARKERS SHALL BE OMITTED WHERE THE WITHDRAWN AREA IS FENCED.

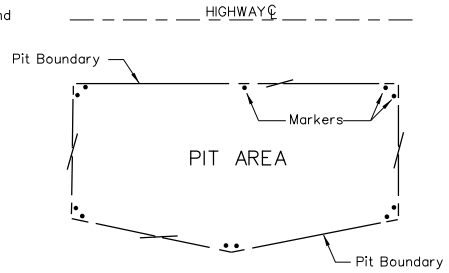

METHOD OF PLACEMENT

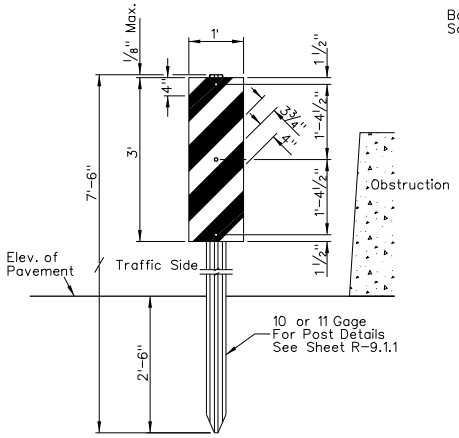

TYPE 3
BRIDGES, PIERS, ABUTMENTS

Object Markers Shall be Installed to Delineate Bridge Ends, Underpass Abutments and All Other Obstructions Closely Adjacent to the Edges of the Roadway. They May be Omitted When Guardrail or Barrier Rail Protects the Obstruction.

NEVADA DEPARTMENT OF TRANSPORTATION

OBJECT MARKERS

Signed Original On File	R-9.2.1		(619)
CHIEF ROAD DESIGN ENGR.	ADOPTED 8/69	REVISION 9/06	

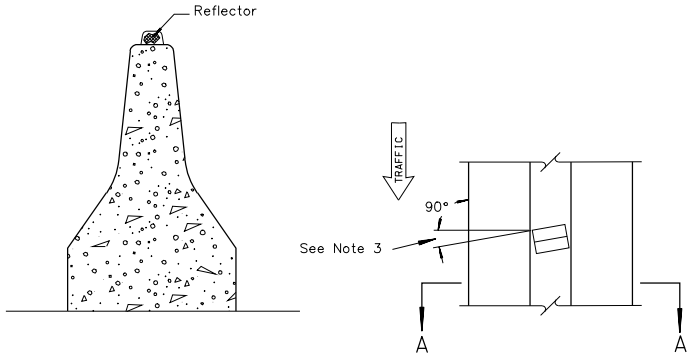

SECTION A-A

PLAN

BARRIER RAIL REFLECTOR INSTALLATION

NOTES:

1. ALL REFLECTORS SHALL BE SELECTED & INSTALLED PURSUANT TO THE PROJECT PLANS & SPECIFICATIONS OR AT THE DIRECTION OF THE ENGINEER. THE DEPICTED REFLECTORS ARE FOR MOUNTING LOCATION INFORMATION ONLY.
2. SPACING: SEE "REFLECTOR PLACEMENT ON GUARDRAIL" NOTES AND TABLE "A", OF THIS SHEET.
3. REFLECTORS SHALL BE MOUNTED AT THE ANGLE SPECIFIED BY THE MANUFACTURER OR AS DIRECTED BY THE ENGINEER.
4. COLOR: SHALL COMPLY WITH THE GUIDELINES ESTABLISHED BY THE CURRENTLY ADOPTED M.U.T.C.D. EDITION.

REFLECTOR PLACEMENT SPACING ON GUARDRAIL/BARRIER RAIL:

SPACING SHALL BE:

(a) 50' ON TANGENTS AND ON CURVES OF 300' RADIUS OR GREATER. IF LESS THAN 300' RADIUS SEE TABLE A.

(b) REFLECTORS SHALL BE OMITTED ON THE FLARED SECTIONS OF GUARDRAIL.

(c) NO DIRECT PAYMENT FOR REFLECTORS ON BARRIER RAIL.

TABLE A

Radius of Curve	Reflector Spacing
≤ 50'	20'
150'	30'
200'	35'
250'	40'
≥ 300'	50'

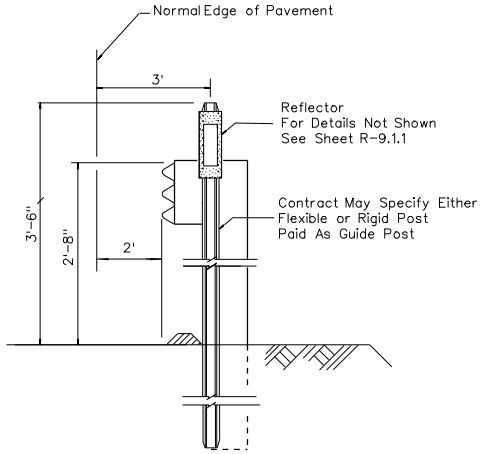

TYPICAL GUARDRAIL-GUIDE POST INSTALLATION

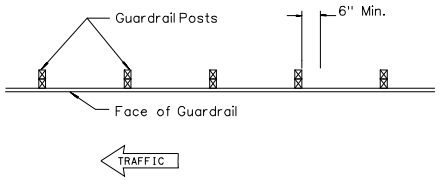

GUARDRAIL-GUIDE POST LOCATION

NEVADA DEPARTMENT OF TRANSPORTATION

REFLECTORS
GUARDRAIL-GUIDE POST

Signed Original On File	R-9.2.2	(618,619)
CHIEF ROAD DESIGN ENGR.	ADOPTED 7/96	REVISION 6/09

NOTES:

1. CONCRETE SHALL BE CLASS A OR AA.
2. MONUMENTS MAY BE POURED SQUARE OR ROUND.
3. MONUMENT STAMPING SHALL BE DONE ACCORDING TO LOCATION DIVISION'S "SPECIAL INSTRUCTIONS FOR SURVEY, MAPPING, OR GIS CONSULTANTS" MANUAL.

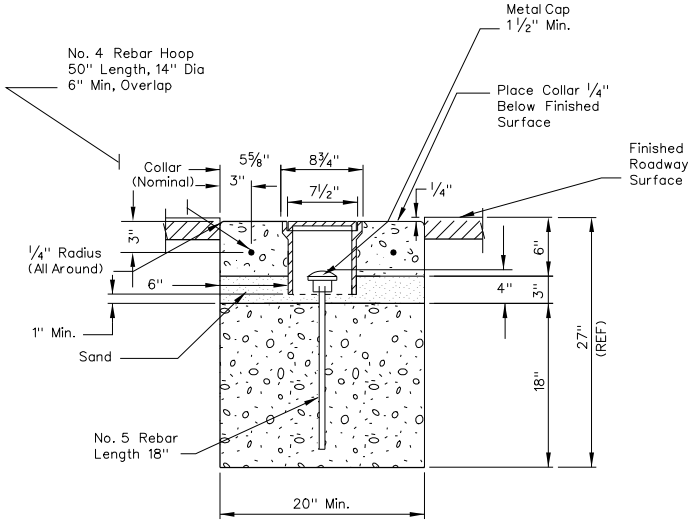

SURVEY COVER & RING
(CAST IRON)

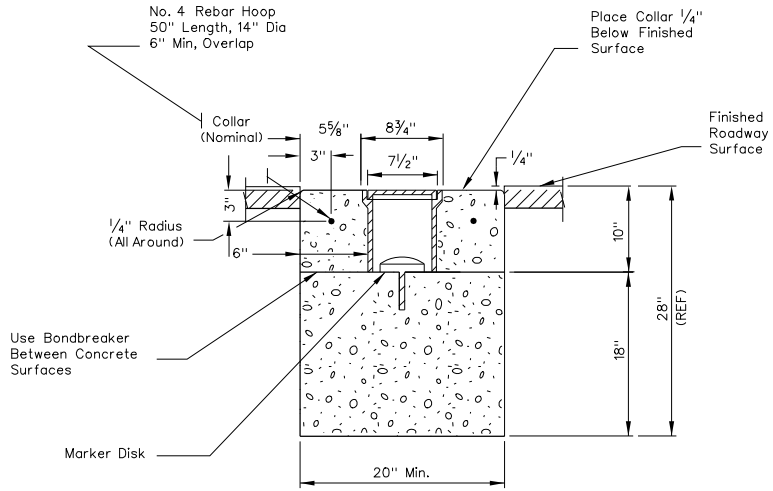

ALTERNATE PLACEMENT
(CAST IRON)

SURVEY MONUMENTS

NEVADA DEPARTMENT OF TRANSPORTATION

SURVEY MONUMENTS

Signed Original On File	R-9.3	(621)
CHIEF ROAD DESIGN ENGR.	ADOPTED 7/96	REVISION 3/02

ALL MEASUREMENT ± 1/16" TOLERANCE

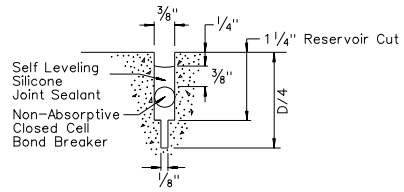

TRANSVERSE WEAKENED PLANE JOINT DOUBLE SAW CUT

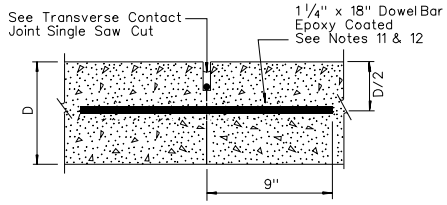

SECTION A–A
TRANSVERSE CONTACT JOINT WITH DOWEL BARS
See Note 5

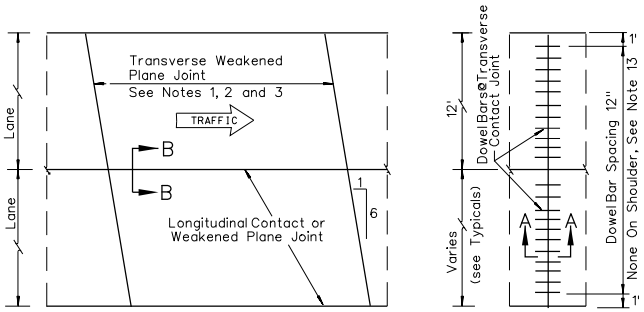

PLAN

ALL MEASUREMENT ± 1/16" TOLERANCE

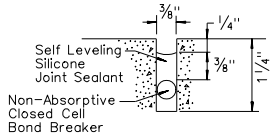

TRANSVERSE CONTACT JOINT SINGLE SAW CUT

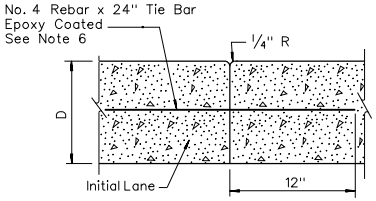

SECTION B–B
LONGITUDINAL CONTACT JOINT

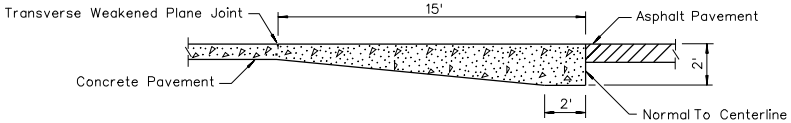

PAVEMENT END ANCHOR DETAIL
See Note 8

ALL MEASUREMENT ± 1/16" TOLERANCE

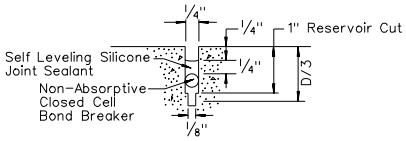

LONGITUDINAL WEAKENED PLANE JOINT DOUBLE SAW CUT

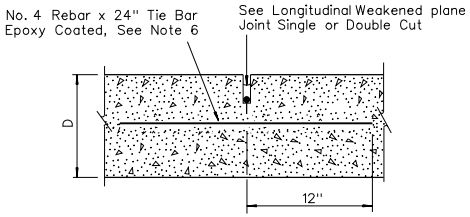

SECTION B–B
LONGITUDINAL WEAKENED PLANE JOINT

ALL MEASUREMENT ± 1/16" TOLERANCE

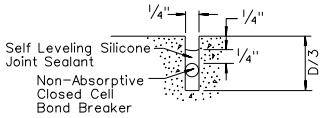

LONGITUDINAL WEAKENED PLANE JOINT SINGLE SAW CUT

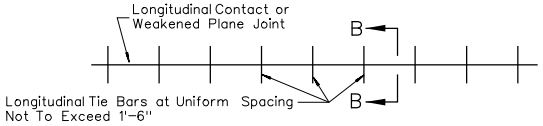

PLAN
TIE BAR DETAIL
See Note 6

NOTES:

1. ALL WEAKENED PLANE JOINTS SHALL BE SAWED DIAGONALLY AS SHOWN, EXCEPT AS INDICATED IN THE END ANCHOR AND STRUCTURE APPROACH DETAILS. WHEN ONLY ONE LANE IS BEING CONSTRUCTED ALONGSIDE EXISTING LANES, JOINTS SHALL BE SAWED EITHER DIAGONALLY OR AS DIRECTED BY THE ENGINEER. OFFSET IS 1 IN 6 AND SKEWED COUNTERCLOCKWISE.
2. SPACING OF WEAKENED PLANE JOINTS SHALL BE SUCCESSIVELY 15', 13', 14', 12' AND REPEAT, EXCEPT FOR THE FIRST JOINT AT PAVEMENT END ANCHORS AND AT REINFORCED STRUCTURE APPROACHES.
3. TRANSVERSE CONTACT JOINTS SHALL BE CONSTRUCTED AT LEAST 6' FROM ANY TRANSVERSE WEAKENED PLANE JOINT.
4. LONGITUDINAL WEAKENED PLANE JOINTS SHALL BE CUT AT ALL LANE AND SHOULDER LINES EXCEPT WHERE LANE PLUS ADJACENT SHOULDER WIDTH IS LESS THAN OR EQUAL TO 16'.
5. ALL TRANSVERSE CONTACT JOINTS SHALL BE SAWED AND JOINT SEALER USED PER RESPECTIVE TRANSVERSE CONTACT JOINT DETAIL THIS SHEET.
6. ALL TIE BARS TO BE EPOXY COATED EXCEPT IN CLARK CO. TIE BARS TO BE PLACED IN MIDDLE 1/3 OF SLAB THICKNESS.
7. TRANSVERSE CONTACT JOINTS WITH DOWEL BARS SHALL BE USED AT ALL CONSTRUCTION JOINTS AND ELSEWHERE IF ORDERED BY THE ENGINEER.
8. PAVEMENT END ANCHORS SHALL BE CONSTRUCTED AS THE TERMINAL PANELS OF ALL PAVEMENT NOT ABUTTING EXISTING CONCRETE PAVEMENTS OR STRUCTURES, AND ELSEWHERE IF ORDERED BY THE ENGINEER.
9. INITIAL 1/8" WEAKENED PLANE JOINT SAW CUT TO BE DONE WITHIN SPECIFIED TIME LIMIT. RESERVOIR CUT SHALL BE DONE AT A LATER TIME.
10. RATIO OF DEPTH TO WIDTH OF JOINT SEALANT SHALL BE 1:1
11. DOWEL BARS SHALL BE LOCATED WITHIN 1" OF THE PLANNED TRANSVERSE AND DEPTH LOCATION AND WITHIN 2" OF THE PLANNED LONGITUDINAL LOCATION.
12. THE DOWEL BARS SHALL BE PARALLEL TO THE PAVEMENT SURFACE AND CENTERLINE WITHIN A TOLERANCE OF 1/2" IN 18".
13. DOWEL BARS SHALL NOT BE PLACED WITHIN 12" OF LONGITUDINAL JOINTS.
14. D = SLAB THICKNESS.

NEVADA DEPARTMENT OF TRANSPORTATION

PLAIN JOINTED CONCRETE PAVEMENT DETAILS

Signed Original On File	R-10.1.1		(409)
CHIEF ROAD DESIGN ENGR.	ADOPTED 7/96	REVISION 9/97	

ALL MEASUREMENT ±1/16" TOLERANCE

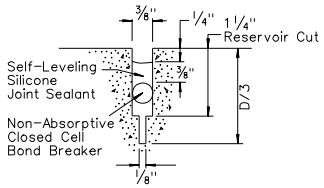

TRANSVERSE WEAKENED PLANE JOINT DOUBLE SAW CUT

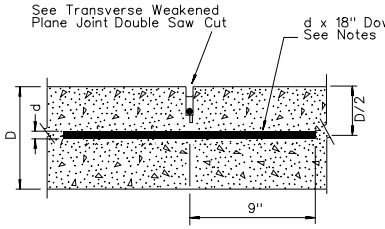

SECTION C–C
TRANSVERSE WEAKENED PLANE JOINT

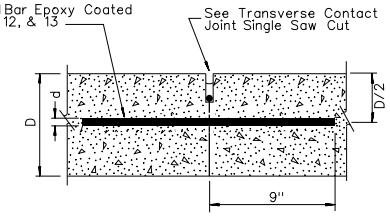

SECTION A–A
TRANSVERSE CONTACT JOINT
See Note 5

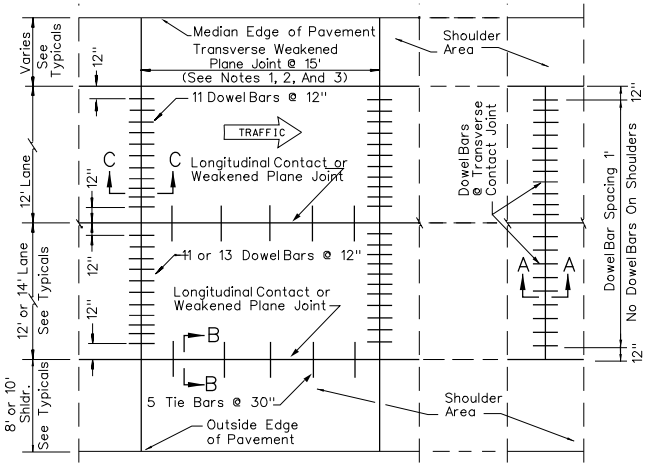

PLAN

TIE BAR AND DOWEL BAR APPLICATIONS
(TWO LANES SHOWN, TYP. FOR ADDITIONAL LANES)

ALL MEASUREMENT ±1/16" TOLERANCE

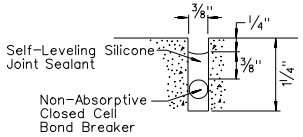

TRANSVERSE CONTACT JOINT SINGLE SAW CUT

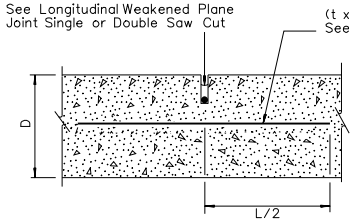

SECTION B–B
LONGITUDINAL WEAKENED PLANE JOINT

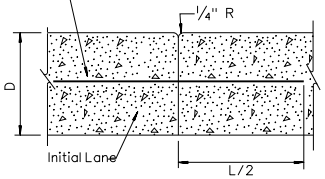

SECTION B–B
LONGITUDINAL CONTACT JOINT

ALL MEASUREMENT ±1/16" TOLERANCE

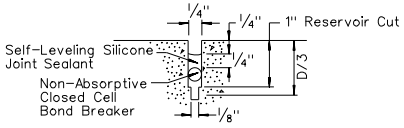

LONGITUDINAL WEAKENED PLANE JOINT DOUBLE SAW CUT

ALL MEASUREMENT ±1/16" TOLERANCE

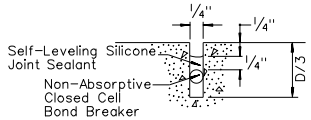

LONGITUDINAL WEAKENED PLANE JOINT SINGLE SAW CUT

NOTES:

1. ALL WEAKENED PLANE JOINTS SHALL BE SAWED PERPENDICULAR AS SHOWN, EXCEPT AS INDICATED IN THE STRUCTURE APPROACH DETAILS. WHEN ONLY ONE LANE IS BEING CONSTRUCTED ALONGSIDE EXISTING LANES, JOINTS SHALL BE SAWED AS DIRECTED BY THE ENGINEER.
2. SPACING OF WEAKENED PLANE JOINTS SHALL BE 15' EXCEPT AT REINFORCED STRUCTURE APPROACHES.
3. TRANSVERSE WEAKENED PLANE JOINTS SHALL BE AT LEAST 6' FROM ANY CONTACT JOINT.
4. LONGITUDINAL WEAKENED PLANE JOINTS SHALL BE CUT AT ALL LANE AND SHOULDER LINES EXCEPT WHERE LANE PLUS ADJACENT SHOULDER WIDTH IS LESS THAN OR EQUAL TO 16'.
5. ALL TRANSVERSE CONTACT JOINTS SHALL BE SAWED AND JOINT SEALER USED PER RESPECTIVE TRANSVERSE CONTACT JOINT DETAIL THIS SHEET.
6. ALL TIE BARS TO BE EPOXY COATED EXCEPT IN CLARK CO. TIE BARS TO BE PLACED IN MIDDLE 1/3 OF SLAB THICKNESS. TIE BARS SHALL NOT BE PLACED WITHIN 1' OF DOWEL BARS.
7. TRANSVERSE CONTACT JOINTS WITH DOWEL BARS SHALL BE USED AT ALL CONSTRUCTION JOINTS AND ELSEWHERE IF ORDERED BY THE ENGINEER.
8. PAVEMENT END ANCHORS SHALL BE CONSTRUCTED AS THE TERMINAL PANELS OF ALL PAVEMENT NOT ABUTTING EXISTING CONCRETE PAVEMENTS OR STRUCTURES, AND ELSEWHERE IF ORDERED BY THE ENGINEER.
9. INITIAL 1/8" WEAKENED PLANE JOINT SAW CUT TO BE DONE WITHIN SPECIFIED TIME LIMIT. RESERVOIR CUT SHALL BE DONE AT A LATER TIME.
10. RATIO OF DEPTH TO WIDTH OF JOINT SEALANT SHALL BE 1:1
11. DOWEL BARS SHALL BE LOCATED WITHIN 1" OF THE PLANNED TRANSVERSE AND DEPTH LOCATION AND WITHIN 2" OF THE PLANNED LONGITUDINAL LOCATION.
12. DOWEL BARS SHALL BE PARALLEL TO THE PAVEMENT SURFACE AND CENTERLINE WITHIN A TOLERANCE OF 1/2" IN 18".
13. DOWEL BARS SHALL NOT BE PLACED WITHIN 1' OF LONGITUDINAL JOINTS.
14. D = SLAB THICKNESS

PAVEMENT THICKNESS D IN.	DOWEL BAR DIA. d IN. MIN.	TIE BAR SIZE REBAR t	LENGTH OF TIE BAR L IN.
10	1 1/4"	No. 4	24
11	1 3/8"	No. 5	30
12 & 13	1 1/2"	No. 5	30

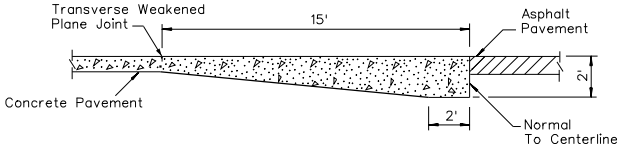

PAVEMENT END ANCHOR DETAIL
See Note 8

NEVADA DEPARTMENT OF TRANSPORTATION

DOWELED CONCRETE PAVEMENT DETAILS

Signed Original On File	R-10.1.2	(409)
CHIEF ROAD DESIGN ENGR.	ADOPTED 7/96	REVISION 10/98

R-12.1

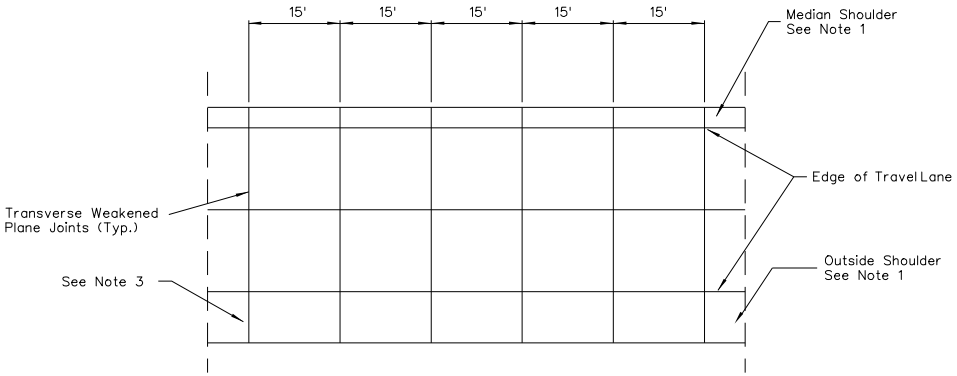

WEAKENED PLANE JOINTS LOCATION (DOWELED PAVEMENT ONLY)

Rumble Strip Shall Not Be Used In Urban Areas
For details not shown See Standard Plan Drawing R-10.1.2

NOTES:

1. SHOULDER TRANSVERSE JOINTS SHALL BE THE SAME PATTERN AS MAIN ROADWAY.
2. SEE TYPICAL SECTION FOR WIDTH OF SHOULDER AND LONGITUDINAL WEAKENED PLANE JOINT LOCATION.
3. SEE CONTRACT PLANS SPECIAL DETAIL FOR CONCRETE RUMBLE STRIPS.

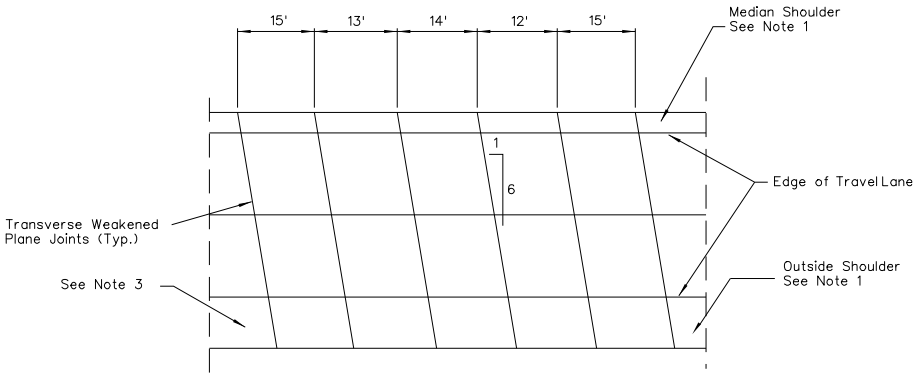

WEAKENED PLANE JOINTS LOCATION

Rumble Strip Shall Not Be Used In Urban Areas
For details not shown See Standard Plan Drawing R-10.1.1

NEVADA DEPARTMENT OF TRANSPORTATION

WEAKENED PLANE JOINTS
CONCRETE

Signed Original On File	R-10.1.3 (409)	
CHIEF ROAD DESIGN ENGR.	ADOPTED 7/96	REVISION 1/01

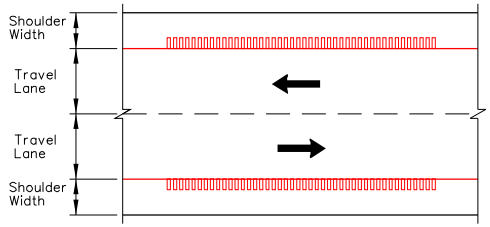

TWO WAY TRAFFIC LAYOUT

NOTES:

1. RUMBLE STRIPS SHALL BE USED ON ALL OUTSIDE SHOULDERS THAT ARE 4' WIDE OR WIDER ON BOTH RURAL AND RURAL DIVIDED HIGHWAYS. RUMBLE STRIPS SHALL BE USED ON ALL THE INSIDE SHOULDERS OF RURAL DIVIDED HIGHWAYS WITH SHOULDER WIDTH OF 2' OR MORE.
2. RUMBLE STRIPS SHALL NOT BE PLACED IN URBAN LOCATIONS, NOR ON RAMP SHOULDERS, BRIDGES, OR BRIDGE APPROACH SLABS, UNLESS SPECIFICALLY DESIGNATED IN THE PLANS.
3. RUMBLE STRIPS MAY BE CONTINUOUS THROUGH ALL MINOR APPROACHES, BUT SHALL BE OMITTED ACROSS PRINCIPAL INTERSECTING ROADWAYS.
4. RUMBLE STRIPS CAN BE PLACED ON EXISTING ROLLED IN RUMBLE STRIPS IF PRESENT.
5. FOR RAMPS AND STRUCTURES, SEE SHEET R-10.1.5.
6. ON CONCRETE PAVEMENTS, DUE TO TRANSVERSE JOINTS, RUMBLE STRIPS WILL REQUIRE A SPECIAL DETAIL.

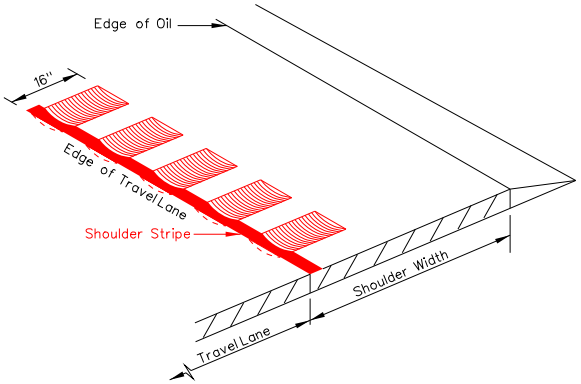

RUMBLE STRIP DETAIL

LEGEND:

- PLANTMIX BITUMINOUS SURFACE

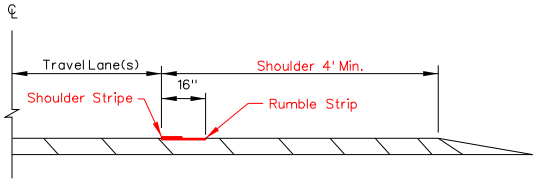

SHOULDER SECTION

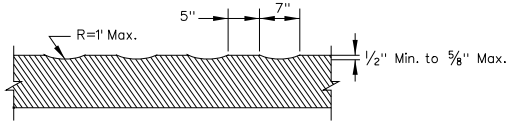

RUMBLE STRIP CORRUGATIONS
SECTION A-A

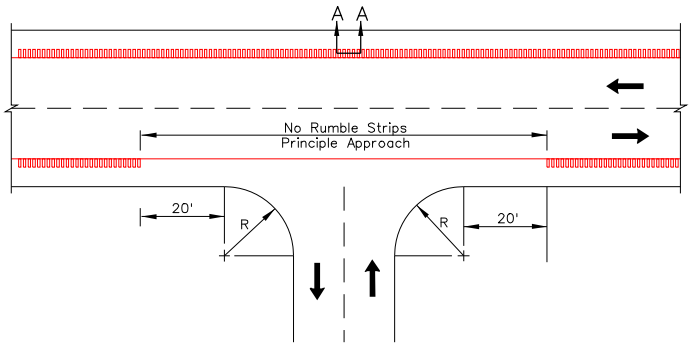

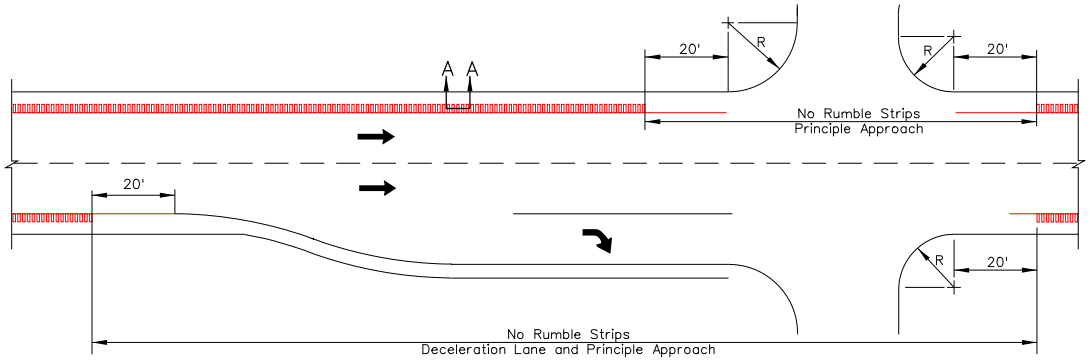

TYPICAL RUMBLE STRIP PLACEMENT

NEVADA DEPARTMENT OF TRANSPORTATION

RUMBLE STRIPS-RURAL
PLANTMIX BITUMINOUS
SURFACE

Signed Original On File	R-10.1.4	(403)
CHIEF ROAD DESIGN ENGR.	ADOPTED 1/01	REVISION 5/09

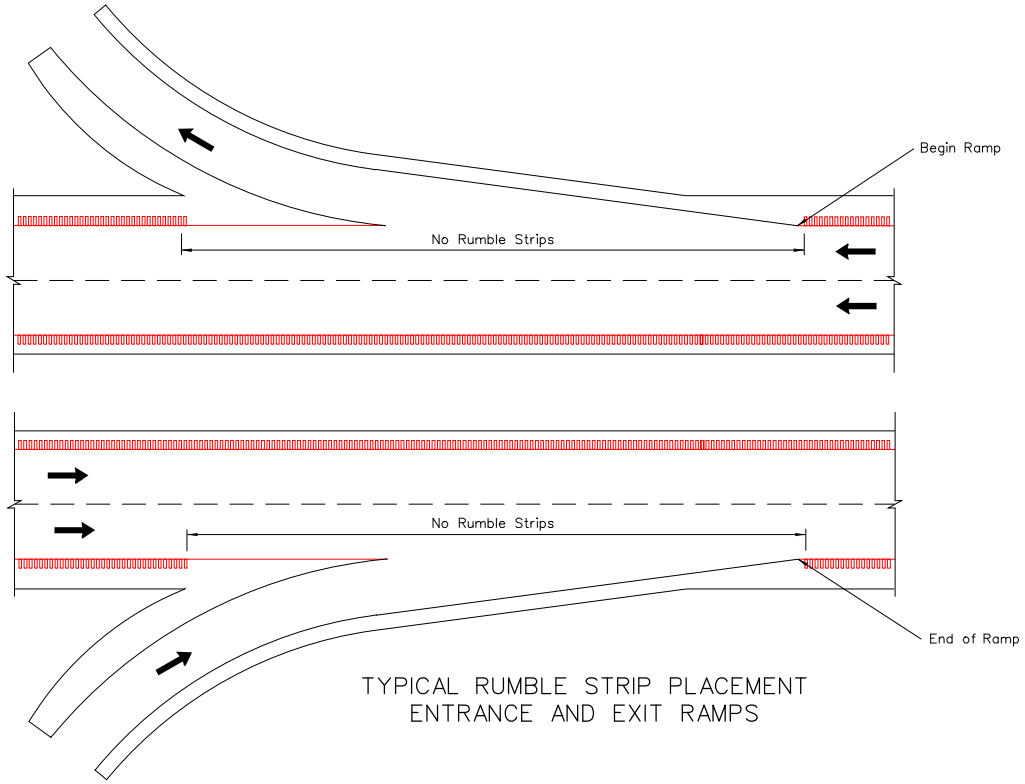

TYPICAL RUMBLE STRIP PLACEMENT
ENTRANCE AND EXIT RAMPS

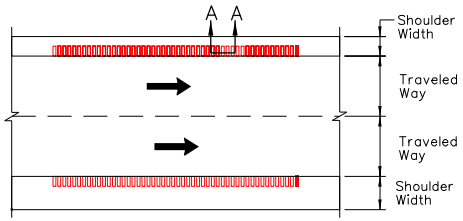

DIVIDED HIGHWAY LAYOUT

NOTES:

1. RUMBLE STRIPS SHALL BE USED ON ALL OUTSIDE SHOULDERS THAT ARE 4' WIDE OR WIDER ON BOTH RURAL AND RURAL DIVIDED HIGHWAYS. RUMBLE STRIPS SHALL BE USED ON ALL THE INSIDE SHOULDERS OF RURAL DIVIDED HIGHWAYS WITH SHOULDER WIDTH OF 2' OR MORE.
2. RUMBLE STRIPS SHALL NOT BE PLACED IN URBAN LOCATIONS, NOR ON RAMP SHOULDERS, BRIDGES, OR BRIDGE APPROACH SLABS, UNLESS SPECIFICALLY DESIGNATED IN THE PLANS.
3. RUMBLE STRIPS MAY BE CONTINUOUS THROUGH ALL MINOR APPROACHES, BUT SHALL BE OMITTED ACROSS PRINCIPAL INTERSECTING ROADWAYS.
4. RUMBLE STRIPS CAN BE PLACED ON EXISTING ROLLED IN RUMBLE STRIPS IF PRESENT.
5. FOR RURAL NON-FREEWAY HIGHWAYS, SEE STANDARD PLAN SHEET R-10.1.4.
6. ON CONCRETE PAVEMENTS, DUE TO TRANSVERSE JOINTS, RUMBLE STRIPS WILL REQUIRE A SPECIAL DETAIL.

LEGEND:

PLANTMIX BITUMINOUS SURFACE

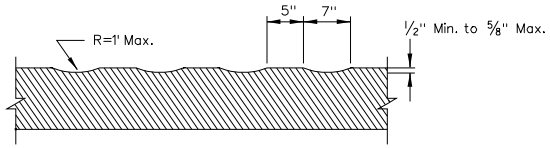

RUMBLE STRIP CORRUGATIONS
SECTION A-A

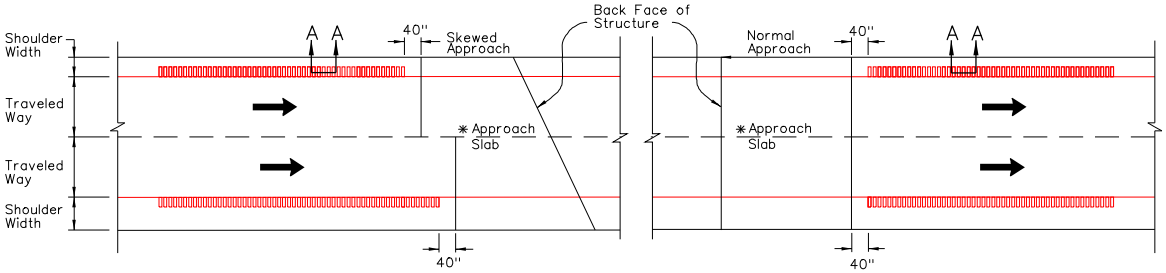

DIVIDED HIGHWAY LAYOUT AT BRIDGE STRUCTURE
* If No Approach Slab Then 40" From Back Face of Structure

NEVADA DEPARTMENT OF TRANSPORTATION

RUMBLE STRIPS
RAMPS/STRUCTURES

Signed Original On File	R-10.1.5	(403)
CHIEF ROAD DESIGN ENGR.	ADOPTED 1/01	REVISION

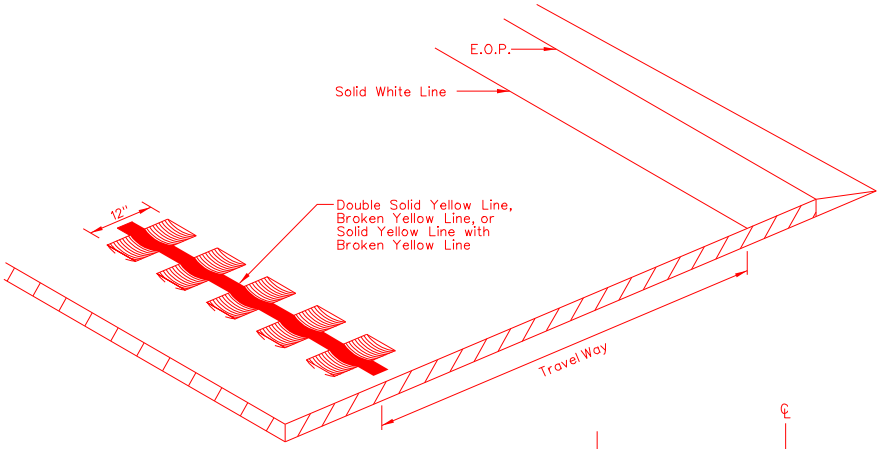

RUMBLE STRIP DETAIL

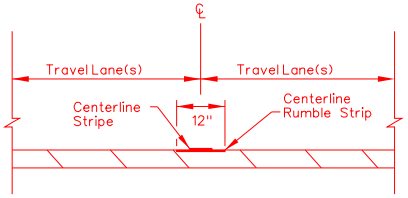

CENTERLINE SECTION

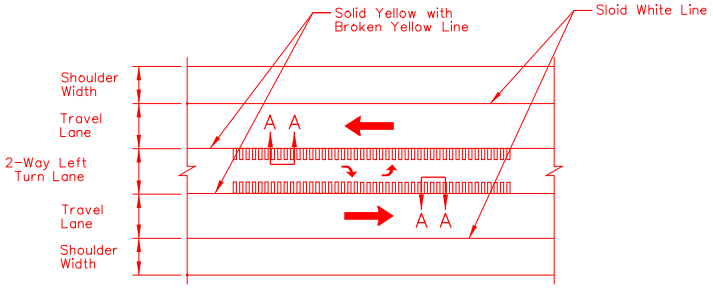

WITH TWO WAY LEFT TRUN

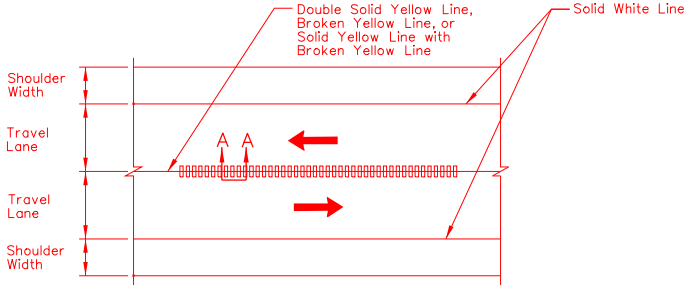

WITHOUT TWO WAY LEFT TURN

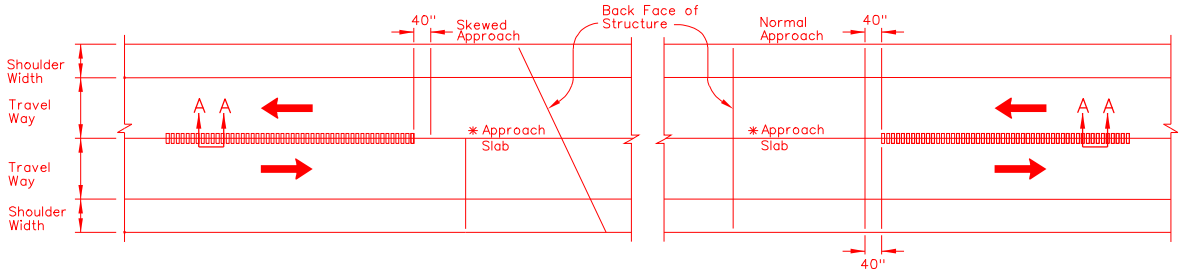

LAYOUT AT BRIDGE STRUCTURE

* If No Approach Slab Then 40" From Back Face of Structure

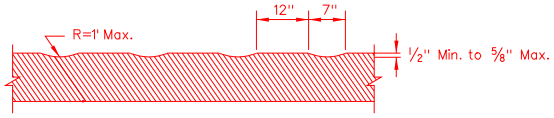

RUMBLE STRIP CORRUGATIONS
SECTION A-A

NOTES:

1. CENTERLINE RUMBLE STRIPS SHALL NOT BE PLACED IN URBAN LOCATIONS, NOR ON BRIDGES, RAILROAD R/W, OR BRIDGE APPROACH SLABS UNLESS SPECIFICALLY NOTED IN THE PLANS.
2. CENTERLINE RUMBLE STRIPS SHALL BE PLACED IN PASSING AND NON PASSING ZONES.
3. CENTERLINE RUMBLE STRIPS SHALL BE CONTINUOUS THROUGH ALL MINOR APPROACHES, BUT SHALL BE OMITTED ACROSS PRINCIPAL ARTERIAL INTERSECTING ROADWAYS AND MAJOR DRIVEWAYS WHERE THE CENTERLINE STRIPE HAS BEEN OMITTED.
4. CENTERLINE RUMBLE STRIPS MAY BE OMMITED WITHIN 1000' OF RESIDENCES.
5. STRIPING SHALL BE PLACED OVER THE CENTERLINE RUMBLE STRIPS.

LEGEND:

- PLANTMIX BITUMINOUS SURFACE

SHEET 1 OF 2

NEVADA DEPARTMENT OF TRANSPORTATION

CENTERLINE RUMBLE STRIP

Signed Original On File	R-10.1.6	(403)
CHIEF ROAD DESIGN ENGR.	ADOPTED 5/09	REVISION

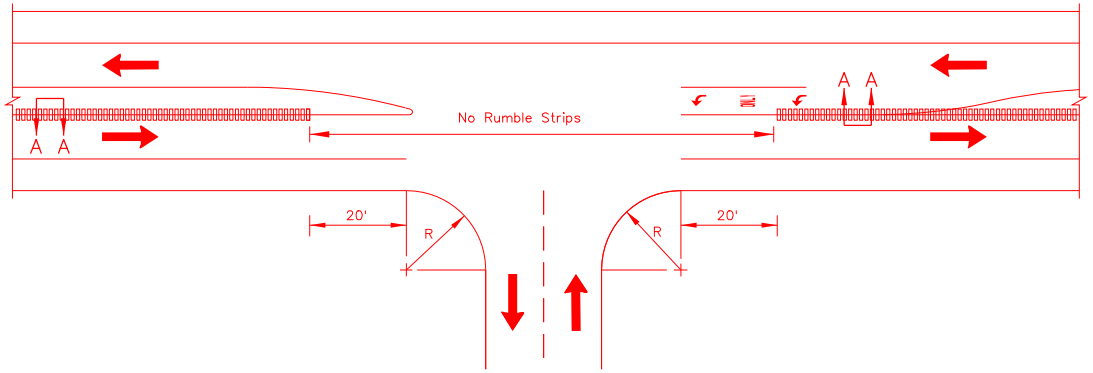

PRINCIPAL APPROACH WITH STORAGE LANE

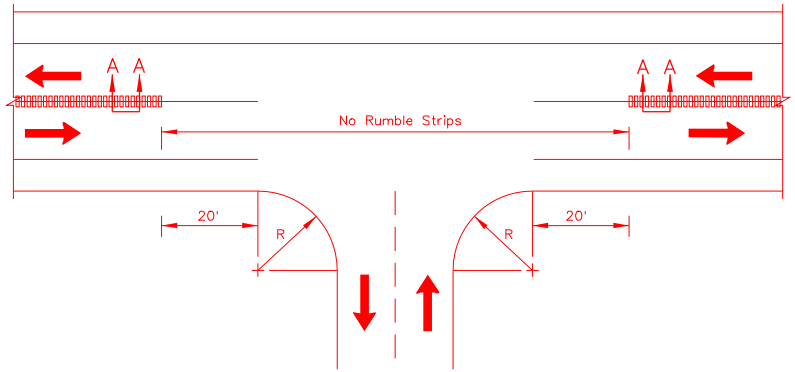

PRINCIPAL APPROACH WITHOUT STORAGE LANE

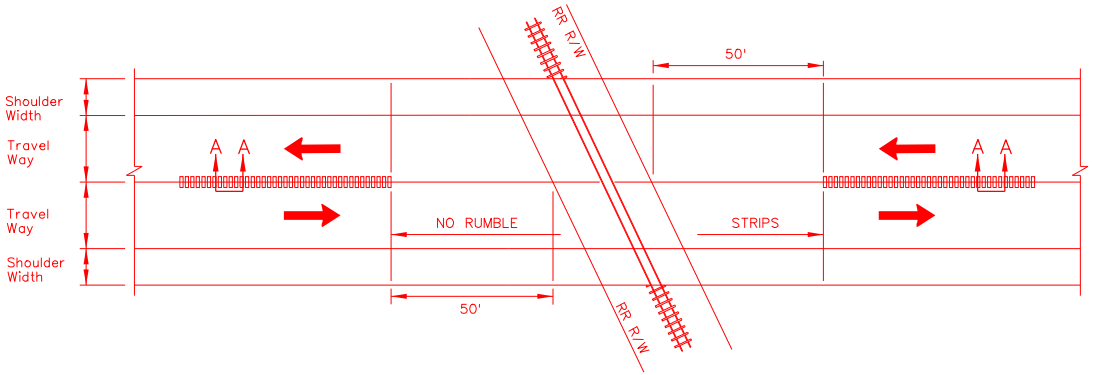

PRINCIPAL APPROACH WITH RAILROAD TRACKS

SHEET 2 OF 2

NEVADA DEPARTMENT OF TRANSPORTATION

CENTERLINE
RUMBLE STRIP

Signed Original On File	R-10.1.6.1	(403)
CHIEF ROAD DESIGN ENGR.	ADOPTED 5/09	REVISION

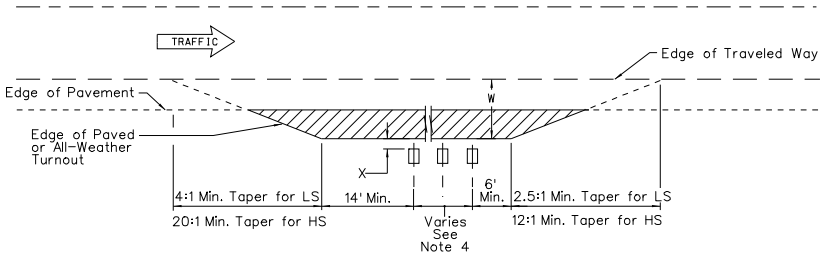

LS = Roads Carrying LOW speed Traffic and for Local and Collector Roads
HS = Roads Carrying HIGH Speed Traffic
W = For Suggested Widths See TABLE 1
X = For Mailbox Face Offset See TABLE 1 (0" TO 12")

MAILBOX TURNOUT

Through Road Speed M.P.H.	D_1 (feet)	
	$n v_c v_m \leq 4000$	$n v_c v_m > 4000$
40	70	200
≥55	70	300

D_4 (feet)	
Preferred	Minimum
150	90

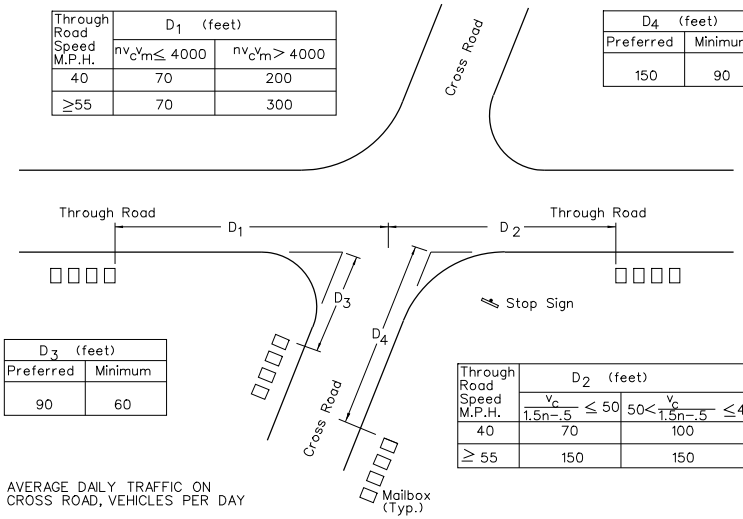

D_3 (feet)	
Preferred	Minimum
90	60

Through Road Speed M.P.H.	D_2 (feet)		
	$\frac{v_c}{1.5n-.5} \leq 50$	$50 < \frac{v_c}{1.5n-.5} \leq 400$	$\frac{v_c}{1.5n-.5} > 400$
40	70	100	100
≥ 55	150	150	200

v_c AVERAGE DAILY TRAFFIC ON CROSS ROAD, VEHICLES PER DAY

v_m AVERAGE DAILY TRAFFIC ON THROUGH ROAD, VEHICLES PER DAY

n NUMBER OF MAILBOXES AT MAIL STOP

MINIMUM CLEARANCE DISTANCES TO NEAREST MAILBOX IN MAIL STOPS AT INTERSECTIONS

TABLE 1	SUGGESTED GUIDELINES FOR LATERAL PLACEMENT OF MAILBOXES				
HIGHWAY TYPE AND TRAFFIC CONDITIONS	WIDTH (W) OF ALL-WEATHER SURFACE OF TURNOUT OR AVAILABLE SHOULDER AT MAILBOX		DISTANCE (X) ROADSIDE FACE OF MAILBOX IS TO BE OFFSET BEHIND EDGE OF TURN OUT OR USABLE SHOULDER		DEPTH BASE AGGREGATE
RURAL HIGHWAY	PREFERRED (FT.)	MINIMUM (FT.)	PREFERRED (INCH)	MINIMUM (INCH)	(INCH)
ADT= OVER 10000 vpd	> 12	12	8 TO 12	0	4
ADT= 1,500 TO 10,000 vpd	12	10	8 TO 12	0	4
ADT= 100 TO 1500 vpd	10	8	8 TO 12	0	4
RURAL ROAD ADT= UNDER 100 vpd - OR - RESIDENT STREET WITHOUT CURB OR ALL WEATHER SHOULDER	8	6**	8 TO 12	8*	4
RESIDENTIAL STREET CURBED	N/A	N/A	8 TO 12 BEHIND TRAFFIC FACE OF CURB	6 BEHIND TRAFFIC FACE OF CURB	0

* IF TURNOUT IS PROVIDED, THIS MAY BE REDUCED TO ZERO.
** RESIDENTIAL STREET WITHOUT CURB MAY BE REDUCED TO ZERO.

NOTES:

1. FOR FURTHER INFORMATION ON MAILBOXES SEE AASHTO "A GUIDE FOR ERECTING MAILBOXES ON HIGHWAYS, 1994 EDITION.
2. MAILBOXES WITHIN THE CLEAR ZONE SHALL BE THE TYPES SHOWN IN SHEETS R-12.1.2 AND R-12.1.3 OR AN APPROVED EQUAL.
3. ADT = AVERAGE DAILY TRAFFIC, vpd = VEHICLES PER DAY.
4. FOR MAILBOX SPACING AND VARIABLE LENGTH SEE SHEETS R-12.1.2 AND R-12.1.3.
5. TURNOUT QUANTITIES IN PLAN SUMMARY SHEETS.
6. MILLED MATERIAL MAY BE USED IN LIEU OF AGGREGATE BASE.
7. INSTALL MAILBOXES ON FLAT SURFACE WITHOUT UNDULATIONS.

NEVADA DEPARTMENT OF TRANSPORTATION

MAILBOX TURNOUTS

Signed Original On File	R-12.1.1	(214)
CHIEF ROAD DESIGN ENGR.	ADOPTED 7/96	REVISION 4/04

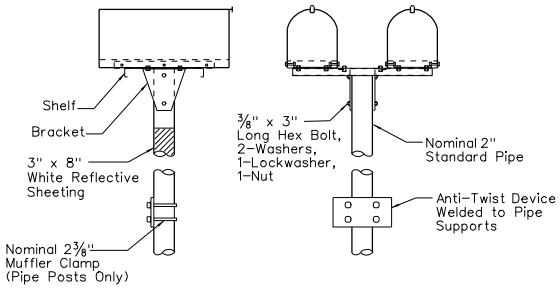

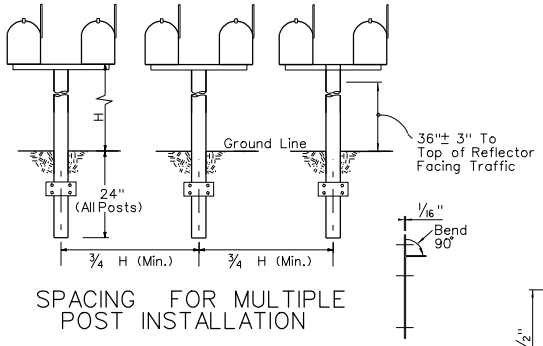

SPACING FOR MULTIPLE POST INSTALLATION

U-BOLT CLAMP

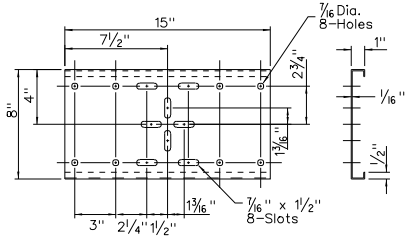

SHELF

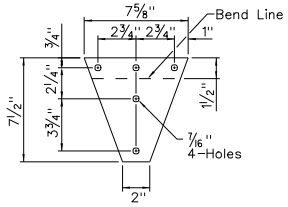

BRACKET

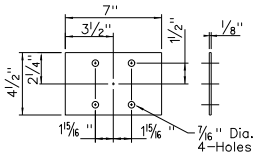

ANTI-TWIST PLATE

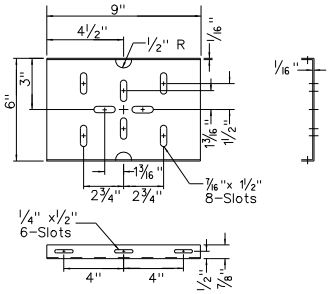

PLATFORM

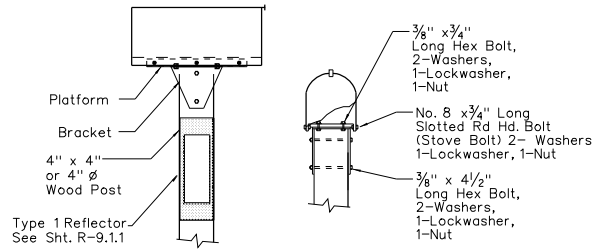

SINGLE AND DOUBLE MAILBOX ASSEMBLIES
TYPE A – WOODEN POST or PIPE POST

NOTES:

1. H = 3'–6" MIN., 4' MAX.
2. SEE STRUCTURE LIST FOR MAILBOX TYPES.
3. REFER TO SHEET R-12.1.1 TABLE 1 FOR SUGGESTED GUIDELINES FOR LATERAL PLACEMENT OF MAILBOXES.
4. INSTALL MAILBOXES ON FLAT SURFACE WITHOUT UNDULATIONS.

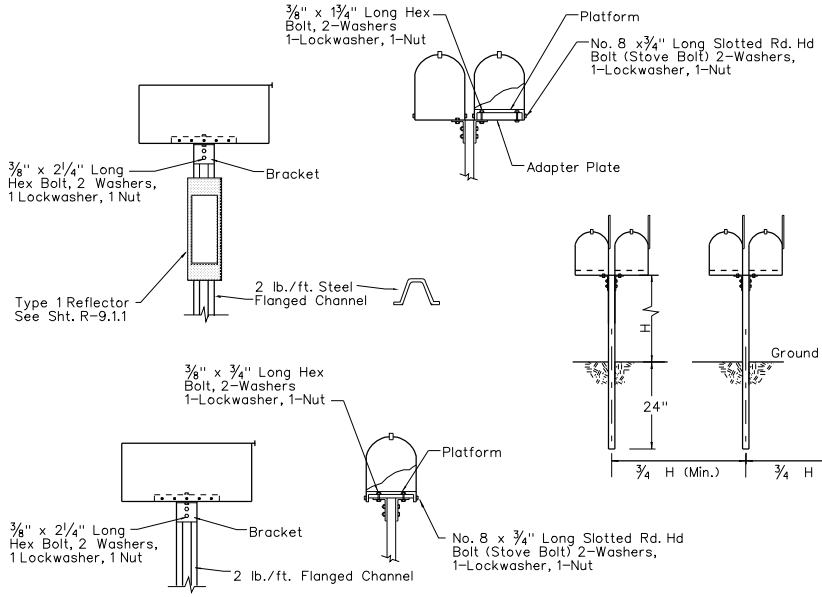

SINGLE AND DOUBLE MAILBOX ASSEMBLIES
TYPE B – METAL POSTS

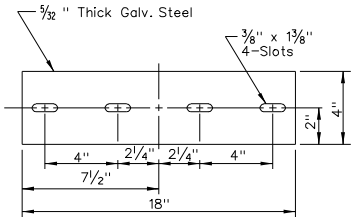

ADAPTER PLATE
For Double Installations

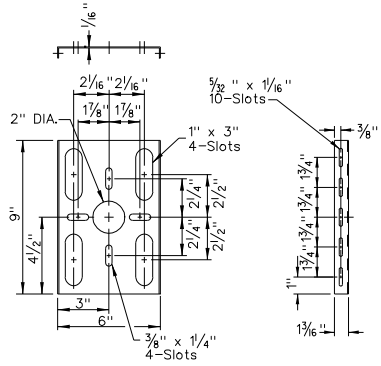

PLATFORM

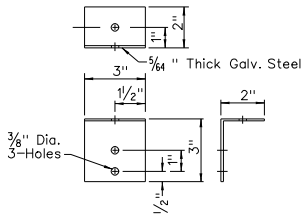

POST MOUNTING ANGLE
For Mounting Mailboxes To Post
2 Required Per Post

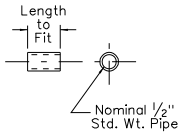

SPACER

NEVADA DEPARTMENT OF TRANSPORTATION

MAILBOX SUPPORTS

Signed Original On File	R-12.1.2	(214)
CHIEF ROAD DESIGN ENGR.	ADOPTED 7/96	REVISION 4/04

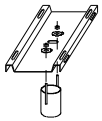

SINGLE MAILBOX MOUNT

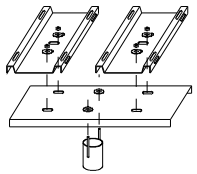

DOUBLE MAILBOX MOUNT

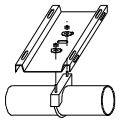

MULTIPLE MAILBOX MOUNT

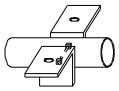

BRACKET MOUNT ALTERNATIVE

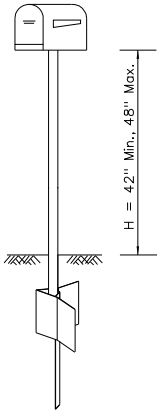

SINGLE SUPPORT SYSTEM

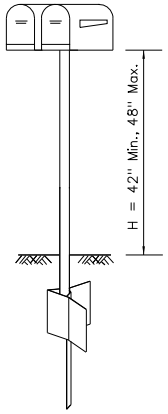

DOUBLE SUPPORT SYSTEM

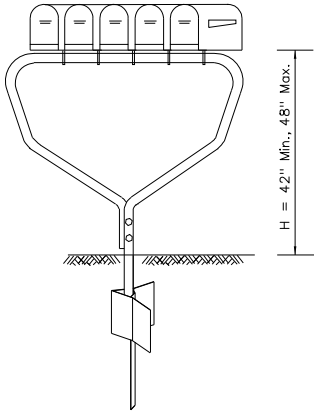

MULTIPLE SUPPORT SYSTEM

NOTES:

1. FOR FURTHER INFORMATION ON MAILBOXES SEE AASHTO "A GUIDE FOR ERECTING MAIL BOXES ON HIGHWAYS", 1994 EDITION.
2. INSTALLATION OF TYPE C MAILBOX ASSEMBLIES SHALL BE IN ACCORDANCE WITH MANUFACTURER'S INSTRUCTIONS.
3. THE DIRECTION OF THE MAILBOX OPENING IN RELATION TO THE TRAVEL LANES SHALL BE SET BY THE U.S. POSTAL SERVICE.
4. 3" x 8" WHITE REFLECTORIZED SHEETING SHALL BE PLACED FACING TRAFFIC 36" +/- 3" FROM GROUND ON ALL MAILBOX SUPPORT STRUCTURES.
5. LIGHTWEIGHT NEWSPAPER BOXES MAY BE MOUNTED BELOW THE MAILBOX ON THE MAILBOX SUPPORT.
6. HEAVY GAUGE STEEL MAILBOXES (11lb) ARE NOT ALLOWED ON HIGH-SPEED HIGHWAYS.
7. INSTALL MAILBOXES ON FLAT SURFACE WITHOUT UNDULATIONS.

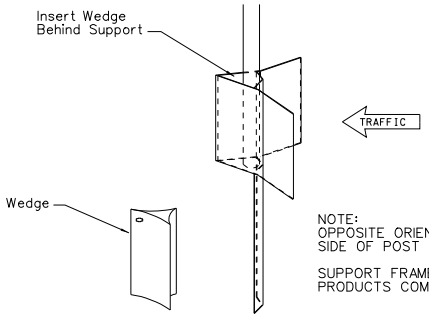

NOTE:
OPPOSITE ORIENTATION WITH WEDGE ON TRAFFIC APPROACH SIDE OF POST IS ALLOWABLE BUT NOT PREFERRED

SUPPORT FRAME AND FOUNDATION ARE PROPRIETARY PRODUCTS COMMERCIALLY AVAILABLE.

SINGLE AND MULTIPLE MAILBOX ASSEMBLIES
TYPE C

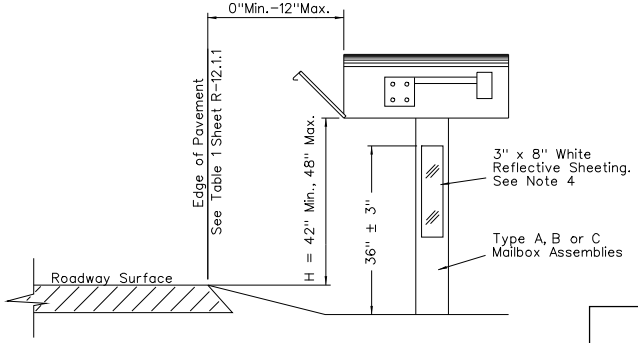

ALTERNATE PLACEMENT
SEE NOTE 3

NEVADA DEPARTMENT OF TRANSPORTATION

MAILBOX SUPPORTS

Signed Original On File	R-12.1.3	(214)
CHIEF ROAD DESIGN ENGR.	ADOPTED 7/96	REVISION 6/04

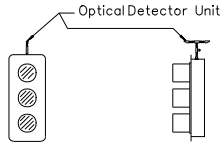

FRONT VIEW SIDE VIEW

MOUNTING DETAIL
OPTICAL DETECTOR

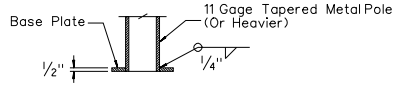

SECTION B-B WITH PIPE

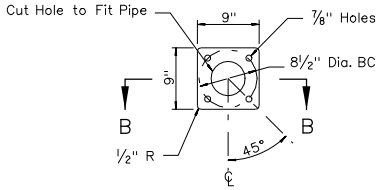

DETAIL F

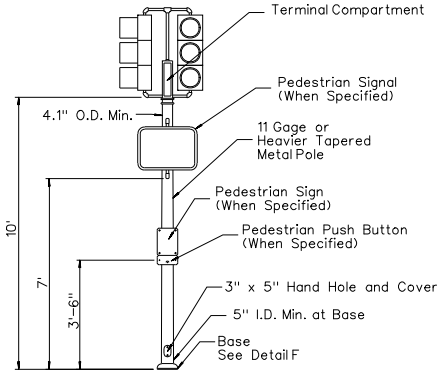

TYPE 1-A
Foundation Same as Type 1-B

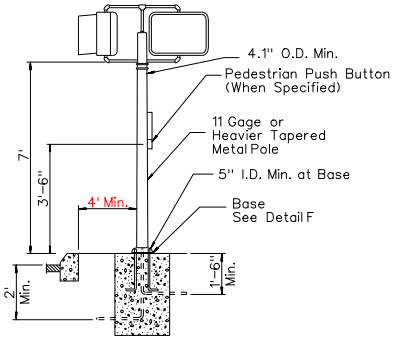

TYPE 1-B

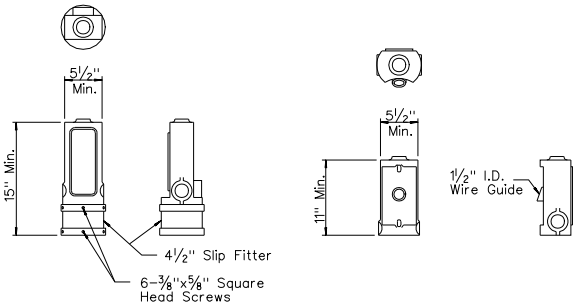

POST TOP MOUNTED SIDE BRACKET MOUNTED

TERMINAL COMPARTMENTS

NOTES:

1. For Pedestrian Push Button and Sign See Sheet T-30.1.3.
2. For Foundation Details See Sheet T-30.1.16.
3. Mounting Heights of Signal and Pedestrian Heads and Pedestrian Push Buttons Shall Be Applicable to Installations on Pole Types 28, 30 & 35.

NEVADA DEPARTMENT OF TRANSPORTATION

TYPE 1A AND 1B POLES, OPTICAL MOUNT AND TERMINAL COMPARTMENTS

Signed Original On File	T-30.1.2	(623)
CHIEF SAFETY/TRAFFIC ENGR.	ADOPTED 2/71	REVISION 5/09

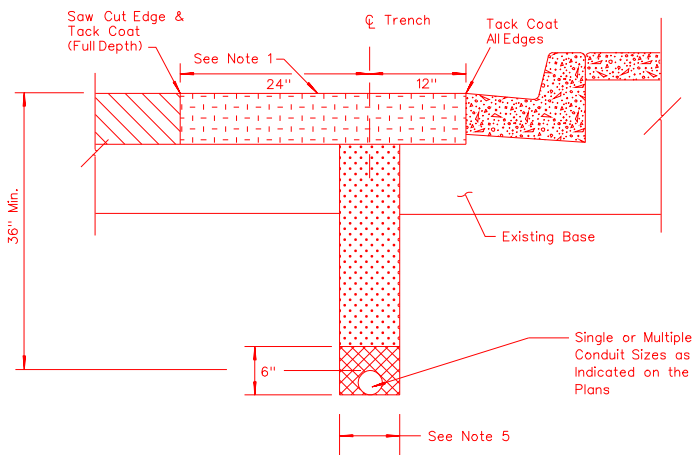

LONGITUDINAL

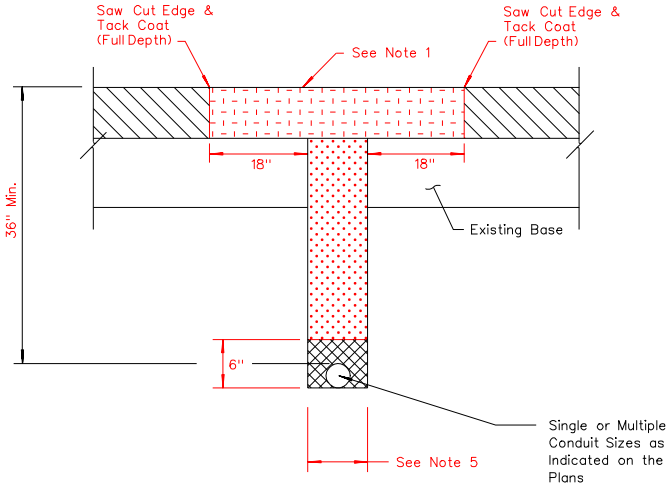

TRANSVERSE

TRENCHING IN PAVEMENT

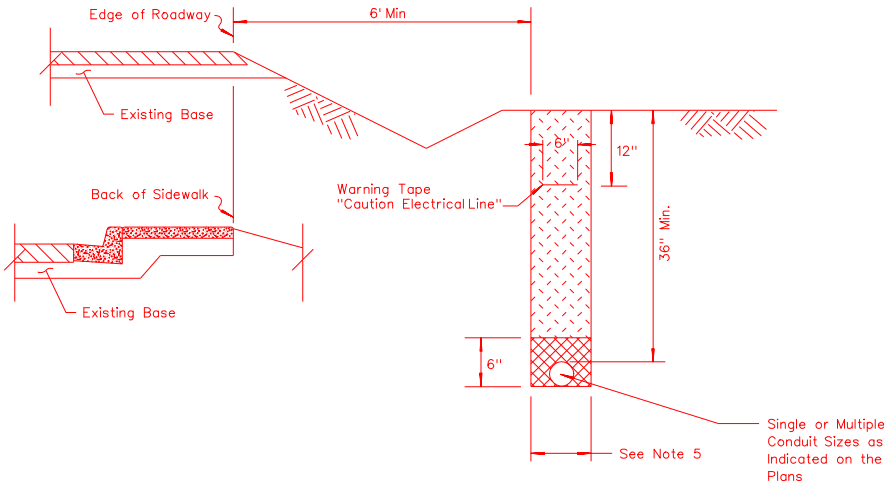

TRENCHING IN NATIVE SOIL

NOTES:

1. REMOVE EXISTING PAVEMENT AND REPLACE WITH NEW APPROVED MATERIAL OF SAME TYPE. MATCH EXISTING PAVEMENT DEPTH BUT NOT LESS THAN 6", AND SEAL NEW SURFACE AS DIRECTED BY THE ENGINEER.
2. RECOMPACT EXISTING BASE MATERIAL AROUND TRENCH TO MEET COMPACTION REQUIREMENTS FOR THAT MATERIAL TYPE AND LOCATION.
3. NEW ASPHALT AND CONCRETE PAVEMENT MATERIAL MUST BE APPROVED BY THE ENGINEER AND OBTAINED FROM AN APPROVED SOURCE.
4. UNLESS OTHERWISE PROVIDED FOR IN THE BASE AND SURFACE SUMMARIES NEW PAVEMENT MATERIAL AND TRENCHING SHALL NOT BE PAID FOR DIRECTLY BUT INCLUDED IN THE PRICE FOR THE CONDUIT.
5. TOTAL TRENCH WIDTH SHALL BE 6" WIDER THAN THE OUTSIDE EDGES OF CONDUIT(S) INSTALLED. USE CONDUIT SPACERS TO SEPARATE MULTIPLE CONDUITS IN TRENCH BY AT LEAST 1". PLACE SPACERS AT INTERVALS OF 5' MAXIMUM. CONDUITS SHALL BE CENTERED IN TRENCH.
6. FOR TRENCHING IN A NON-NDOT-OWNED FACILITY USE THE OWNER'S STANDARDS FOR TRENCHING, COMPACTION, AND PATCHING.
7. LONGITUDINAL TRENCHING IN SHOULDER: IF SHOULDER IS 4' WIDE OR LESS, REMOVE ALL SURFACE MATERIAL FROM EDGE OF OIL TO SHOULDER STRIPE AND REPLACE.
8. ENGINEER MAY FOR GOOD CAUSE, REQUIRE WIDER PATCH SECTIONS OR OTHERWISE ALTER THE REQUIREMENTS.
9. IF SAW CUT IS WITHIN 2' OF AN EXISTING PAVEMENT EDGE OR EXISTING PAVEMENT PATCH, REMOVE EXISTING PAVEMENT TO THAT EDGE AND REPLACE ENTIRE SECTION
10. IF SAWCUT EDGES FOR TRENCH FALL WITHIN A WHEEL PATH, SAWCUT SHALL BE EXTENDED TO, AND REMOVAL MADE TO EDGE OF THE TRAVEL LANE. OPTIONALLY THE ENTIRE TRAVEL LANE CAN BE ROTOMILLED TO A DEPTH OF 2" AND OVERLAYED WITH 2" OF BITUMINOUS PLANTMIX AS DIRECTED BY THE ENGINEER.
11. CONTRACTOR SHALL BE RESPONSIBLE FOR REPLACEMENT OF LOOP DETECTORS, ADJUSTMENTS OF UTILITIES AND SURVEY MONUMENTS TO GRADE AND INSTALLATION OF TEMPORARY PAVEMENT MARKINGS.
12. PERMANENT RESURFACING SHALL NOT BE PLACED ON TRENCHES BACKFILLED WITH CONCRETE SLURRY FOR A MINIMUM OF 7 DAYS AFTER PLACEMENT OF THE CONCRETE SLURRY OR SIMILAR MATERIAL. PROVIDE TEMPORARY COVER OR BACKFILL AS DIRECTED BY THE ENGINEER.
13. USE OF ROCK WHEEL TRENCHING MACHINES OR SIMILAR EQUIPMENT WILL NOT BE PERMITTED WITHIN PAVED AREAS OR WITHIN 1' OF THE EDGE OF PAVING.
14. SAND BEDDING SHALL CONFORM TO GRADATION REQUIREMENTS IN SUBSECTION 706.03.03 FINE AGGREGATES.
15. IF INSTALLING UNDERGROUND ELECTRICAL FACILITIES OR SUPPLIES REFER TO NAC 408.447 AND 408.453.
16. BACKFILL IN ACCORDANCE WITH SECTION 207 IF WITHIN THE ROADSIDE SLOPE OR DITCHES. OTHERWISE THE BACKFILL MAY BE ACCOMPLISHED WITH NATIVE MATERIAL COMPACTED TO 90% OR AS DIRECTED BY THE ENGINEER.

LEGEND:

- Existing Pavement
- Limits of Removal & Repair of Pavement
- Sand Bedding (See Note 14)
- Class A Slurry Cement Backfill
- Backfill

NEVADA DEPARTMENT OF TRANSPORTATION

TRAFFIC CONDUIT
TRENCHING DETAIL

Signed Original On File	T-30.1.2.1	(623)
CHIEF SAFETY/TRAFFIC ENGR.	ADOPTED 2/71	REVISION 5/09

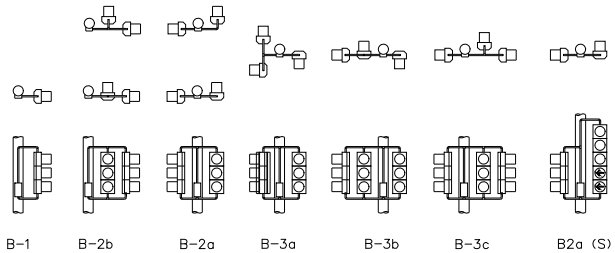

SIDE BRACKET MOUNTINGS

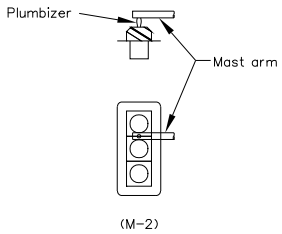

MAST ARM MOUNTINGS

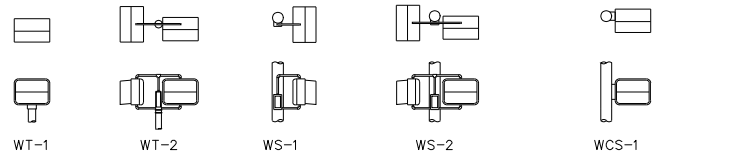

TOP MOUNTINGS SIDE MOUNTINGS CLAMSHELL MOUNT

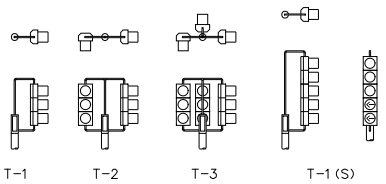

TOP MOUNTINGS

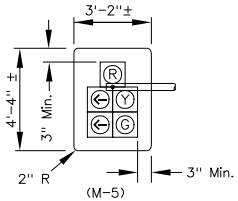

MAST ARM MOUNT
M-2 Mount

VEHICULAR SIGNALS AND MOUNTINGS

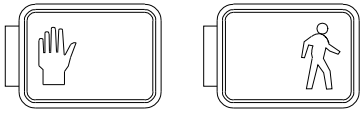

PEDESTRIAN SIGNAL-INTERNATIONAL SYMBOL
To Be Used Unless Otherwise Specified

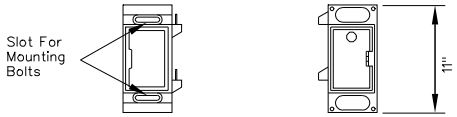

POLE PLATE TERMINAL COMPARTMENT

CLAMSHELL MOUNTING HARDWARE (CS)
PEDESTRIAN SIGNALS AND MOUNTINGS
To Be Used Only When Specified

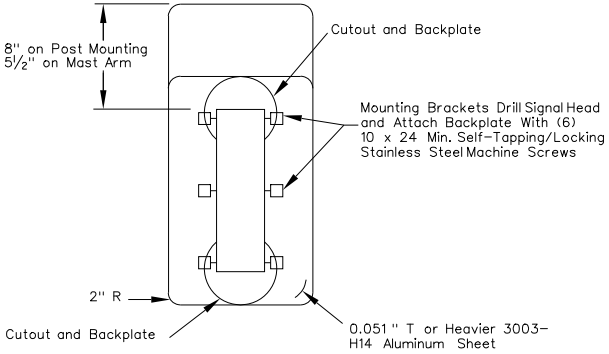

REAR VIEW BACKPLATE

No Background Light to Show Between Plate and Head.
All Mast Arm Backplates Shall Be Louvered.

NOTES:

1. ALL SIGNAL HEADS SHALL HAVE BACKPLATES.
2. ALL SIGNAL HEADS SHALL HAVE HOODS. HOODS SHALL BE TUNNEL TYPE, OPEN AT THE BOTTOM.
3. T=THICKNESS.

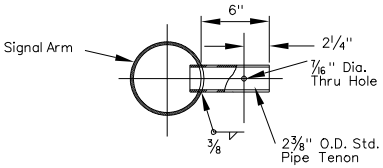

M-2 SIDE MOUNT

See Detail For Mounting Signal Head
On Standard Plan T-30.1.15

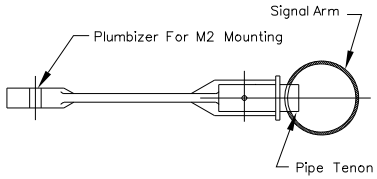

SPECIAL DETAIL
FOR MOUNTING SIGNAL HEAD

NEVADA DEPARTMENT OF TRANSPORTATION

SIGNAL MOUNTING
PEDESTRIAN SIGNALS

Signed Original On File	T-30.1.3	(623)
CHIEF SAFETY/TRAFFIC ENGR.	ADOPTED 7/96	REVISION 6/00

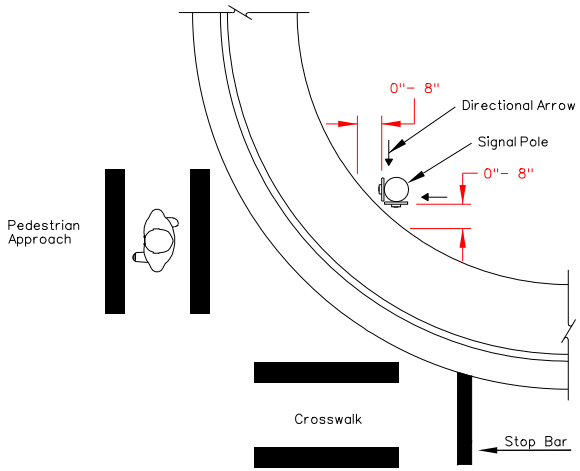

Pedestrian Push Buttons Shall Be Installed on the Crosswalk Side of the Signal Pole, With the Proper Directional Arrow Positioned Correctly.

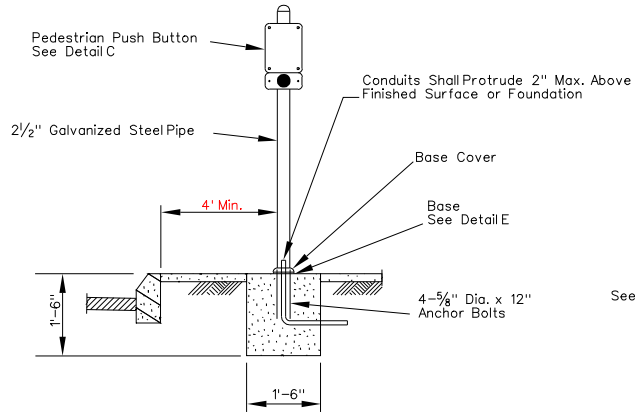

PEDESTRIAN PUSH BUTTON POST

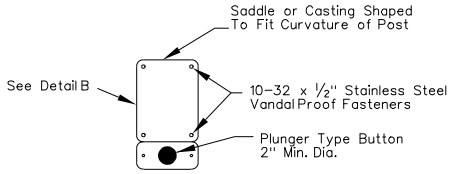

DETAIL C

DETAIL B

NOTES:

1. ARROW TO BE LEFT OR RIGHT OR BOTH AS REQUIRED.
2. PORCELAIN ENAMELED, 9" x 12" SIGN, BLACK SYMBOLS ON WHITE BACKGROUND.

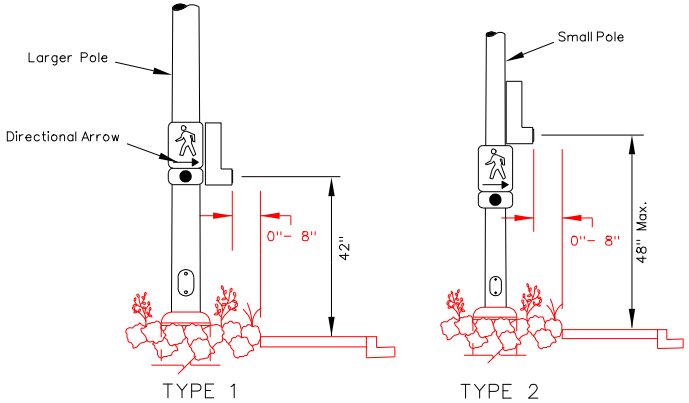

TYPE 1 TYPE 2

TYPE 1– Position Pedestrian Push Buttons on Signal Pole When the Width of the Pole Allows (2) Pedestrian Heads to Be Mounted At the Same Height.

TYPE 2– Position Pedestrian Push Buttons on Signal Pole When the Width of the Pole Does Not Allow (2) Pedestrian Heads to Be Mounted At the Same Height. Mount Lower Push Button as High as Possible.

PUSH BUTTON POSITIONING DETAIL

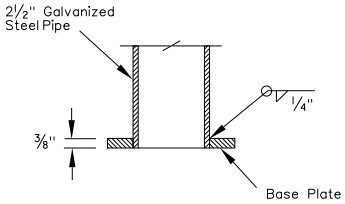

SECTION A–A WITH PIPE

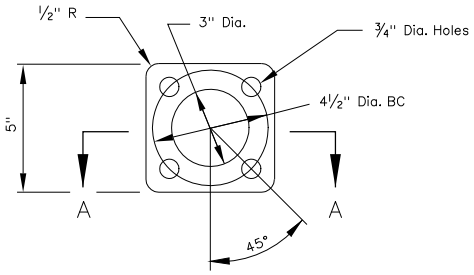

DETAIL E

NEVADA DEPARTMENT OF TRANSPORTATION

PEDESTRIAN PUSH BUTTON DETAILS

Signed Original On File	T-30.1.3.1	(623)
CHIEF SAFETY/TRAFFIC ENGR.	ADOPTED 8/98	REVISION 5/09

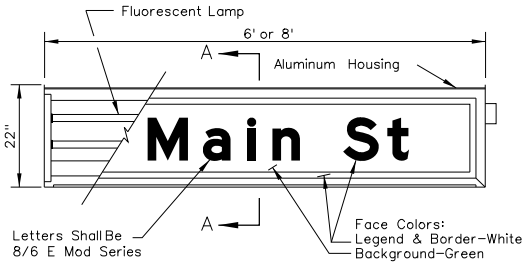

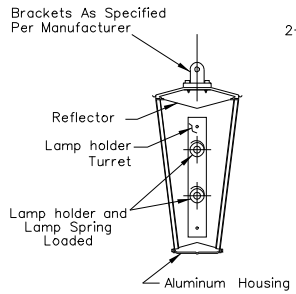

SECTION A-A

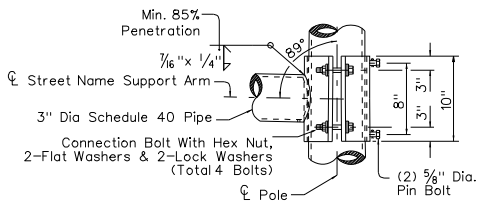

ELEVATION

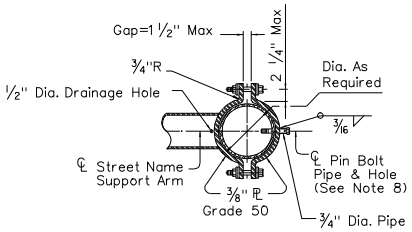

SECTION

DETAIL B
CLAMP-ON CONNECTION
See Note 7

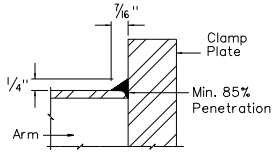

DETAIL
ARM BASE WELD

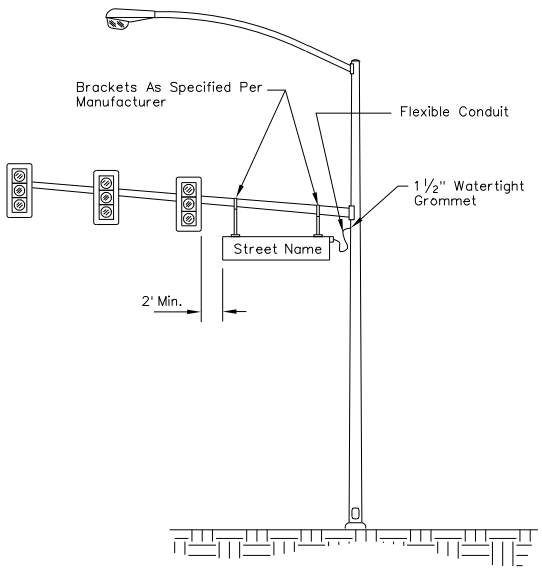

INSTALLATION METHOD 1

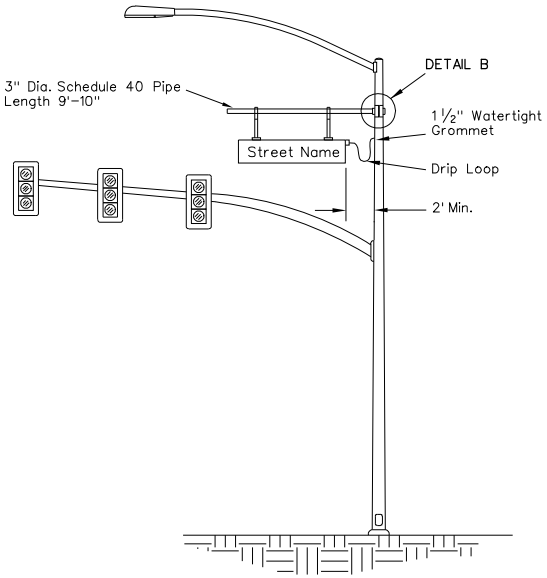

INSTALLATION METHOD 2

NOTES:

1. ALL FASTENERS AND ASSOCIATED HARDWARE SHALL BE STAINLESS STEEL.
2. TWO(2) NO. 12 AWG CONDUCTORS SHALL BE INSTALLED BETWEEN THE INTERNALLY ILLUMINATED STREET NAME SIGN AND THE POLE LUMINAIRE. THE PHOTO ELECTRIC (PE) CONTROL FOR THE LUMINAIRE OR ELECTRICAL SERVICE WILL OPERATE THE INTERNALLY ILLUMINATED SIGN.
3. THE BALLAST WILL BE, HIGH OUTPUT, "VALMONT NO. 6G3934WF" OR EQUIVALENT. BALLASTS SHALL BE ENCASED AND POTTED.
4. FLUORESCENT LIGHTING WILL BE PROVIDED BY 2-800MA STANDARD LAMPS. FLUORESCENT SOCKETS WILL BE D-DIE SNAP-IN TYPE SOCKETS WITH A RUBBER GASKET ON THE LAMP MATING SURFACE TO PREVENT POSSIBLE WATER DAMAGE.
5. WIRE CONNECTIONS WILL BE MADE WITH INSULATED COMPRESSION WIRE NUTS.
6. STREET NAME SIGN WIRING TO RUN THROUGH TWO(2) WATER-TIGHT 90° FITTINGS WITH FLEXIBLE CONDUIT. USE A DRIP LOOP SUFFICIENT ENOUGH TO ALLOW SIGN MOVEMENT. USE WATERTIGHT RUBBER GROMMET OR BUSHING AT POLE ENTRY.
7. CLAMP-ON DETAILS SHALL BE USED FOR INTERNALLY ILLUMINATED STREET NAME SIGN SUPPORT ARM ASSEMBLY.
8. PIN BOLTS SHALL BE A325 WITH THREADS EXCLUDED FROM THE SHEAR PLANE. PIN BOLT AND 3/4" DIAMETER PIPE SHALL HAVE 3/16" DIAMETER HOLES FOR A 1/8" DIAMETER GALVANIZED COTTER PIN. BACK CLAMP PLATE SHALL BE FURNISHED WITH A 3/4" DIAMETER HOLE FOR EACH PIN BOLT. AN 11/16" DIAMETER HOLE FOR EACH PIN BOLT SHALL BE FIELD DRILLED THROUGH THE POLE AFTER ARM ORIENTATION HAS BEEN APPROVED BY THE ENGINEER.

NEVADA DEPARTMENT OF TRANSPORTATION

INTERNALLY ILLUMINATED
STREET NAME
SIGNS

Signed Original On File	T-30.1.3.2	(623)
CHIEF SAFETY/TRAFFIC ENGR.	ADOPTED 8/98	REVISION 12/02

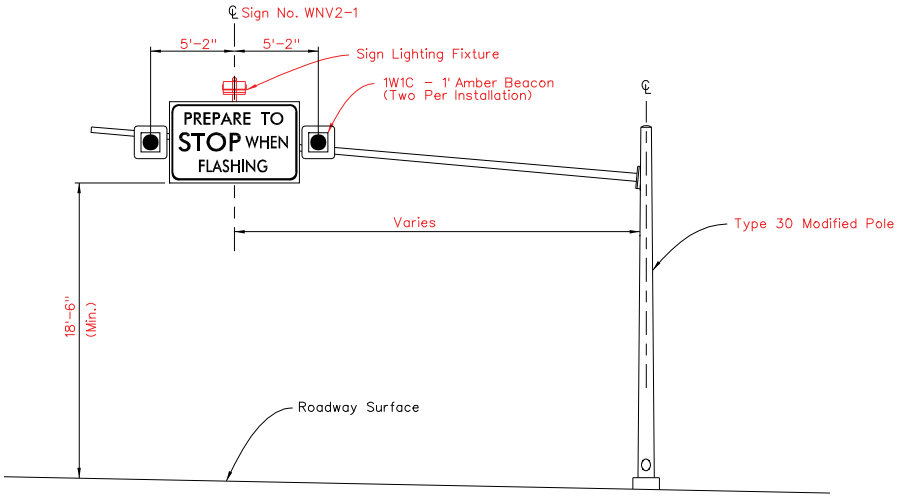

FLASHING WARNING SIGN DETAIL

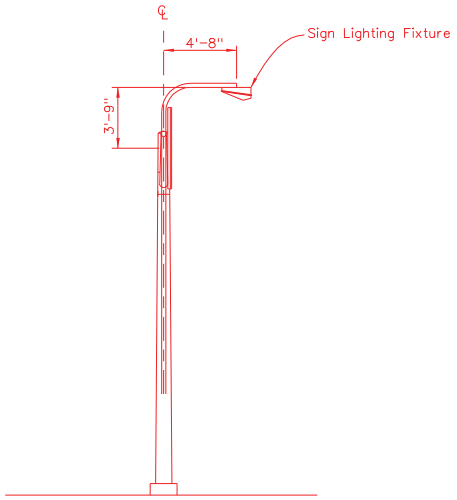

SIDE ELEVATION

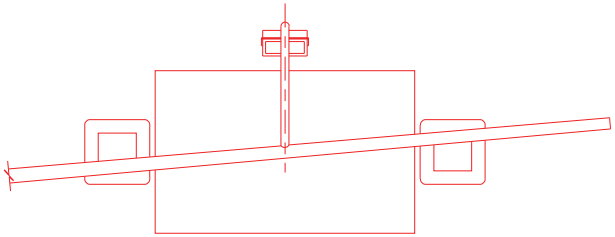

BACK VIEW

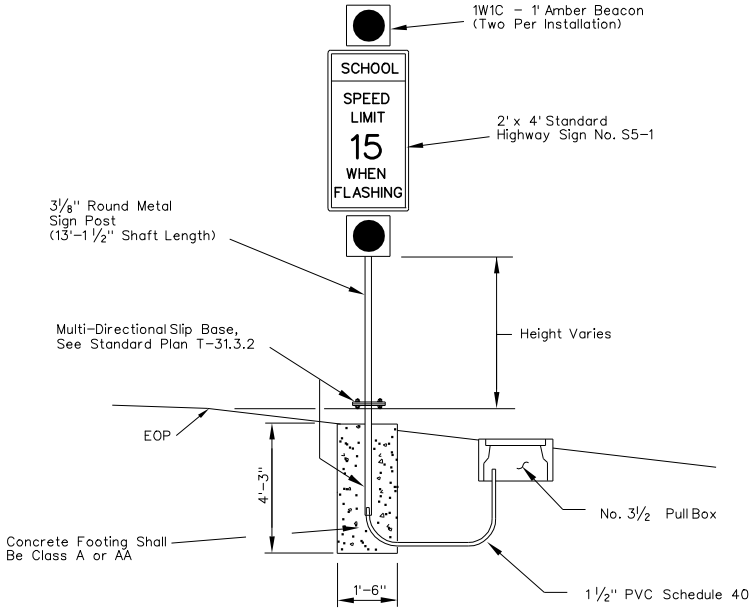

SCHOOL ZONE FLASHER DETAIL

NOTES:

1. LOCATE WNV2-1 SIGN VERTICALLY ON MAST ARM NO LOWER THAN 18'-6" FROM THE ROADWAY SURFACE. DISTANCE IS MEASURED FROM THE BOTTOM EDGE OF THE SIGN TO THE ACTUAL TRAVEL LANE SURFACE. LOCATE THE SIGN HORIZONTALLY ON MAST ARM CENTERED OVER THE TRAVEL LANES.
2. SUBMIT SHOP DRAWINGS AND STRUCTURAL CALCULATIONS ON THE POLE, MAST ARM, SIGN LIGHTING FIXTURE MOUNT AND CONNECTIONS FOR APPROVAL.

NEVADA DEPARTMENT OF TRANSPORTATION

FLASHING WARNING SIGN/
SCHOOL ZONE FLASHER

Signed Original On File	T-30.1.3.3 (623)	
CHIEF SAFETY/TRAFFIC ENGR.	ADOPTED 8/98	REVISION 5/09

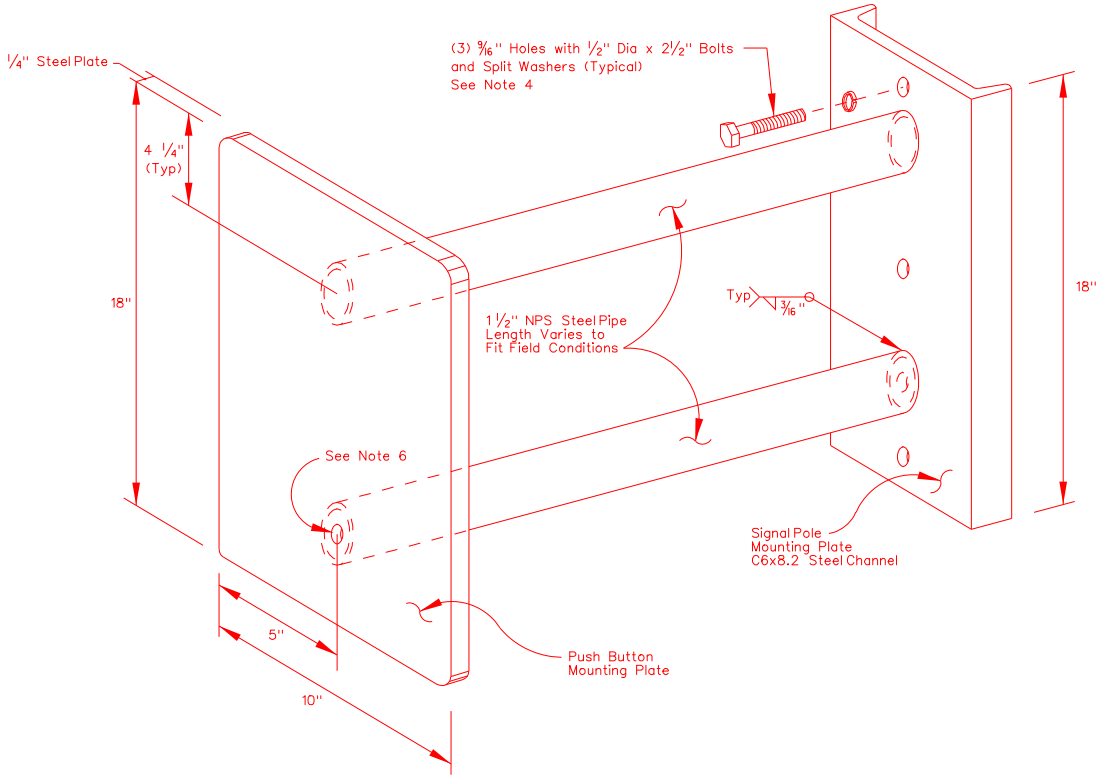

NOTES:

1. 1/2" RADIUS ON ALL CORNERS. SMOOTH AND NEATLY ROUND EXPOSED EDGES TO A 1/8" RADIUS.
2. ALL MATERIAL SHALL CONFORM TO THE STANDARD SPECIFICATIONS FOR ROAD AND BRIDGE CONSTRUCTION. UNLESS OTHERWISE SPECIFIED.
3. 1 1/2" NPS STEEL PIPE USE SCHEDULE 40 AND 2" NPS STEEL PIPE USE SCHEDULE 80. 2" NPS PIPE IS ONLY USED WITH THE ADJUSTABLE EXTENDER.
4. DRILL AND TAP HOLES 20TPI INTO SIGNAL POLE.
5. ATTACH PUSH BUTTON TO MOUNTING PLATE PER MANUFACTURES RECOMMENDATIONS.
6. DRILL 1/2" HOLES IN MOUNTING PLATES AT LOWER EXTENSION PIPE FOR CONDUCTORS. SMOOTH EDGES TO PREVENT DAMAGE TO INSULATION.

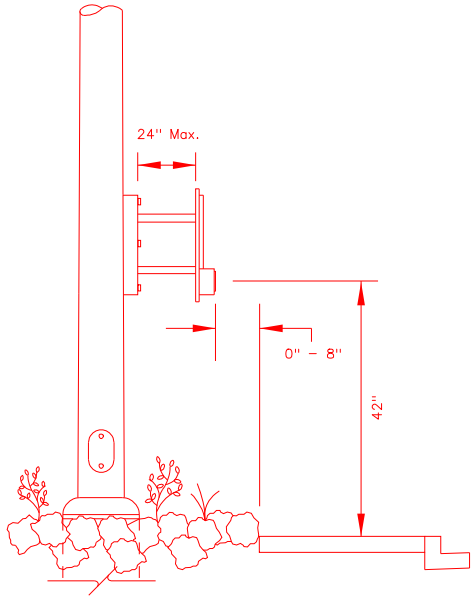

ELEVATION

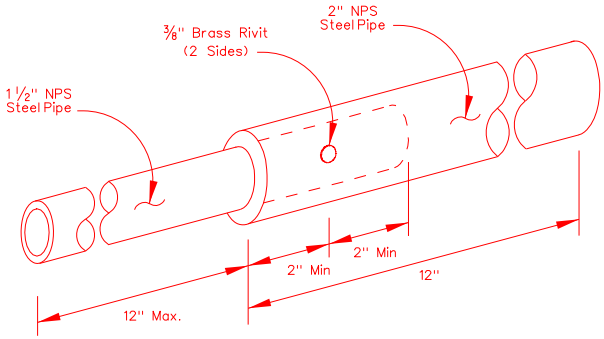

ADJUSTABLE EXTENDER
(OPTIONAL)

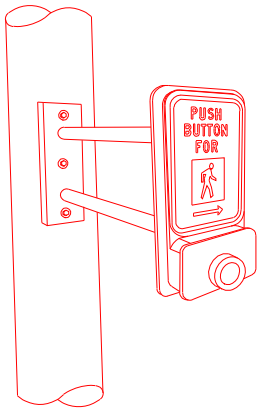

NEVADA DEPARTMENT OF TRANSPORTATION

PEDESTRIAN
PUSH BUTTON
EXTENSION

Signed Original On File	T-30.1.3.4	(623)
CHIEF SAFETY/TRAFFIC ENGR	ADOPTED 5/09	REVISION

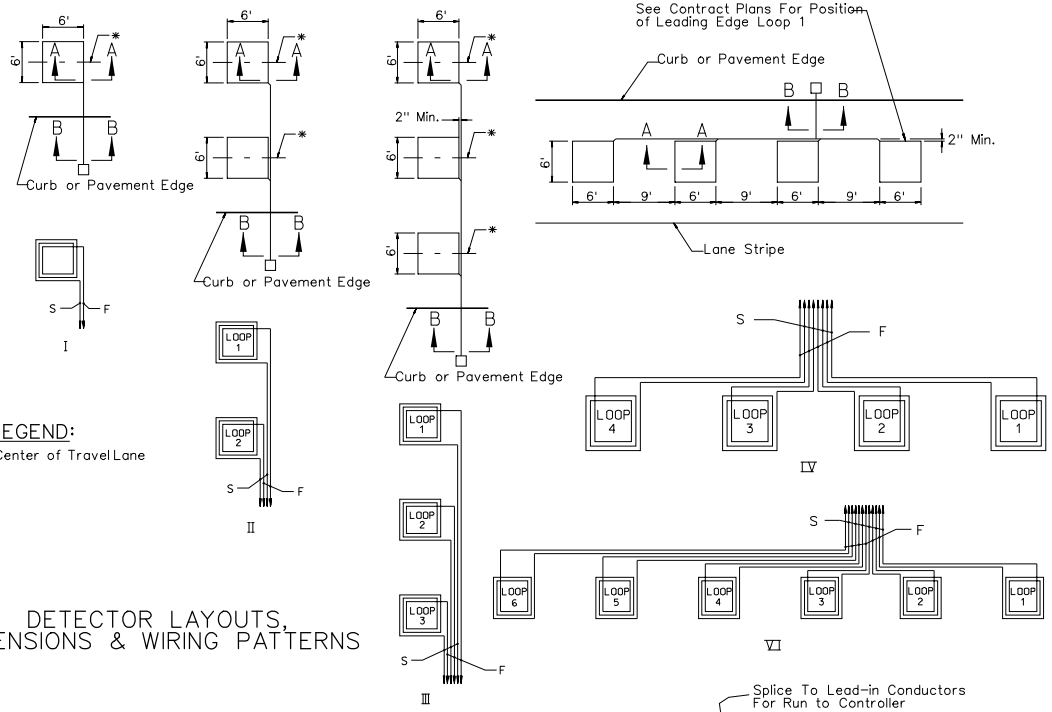

LEGEND:

*Center of Travel Lane

DETECTOR LAYOUTS, DIMENSIONS & WIRING PATTERNS

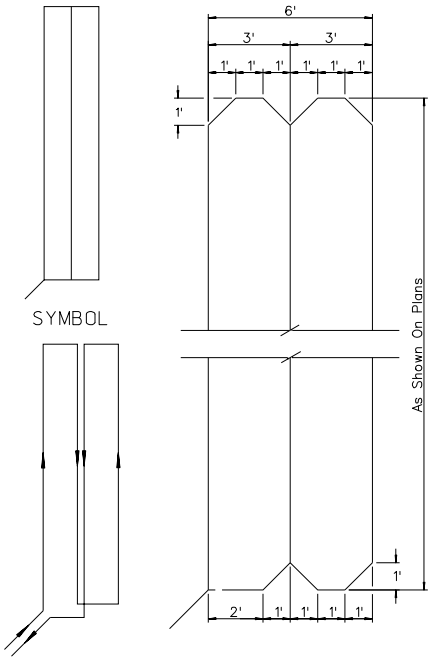

WINDING DETAIL (TWO TURNS)

SAW SLOT DETAIL

QUADRAPOLE LOOP DETECTOR

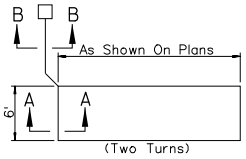

LOOP DETECTOR

6' x 20' AND LONGER

CONDUCTOR IDENTIFICATION IN PULL BOX SHALL INCLUDE THE FOLLOWING:

1. SENSOR NUMBER AND PHASE
2. LOOP NUMBER
3. START (S) AND FINISH (F)

CABLE IDENTIFICATION IN CONTROLLER CABINET SHALL INCLUDE THE FOLLOWING:

1. LOWER CASE LETTER AS SHOWN ON PLANS FOR DETECTOR AMPLIFIER ASSIGNMENT
2. PHASE DESIGNATION

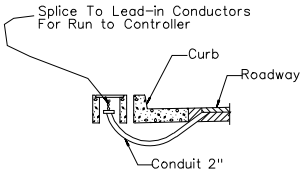

CONDUIT INSTALLATION

NOTE:
AT PULLBOX LOCATIONS WHERE THERE IS NO CURB AND GUTTER THE CONDUIT SHALL EXTEND FROM THE PULLBOX TO 12" INSIDE THE EDGE OF THE PAVEMENT.

LOOP INSTALLATION PROCEDURE:

1. SAW SLOTS IN PAVEMENT FOR LOOP CONDUCTORS AS SHOWN IN DETAILS. BLOW OUT AND DRY THOROUGHLY WITH COMPRESSED AIR.
2. INSTALL TERMINATION PULL BOX.
3. INSTALL #14 AWG LOOP CONDUCTOR IN SLOTS USING A 3/16" TO 1/4" THICK WOOD PADDLE (SEE "LOOP WINDING PATTERNS"). ALLOW ADDITIONAL LENGTH FOR THE RUN TO TERMINATION PULL BOX PLUS 5 FEET OF SLACK IN PULL BOX. THIS ADDITIONAL LENGTH OF CONDUCTOR FOR EACH LOOP CIRCUIT SHALL BE TWISTED TOGETHER INTO A PAIR (AT LEAST 5 TURNS PER FOOT) BEFORE BEING RUN TO PULL BOX.
4. IDENTIFY LOOP CIRCUIT PAIRS. IDENTIFY START AND FINISH OF CONDUCTOR.
5. SPLICE LOOP CONDUCTORS TO LEAD-IN CABLE. ALL SPLICES SHALL BE SOLDERED USING 60/40 RESIN CORE SOLDER.
6. ALL SPLICES AND TAPINGS SHALL BE PROVIDED A SOUND ENVIRONMENTAL SEAL.
7. WHERE LOOP CONDUCTORS ARE NOT TO BE SPLICED TO A LEAD-IN CABLE, ENDS OF CONDUCTORS SHALL SHALL BE TAPED.
8. FILL SLOTS AS SHOWN IN DETAILS.
9. NO MORE THAN FOUR LOOP DETECTOR CONDUCTORS SHALL BE INSTALLED IN ONE SAWED SLOT. ALL LOOP CONDUCTORS IN SAME SLOT SHALL BE FOR SAME SIGNAL PHASE.
10. LEAD-IN CABLE SHALL NOT BE SPLICED BETWEEN THE TERMINATION PULL BOX AND THE CONTROLLER CABINET.
11. DISTANCE BETWEEN SIDE OF LOOP AND LEAD-IN SAW CUT SHALL BE 2' MINIMUM. DISTANCE BETWEEN LEAD-IN SAW CUTS SHALL BE 6" MINIMUM.
12. WHEN LEAD-IN SAW CUTS ARE FOR SAMPLING DETECTORS OR FOR LEFT TURN LANE DETECTORS WHERE SAW CUTS CROSS OTHER TRAFFIC LANES, CONDUCTORS SHALL BE PAIRED FOR EACH LOOP CIRCUIT AND TWISTED FIVE TURNS PER FOOT BETWEEN LOOP AND PULL BOX.
13. WHERE DETECTOR LOOPS ARE CUT INTO PAVEMENT, 6' ROUND LOOPS MAY BE USED IN LIEU OF 6' x 6' SQUARE LOOP DETECTORS.

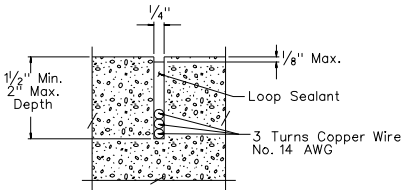

SECTION A-A

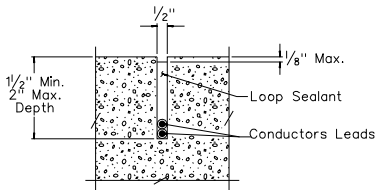

SECTION B-B

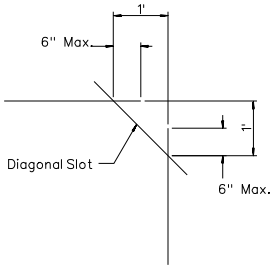

PLAN VIEW OF DIAGONAL SLOT AT CORNERS

NEVADA DEPARTMENT OF TRANSPORTATION

LOOP DETECTORS

Signed Original On File	T-30.1.4	(623)
CHIEF SAFETY/TRAFFIC ENGR.	ADOPTED 12/79	REVISION 10/98

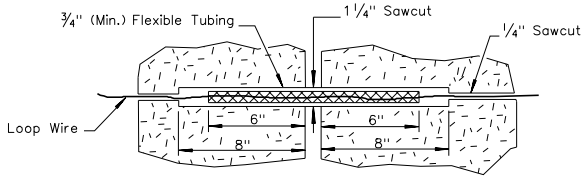

PLAN

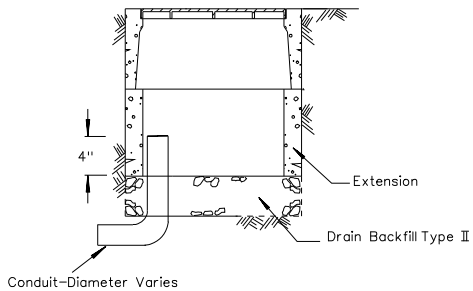

SECTION A-A

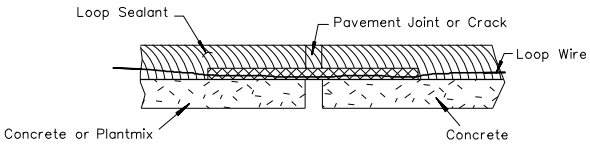

ELEVATION

PAVEMENT JOINT CROSSING DETAILS

No Direct Payment

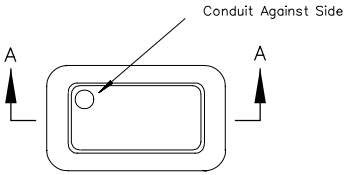

NO.5 PULL BOX

For Conduit Location
See Notes 1 & 2

NOTES:

1. ALL PULL BOXES SHALL BE NO. 5.
   SEE SHEET T-30.1.18 FOR DETAILS NOT SHOWN.

2. PAYMENT SHALL BE MADE UNDER THE FOLLOWING ITEMS:
   CONDUIT - DIAMETER VARIES
   NO. 5 PULL BOX
   6 FOOT x 6 FOOT DETECTOR LOOPS

NEVADA DEPARTMENT OF TRANSPORTATION

No. 5 PULL BOX &
PAVEMENT JOINT
LOOP CROSSING DETAILS

Signed Original On File	T-30.1.4.1	(623)
CHIEF SAFETY/TRAFFIC ENGR.	ADOPTED 9/97	REVISION 7/02

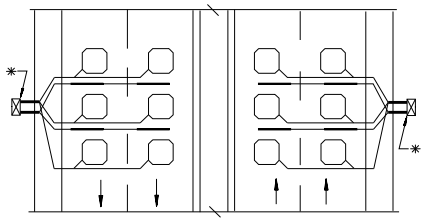

4 – LANE

WITH TWO SPECIAL M-1 CABINETS LOCATED TO THE OUTSIDE

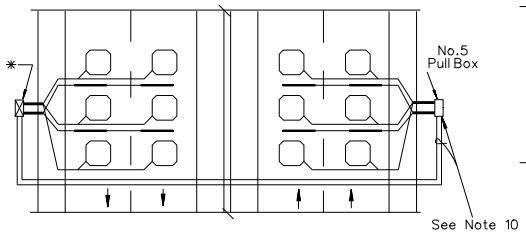

4 – LANE

WITH ONE SPECIAL M-1 CABINET TO THE OUTSIDE

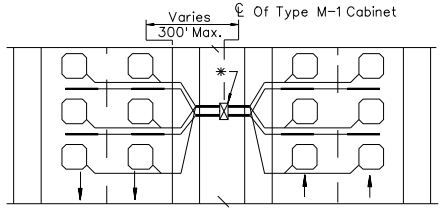

4 – LANE

WITH ONE SPECIAL M-1 CABINET LOCATED IN MEDIAN

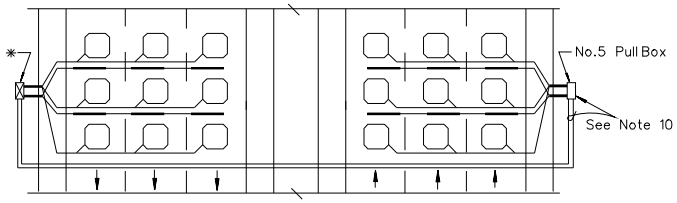

6 – LANE

WITH ONE SPECIAL M-1 CABINET TO THE OUTSIDE

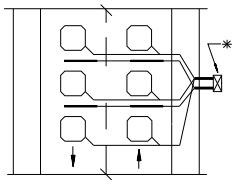

2 - LANE

1 EACH DIRECTION

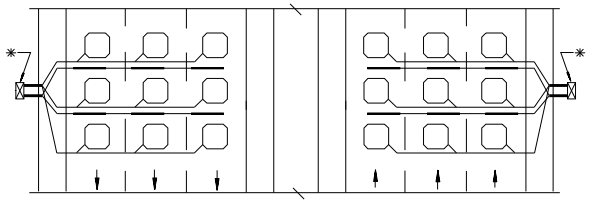

6 – LANE

WITH TWO SPECIAL M-1 CABINETS LOCATED TO THE OUTSIDE

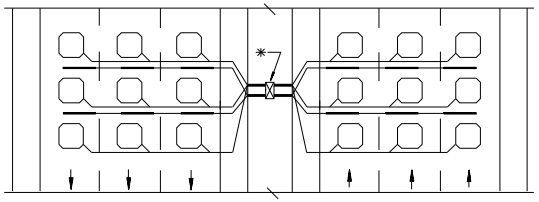

6 – LANE

WITH ONE SPECIAL M-1 CABINET LOCATED IN MEDIAN

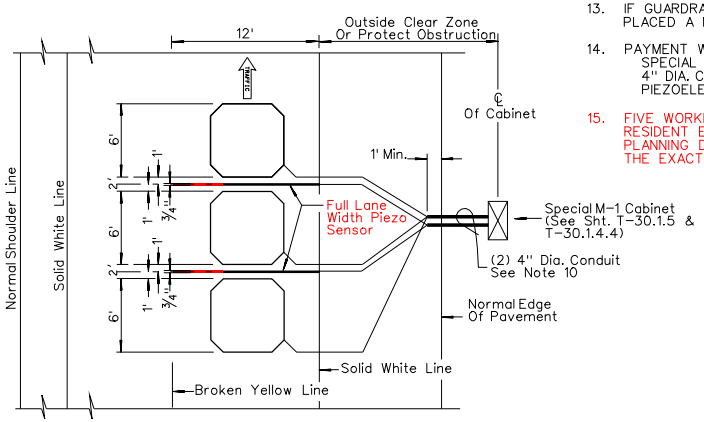

AVC DETECTOR LOOP PLACEMENT DETAIL

OPPOSITE LANE LOOPS NOT SHOWN FOR CLARITY

NOTES:

1. ALL LOOPS SHALL BE 6'x 6' SQUARE WITH 4 TURNS OF WIRE OR, ALL LOOPS SHALL BE 6' ROUND LOOPS WITH 4 TURNS OF WIRE.
2. EACH LOOP SHALL BE A CONTINUOUS RUN TO THE SPECIAL M-1 CABINET WITH NO SPLICES AND SHALL BE LABELED AT THE ENDS WITH LANE PLACEMENT ASSIGNMENT.
3. LOOP WIRE PAIRS FROM LOOP PROPER TO NO. 5 PULL BOX OR SPECIAL M-1 CABINET SHALL BE TWISTED NO LESS THAN FOUR TIMES PER FOOT.
4. LOOP WIRE PAIRS SHALL BE TWISTED NO LESS THAN FOUR TIMES PER FOOT FOR THE ENTIRE HOME RUN.
5. LOOPS SHALL BE CENTERED IN ALL TRAVEL LANES AND TRUN LANES.
6. LOOP CUTS SHALL BE 3/8" WIDE x 2 1/2"–3" MAXIMUM DEPTH.
7. LOOP WIRE SHALL BE AWG 14 STRANDED IMSA–51–1.
8. FOR DIAGONAL SLOT AT CORNERS DETAIL, SEE STANDARD PLAN SHEET T–30.1.4.
9. LOOP WIRE AND PIEZOELECTRIC SENSOR CABLE WIRES SHALL BE CARRIED IN SEPARATE CONDUIT TO NO. 5 PULL BOX AND/OR SPECIAL M-1 CABINET. CONDUIT GOING UNDER PAVEMENT AREAS IS SHOWN OUTSIDE THE LOOP DEPICTIONS FOR CLARITY.
10. PIEZOELECTRIC SENSORS SHALL BE FULL LANE WIDTH AND INSTALLED IN ACCORDANCE WITH MANUFACTURERS SPECIFICATIONS UNLESS OTHERWISE MENTIONED HERE.
11. PIEZOELECTRIC SENSOR CABLE WIRE SHALL BE A CONTINUOUS RUN TO THE SPECIAL M-1 CABINET AND LABELED WITH LANE PLACEMENT ASSIGNMENT.
12. AVC DETECTOR SHALL INCLUDE ALL CONDUCTORS AND SAW CUTTING NECESSARY FOR INSTALLATION.
13. IF GUARDRAIL/BARRIER RAIL IS PROVIDED, THE CABINET SHALL BE PLACED A MINIMUM OF 24" BEHIND RAIL.
14. PAYMENT WILL BE MADE UNDER THE FOLLOWING ITEMS:

SPECIAL M-1 CABINET	(EACH)	NO. 5 PULL BOX	(EACH)
4" DIA. CONDUIT	(LINFT)	6'x 6' LOOPS	(EACH)
PIEZOELECTRIC SENSORS	(EACH)		

15. FIVE WORKING DAYS PRIOR TO PLACEMENT OF LOOP DETECTORS, THE RESIDENT ENGINEER SHALL NOTIFY THE TRAFFIC SECTION OF THE PLANNING DIVISION (888–7155) FOR ASSISTANCE IN ESTABLISHING THE EXACT LOCATION.

LEGEND:

✳ –SPECIAL M–1 CABINET

NEVADA DEPARTMENT OF TRANSPORTATION

AVC DETECTOR CONFIGURATION AND NOTES

Signed Original On File	T-30.1.4.2	(623)
CHIEF SAFETY/TRAFFIC ENGR.	ADOPTED 9/97	REVISION 5/09

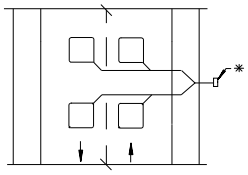

2 – LANE
BOTH DIRECTIONS

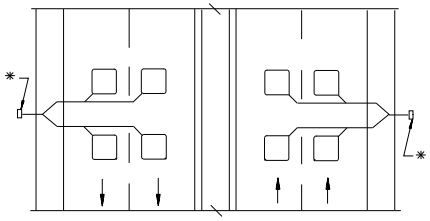

4 – LANE

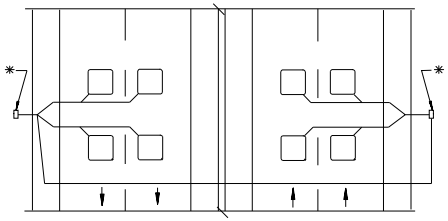

4 – LANE

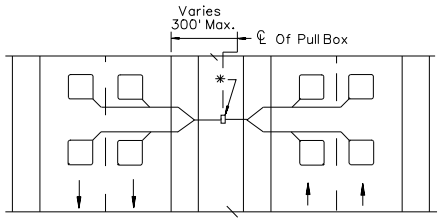

4 – LANE

NOTES:

1. ALL LOOPS SHALL BE 6'x 6' SQUARE WITH 4 TURNS OF WIRE OR, ALL LOOPS SHALL BE 6' ROUND LOOPS WITH 4 TURNS OF WIRE.
2. LOOP WIRE PAIRS FROM LOOP PROPER TO NO. 5 PULL BOX SHALL BE TWISTED NO LESS THAN FOUR TIMES PER FOOT.
3. LOOP WIRE PAIRS SHALL BE TWISTED NO LESS THAN FOUR TIMES PER FOOT FOR THE ENTIRE HOME RUN.
4. LOOP CUTS SHALL BE ⅜" WIDE x 2½"–3" MAXIMUM DEPTH.
5. LOOPS SHALL BE CENTERED IN ALL TRAVEL AND TURN LANES.
6. LOOP WIRE SHALL BE AWG 14 STRANDED IMSA–51–1.
7. EACH INDIVIDUAL CONDUCTOR SHALL BE A CONTINUOUS RUN WITH NO SPLICES AND SHALL BE LABELED AT EACH END WITH THE LANE ASSIGNMENT.
8. IT SHALL BE THE CONTRACTORS RESPONSIBILITY TO ASCERTAIN THAT THE LOOP PLACEMENT IS NOT IN CONFLICT WITH OTHER ITEMS OF WORK.
9. FIVE WORKING DAYS PRIOR TO PLACEMENT OF LOOP DETECTORS, THE RESIDENT ENGINEER SHALL NOTIFY THE TRAFFIC SECTION OF THE PLANNING DIVISION (888–7155) FOR ASSISTANCE IN ESTABLISHING THE EXACT LOCATION.
10. DETECTORS SHALL BE INSTALLED AFTER DENSE GRADE PAVING OR PROFILE GRADE IS ESTABLISHED.
11. LOOP LOCATION SHALL BE MARKED ON THE EDGE OF THE PAVEMENT BY PAINTING THE WORD "LOOP" IN WHITE.
12. FOR DIAGONAL SLOT AT CORNERS DETAIL SEE STANDARD SHT. T–30–1.4.
13. SEE STANDARD SHEET T–30–1.4.1 FOR PAVEMENT JOINT DETAILS.
14. PAYMENT WILL BE MADE UNDER THE FOLLOWING ITEMS:
    - NO. 5 PULL BOX (EACH)
    - 6'x 6' LOOPS (EACH)
    - 3" DIA. CONDUIT (LINFT)

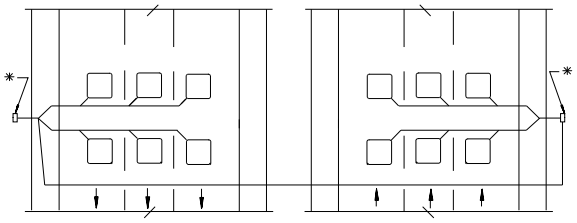

6 – LANE

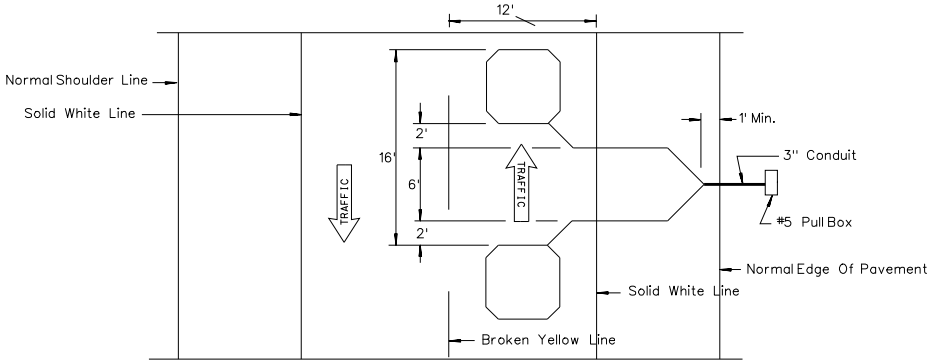

SPEED DETECTOR LOOP PLACEMENT DETAIL
(OPPOSITE LANE LOOPS NOT SHOWN FOR CLARITY)

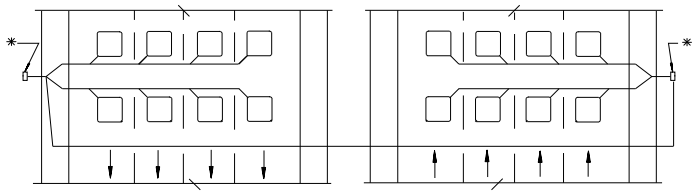

8 – LANE

LEGEND:

* –No. 5 Pull Box

NEVADA DEPARTMENT OF TRANSPORTATION

SPEED DETECTOR LOOP CONFIGURATION AND NOTES

Signed Original On File	T-30.1.4.3	(623)
CHIEF SAFETY/TRAFFIC ENGR.	ADOPTED 9/97	REVISION 8/09

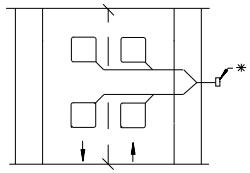

2 – LANE
BOTH DIRECTIONS

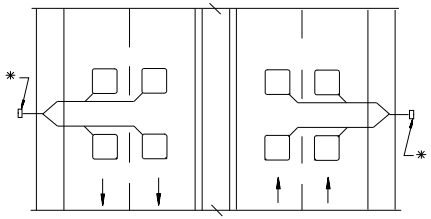

4 – LANE
WITH TWO SPECIAL M-1 CABINETS
LOCATED TO THE OUTSIDE

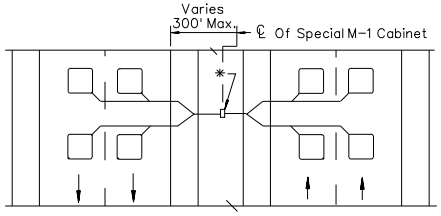

4 – LANE
WITH ONE SPECIAL M-1 CABINET
LOCATED IN MEDIAN

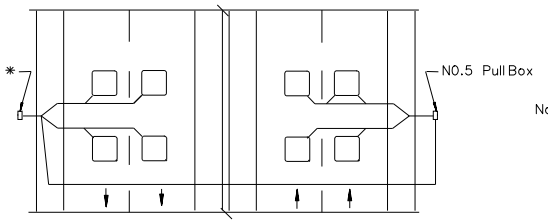

4 – LANE
WITH ONE SPECIAL M-1 CABINET
TO THE OUTSIDE

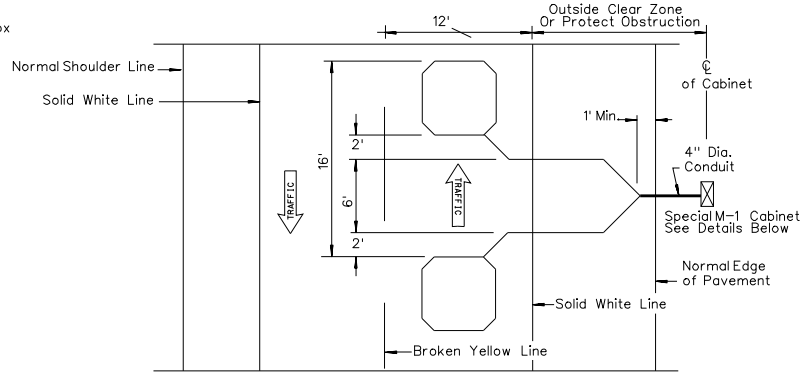

ATR DETECTOR LOOP PLACEMENT DETAIL
OPPOSITE LANE LOOPS NOT SHOWN FOR CLARITY

NOTES:

1. ALL LOOPS SHALL BE 6'x 6' SQUARE WITH 4 TURNS OF WIRE OR, ALL LOOPS SHALL BE 6' ROUND LOOPS WITH 4 TURNS OF WIRE.
2. LOOP WIRE PAIRS FROM LOOP PROPER TO NO. 5 PULL BOX OR SPECIAL M-1 CABINET SHALL BE TWISTED NO LESS THAN FOUR TIMES PER FOOT.
3. LOOP WIRE PAIRS SHALL BE TWISTED NO LESS THAN FOUR TIMES PER FOOT FOR THE ENTIRE HOME RUN.
4. LOOP CUTS SHALL BE 3/8" WIDE x 2 1/2"-3" MAXIMUM DEPTH.
5. LOOPS SHALL BE CENTERED IN ALL TRAVEL AND TURN LANES.
6. LOOP WIRE SHALL BE AWG 14 STRANDED IMSA-51-1.
7. EACH INDIVIDUAL CONDUCTOR SHALL BE A CONTINUOUS RUN WITH NO SPLICES AND SHALL BE LABELED AT EACH END WITH THE LANE ASSIGNMENT.
8. IT SHALL BE THE CONTRACTORS RESPONSIBILITY TO ASCERTAIN THAT THE LOOP PLACEMENT IS NOT IN CONFLICT WITH OTHER ITEMS OF WORK.
9. FIVE WORKING DAYS PRIOR TO PLACEMENT OF LOOP DETECTORS, THE RESIDENT ENGINEER SHALL NOTIFY THE TRAFFIC SECTION OF THE PLANNING DIVISION (888-7155) FOR ASSISTANCE IN ESTABLISHING THE EXACT LOCATION.
10. DETECTORS SHALL BE INSTALLED AFTER DENSE GRADE PAVING OR PROFILE GRADE IS ESTABLISHED.
11. LOOP LOCATION SHALL BE MARKED ON THE EDGE OF THE PAVEMENT BY PAINTING THE WORD "LOOP" IN WHITE.
12. FOR DIAGONAL SLOT AT CORNERS DETAIL SEE STANDARD SHEET. T-30-1.4.
13. FOR SPECIAL M-1 CABINET ONLY – IN CONFORMANCE WITH NATIONAL ELECTRIC CODE 250-56, WHEN THE GROUNDING PLATE DOES NOT HAVE A RESISTANCE TO GROUND OF 25 OHMS OR LESS, IT SHALL BE AUGMENTED BY ONE ADDITIONAL ELECTRODE PREFERABLY A 1/2" X 96" COPPER GROUND ROD.
14. IF GUARDRAIL/BARRIER RAIL IS PROVIDED, THE CABINET SHALL BE PLACED A MINIMUM OF 24" BEHIND RAIL.
15. SEE STANDARD SHEET T-30-1.4.1 FOR PAVEMENT JOINT DETAILS.
16. PAYMENT WILL BE MADE UNDER THE FOLLOWING ITEMS:
    SPECIAL CABINET (EACH) SPECIAL M-1 CABINET (EACH)
    NO. 5 PULL BOX (EACH) 4" DIA. CONDUIT (LINFT)
    6' x 6' LOOPS (EACH)

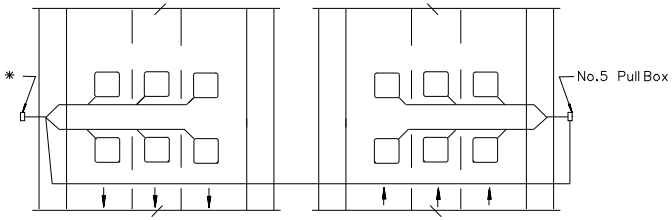

6 – LANE
WITH ONE SPECIAL M-1 CABINET
TO THE OUTSIDE

LEGEND:

- * Special M-1 Cabinet
- ① Main Switch
- ② Field Wire Terminal Blocks
- ③ N.E.M.A. Standard Plug Receptacle With Grounding Contact
- ④ Radio Interference Suppressor
- ⑤ Shelf
- ⑥ Thermostat-Controlled Fan With T-Vent

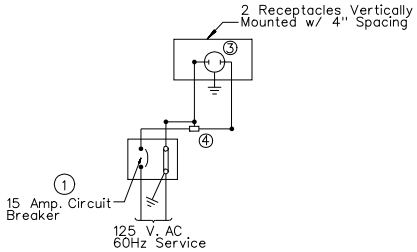

CABINET WIRING

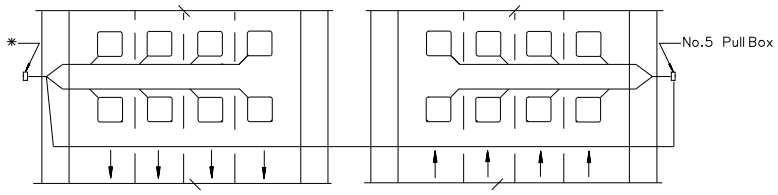

8 – LANE
WITH ONE SPECIAL M-1 CABINET TO THE OUTSIDE

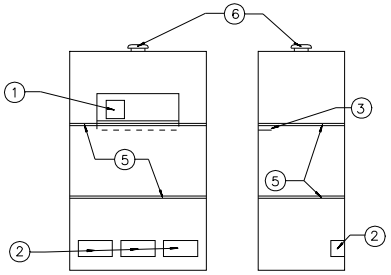

SPECIAL M-1 CABINET
SEE SHEET T-30.1.5 FOR ADDITIONAL DETAILS

NEVADA DEPARTMENT OF TRANSPORTATION

ATR DETECTOR LOOP
CONFIGURATION AND NOTES

Signed Original On File	T-30.1.4.4	(623)
CHIEF SAFETY/TRAFFIC ENGR.	ADOPTED 10/98	REVISION 8/09

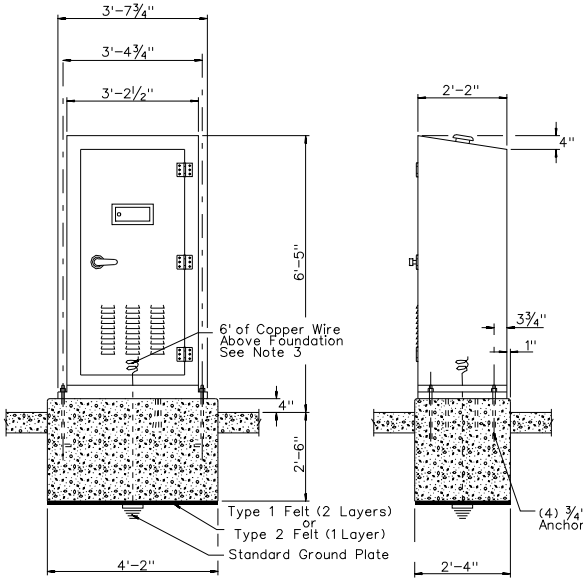

TYPE R CABINET

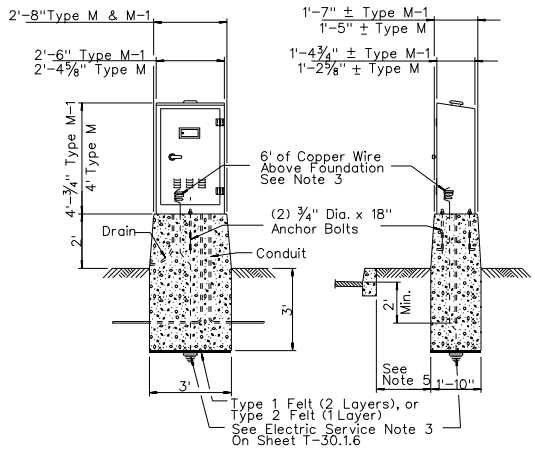

TYPE M & M-1 CABINET

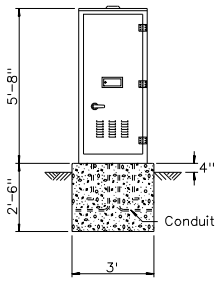

EXTENDED TYPE M CABINET

For Details Not Shown See Type M Cabinet

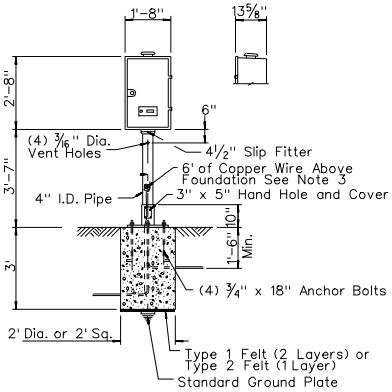

TYPE G CABINET

NOTES:

1. ALL CONDUITS SHALL EXTEND ABOVE FOUNDATIONS A MINIMUM OF 2".
2. ALL CABINETS SHALL BE PAINTED WHITE ON THE INSIDE AND OUTSIDE UNLESS SPECIFIED IN THE SPECIAL PROVISIONS.
3. ½" x 96" GROUND ROD MAY BE SUBSTITUTED IN LIEU OF COPPER WIRE.
4. CONCRETE SHALL BE CLASS A OR AA.
5. IF A CABINET IS TO BE INSTALLED IN OR NEAR A SIDEWALK AREA, THE HORIZONTAL AND VERTICAL CLEARANCE, AS SHOWN IN R-5.2.1, "TYPICAL SIDEWALK VS. OBSTRUCTION CLEARANCE DETAIL", SHALL BE MET.

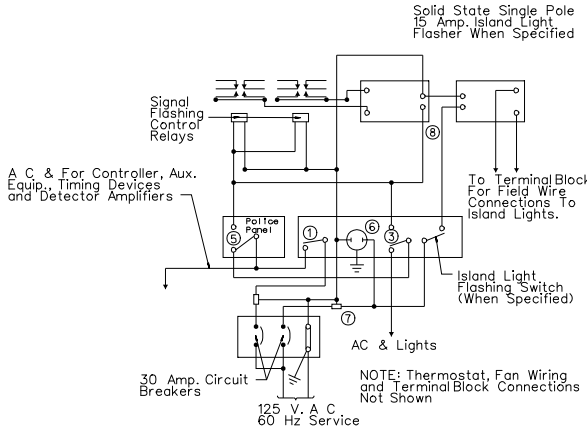

CABINET WIRING

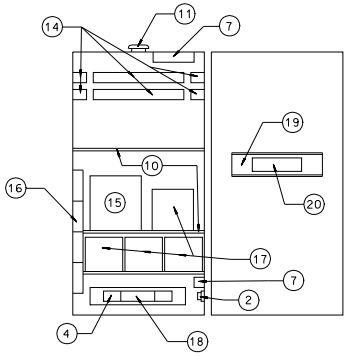

TYPE R CABINET

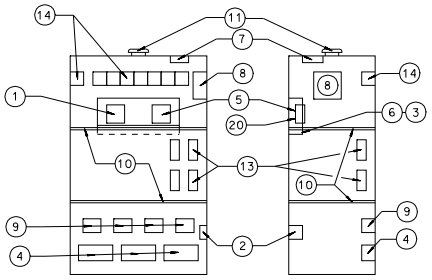

TYPE M & M-1 CABINET

LEGEND:

1. MAIN SWITCH
2. PLUG FUSE
3. SIGNAL FLASH SWITCH INSIDE CABINET
4. FIELD WIRE TERMINAL BLOCKS
5. AUXILIARY DOOR FLASH SWITCH
6. N.E.M.A. STANDARD PLUG RECEPTACLE WITH GROUNDING CONTACT
7. RADIO INTERFERENCE SUPPRESSOR
8. SOLID STATE SIGNAL FLASHER (CABINET MFR. TO DETERMINE POLES & CAPACITY, UNLESS OTHERWISE SPECIFIED)
9. EXTERNAL LIGHT RELAYS
10. SHELF
11. THERMOSTAT-CONTROLLED FAN WITH T VENT
12. NOT USED
13. INSTRUMENT TERMINAL STRIP
14. CONTROL RELAYS
15. DISPATCHER UNIT
16. INTERNAL INTERCONNECT TERMINAL STRIPS
17. MINOR MOVEMENT UNITS
18. SLANT PANEL
19. POLICE PANEL
20. INTERNAL POWER PANEL AND RECALL SWITCHES FOR ALL DETECTED PHASES

NEVADA DEPARTMENT OF TRANSPORTATION

CONTROLLER CABINETS

Signed Original On File	T-30.1.5	(623)
CHIEF SAFETY/TRAFFIC ENGR.	ADOPTED 2/71	REVISION 2/02

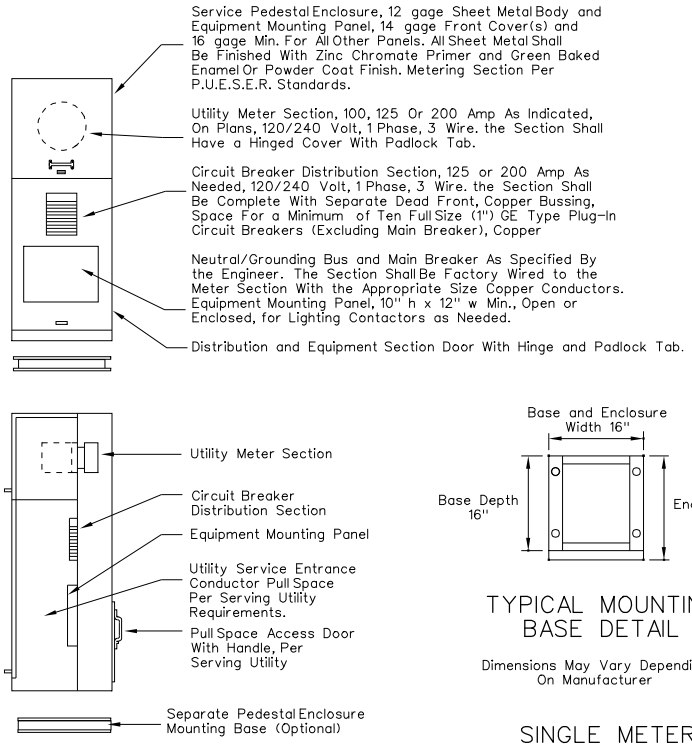

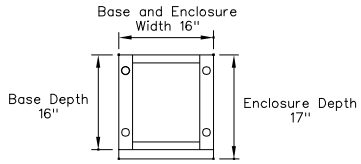

TYPICAL MOUNTING BASE DETAIL

Dimensions May Vary Depending On Manufacturer

SINGLE METER SERVICE PEDESTAL

SERVICE PEDESTAL FOUNDATION

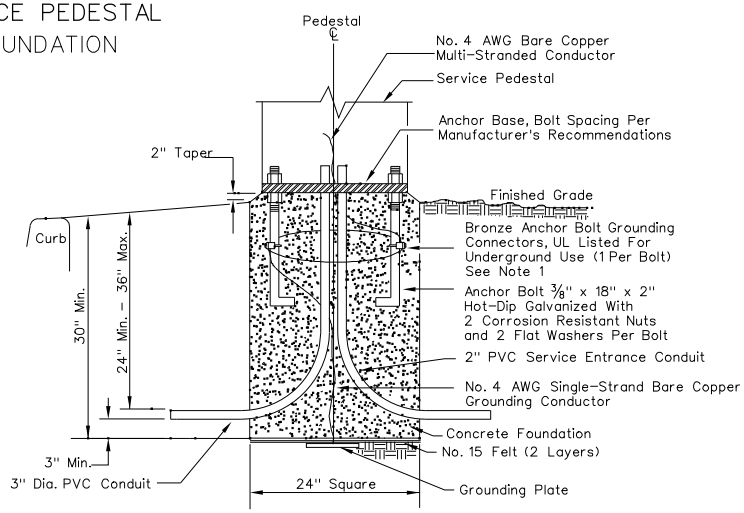

NOTES:

1. BARE COPPER GROUNDING CONDUCTOR SHALL BE LOOPED AROUND ANCHOR BOLTS ONE TIME AND CONNECTED TO EACH ANCHOR BOLT BEFORE CONTINUING DOWN TO THE GROUNDING PLATE.
2. CABINET COVERS SHALL BE PARALLEL WITH CURB.
3. IN AREAS WHERE R/W PERMITS, THE CONCRETE BASE SHALL BE PLACED AT THE BACK EDGE OF THE SIDEWALK.
4. CABINET COVERS SHALL OPEN TOWARDS THE STREET WHEN CABINETS ARE LOCATED AT BACK OF WALK. CABINET COVERS SHALL OPEN PARALLEL TO THE SIDEWALK FACING THE DIRECTION OF TRAFFIC WHEN LOCATED WITHIN THE SIDEWALK.
5. GROUND PLATE SHALL BE MADE OF NONFERROUS MATERIALS (TYPICALLY BRASS OR COPPER).

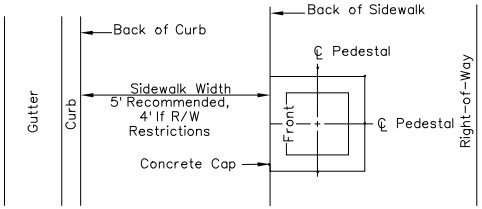

BEHIND SIDEWALK
(FOR WIDTHS 5 FT. OR LESS)

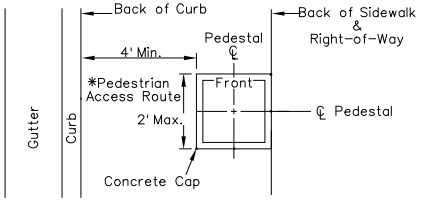

BACK PORTION OF SIDEWALK
(FOR WIDTHS OF 5 FT. OR MORE)

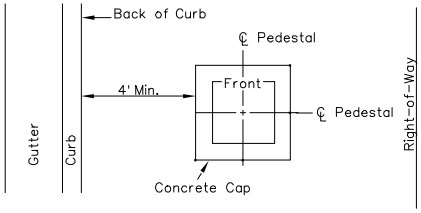

OPEN AREA

SERVICE PEDESTAL SETBACK WITHIN R/W LIMITS

LEGEND:

* WHERE INSUFFICIENT PUBLIC RIGHT-OF-WAY IS AVAILABLE TO LOCATE STREET FIXTURES OUTSIDE THE 5' NORMAL SIDEWALK WIDTH, THE PEDESTRIAN ACCESS MAY BE REDUCED TO 4' FOR A LENGTH OF 2'.

NEVADA DEPARTMENT OF TRANSPORTATION

100 & 200 AMP UNDERGROUND ELECTRICAL SERVICE

Signed Original On File	T-30.1.6	(623)
CHIEF SAFETY/TRAFFIC ENGR.	ADOPTED 12/79	REVISION 10/02

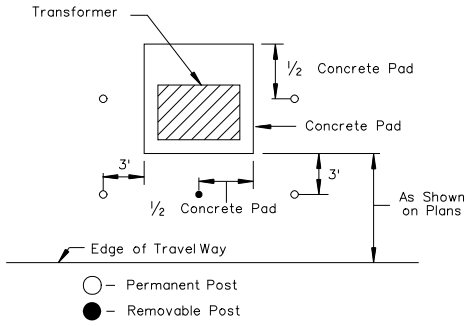

TOP VIEW

NOTES:

1. BARRIER POSTS ARE TO BE USED ONLY WHERE PAD MOUNTED TRANSFORMERS ARE INSTALLED IN AREAS SUBJECT TO DAMAGE BY VEHICULAR TRAFFIC. THE CONTRACTOR SHALL COORDINATE INSTALLATION WITH THE SERVING UTILITY COMPANY TO DETERMINE THE EXACT NUMBER OF POSTS REQUIRED.
2. FOOTINGS TO BE DRILLED HOLES, AS SHOWN, AND FILLED WITH CLASS A OR AA CONCRETE.
3. POST CONSTRUCTED OF 6" STANDARD PIPE (WELL CASING) PRIMED AND PAINTED YELLOW, AND CONCRETE FILLED.

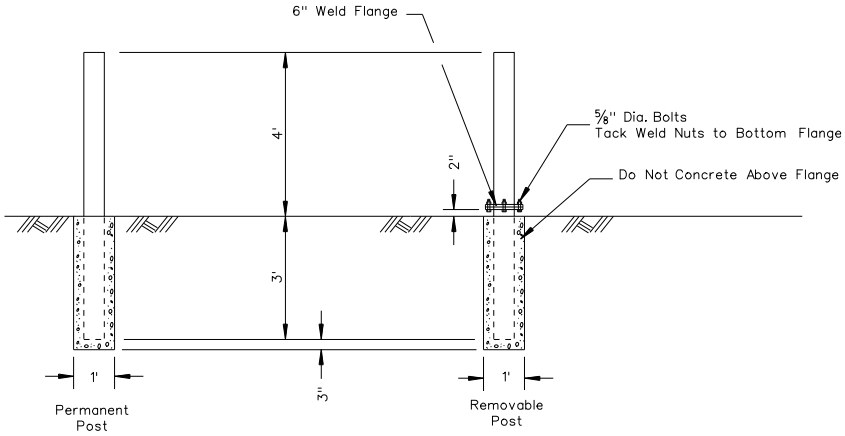

TRANSFORMER PAD BARRIER POST

NEVADA DEPARTMENT OF TRANSPORTATION

TRANSFORMER PAD BARRIER POST

Signed Original On File	T-30.1.6.2	(623)
CHIEF SAFETY/TRAFFIC ENGR.	ADOPTED 8/98	REVISION

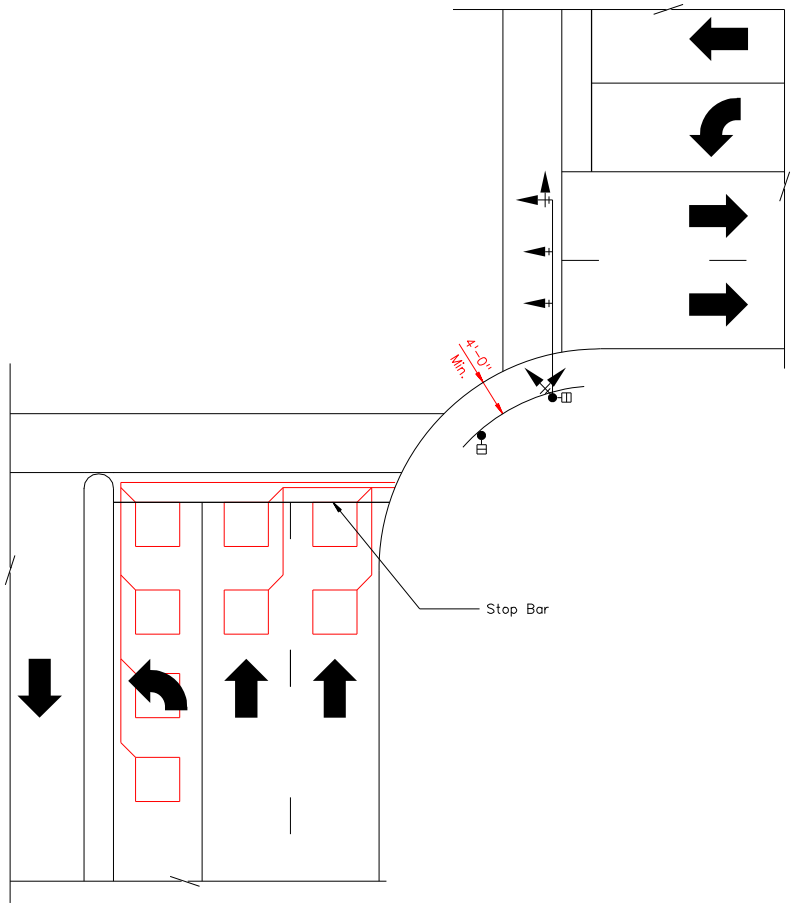

TYPICAL SIGNAL POLE AND
LOOP DETECTOR LOCATIONS

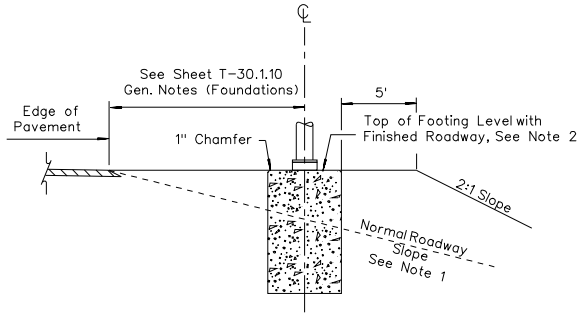

SECTION A-A

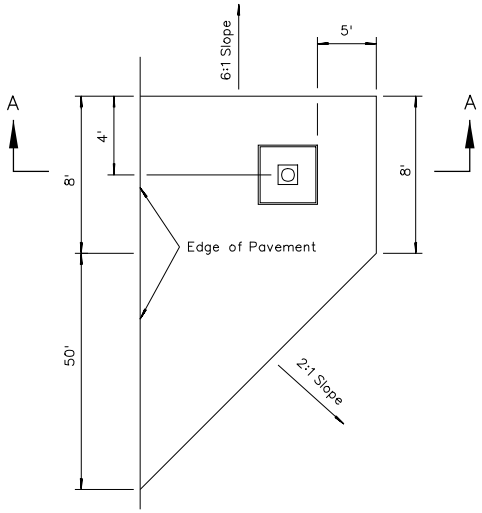

FOUNDATION ISLAND
PLAN

NOTES:

1. ISLANDS SHALL BE PLACED ONLY ON SLOPES GREATER THAN 10:1.
2. WHEN USING SAFETY BASES THE TOP OF THE FOUNDATION SHALL BE PLACED FLUSH WITH THE TOP OF THE FOUNDATION ISLAND.
3. CONCRETE SHALL BE CLASS A OR AA.
4. WHERE DETECTOR LOOPS ARE CUT INTO PAVEMENT, 6' ROUND LOOPS MAY BE USED IN LIEU OF 6' x 6' SQUARE LOOP DETECTORS.

NEVADA DEPARTMENT OF TRANSPORTATION

SIGNAL POLE AND
LOOP DETECTOR LOCATIONS
FOUNDATION ISLAND

Signed Original On File	T-30.1.8		(623)
CHIEF SAFETY/TRAFFIC ENGR.	ADOPTED 7/96	REVISION 5/09	

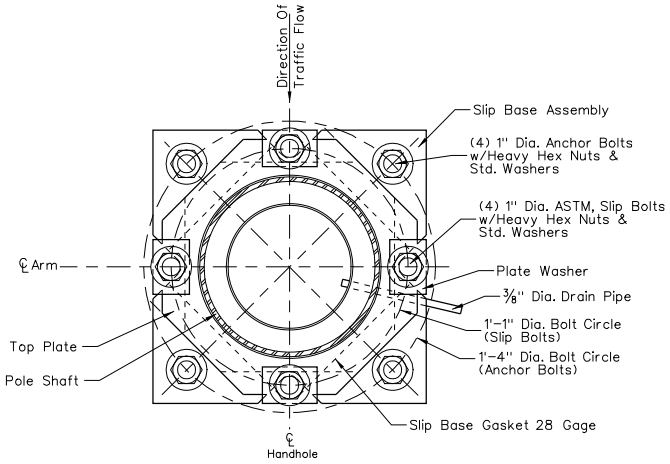

SAFETY BASE PLAN

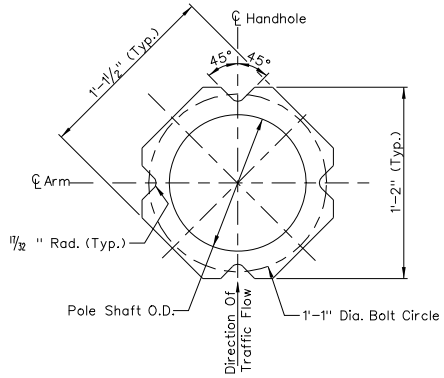

TOP PLATE PLAN

TOP PLATE ELEVATION

NOTES:

1. PLACE BOTTOM PLATE WITH SPACER PLATE ON LEVELING NUTS ON ANCHOR BOLTS AND FASTEN IN PLACE.
2. TOP PLATE SHALL BE FURNISHED BY LIGHT POLE FABRICATOR AS LIGHT POLE BASE PLATE WITH DIMENSIONS AS SHOWN IN PLAN VIEW.
3. ALL STEEL PLATE ASSEMBLIES SHALL BE HOT-DIP GALVANIZED AFTER FABRICATION.
4. ALL NUTS, BOLTS AND WASHERS SHALL BE ELECTRO-PLATED CADMIUM IN ACCORDANCE WITH ASTM B-766, TYPE NS.
5. ALL CONTACT AREAS OF PLATES SHALL BE FREE OF GALVANIZING BEADS OR RUNS.
6. SAFETY BASES SHALL BE UTILIZED ON ALL STEEL LIGHT POLES EXCEPT ON STRUCTURES OR IF PLACED BEHIND BARRIER RAIL OR GUARDRAIL.
7. GROUTING SHALL BE DONE AFTER LIGHT POLE HAS BEEN LOCATED IN FINAL POSITION.
8. ANCHOR BOLT SHALL NOT EXTEND ABOVE SLIP BASE GASKET.
9. SLIP BOLT TORQUING REQUIREMENTS:
   A. TORQUE ALL BOLTS TO 80 FT. LBS.
   B. LOOSEN BOLTS.
   C. RETIGHTEN TO FINAL TORQUE USING THE FOLLOWING SEQUENCES:

      1
   3 4
      2

   60 FT. LBS., 65 FT. LBS. THEN 70 FT. LBS.,
   RECHECK EACH BOLT FOR 70 FT. LBS.

   D. CAULK AREAS AROUND SLIP BASE GASKET. MATERIAL SHALL CONFORM TO FED. SPEC. NO. TT-S-230, TYPE II OR EQUAL.
   E. SPRAY CADMIUM BOLTS WITH GALVILITE COLD GALVANIZING COMPOUND OR EQUIVALENT.

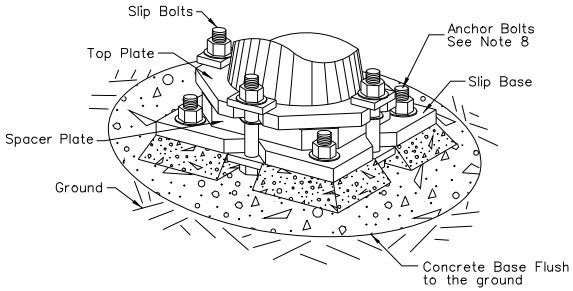

ISOMETRIC VIEW

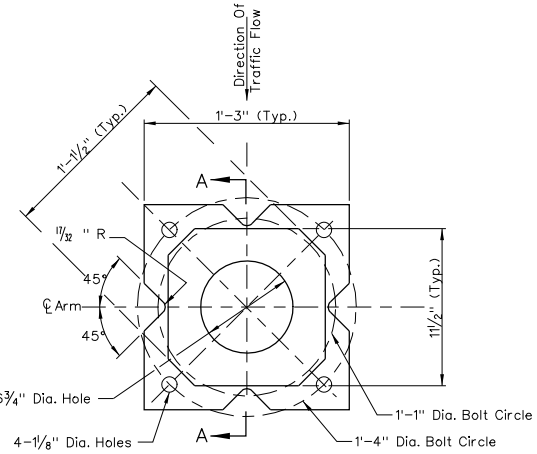

SLIP BASE & SPACER PLATE PLAN

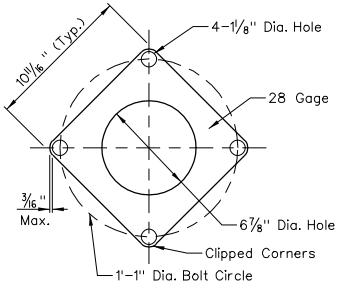

SLIP BASE GASKET

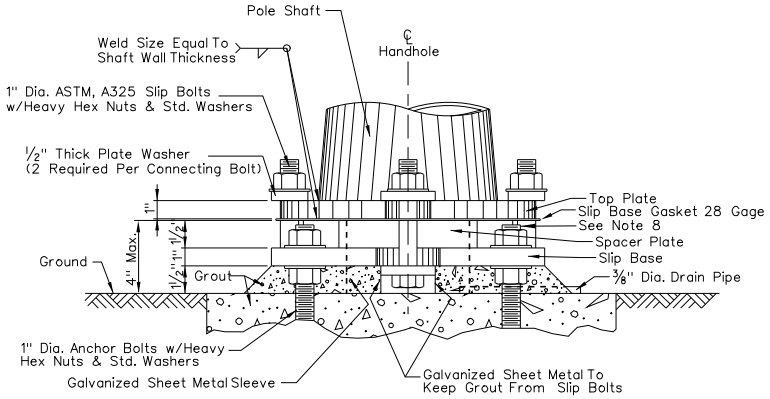

SAFETY BASE ELEVATION

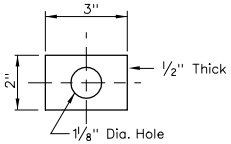

PLAN

PLATE WASHER

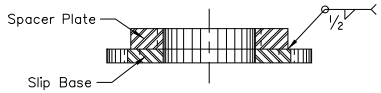

SECTION A-A

NEVADA DEPARTMENT OF TRANSPORTATION

SAFETY BASE

Signed Original On File	T-30.1.9	(623)
CHIEF SAFETY/TRAFFIC ENGR.	ADOPTED 1/91	REVISION 3/07

Pole Type	B (in.)	BC (in.)
7	1 1/4	11
14	1 3/4	12

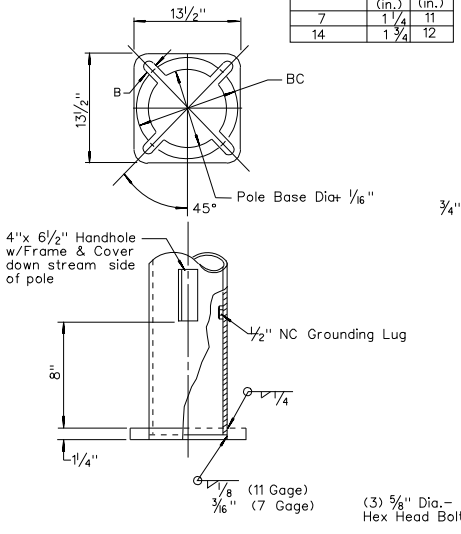

DETAIL A
BASE PLATE
(NOT APPLICABLE WHEN SAFETY BASES ARE REQ'D.)

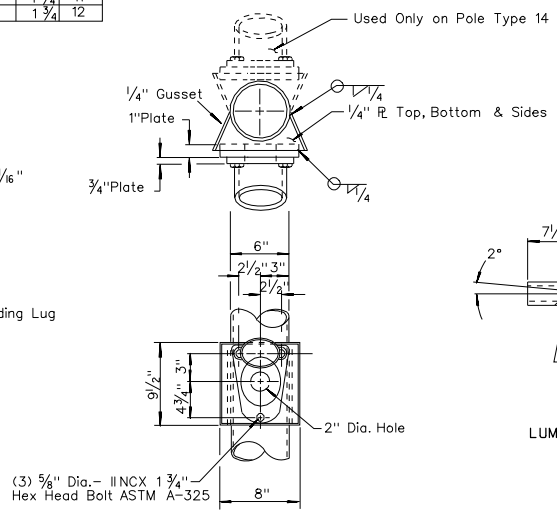

DETAIL C
LUMINAIRE ARM CONNECTION

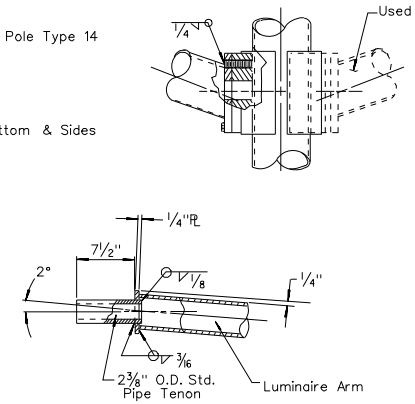

DETAIL E
LUMINAIRE TENON DETAIL

NOTES FOR ALL POLE TYPES:

DESIGN CRITERIA

AASHTO STANDARD SPECIFICATIONS FOR STRUCTURAL SUPPORTS FOR HIGHWAY SIGNS, LUMINAIRES AND TRAFFIC SIGNALS, 4th EDITION DATED 2001 AND CURRENT INTERIMS (EXCLUDING SECTION 11: FATIGUE DESIGN).

BASIC WIND SPEED = 90 MPH.

GALVANIZING

1. POLES SHALL BE GALVANIZED AS PER ASTM A-123. HARDWARE SHALL BE GALVANIZED AS PER ASTM A-153.

STEEL SIGNAL AND LUMINAIRE ARMS

1. THE LAST 3" OF THE LUMINAIRE ARM SHALL BE STRAIGHT AND HORIZONTAL WITH LUMINAIRE ATTACHED.
2. CONNECTION BETWEEN ARMS AND POLES SHALL BE MADE BY MEANS OF A RAIN TIGHT SOCKET OR A DESIGN PERMITTING SIMPLE REMOVAL OF THE ARMS.

ANCHOR BOLTS

1. PROVIDE 4-ASTM A-307 ANCHOR BOLTS, 8-ASTM A-563 HEAVY HEX NUTS, AND 8-ASTM F-436 HARDENED STEEL WASHERS FOR EACH POLE.
2. THREADS MAY BE CUT OR ROLLED, BOLTS SHALL BE GALVANIZED OR PLATED AFTER THREADS ARE FORMED. EACH BOLT SHALL BE PROVIDED WITH 6" OF THREADS.
3. WHEN USING A SAFETY BASE, ANCHOR BOLTS SHALL NOT EXTEND ABOVE THE SLIP BOLT GASKET.

STEEL POLES

1. BASE COVERS ARE REQUIRED ON ALL POLES EXCEPT WHERE SAFETY BASE IS SPECIFIED.
2. A REDUCED GAGE FOR SHAFT OF POLE WILL BE ACCEPTABLE ABOVE SIGNAL ARM ATTACHMENT SIMILAR TO POLE TYPE 28.

WELDS

1. LONGITUDINAL WELDS BY SUBMERGED ARC OR ERW CIRCUMFERENTIAL BUTT WELDS SHALL HAVE PERMANENT BACK-UP RINGS. ALL EXPOSED BUTT WELDS SHALL BE GROUND FLUSH.
2. FOR WELD SIZES NOT SHOWN, USE MINIMUM SIZE WELD AS SPECIFIED BY THE LATEST WELDING CODE.
3. BREAK ALL SHARP EDGES FOR WIRE PROTECTION.

FOUNDATIONS

1. AT LOCATIONS BEHIND CURB, ALL SIGNAL AND LIGHTING POLES SHALL BE LOCATED AT THE BACK EDGE OF SIDEWALK OR AT THE R/W LINE, TO OBTAIN A MINIMUM SETBACK DISTANCE OF 5' BEHIND THE BACK EDGE OF CURB TO CENTER OF POLE. (SEE SHEET T-30.1.8 FOR TYPICAL LOCATIONS.)
2. AT LOCATIONS WITHOUT CURB, POLES SHALL BE PLACED A MINIMUM DISTANCE OF 6' FROM SHOULDER OR A MINIMUM OF 10' FROM TRAVEL WAY, WHICH EVER IS GREATER.
3. FOR FOUNDATION DETAILS SEE SHEET T-30.1.16.
4. FOR FOUNDATION ISLAND SEE SHEET T-30.1.8.
5. CONCRETE SHALL BE CLASS A OR AA.

SAFETY BASES

1. TYPE 7 AND TYPE 14 POLES SHALL REQUIRE SAFETY BASE ASSEMBLIES UNLESS MOUNTED ON STRUCTURE BEHIND BARRIER RAIL OR NOTED OTHERWISE ON THE PLANS, SEE SHEET T-30.1.9 FOR DETAILS.

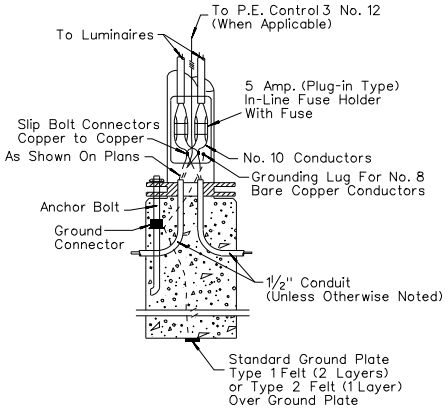

WIRING DIAGRAM FOR
POLE TYPE 7 AND TYPE 14

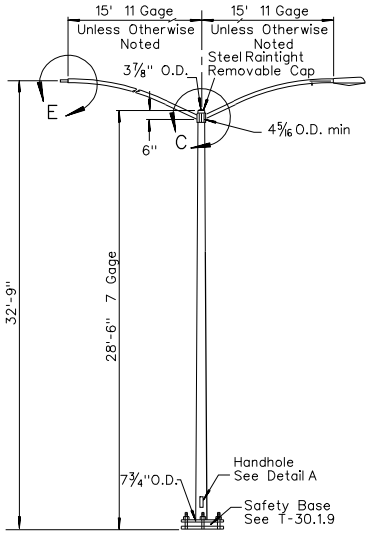

POLE TYPE 14

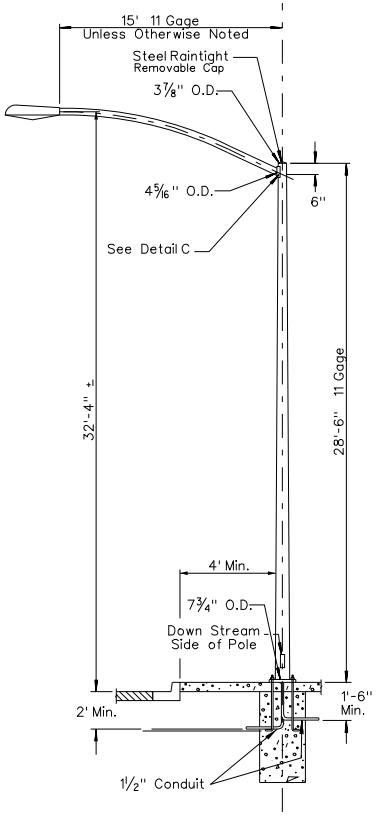

POLE TYPE 7

NEVADA DEPARTMENT OF TRANSPORTATION

TYPE 7 & 14 POLE
LIGHTING & SIGNAL
LIGHT POLES

Signed Original On File	T-30.1.10	(623)
CHIEF SAFETY/TRAFFIC ENGR.	ADOPTED 12/79	REVISION 1/05

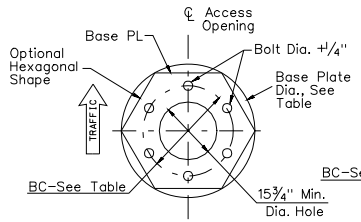

6 BOLTS

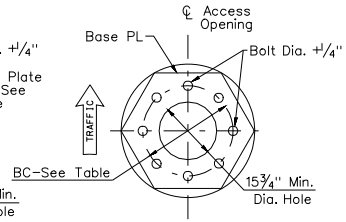

8 BOLTS

BASE PLATE DETAILS
See Note 9

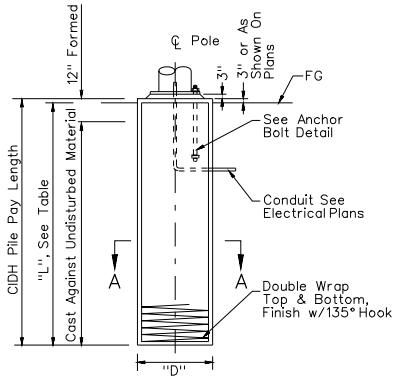

TYPICAL ELEVATION

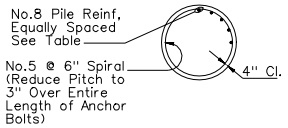

SECTION A-A
CIDH PILE DETAILS

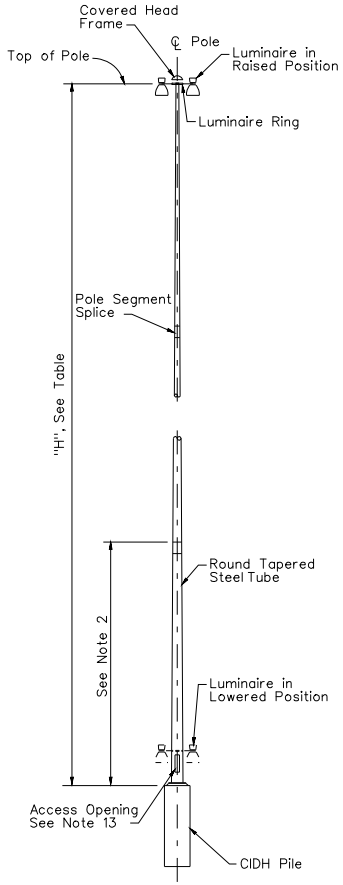

POLE DETAILS

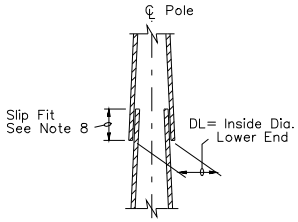

POLE SEGMENT SPLICE DETAIL

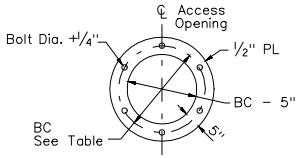

ANNULAR RING DETAIL

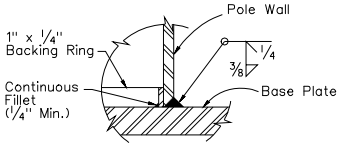

WELD DETAIL

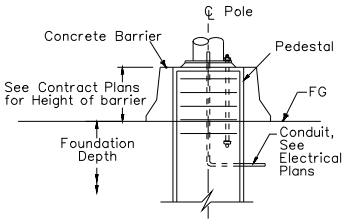

MEDIAN LOCATION

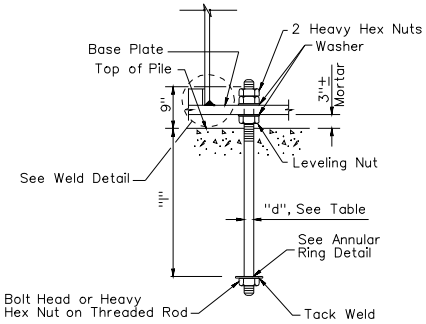

ANCHOR BOLT DETAIL
See Note 10

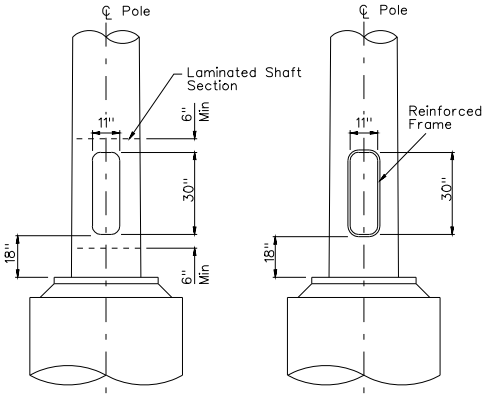

ALT 1 ALT 2

HANDHOLE DETAIL
See Note 13

SHEET 1 OF 2

NEVADA DEPARTMENT OF TRANSPORTATION

HIGH MAST LIGHT POLE & FOUNDATION DETAILS

Signed Original On File	T-30.1.11	(623)
CHIEF BRIDGE ENGINEER	ADOPTED 12/02	REVISION 1/09

Height "H" (ft)	Min Pole Base OD (in) Note 5	Min Pole Base Wall Thickness (in)	Base Plate		Anchor Bolts				CIDH Pile Data	
			Diameter (in)	Thickness (in)	Total	Size "d" (in)	BC (in)	"l" (in)	"D" (in)	Reinforcement
70	16¾	¼	30½	2	6	1¼	25	58	42	10-#8
100	18⅝	5/16	30½	2	6	1½	25	84	42	13-#8
120	21	5/16	37½	2	8	1½	32	84	48	20-#8

Minimum Shaft Length, "L" (ft) *			
"H" (ft)	Site Foundation Material **		
	Weak Rock	Stiff Clay, Sand, Gravel	Soft Clay
70	7	11	14
100	8	13	20
120	8	14	22

* Increase "L" By 2 Feet For All Heights, "H," and All Site Foundation Materials For Construction On or Within 3 Feet of Sloping Ground (Slopes Up to 1.5H:1V).

** Site Foundation Material Shall Be Assumed As Stiff Clay, Sand or Gravel Unless Otherwise Noted in the Contract Documents. Geotechnical Engineer Will Verify Weak Rock and Soft Clay On a Case-By-Case Basis.

NOTES:

1. DESIGN SPECIFICATIONS: AASHTO STANDARD SPECIFICATIONS FOR STRUCTURAL SUPPORTS FOR HIGHWAY SIGNS, LUMINAIRES AND TRAFFIC SIGNALS 2001.
2. POLE DETAILS SHALL SUIT THE LOWERING DEVICE AND THIS FOUNDATION PLAN. POLE DETAILS SHALL BE SUBMITTED TO THE ENGINEER FOR APPROVAL. ALL HIGH MAST LUMINAIRES ARE BOTTOM LATCHING WITH AN INTERNAL WINCH ASSEMBLY AND EXTERNAL MOTOR. POLE SHALL HAVE A MINIMUM TAPER OF 0.0117 Ft/Ft.
3. ALL MATERIALS TO BE GALVANIZED AFTER FABRICATION.
4. FOR NUMBER OF LUMINAIRES TO BE MOUNTED ON THE POLE, SEE ELECTRICAL PLANS.
5. FOUNDATION, POLE, BASE PLATE, AND ANCHOR BOLT DESIGN IS BASED ON A MAXIMUM OF 8 LUMINAIRES AND A MAXIMUM EFFECTIVE PROJECTED AREA (EPA) OF 14.5 FT^2, AND A MAXIMUM WEIGHT OF 770 LBS (INCLUDING FIXTURES, HOOD, AND LOWERING RING). INCREASE MINIMUM POLE DIAMETER IF REQUIRED TO ACCOMMODATE LOWERING DEVICE. LIMIT THE DESIGN DEFLECTION AT THE TOP OF THE POLE TO 10% OF THE POLE HEIGHT. SEE SHEET T-30.1.16 FOR POLE GROUNDING DETAIL.
6. DESIGN WIND PRESSURES ARE BASED ON A 3 - SECOND GUST SPEED OF 90 MPH AND A 50 YEAR DESIGN LIFE.
7. FATIGUE DESIGN BASED ON NATURAL WIND GUST LOADS AND FATIGUE IMPORTANCE CATEGORY I
8. SLIP FIT LENGTH SHALL NOT BE LESS THAN 1.5 DL.
9. BASE PLATE SHAPE OPTIONAL, EITHER ROUND OR HEXAGONAL AS SHOWN.
10. ANCHOR BOLTS SHALL BE MADE FROM STEEL BAR CONFORMING TO AASHTO M 314 GRADE 55 INCLUDING S1 SUPPLEMENTARY REQUIREMENTS.
11. THE FOLLOWING SOIL PARAMETERS WERE USED TO DETERMINE PILE LENGTH, "L":

Site Foundation Material	Minimum Dry Unit Weight (pcf)	Internal Friction Angle (deg)	Cohesion (psf)	Subgrade Modulus (pci)	Strain e_{50}
Stiff Clay	100	n/a	1000	n/a	0.01
Sand	110	30 ***	n/a	60	n/a
Gravel	125	35	n/a	175	n/a
Soft Clay	90	n/a	250	n/a	0.02

*** Increased to 35 deg for sloping ground surface condition

Site Foundation Material	Unit Weight (pcf)	Unconfined Compressive Strength (tsf)	Initial Rock Modulus E_{ir} (tsf)	Rock Constant k_{rm}	Rock Quality Designation (%)
Weak Rock	130	18	36,000	0.0005	50

12. PILE LENGTH, "L", BASED ON MAXIMUM ½" LATERAL DEFLECTION AT TOP OF PILE UNDER GROUP II LOADS.
13. ACCESS OPENING SHALL BE 11" x 30" WITH A LOCKABLE HINGED HANDHOLE COVER PLATE THE HANDHOLE SHALL BE GASKETED TO MAKE WATERPROOF. ACCESS OPENING SHALL BE REINFORCED AS REQUIRED IN THE STANDARD SPECIFICATIONS AND SHALL SUIT THE LOWERING DEVICE. SEE SHEET T-30.1.11.2 FOR HAND HOLE ORIENTATION.

NEVADA DEPARTMENT OF TRANSPORTATION

HIGH MAST LIGHT POLE & FOUNDATION DETAILS

Signed Original On File	T-30.1.11.1 (623)
CHIEF BRIDGE ENGINEER	ADOPTED 12/02 REVISION 1/09

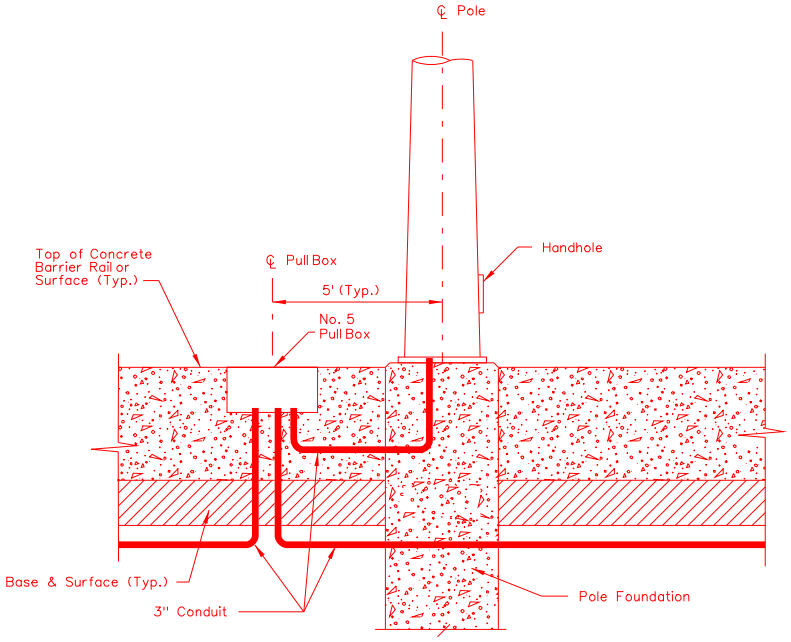

ELEVATION

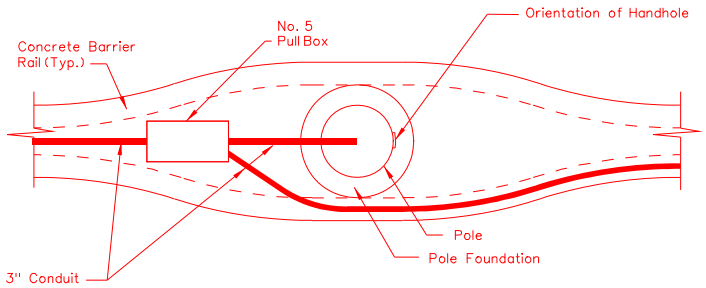

PLAN

INSTALLATION WITHIN CONCRETE BARRIER RAIL

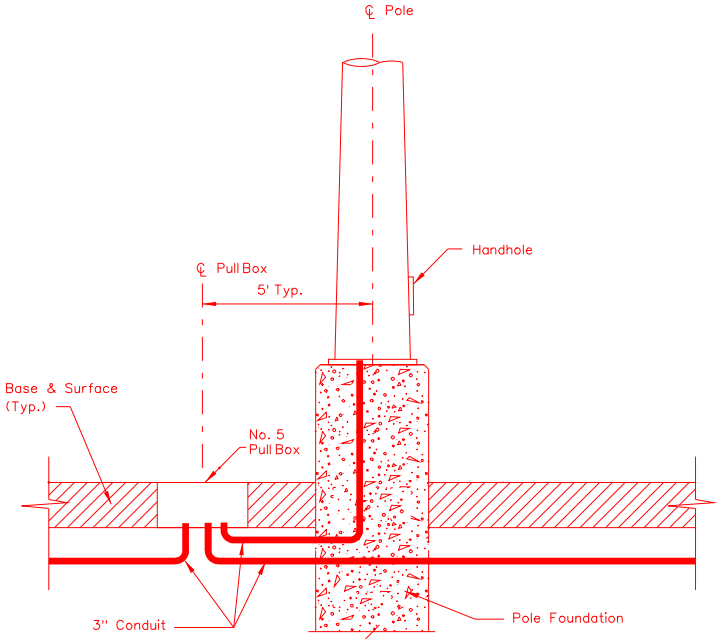

ELEVATION

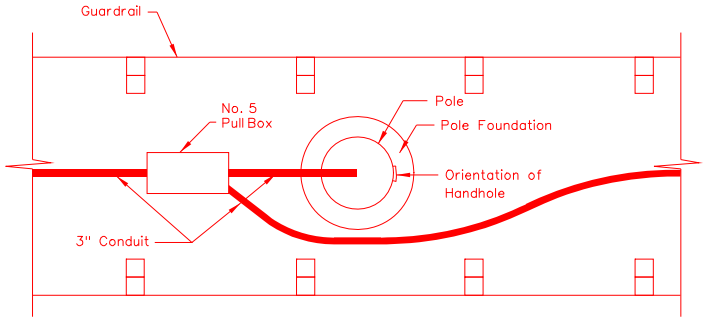

PLAN

INSTALLATION WITHIN GUARDRAIL

NEVADA DEPARTMENT OF TRANSPORTATION

PULL BOX
(IN MEDIAN BARRIERS)

Signed Original On File	T-30.1.11.2	(623)
CHIEF SAFETY/TRAFFIC ENGR.	ADOPTED 5/09	REVISION

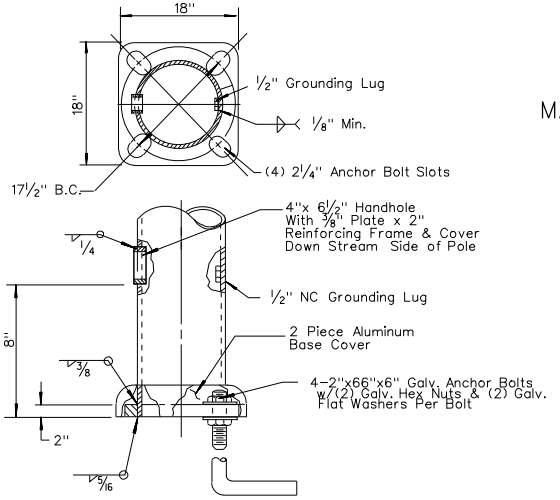

DETAIL B
POLE BASE

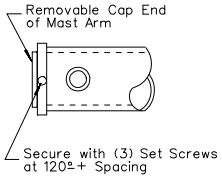

MAST ARM END CAP

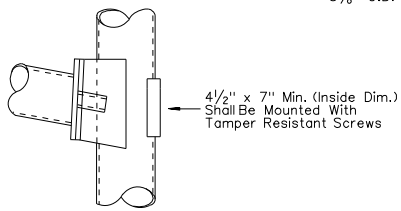

DETAIL D
HANDHOLE AND COVER
LOCATED 180° OPPOSITE MAST ARM

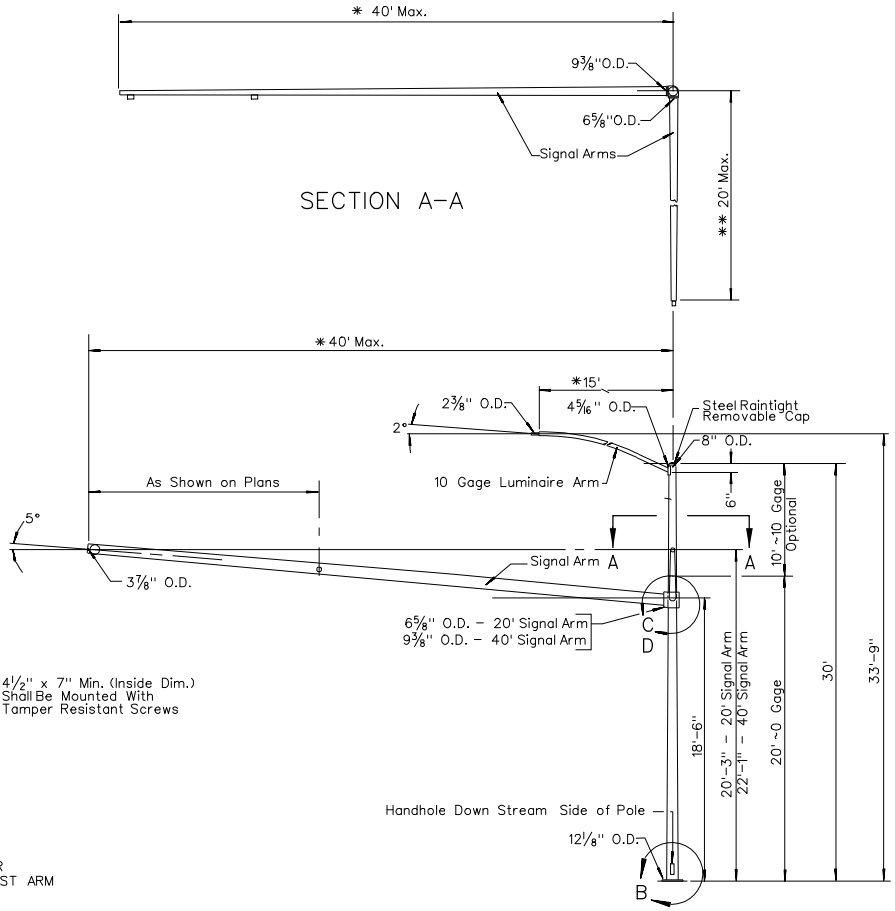

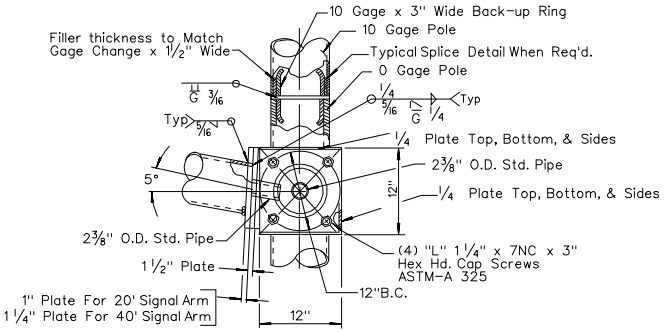

DETAIL C
SIGNAL ARM CONNECTION

NOTES:

1. FOR POLE FOUNDATION SEE SHEET T-30.1.16 FOR M-2 SIDEMOUNT DETAIL SEE SHEET T-30.1.3.
2. FOR LUMINAIRE ARM CONNECTION & LUMINAIRE TENON DETAIL SEE SHEET T-30.1.10.
3. THE DISTANCE FROM THE ROADWAY SURFACE TO THE BOTTOM OF THE MAST ARM SIGNAL HEADS SHALL BE 17'.

LEGEND:

* FOR LONGER MAST ARMS, ALL DRAWINGS & FOUNDATIONS MUST BE SUBMITTED FOR APPROVAL.

NEVADA DEPARTMENT OF TRANSPORTATION

TYPE 28 POLE

Signed Original On File	T-30.1.12	(623)
CHIEF SAFETY/TRAFFIC ENGR.	ADOPTED 12/79	REVISION 9/00

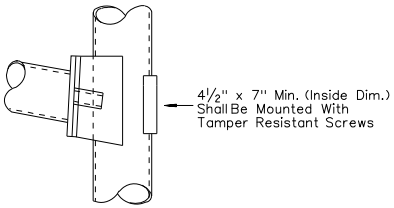

DETAIL A
Handhole and Cover
Located 180° Opposite Mast Arm

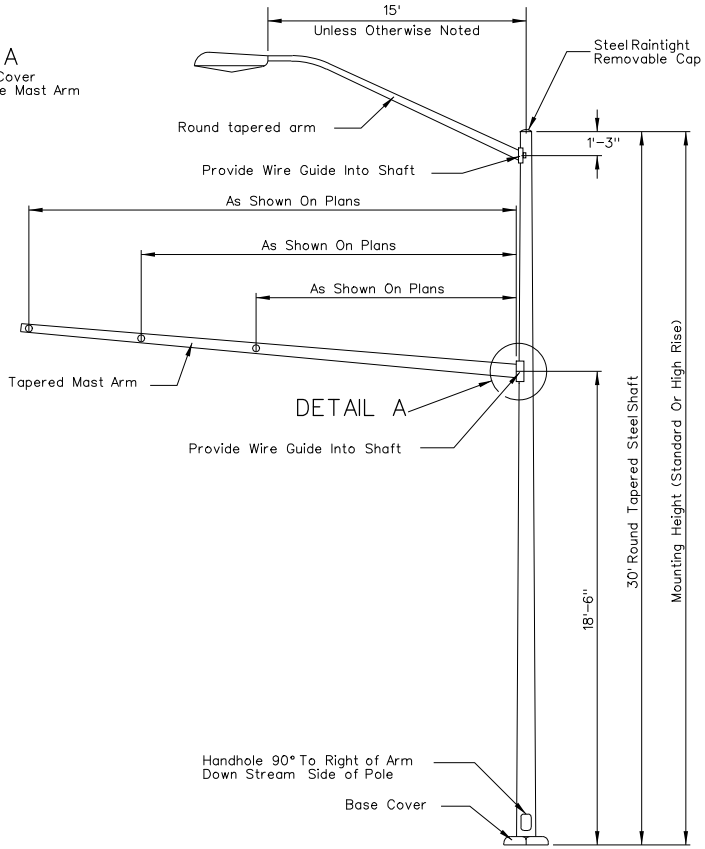

POLE TYPE 35 (MAST ARMS 45' AND LESS)
POLE TYPE 35-A (MAST ARMS 50' AND GREATER)

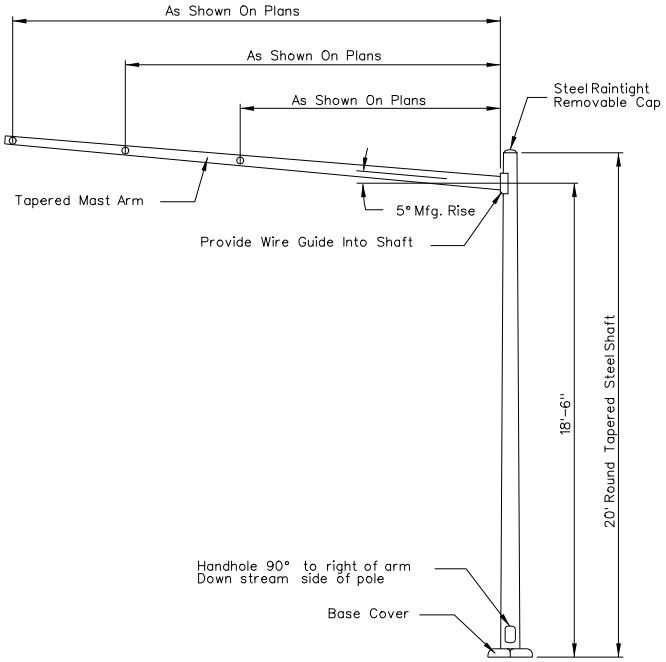

POLE TYPE 30 (MAST ARMS 45' AND LESS)
POLE TYPE 30-A (MAST ARMS 50' AND GREATER)

NOTES:

1. SHOP DRAWINGS AND STRUCTURAL CALCULATIONS SHALL BE SUBMITTED AND APPROVED BEFORE POLES MAY BE UTILIZED ON PROJECT.
2. IF INDICATED IN THE PLANS, ALL POLES SHALL BE PRIME PAINTED BY MANUFACTURER AND FINISH PAINTED BY CONTRACTOR. SEE STANDARD SPECIFICATION SECTION 714.03.01.
3. THE DISTANCE FROM THE ROADWAY SURFACE TO THE BOTTOM OF THE MAST ARM SIGNAL HEADS SHALL BE 17'.
4. SEE STANDARD PLAN DRAWING T-30.1.15 FOR POLE BASE, HANDHOLE, SIGNAL ARM, AND LUMINAIRE ATTACHMENT DETAILS.

NEVADA DEPARTMENT OF TRANSPORTATION

TYPE 30 AND 35 POLES

Signed Original On File	T-30.1.13		(623)
CHIEF SAFETY/TRAFFIC ENGR.	ADOPTED 7/96	REVISION 8/98	

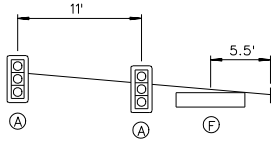

20' THRU 25' SPANS

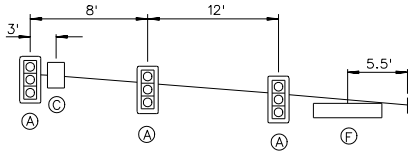

30' THRU 45' SPANS

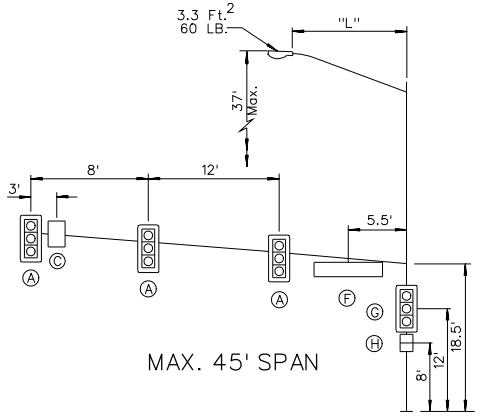

MAX. 45' SPAN

TYPE 30 & 35

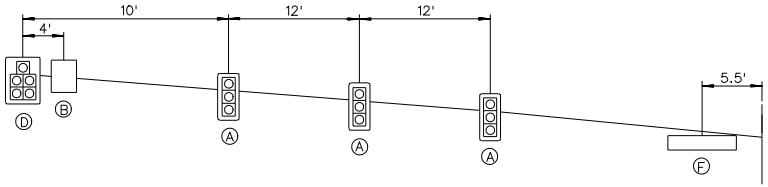

50' THRU 60' SPANS

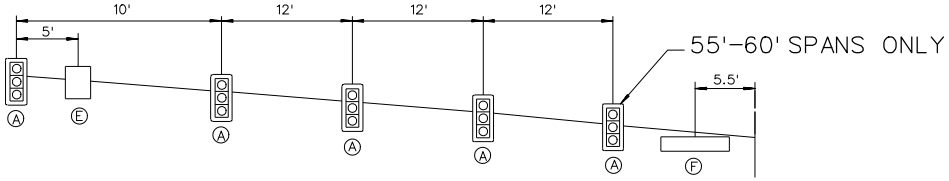

50' THRU 60' SPANS
ALTERNATE LOADING

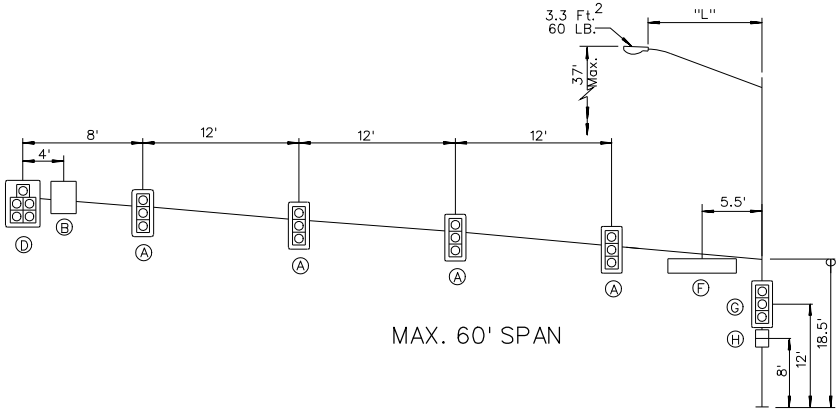

MAX. 60' SPAN

TYPE 30-A & 35-A

NOTE:
TYPE 30-A & 35-A POLE SHALL ALSO SUPPORT THE ALTERNATE LOADING SHOWN ABOVE.

DEVICE	DESCRIPTION	PROJECT AREA(Ft.2)	WEIGHT (LBS.)
Ⓐ SIGNAL	12"-3 Sec. w/Backplates (2M)	9.80	40
Ⓑ SIGN	--See Plans--	----	----
Ⓒ SIGN	R3-4 24" x 24"	4.00	10
Ⓓ SIGNAL	12"-5 Sec. w/Backplates	13.68	80
Ⓔ SIGN	R10-5d S 36" x 45"	11.25	30
Ⓕ SIGN	Street Name-Free Swinging 1.68' x 8'	13.44	100
Ⓖ SIGNAL	Dual-12"-3 Sec. w/Backplates	17.34	80
Ⓗ SIGNAL	Dual-Pedestrian	8.00	60

LUMINAIRE ARM DATA					
ARM SPAN "L" (FT.)	FIXED END DIA. (IN.)	FREE END DIA. (IN.)	GAUGE	LUMINAIRE MOUNTING HEIGHT	
				Low Rise	High Rise
6	3.42	2.38	11	31'	32'
8	3.75	2.38	11	31'-6"	33'-3"
10	4.16	2.38	11	31'-9"	35'
12	4.52	2.38	11	33'	36'-6"
15	4.95	2.38	11	33'-6"	37'

DESIGN CRITERIA:

AASHTO STANDARD SPECIFICATIONS FOR STRUCTURAL SUPPORTS FOR HIGHWAY SIGNS,LUMINAIRES AND TRAFFIC SIGNALS, 4th EDITION DATED 2001 AND CURRENT INTERIMS (EXCLUDING SECTION 11: FATIGUE DESIGN).

BASIC WIND SPEED = 90 MPH.

NEVADA DEPARTMENT OF TRANSPORTATION

TYPE 30 & 30A
35 & 35A
LOADING INFORMATION

Signed Original On File	T-30.1.14	(623)
CHIEF SAFETY/TRAFFIC ENGR.	ADOPTED 10/94	REVISION 12/02

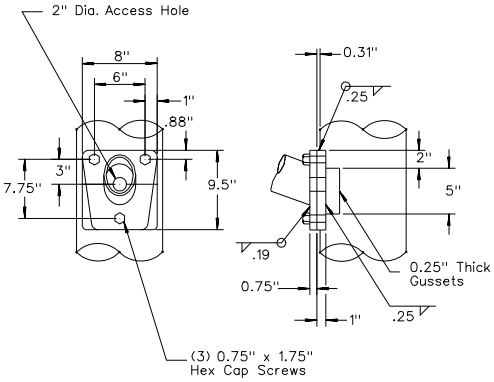

LUMINAIRE ARM ATTACHMENT

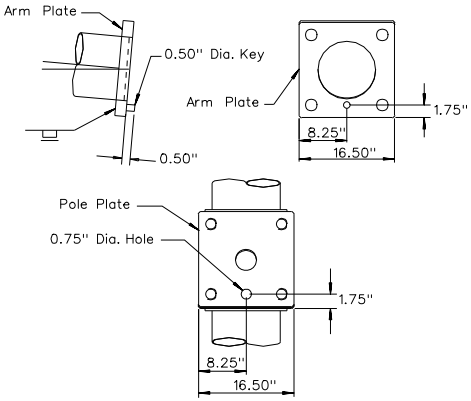

SIGNAL ARM SIMPLEX KEY

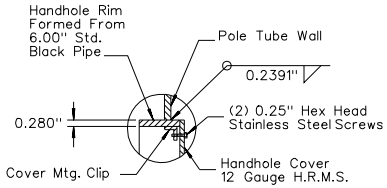

SECTION A–A

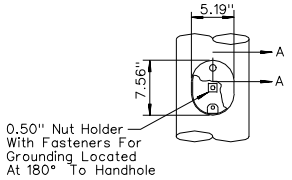

TYPE 30 & 35 HANDHOLE

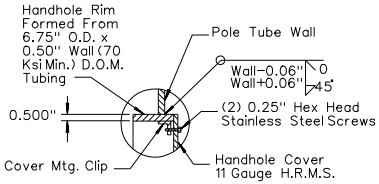

SECTION A–A

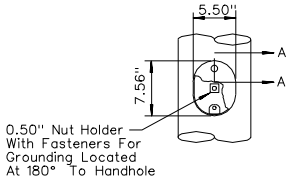

TYPE 30–A & 35–A HANDHOLE

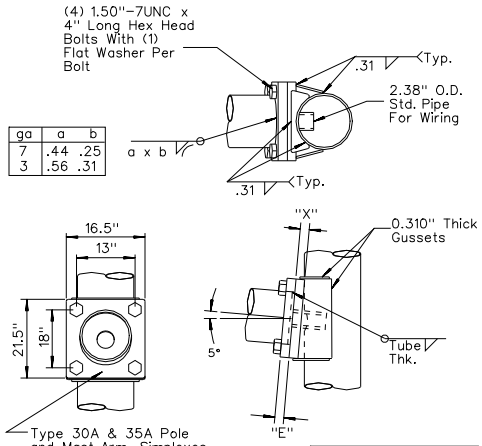

ga	a	b
7	.44	.25
3	.56	.31

TYPE	"X"	"E"
30 & 35	1.75"	1.50"
30A & 35A	2"	2"

SIGNAL ARM ATTACHMENT

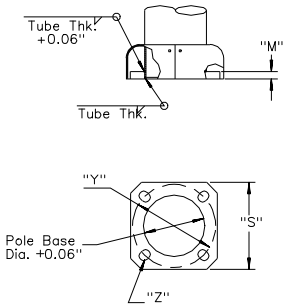

TYPE	SQUARE "S"	BOLT CIRCLE "Y"	THK. "M"	HOLE "Z"
30 & 35	17"	16.5"	1.50"	2"
30A & 35A	19"	19"	1.75"	2.25"

POLE BASE PLATE

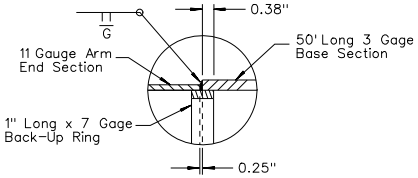

55' & 60' SIGNAL ARM SPLICE

NEVADA DEPARTMENT OF TRANSPORTATION

TYPE 30 & 30A
35 & 35A
DETAILS

Signed Original On File	T-30.1.15	(623)
CHIEF SAFETY/TRAFFIC ENGR.	ADOPTED 10/94	REVISION 12/02

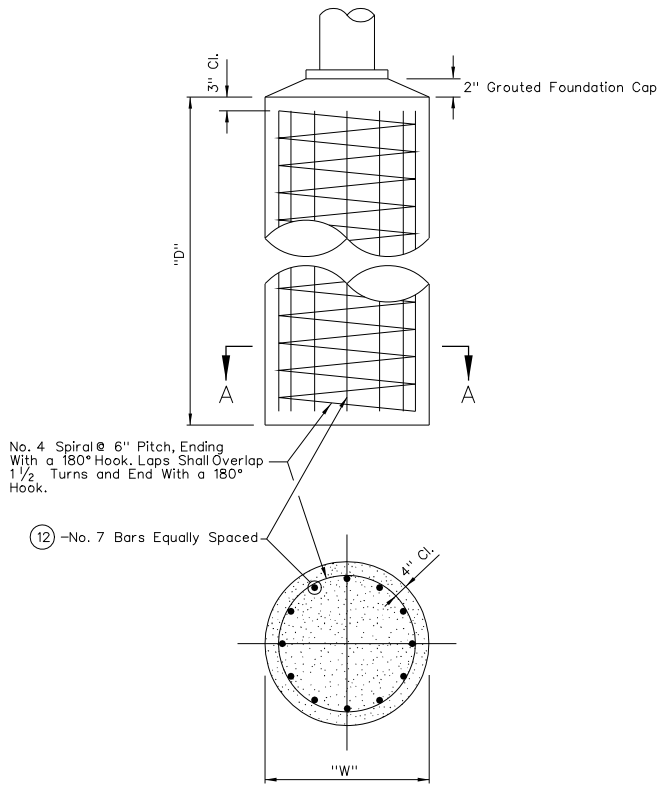

Note: Concrete Shall Be Class A or AA.

SECTION A–A
PILE FOUNDATION

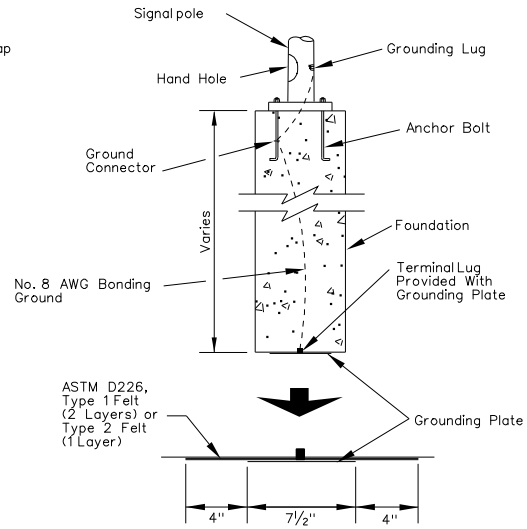

1. Connect Bonding Wire to the Reinforcing Steel Cage Near the Midpoint of the Foundation or Anchor Bolts.
2. Ground Plate Shall Be Made of Nonferrous Material (Typically Brass or Copper). Install "NSI" Ground Plate or Equivalent.

POLE GROUNDING DETAIL

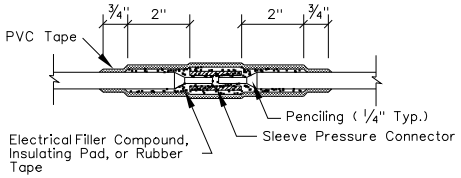

TYPE A SPLICE METHOD
(TWO FREE ENDS)

1. Completely Cover the Splice Area With An Electrical Insulating Coating and Allow to Dry.
2. Apply Electrical Filler Compound With Minimum Thickness of 1/8".
3. Apply 3 Layers of Half Lapped PVC Tape.

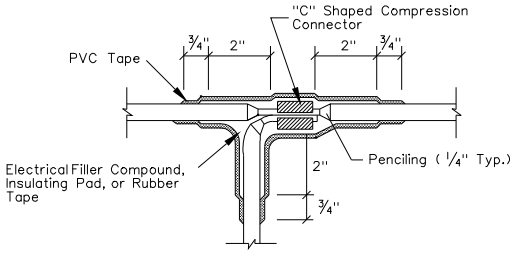

TYPE B SPLICE METHOD
(THREE FREE ENDS OR ONE FREE END AND ONE THROUGH CONDUCTOR)

1. Completely Cover the Splice Area With An Electrical Insulating Coating and Allow to Dry.
2. Apply 2 Layers of Electrical Insulating Pad With Minimum Thickness of 1/8" Each Layer or 2 Layers, Half Lapped, Synthetic Oil Resistant, Self Fusing Rubber Tape.
3. Apply 3 Layers of Half Lapped PVC Tape.

CONDUCTOR SPLICING METHODS

PILE FOUNDATION TABLE

POLE TYPE	MAST ARM LENGTH	**"D"	**"W" ①	ANCHOR BOLTS (4 EACH)
1A & 1B	N/A	3'	2'	3/4" x 18" x 4"
7	ALL	5'	2–6"	*1" x 36" x 4"
14	ALL	5'	2–6"	*1 1/2" x 48" x 4"
28	ALL	12'	3'	2" x 66" x 6"
30 AND 35	≤ 45'	12'	3'	1 3/4" x 60" x 6"
30A AND 35A	≤ 60'	12'	3'	2" x 66" x 6"

** Unless otherwise shown on plans.
* Not applicable when mounted on structures.
① – When "W" = 2'–0" use 4–No.5 bars equally spaced.
When "W" = 2'–6" use 8–No.5 bars equally spaced.

NOTES:

1. ALL DIMENSIONS ARE MINIMAL.
2. RUBBER TAPES SHALL BE ROLLED AFTER APPLICATION.
3. WHEN PVC TAPE IS USED AS A FINAL LAYER, PAINT FINISHED SPLICE WITH ELECTRICAL INSULATING COATING.

NEVADA DEPARTMENT OF TRANSPORTATION

PILE FOUNDATION, POLE GROUNDING DETAIL, CONDUCTOR SPLICE METHODS

Signed Original On File	T-30.1.16	(623)
CHIEF SAFETY/TRAFFIC ENGR.	ADOPTED 8/98	REVISION 5/09

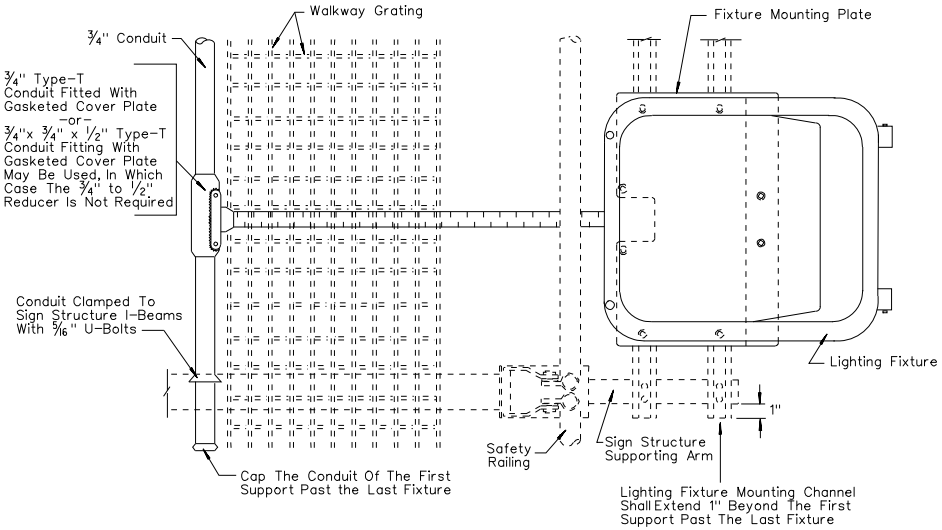

NOTES:

1. THE FIRST NUMBER LISTED IS THE DIMENSION FROM THE EDGE OF THE SIGN PANEL TO THE CENTER OF THE END-MOST FIXTURE. THE SECOND NUMBER LISTED IS THE DIMENSION BETWEEN CENTERS OF SUCCESSIVE FIXTURES.
2. WHERE ADJACENT SIGN PANELS ARE SPACED 1' OR LESS THE COMBINATION OF THESE PANELS (AND SPACES) SHALL BE CONSIDERED A SINGLE PANEL.
3. ALL BOLTS, NUTS, WASHERS, AND OTHER HARDWARE SHALL BE SAE GRADE 5 AND CADMIUM PLATED.

FIXTURE SPACING TABLE

LENGTH OF PANEL (FEET)	NUMBER OF FIXTURES (EACH)	FIXTURE SPACING (INCHES) SEE NOTES #1 & #2
5	1	30
6		36
7		42
8		48
9		54
10		60
11		66
12		72
13		78
14		84
15		90
16		96
17	2	51:102
18		54:108
19		57:114
20		60:120
21		63:126
22		66:132
23		69:138
24		72:144
25		75:150
26		78:156
27		81:162
28		84:168
29		87:174
30		90:180
31		93:186
32		96:192
33	3	66:132
34		68:136
35		70:140
36		72:144
37		74:148
38		76:152
39		78:156
40		80:160
41		82:164
42		84:168
43		86:172
44		88:176
45		90:180
46		92:184
47		94:188
48		96:192
49	4	73.5:147
50		75.0:150
51		76.5:153
52		78.0:156
53		79.5:159
54		81.0:162
55		82.5:165
56		84.0:168
57		85.5:171
58		87.0:174
59		88.5:177
60		90.0:180
61		91.5:183
62		93.0:186
63		94.5:189
64		96.0:192

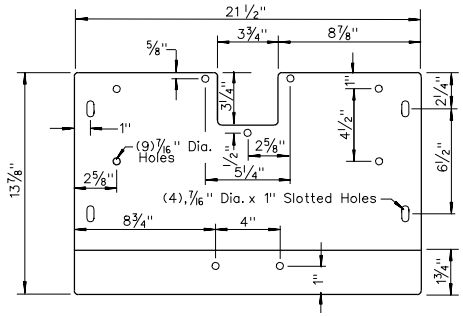

TOP VIEW

DETAIL
SIGN LIGHTING FIXTURE MOUNTING PLATE
Material Hot-Dip Galvanized Sheet Steel After Fabrication

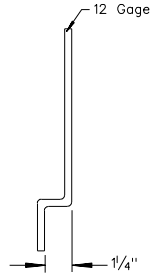

SIDE VIEW

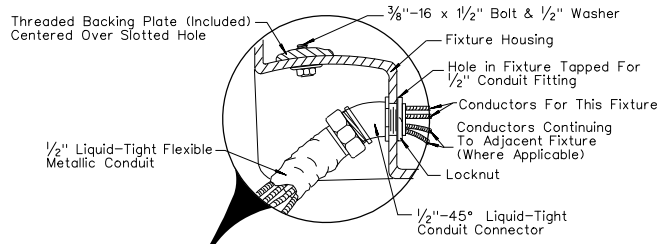

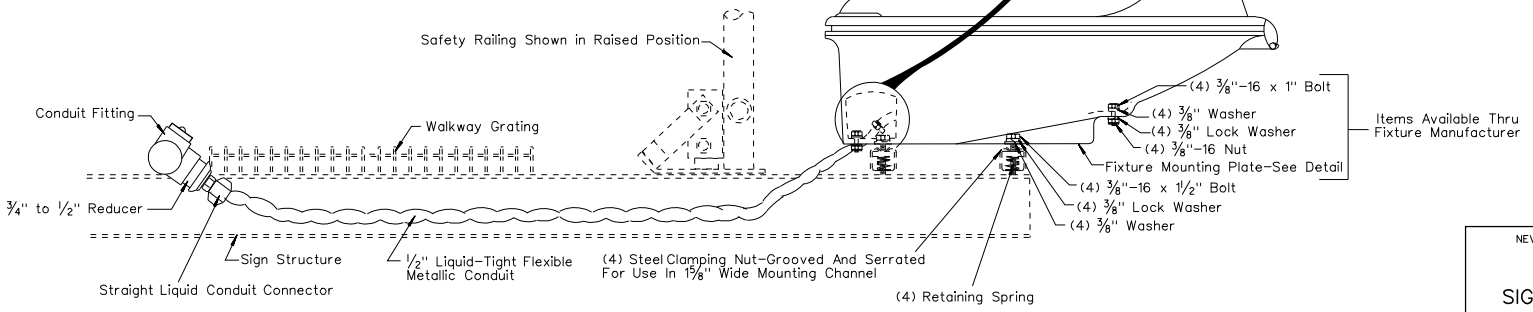

DETAIL
LIGHTING FIXTURE MOUNTING (TYPICAL)

NEVADA DEPARTMENT OF TRANSPORTATION

SIGN LIGHTING FIXTURES

Signed Original On File	T-30.1.16.1	(623)
CHIEF SAFETY/TRAFFIC ENGR.	ADOPTED 10/92	REVISION 3/97

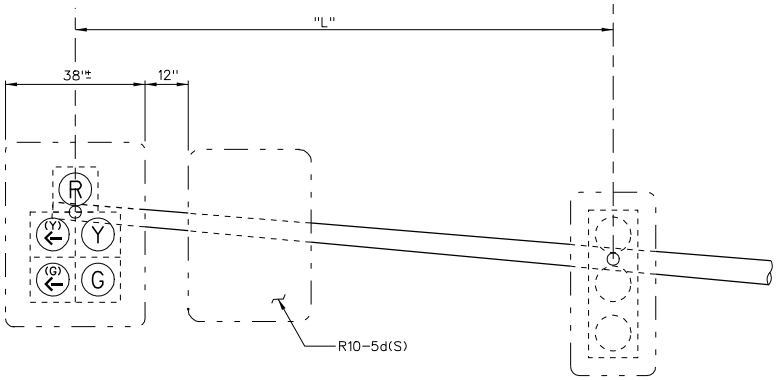

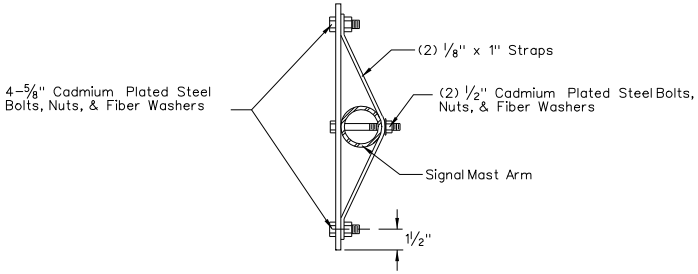

TYPICAL METHOD OF ATTACHMENT

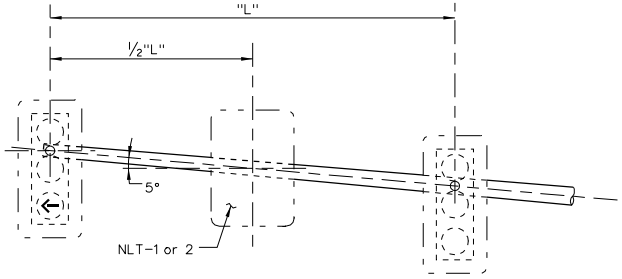

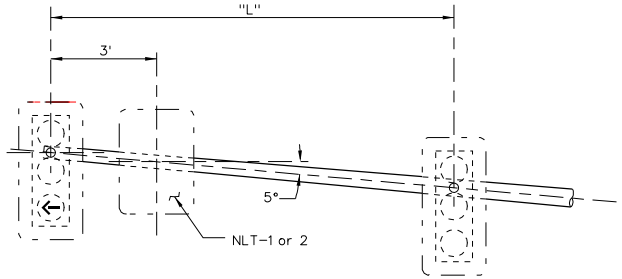

MAST ARM SIGNAL AND SIGN PLACEMENT

"L" = AS SHOWN ON PLANS

NEVADA DEPARTMENT OF TRANSPORTATION

TRAFFIC SIGNAL
SIGN PLACEMENT

Signed Original On File	T-30.1.17		(623)
CHIEF SAFETY/TRAFFIC ENGR.	ADOPTED 12/79	REVISION 3/97	

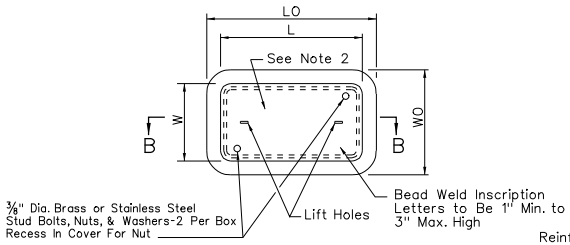

TOP VIEW

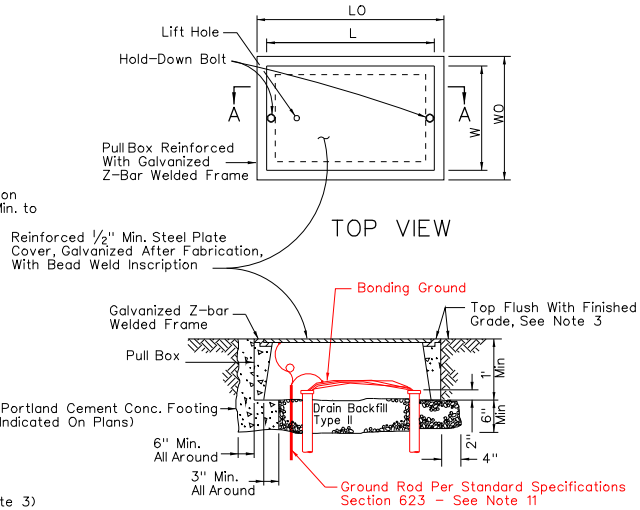

TOP VIEW

SECTION A-A

PULL BOX
No. 3 1/2, No. 5, No. 7 & No. 9

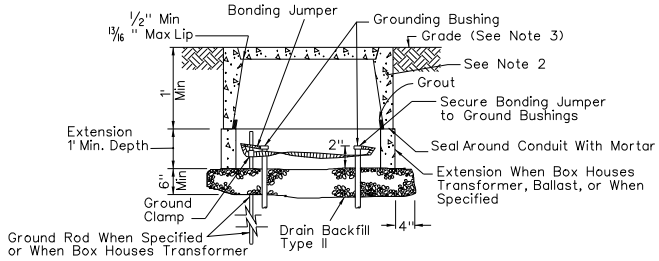

SECTION B-B

MODIFIED PULL BOX
No. 3 1/2, No. 5, No. 7 & No. 9

NOTES FOR PULL BOXES:

1. STEEL COVER SHALL HAVE EMBOSSED NON-SKID PATTERN.
2. STEEL REINFORCING SHALL BE PER MANUFACTURERS REQUIREMENTS.
3. TOP OF PULL BOXES SHALL BE FLUSH WITH SURROUNDING GRADE OR TOP OF ADJACENT CURB, EXCEPT THAT IN UNPAVED AREAS WHERE PULL BOX IS NOT IMMEDIATELY ADJACENT TO AND PROTECTED BY A CONCRETE FOUNDATION, POLE OR OTHER CONSTRUCTION, THE BOX SHALL BE PLACED WITH ITS TOP 1" ABOVE SURROUNDING GRADE. WHERE PRACTICABLE, PULL BOXES SHOWN IN THE VICINITY OF CURBS SHALL BE PLACED ADJACENT TO THE BACK OF CURB, AND PULL BOXES SHOWN ADJACENT TO STANDARDS SHALL BE PLACED ON SIDE OF FOUNDATION FACING AWAY FROM TRAFFIC, UNLESS OTHERWISE NOTED. WHEN PULL BOX IS INSTALLED IN SIDEWALK AREA, THE DEPTH OF THE PULL BOX SHALL BE ADJUSTED SO THAT THE TOP OF THE PULL BOX IS FLUSH WITH THE TOP OF SIDEWALK.
4. THE NOMINAL DIMENSIONS OF THE OPENING IN WHICH THE COVER SETS SHALL BE THE SAME AS THE COVER DIMENSIONS EXCEPT THE LENGTH AND WIDTH DIMENSIONS SHALL BE 1/8" GREATER.
5. ALL COVERS AND BOXES SHALL BE INTERCHANGEABLE WITH NEVADA STANDARD MALE AND FEMALE GAGES. WHEN INTERCHANGED WITH A STANDARD MALE OR FEMALE GAGE. THE TOP SURFACES SHALL BE FLUSH WITHIN 1/8". TOP OUTSIDE EDGE OF ALL CONCRETE COVERS AND PULL BOXES SHALL HAVE A 1/4" MINIMUM RADIUS.
6. PULL BOX SHALL NOT BE INSTALLED WITHIN THE BOUNDARIES OF NEW OR EXISTING CURB RAMPS.
7. PULL BOXES FOR ELECTROLIERS AND SIGNAL STANDARDS SHALL BE LOCATED AT THE SAME STATION (±5') AS THE ADJACENT ELECTROLIER OR SIGNAL STANDARD. PULL BOXES SHALL BE PLACED ADJACENT TO BACK OF CURB OR EDGE OF SHOULDER EXCEPT WHERE THIS IS IMPRACTICAL, A BOX MAY BE PLACED IN ANOTHER SUITABLE PROTECTED AND ACCESSIBLE LOCATION.
8. IN AREAS WHERE THE POSSIBILITY OF MATERIAL ERODING FROM AROUND THE PULL BOX EXISTS, THE PULL BOX SHALL BE PLACED IN DRAIN BACKFILL TYPE II-(2' DEPTH ON EACH SIDE AND 1' DEPTH), AS DIRECTED BY THE ENGINEER.
9. USE MODIFIED PULL BOXES ONLY WHEN INDICATED ON THE PLANS.
10. INSTALL CONDUIT PLUG ON EACH UNUSED CONDUIT OR INNERDUCT.
11. ALL METAL PULL BOX LIDS SHALL BE GROUNDED. INSTALL A STRANDED #4 (GREEN, 7-STRAND) THW WIRE, 4 FEET IN LENGTH, FROM THE LID TO THE BONDING GROUND. FASTEN THE #4 CONDUCTOR TO THE LID BY CAD WELDING.
12. ALL CONDUITS SHALL HAVE A MINIMUM OF 6" CLEARANCE FROM THE TOP OF THE CONDUIT TO THE COVER. SEAL ALL CONDUIT ENDS WITH A DUCT SEALING COMPOUND.

MODIFIED PULL BOX MINIMUM DIMENSION TABLE

Pull Box	CONCRETE BOX			NON-PCC BOX		CONCRETE OR NON-PCC COVERS				
	Minimum Depth Box and Extension	LO	WO	Minimum ** Thickness	Minimum Depth Box and Extension	L**	W**	R	Edge Thickness	Edge Taper
No. 3 1/2	No Extension	20"	14"	5/16"	No Extension	15 3/8"	10 1/4"	1"	2"	1/8"
No. 5	22 1/4"	28"	18"	5/16"	20"	23 1/4"	13 3/4"	1"	2"	1/8"
No. 6	24"	36"	23"	3/8"	20"	30 3/4"	17 3/4"	1"	2"	1/8"

** Top dimension

PULL BOX MINIMUM DIMENSION TABLE

Pull Box	CONCRETE BOX			STEEL COVER			EXTENSION
	LO	WO	Height	L**	W**	Edge Taper	Height
No. 3 1/2	19"±	12"±	12"±	14 1/2"±	8 3/4"±	None	12"
No. 5	25"±	15"±	12"±	20 1/2"±	10 1/2"±	None	10"
No. 7	35"±	22"±	12"±	30"±	17"±	None	8"
No. 9	52"±	35"±	14"±	47 3/4"±	30"±	None	10"

** Top Dimension
*** Top of Box

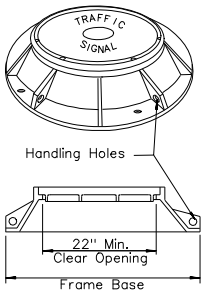

ELECTRICAL MANHOLE FRAME & COVER

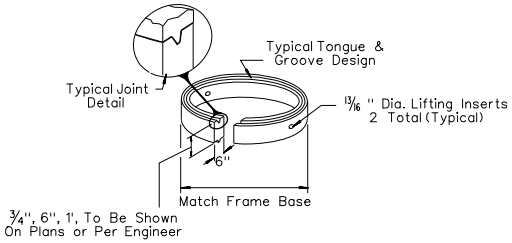

COLLAR RISER

NOTES FOR ELECTRICAL MANHOLE:

1. A COMPACTED BASE AND A CONCRETE FOOTING SUPPORT SHALL BE CONSTRUCTED PRIOR TO PLACEMENT OF THE CAST IRON FRAME AS DIRECTED BY THE ENGINEER.
2. ADJUSTMENTS TO ELEVATIONS SHALL BE MADE WITH COLLAR/RISERS AS REQUIRED. MINIMUM DEPTH 18".
3. REFER TO STANDARD PLAN R-4.7.3 FOR CONCRETE COLLAR DETAILS.

NEVADA DEPARTMENT OF TRANSPORTATION

PULL BOXES/ ELECTRICAL MANHOLE FRAME & COVER

Signed Original On File	T-30.1.18	(623)
CHIEF SAFETY/TRAFFIC ENGR.	ADOPTED 7/96	REVISION 5/09

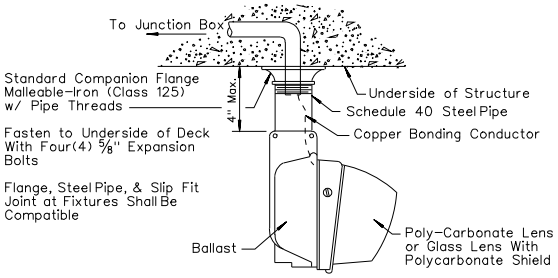

TYPE A UNDERPASS LUMINAIRE

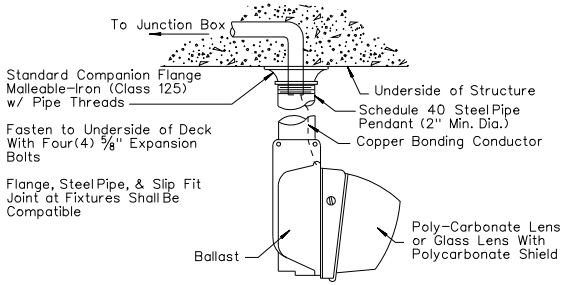

TYPE C UNDERPASS LUMINAIRE

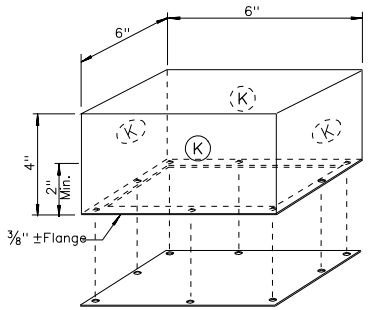

DETAIL J
JUNCTION BOX

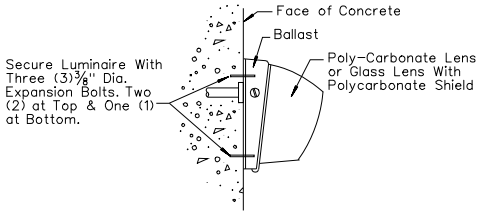

TYPE B UNDERPASS LUMINAIRE

NOTES:

1. JUNCTION BOX AND COVER SHALL BE 16 GAUGE STEEL.
2. GALVANIZE ASSEMBLY AFTER FABRICATION.
3. BOX SHALL BE FLUSH WITH BOTTOM OF STRUCTURE.
4. FASTEN COVER BY DRILL AND TAP WITH EIGHT (8) #10-24 UNC BRASS SCREWS.
5. COVER SHALL BE ON BOX DURING POURING.
6. AN EQUIVALENT APPROVED MANUFACTURER'S BOX MAY BE USED IN LIEU OF DETAIL J JUNCTION BOX.
7. (K) KNOCK OUT FOR 1" CONDUIT. BOTTOM SHALL BE MIN. OF 3 1/2" ABOVE COVER TO CLEAR STRUCTURAL STEEL.

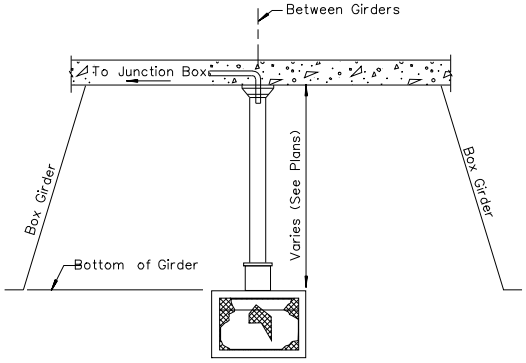

PENDANT INSTALLATION
TYPE C UNDERPASS LUMINAIRE

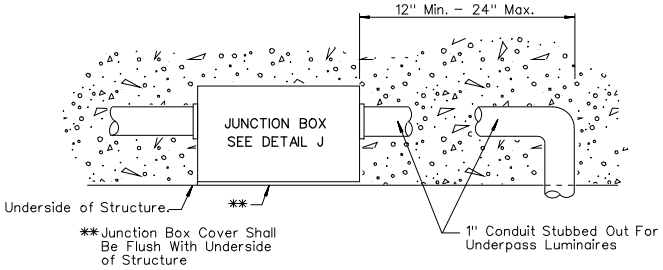

DETAIL B

NEVADA DEPARTMENT OF TRANSPORTATION

UNDERPASS LUMINAIRES
& JUNCTION BOX

Signed Original On File	T-30.1.19	(623)
CHIEF SAFETY/TRAFFIC ENGR.	ADOPTED 12/79	REVISION 10/06

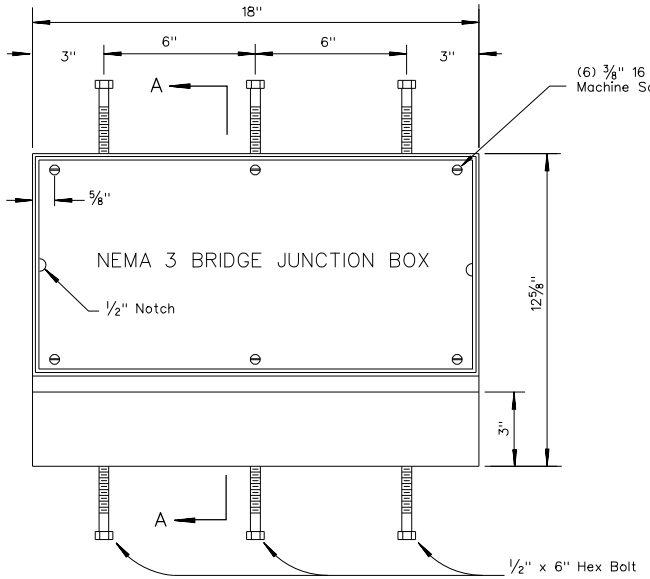

NOTES:

1. SEAM WELD CONSTRUCTION W/ 3/16" DIAMETER FILLET WELD OUTSIDE EDGES. TACK WELD CONSTRUCTION FOR INNER FRAME AND ANGLE 1/4" x 3/4" x 5" CENTERS.
2. GASKET MATERIAL 1/8" x 2" NEOPRENE EPDM AND SBR SPONGE WITH PSA.
3. WHERE CAP SCREWS ARE USED TO ATTACH COVER TO BOX, EITHER OF THE FOLLOWING METHODS OF PROVIDING ADEQUATE THREADING MAY BE USED:
   A. TACK WELD SQUARE NUT TO BOTTOM OF FLANGE (TOTAL 4), OR
   B. TACK WELD A 1/4" x 5/8" x 8" BAR BENEATH FLANGE (TOTAL 2).
4. DO NOT CUT OR WELD TO BRIDGE RAIL REINFORCING STEEL.

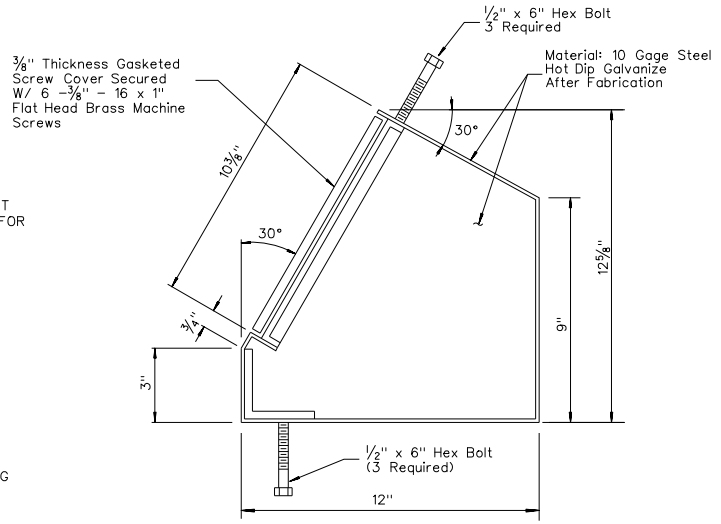

SECTION A-A

TYPE 1

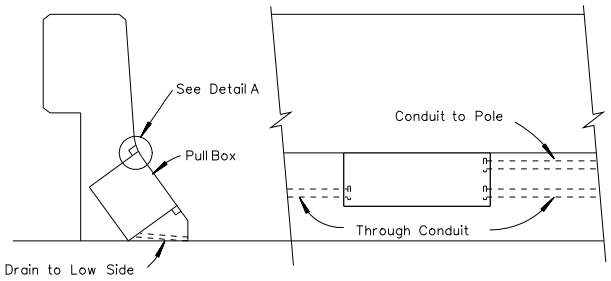

INSTALLATION IN SLOPING PARAPETS

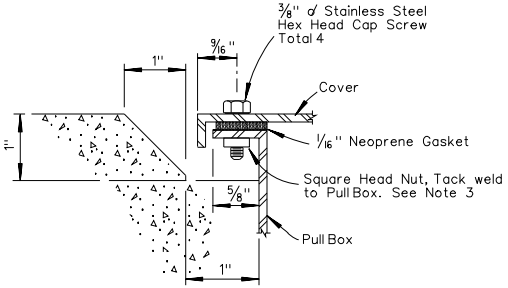

DETAIL A

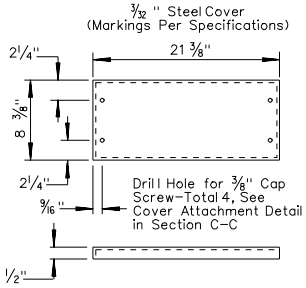

COVER DETAILS

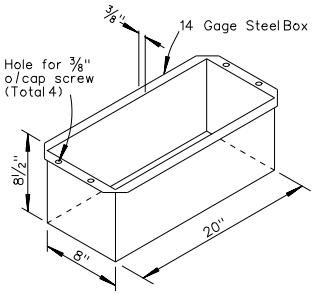

PULL BOX DETAIL

TYPE 2

NEVADA DEPARTMENT OF TRANSPORTATION

BRIDGE / BARRIER RAIL
JUNCTION BOX
TYPE 1 AND 2

Signed Original On File	T-30.1.20	(623)
CHIEF SAFETY/TRAFFIC ENGR.	ADOPTED 7/96	REVISION 10/06

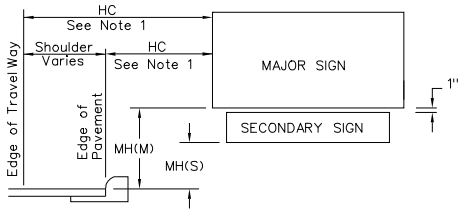

SIGN LOCATION (GENERAL)

	Single Signs	Double Signs
Freeways And Expressways	7'	8' (M) 5' (S)
Commercial, Residential Curb and Gutter	7'	7' (M) 6' (S)
Rural Roads And Interchange Ramps	7'	7' (M) 6' (S)
Freeway Entrance Assembly	2'	2' (S)
Chevrons & One Way	4'	N/A

(M) MAJOR SIGN (S) SECONDARY SIGN

MINIMUM MOUNTING HEIGHTS (MH)

NOTES:

1. HORIZONTAL CLEARANCE (HC) SHOULD NOT BE LESS THAN 6' FROM THE EDGE OF PAVEMENT. IF NO SHOULDER, HC SHOULD NOT BE LESS THAN 12' FROM THE EDGE OF TRAVEL WAY. IN URBAN AREAS, A LESSER CLEARANCE MAY BE USED WHERE NECESSARY.
2. FOR SIGN PANEL BRACING DETAILS, SEE T-31.1.4.
3. ALL SIGN SUPPORTS SHALL BE OF BREAKAWAY DESIGN.
4. FOR DOUBLE POST BRACES SUPPORTS, MAINTAIN HC> CLEAR ZONE WIDTH MAXIMUM OF 30', EXCEPT WHEN PROTECTED BY GUARDRAIL OR BARRIER RAIL. FOR CLEAR ZONE WIDTHS, REFER TO AASHTO ROADSIDE DESIGN GUIDE CURRENT EDITION.
5. SIGN ISLAND REQUIRED WHEN H>15', OR SIGN SLOPE IS STEEPER THAN 6:1, OR WHEN REQUIRED IN CONTRACT PLANS.
6. SEE SHEET T-31.1.6 FOR SIGN ISLAND CONSTRUCTION.
7. FOR SIGN POSTS, SEE POST SELECTION CHARTS ON SHEET T-31.1.2.
8. FOR MATERIALS NOT DIRECTLY SPECIFIED, SEE STANDARD SPECIFICATIONS AND SPECIAL PROVISIONS.
9. SIGN PANELS TO BE ALUMINUM SHEET CONSTRUCTION.
10. PREPAINT THE EXPOSED PORTION OF FASTENING HARDWARE ON THE FACE OF THE SIGN PANELS WITH BAKED ENAMEL TO MATCH THE SIGN FACE.

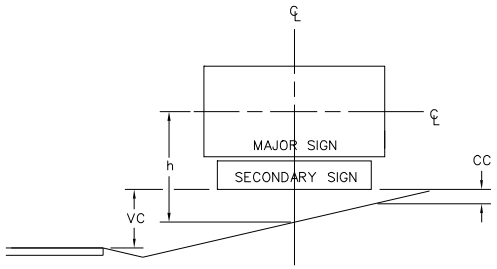

SIGN IN EXCAVATION

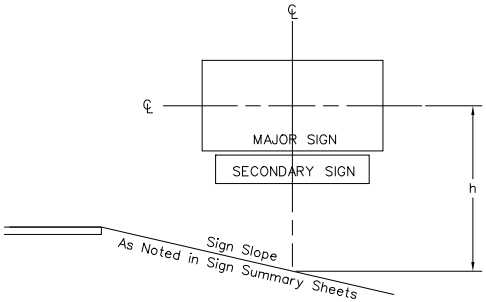

SIGN IN EMBANKMENT

Minimum Corner Clearance(CC)= 1'
Maximum Vertical Clearance(VC) for Single Sign= 10', Double Sign= 11'
Maximum h=15'
Special Design May Be Necessary If Given Limits Are Exceeded

NEVADA DEPARTMENT OF TRANSPORTATION

ROADSIDE SIGNS
GENERAL
SIGN LOCATION

Signed Original On File	T-31.1.1 (627)	
CHIEF SAFETY/TRAFFIC ENGR.	ADOPTED 8/69	REVISION 9/04

POST SELECTION CHART

SIGN AREA(a) (SQ. FT.)	h(FT.)					
	0'≤h<8'	8'≤h<10'	10'≤h<12'	12'≤h<14'	14'≤h<15'	15'≤h<17'
0≤a< 6.5	A	A	A	A	A	B
6.5≤a<8.5	A	A	A	B	B	C
8.5≤a<11	A	A	B	C	C	C
11≤a<13	A	B	C	C	C	D
13 ≤a<15	A	C	C	D	D	D
15≤a< 17	B	C	C	D	D	F
17≤a<19.5	C	C	D	D	D	F
19.5≤a<21.5	C	C	D	E	F	F
21.5≤a<23.5	C	C	D	E	F	F
23.5 ≤a<43	C	C	E	E	F	F
43≤a<70	E	E	E	E	F	F
70≤a<140	E	E	E	E	F	F
140≤a<200	E	E	E	F	F	F

NOTES:

1. SIGN AREA IS TOTAL OF MAJOR & SECONDARY SIGNS.
2. ALTERNATE POSTS MUST BE APPROVED BY TRAFFIC ENGINEERING.
3. FOR DOUBLE POST BRACED SUPPORTS, MAINTAIN HC > CLEAR ZONE WIDTH MAXIMUM OF 30', EXCEPT WHEN PROTECTED BY GUARDRAIL OR BARRIER RAIL. FOR CLEAR ZONE WIDTHS, REFER TO AASHTO ROADSIDE DESIGN GUIDE CURRENT EDITION.

POST SELECTION CHART

POST TYPE	DESCRIPTION	REFERENCE SHEET
A	2½" Square Metal Post (12 Gage)–Single Post	T–31.2.1
B	2½" Square Metal Post (10 Gage)–Single Post	T–31.2.1
C	Single Post Unbraced 3" Dia Round Metal Post	T–31.3.1 thru T–31.3.2
D	Double Post Unbraced 3" Dia Round Metal Post	T–31.3.1 thru T–31.3.2
E	Double Post Braced (See Note 3) Post–3" Dia Round Metal Post Brace–3" Dia Round Metal Post	T–31.4.1 thru T–31.4.3
F	Special Design: Contact Traffic Engineering	

NEVADA DEPARTMENT OF TRANSPORTATION

ROADSIDE SIGNS
GENERAL
POST SELECTION CHARTS

Signed Original On File	T-31.1.2	(627)
CHIEF SAFETY/TRAFFIC ENGR.	ADOPTED 7/96	REVISION 12/04

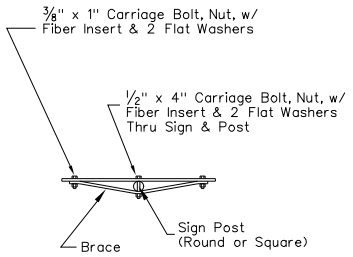

TOP VIEW
(ALL PANELS)

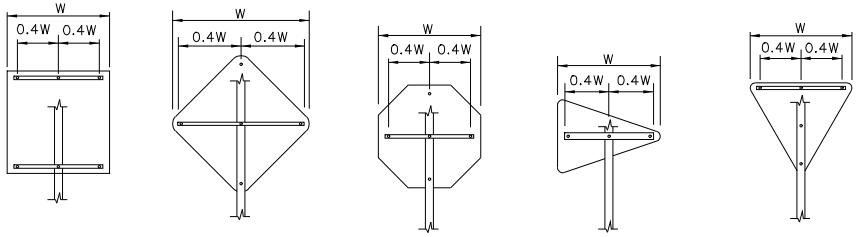

TYPICAL SINGLE PANEL BRACING

TYPICAL MULTIPLE PANEL BRACING

NOTES:

1. BRACE(S) REQUIRED IF W > 18". INSTALL AS SHOWN.
2. BRACE: 3/8" x 1 1/4" ALUMINUM ALLOY.
3. COST FOR BRACING IS INCLUDED IN SIGN.

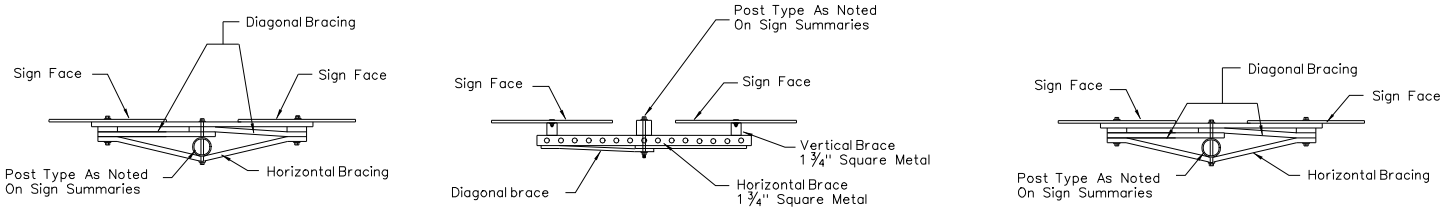

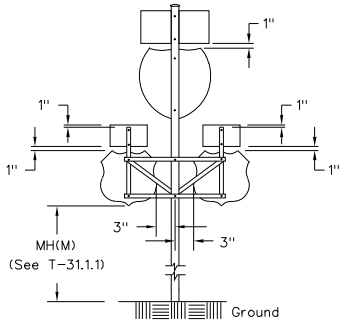

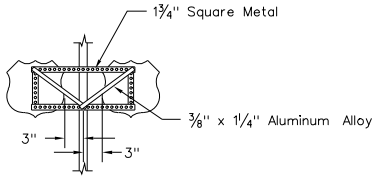

ALTERNATE BRACING
SQUARE METAL POST

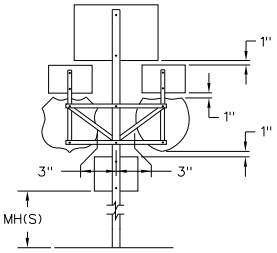

TYPICAL
FREEWAY ENTRANCE

TYPICAL ROUTE MARKER ASSEMBLY

NEVADA DEPARTMENT OF TRANSPORTATION

ROADSIDE SIGNS
GENERAL
SIGN PANEL BRACING

Signed Original On File	T-31.1.3		(627)
CHIEF SAFETY/TRAFFIC ENGR.	ADOPTED 7/96	REVISION 12/04	

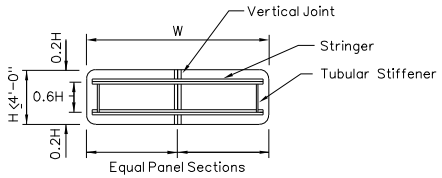

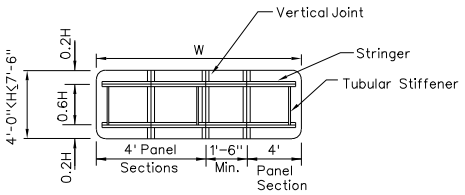

2 STRINGER MOUNTING

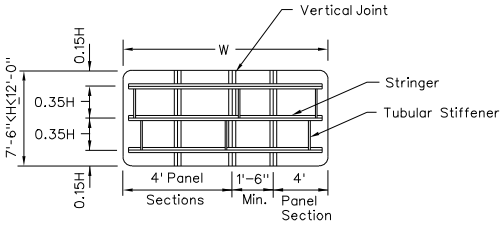

3 STRINGER MOUNTING

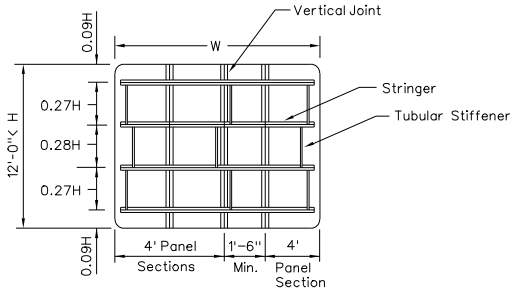

4 STRINGER MOUNTING

NOTE:

To obtain desired panel width, Max. of 2 Panels May Be Cut Less Than 4', (1'-6" Min. Each)

SUB PANEL ASSEMBLY & Z BAR BRACING

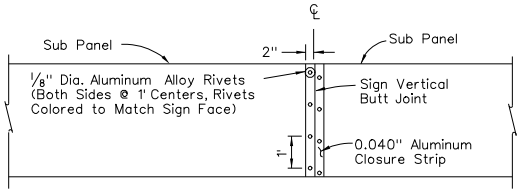

VERTICAL JOINT CLOSURE STRIP

NOTES:

1. STRINGERS: 3" x 2 11/16" x 1/4" OR 2 11/16" x 2 11/16" x 1/4" ALUMINUM ALLOY Z-BAR.
2. STRINGERS REQUIRED ON ALL SIGNS REQUIRING MULTIPLE POSTS.
3. TUBULAR STIFFENERS REQUIRED WHEN W>10'.
4. COST FOR BRACING IS INCLUDED IN SIGN.
5. ONE VERTICAL JOINT IF W EXCEEDS 12'. TWO VERTICAL JOINTS IF W EXCEEDS 24'.
6. FOR ALTERNATE STEEL TUBE BRACING, SEE STANDARD PLAN T-31.1.5.

NEVADA DEPARTMENT OF TRANSPORTATION

ROADSIDE SIGNS
GENERAL
SIGN PANEL BRACING

Signed Original On File	T-31.1.4		(627)
CHIEF SAFETY/TRAFFIC ENGR.	ADOPTED 8/69	REVISION 10/04	

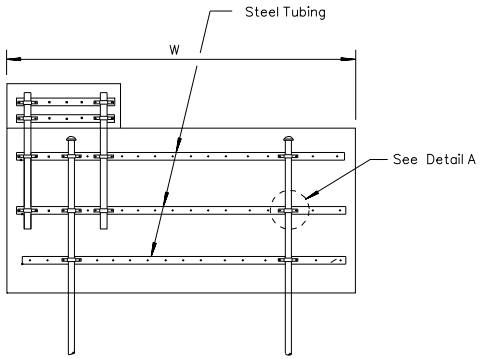

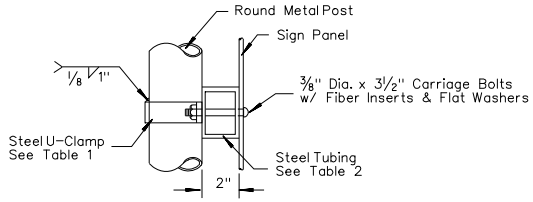

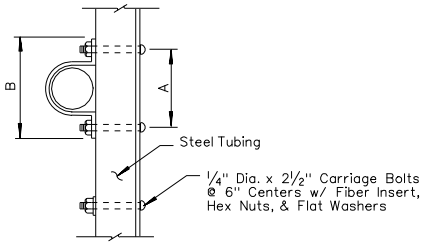

DETAIL A

STEEL TUBE BRACING ON ROUND METAL POSTS

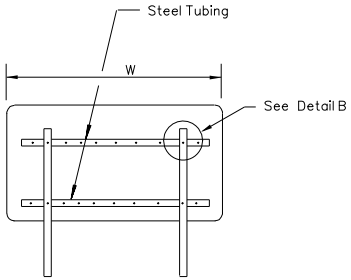

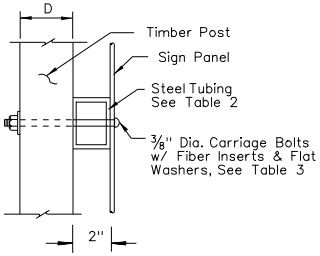

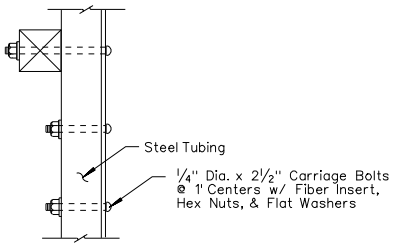

DETAIL B

STEEL TUBE BRACING ON WOOD POSTS

NOTES:

1. FOR SUB-PANEL ASSEMBLY, & VERTICAL JOINT CLOSURE STRIP DETAILS, SEE STANDARD PLAN T-31.1.4.

TABLE 1
(Clamp Sizes)

PIPE DIA.	O.D.	A	B	CLAMP STOCK
3" Nom.	3 1/2"	5 3/16"	6 13/16"	1/4" x 1 1/2"

TABLE 2
(Tubing Size)

SIGN WIDTH (W)	TUBING SIZE
24' or Less	3"x2"x 3/16"
24' to 28'	4"x2"x 3/16"

TABLE 3

POST SIZE	"D"	BOLT SIZE
4" x 4"	3 1/2"	3/8" Dia. x 6 1/4"
4" x 6"	5 1/2"	3/8" Dia. x 6 1/4"
6" x 6"	5 1/2"	3/8" Dia. x 8 1/4"
6" x 8"	7 1/2"	3/8" Dia. x 10 1/4"

NEVADA DEPARTMENT OF TRANSPORTATION

ROADSIDE SIGNS
GENERAL
SIGN PANEL BRACING

Signed Original On File	T-31.1.5	(627)
CHIEF SAFETY/TRAFFIC ENGR.	ADOPTED 8/82	REVISION 8/98

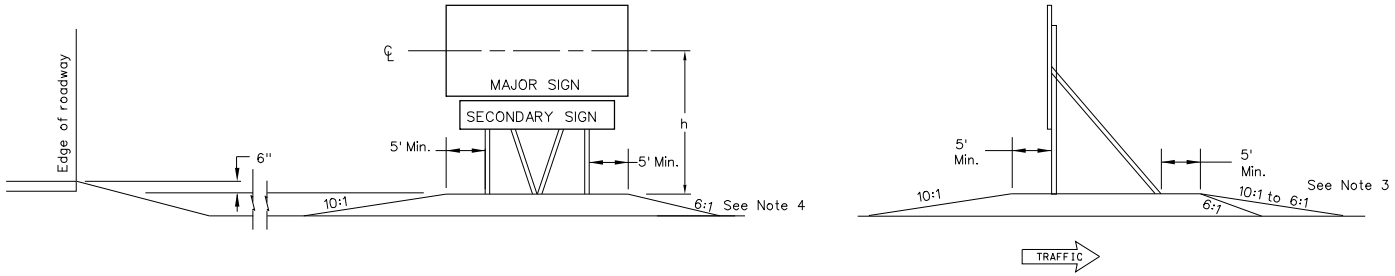

DOUBLE POST BRACED

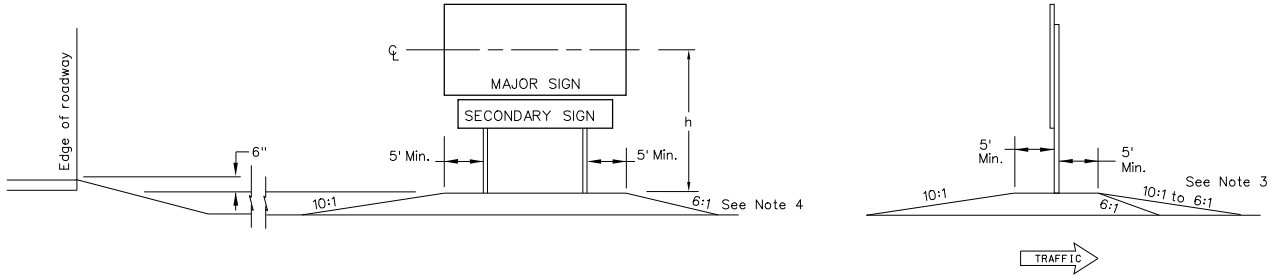

DOUBLE POST UNBRACED

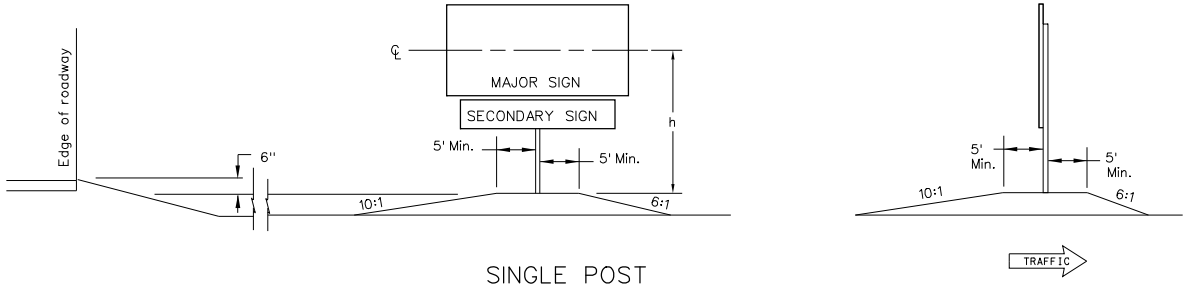

SINGLE POST

NOTES:

1. SIGN ISLANDS TO BE COMPACTED TO 95%.
2. PAYMENT FOR SIGN ISLAND WILL BE AS NOTED IN CONTRACT PLANS AND SPECIAL PROVISIONS.
3. UNDIVIDED ROUTES USE 10:1. ALL DIVIDED ROUTES USE 6:1.
4. USE 2:1 MAX FOR NARROW RIGHT-OF-WAYS OR 6:1 PREFERRED FOR ALL OTHERS.

NEVADA DEPARTMENT OF TRANSPORTATION

ROADSIDE SIGNS
GENERAL
SIGN ISLANDS

Signed Original On File	T-31.1.6	(627)
CHIEF SAFETY/TRAFFIC ENGR.	ADOPTED 10/68	REVISION 6/00

NOTES:

1. FOOTINGS TO BE DRILLED HOLES AS SHOWN, & FILLED WITH CLASS A OR CLASS AA CONCRETE.
2. ANCHOR POST INCLUDED IN COST OF SIGN POST.
3. FOR DETAILS ON SIGN LOCATION, POST TYPE, PANEL BRACING, AND SIGN ISLANDS, SEE STANDARD PLAN T-31.1.1 THRU T-31.1.6.

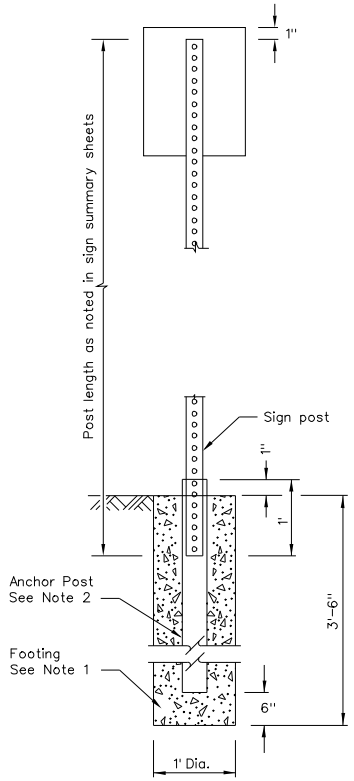

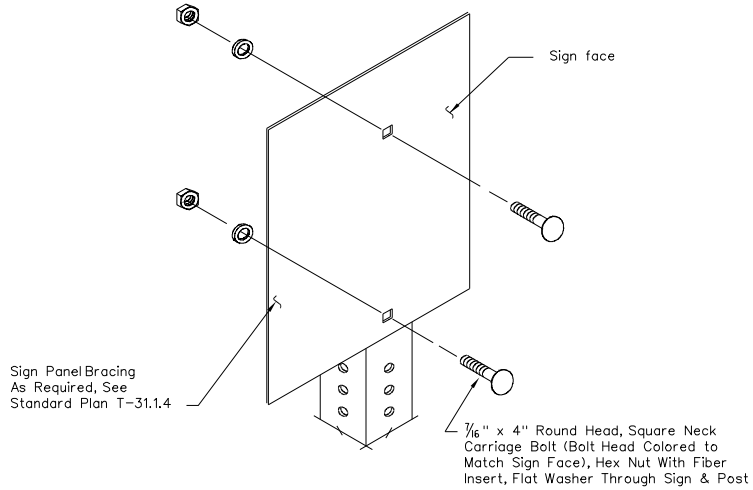

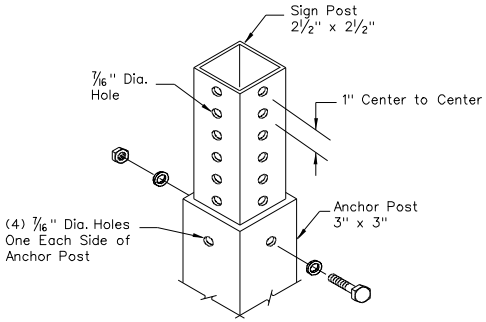

NEVADA DEPARTMENT OF TRANSPORTATION

ROADSIDE SIGNS
SQUARE METAL POSTS

Signed Original On File	T-31.2.1	(627)
CHIEF SAFETY/TRAFFIC ENGR.	ADOPTED 8/98	REVISION

NOTES:

1. ANCHOR POST INCLUDED IN COST OF SIGN POST.
2. FOR DETAILS ON SIGN LOCATION, POST TYPE, PANEL BRACING, AND SIGN ISLANDS, SEE STANDARD PLAN T-31.1.1 THRU T-31.1.6.
3. INNER POSTS ARE THOSE CLOSEST TO ROADWAY, AND THE OUTER POSTS ARE THOSE FARTHEST AWAY.

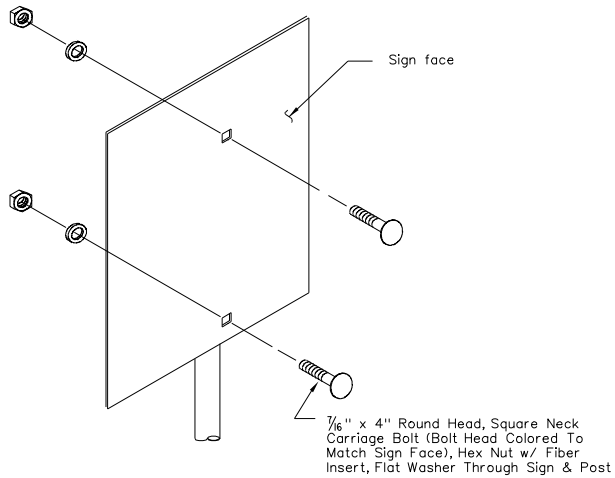

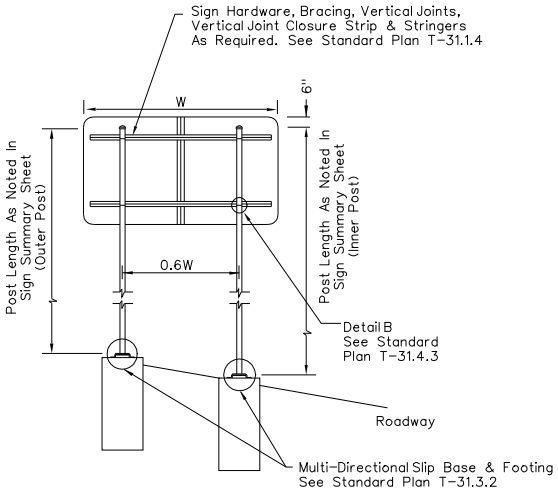

DOUBLE POST UNBRACED

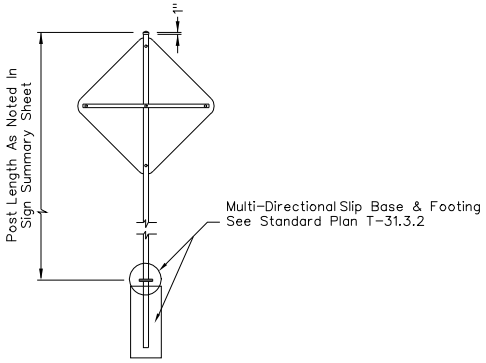

SINGLE POST

NEVADA DEPARTMENT OF TRANSPORTATION

ROADSIDE SIGNS
ROUND METAL POSTS
UNBRACED

Signed Original On File	T-31.3.1	(627)
CHIEF SAFETY/TRAFFIC ENGR.	ADOPTED 8/98	REVISION

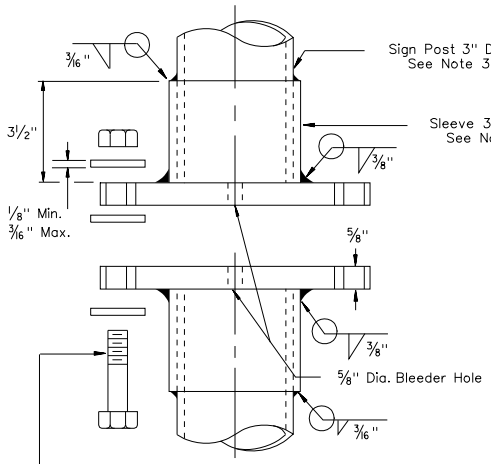

ASSEMBLY ELEVATION VIEW

5/8"-11 x 3 1/8" Bolt, Type 1 ASTM A 325 or Type 1 ASTM A 449 (Grade 5); Each With Three USS Through Hardened Washers ASTM F 436 Type 1; And One Nylon Insert Stop Nut ASTM A 563 DH. All Items Shall Be Galvanized As Per Manufacturer's Specifications. Torque Within the Range of 24-29 Ft-Lb. See BOLT DETAIL below.

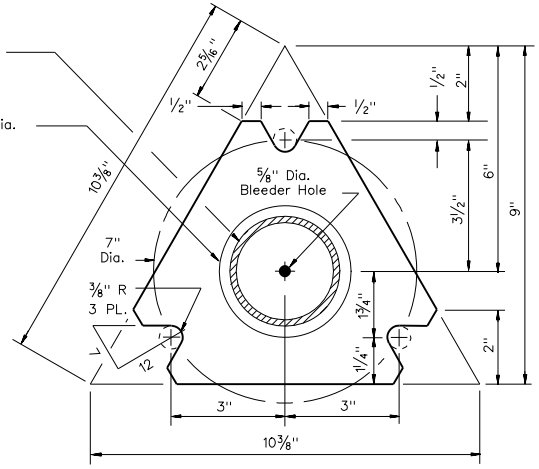

PLAN VIEW
TOP/BOTTOM PLATE
Plate Thickness = 5/8"

n = A Typical Manufacturer's Identification

Type 1 ASTM A449
5/8" x 3 1/8" Bolt

Type 1 ASTM A325
5/8" x 3 1/8" Bolt

TOP VIEW
BOLT DETAIL

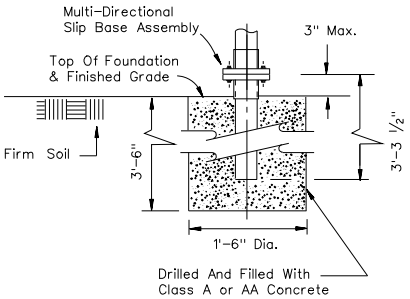

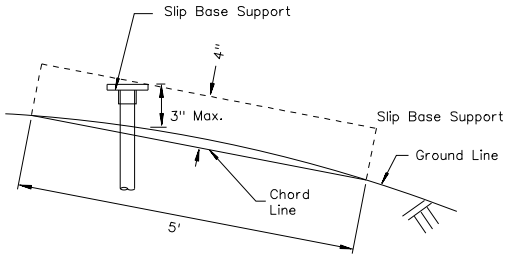

FOOTING DETAIL

NOTES:

1. ALL PARTS AND HARDWARE SHALL BE GALVANIZED AS PER SECTION 715 OF THE NEVADA DOT STANDARD SPECIFICATIONS, EXCEPT AS NOTED.
2. MULTI-DIRECTIONAL SLIP BASES ARE NOT REQUIRED BEHIND CONCRETE BARRIER RAIL OR BEHIND GUARDRAIL WHERE THE SIGN POST IS GREATER THAN 2'-6" FROM THE BACK SIDE OF THE GUARDRAIL POST.
3. USE STANDARD WEIGHT PIPE FOR SIGN POST AND SLEEVE. SEE ASTM A 53.
4. FOR DETAILS ON SIGN LOCATION, POST TYPE, PANEL BRACING, AND SIGN ISLANDS, SEE STANDARD PLAN T-31.1.1 THRU T-31.1.6.

NEVADA DEPARTMENT OF TRANSPORTATION

ROADSIDE SIGNS
ROUND METAL POSTS
MULTI-DIRECTIONAL
SLIP BASE

Signed Original On File	T-31.3.2	(627,715)
CHIEF SAFETY/TRAFFIC ENGR.	ADOPTED 7/96	REVISION 9/00

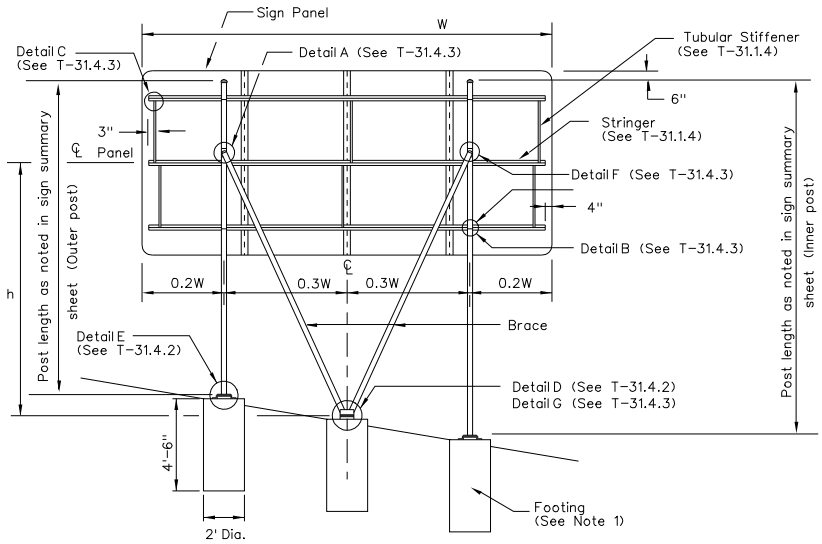

SINGLE SIGN

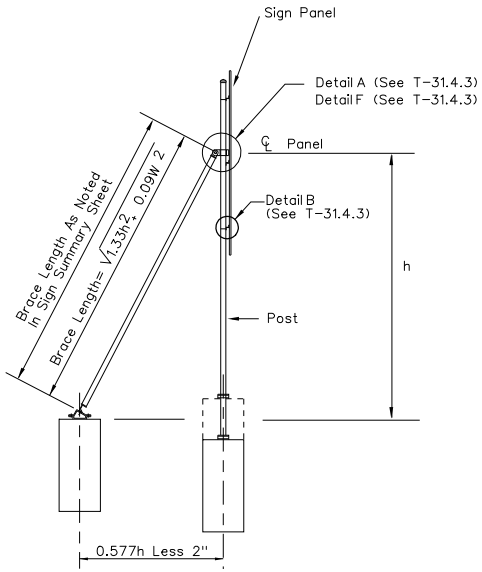

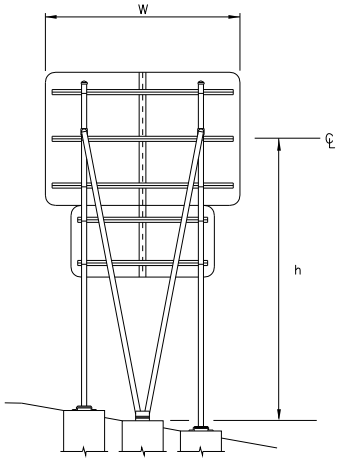

DOUBLE SIGN

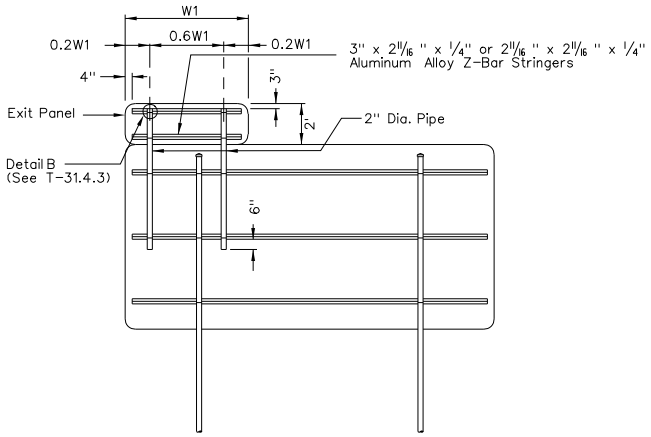

EXIT PANEL ATTACHMENT

NOTES:

1. FOOTINGS TO BE DRILLED HOLES AS SHOWN, & FILLED WITH CLASS A OR CLASS AA CONCRETE.
2. ANCHOR POST & BRACING INCLUDED IN COST OF SIGN POST.
3. FOR DETAILS ON SIGN LOCATION, POST TYPE, PANEL BRACING, AND SIGN ISLANDS, SEE STANDARD PLANS T-31.1.1 THRU T-31.1.6.
4. INNER POSTS ARE THOSE CLOSEST TO THE ROADWAY, AND THE OUTER POSTS ARE THOSE FARTHEST AWAY.

NEVADA DEPARTMENT OF TRANSPORTATION

ROADSIDE SIGNS
ROUND METAL POSTS
BRACED

Signed Original On File	T-31.4.1	(627)
CHIEF SAFETY/TRAFFIC ENGR.	ADOPTED 8/98	REVISION

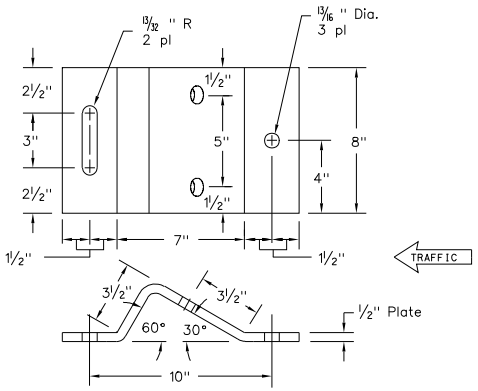

TOP PLATE

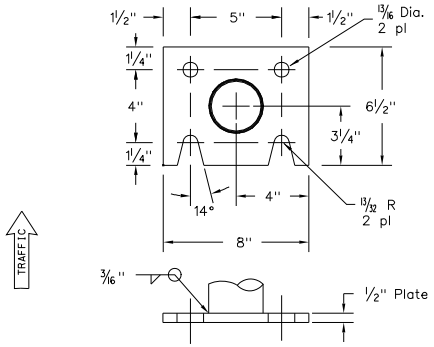

TOP PLATE

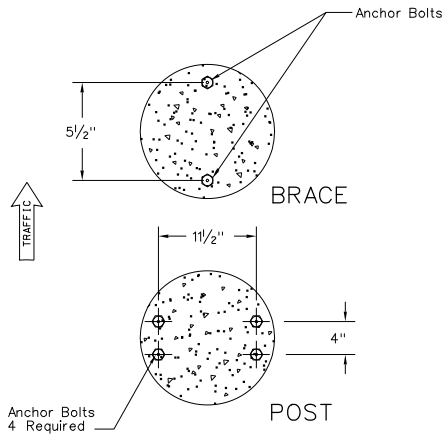

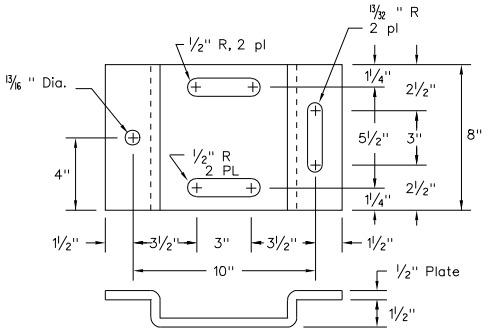

BOTTOM PLATE

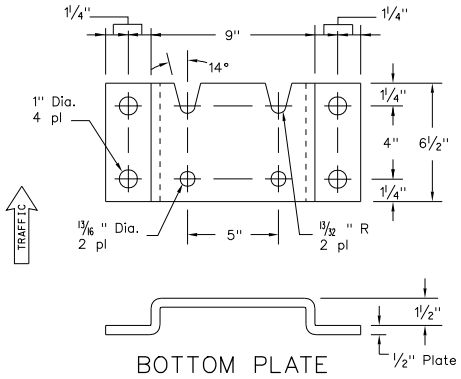

BOTTOM PLATE

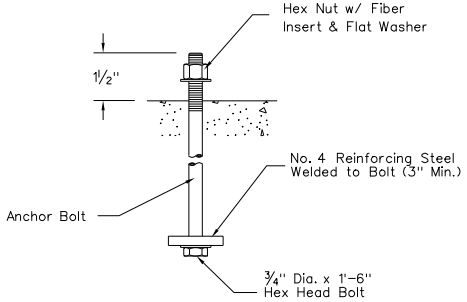

DETAIL H
ANCHOR BOLTS

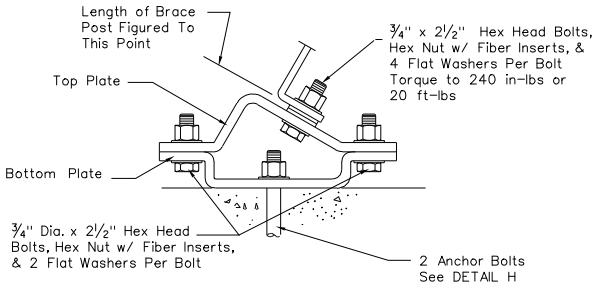

DETAIL D
BRACE

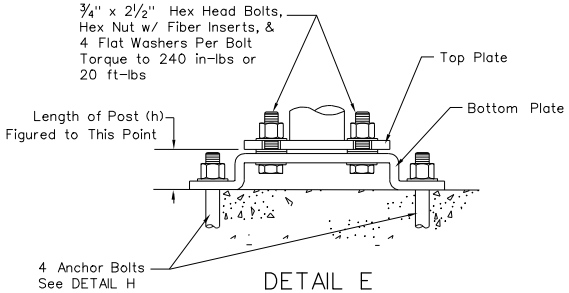

DETAIL E
POST

NOTES:

1. For Details On Sign Location, Post Type, Panel Bracing, and Sign Islands, See Standard Plans T-31.1.1 Thru T-31.1.6.

NEVADA DEPARTMENT OF TRANSPORTATION

ROADSIDE SIGNS
ROUND METAL POSTS
BRACED

Signed Original On File	T-31.4.2	(627)
CHIEF SAFETY/TRAFFIC ENGR.	ADOPTED 8/98	REVISION

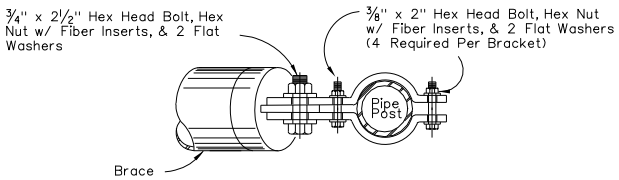

DETAIL A
CLAMP ASSEMBLY

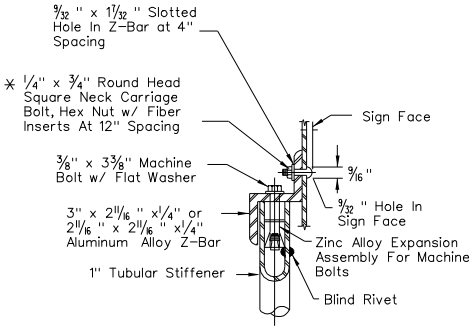

DETAIL C

POST Nom. Dia.	PR	PD	S
1"	29/32"	1 5/16"	1 9/16"
2"	1 13/16"	2 3/8"	2 5/8"
3"	1 3/4"	3 1/2"	3 3/4"

NOTES:

1. FOR DETAILS ON SIGN LOCATION, POST TYPE, PANEL BRACING, AND SIGN ISLANDS, SEE STANDARD PLAN DRAWINGS T-31.1.1 THRU T-31.1.6.

LEGEND:

* HEAD PRE-PAINTED WITH BAKED ENAMEL TO MATCH SIGN FACE.

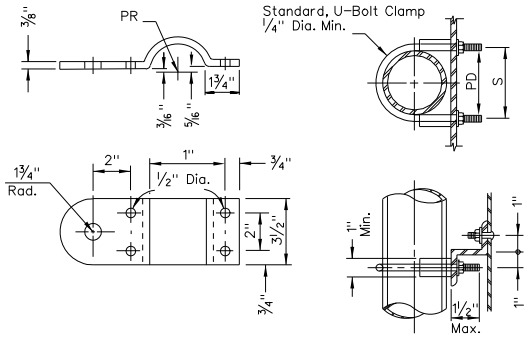

DETAIL B
CLAMP PLATE

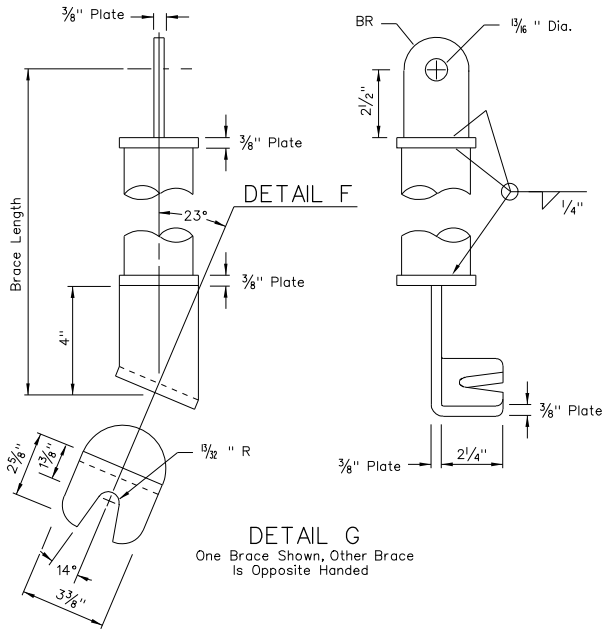

DETAIL G
One Brace Shown, Other Brace Is Opposite Handed

NEVADA DEPARTMENT OF TRANSPORTATION

ROADSIDE SIGNS
ROUND METAL POSTS
BRACED

Signed Original On File	T-31.4.3	(627)
CHIEF SAFETY/TRAFFIC ENGR.	ADOPTED 8/98	REVISION

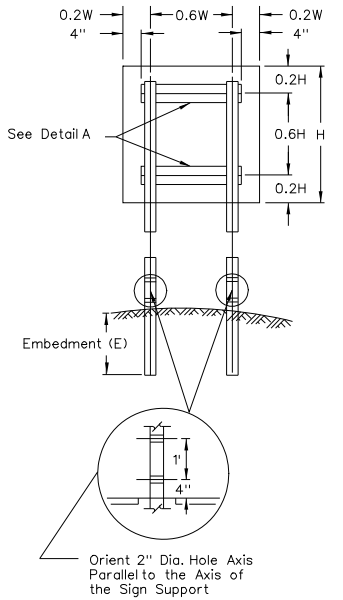

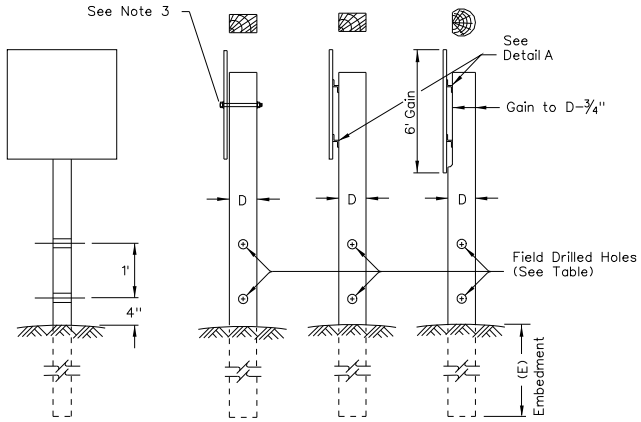

SIGN POST EMBEDMENTS	
4" x 4" = 3' 6" x 6" = 5'	4" x 6" = 4' 6" x 8" = 6'

RECTANGULAR TIMBER POST SELECTION

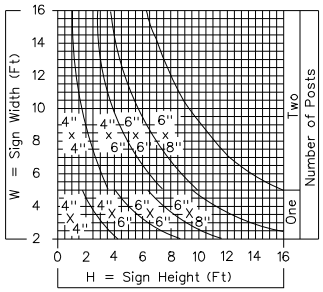

TABLE of HOLE DIAMETERS		
Post Size (D)	< 4" x 4" or 4" Dia.	> 4" x 4" or 4" Dia.
Hole Dia.	No Hole	2"

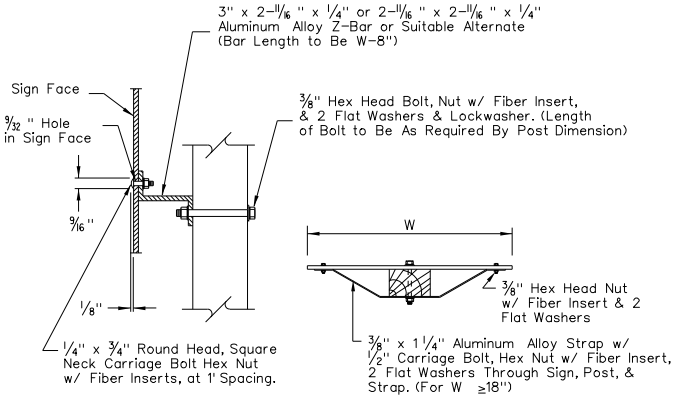

DETAIL A

NOTES:

1. ALL POSTS WITH CROSS SECTIONAL AREA LARGER THAN 4" x 4" ARE TO BE DRILLED AS SHOWN.
2. FOR DETAILS ON SIGN LOCATION, POST TYPE, PANEL BRACING, AND SIGN ISLANDS, SEE STANDARD PLANS T-31.1.1 THRU T-31.1.6.
3. Z-BARS WILL BE USED ON ALL SIGNS REQUIRING TWO POSTS.
4. FOR DOUBLE POST INSTALLATIONS, INNER POSTS ARE THOSE CLOSEST TO ROADWAY, AND OUTER POSTS ARE THOSE FARTHEST AWAY.

NEVADA DEPARTMENT OF TRANSPORTATION

ROADSIDE SIGNS
TIMBER
GENERAL

Signed Original On File	T-31.5.1	(627)
CHIEF SAFETY/TRAFFIC ENGR.	ADOPTED 8/98	REVISION 12/04

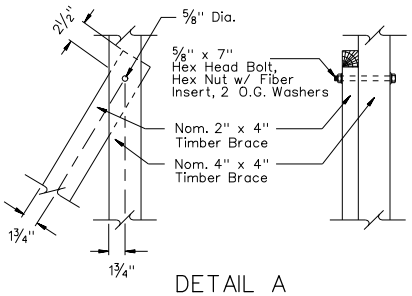

DETAIL A

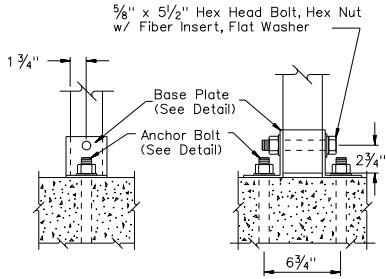

DETAIL C

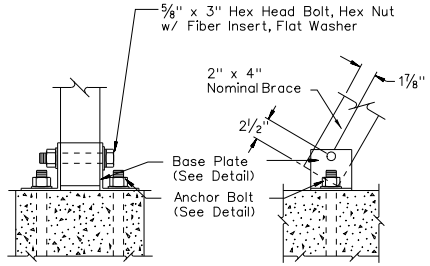

DETAIL D

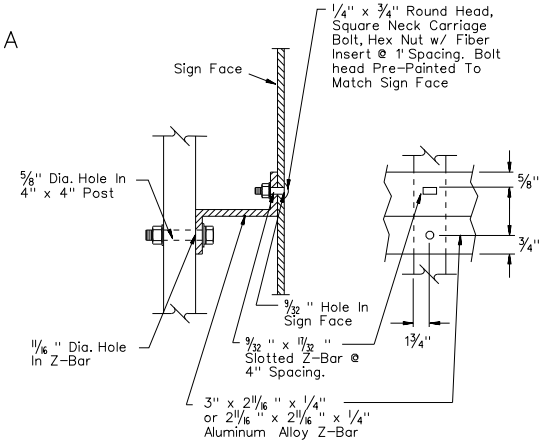

DETAIL B

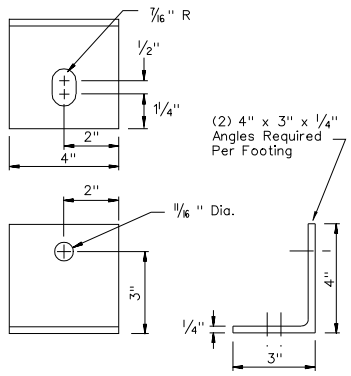

BASE PLATE DETAIL

NOTES:

1. ALL DRILLED HOLES IN TIMBER TO BE 5/8" DIAMETER UNLESS OTHERWISE NOTED.
2. BACK BRACE HOLE IN 4" x 4" POST TO BE DRILLED AND FITTED IN FIELD. ALL OTHER HOLES MAY BE SHOP DRILLED IN STANDARD POSITION.
3. FOOTINGS TO BE DRILLED 1'-6" DIAMETER, 3'-6" DEEP, FILLED WITH CLASS A OR CLASS AA CONCRETE.
4. FOR DETAILS ON SIGN LOCATION, POST TYPE, PANEL BRACING, AND SIGN ISLANDS, SEE STANDARD PLANS T-31.1.1 THRU T-31.1.6.

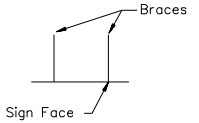

PLAN

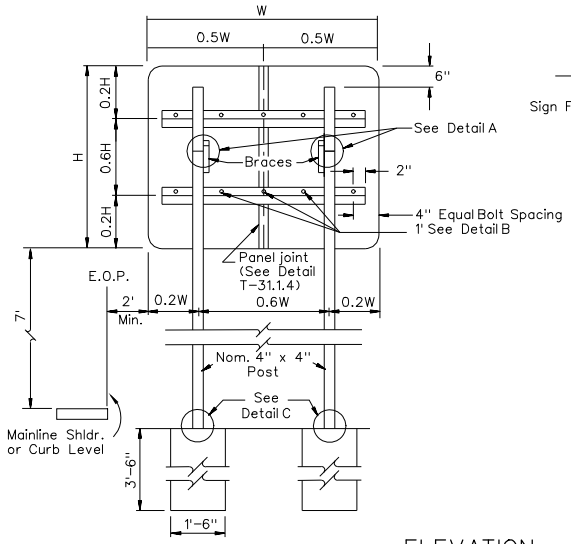

ELEVATION

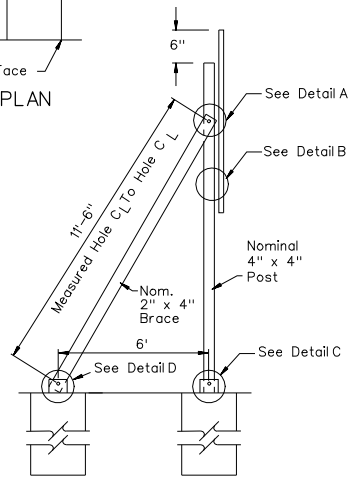

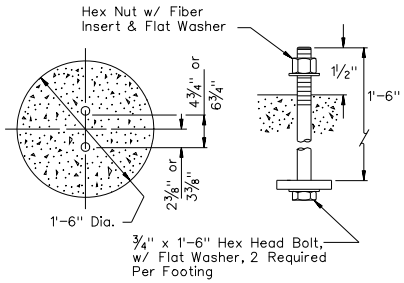

ANCHOR BOLTS DETAIL

NEVADA DEPARTMENT OF TRANSPORTATION

ROADSIDE SIGNS
TIMBER GORE SIGNS

Signed Original On File	T-31.5.2.	(627)
CHIEF SAFETY/TRAFFIC ENGR.	ADOPTED 8/98	REVISION

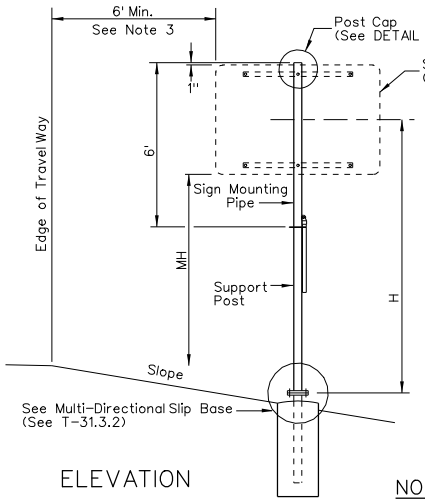

ELEVATION

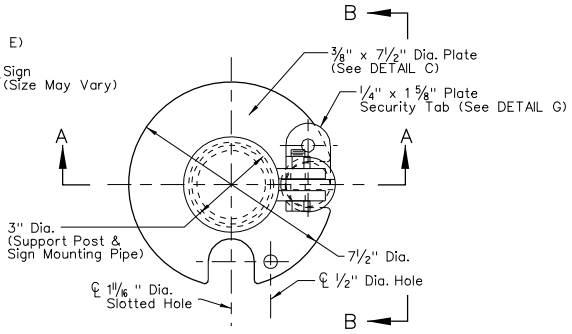

PLAN

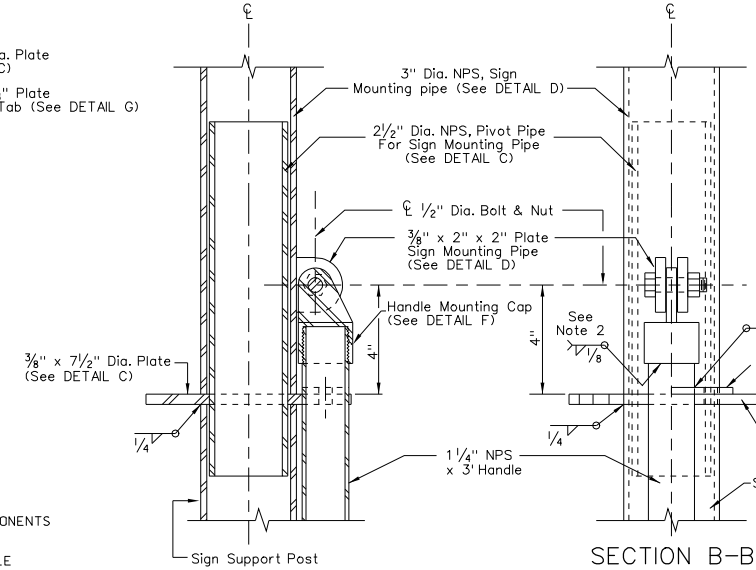

SECTION A-A

SECTION B-B

NOTES:

1. WELD IN FIELD OR AFTER PRE-ASSEMBLY OF OTHER COMPONENTS IN SHOP.
2. TACK WELD AT 1" INCREMENTS, AFTER 1/2" DIAMETER HOLE ALIGNMENT, OF SECURITY TAB AND PIVOT BASE PLATE.
3. FOR DETAILS ON SIGN LOCATION, POST TYPE, PANEL BRACING, AND SIGN ISLANDS, SEE STANDARD PLANS T-31.1.1 THRU T-31.1.6.
4. NPS = NOMINAL PIPE SIZE

LEGEND:

✱ DUE TO THE DIFFERENCE IN MANUFACTURER'S TOLERANCES THESE DIMENSIONS, MAY HAVE TO BE ADJUSTED.

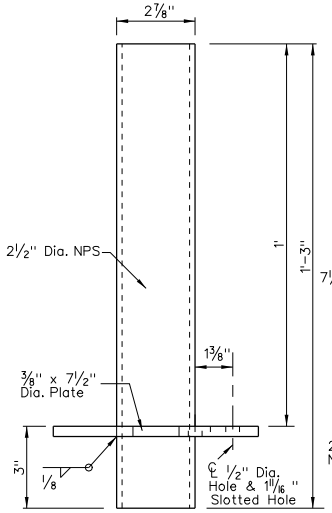

DETAIL C
(PIVOT PIPE & BASE PLATE)

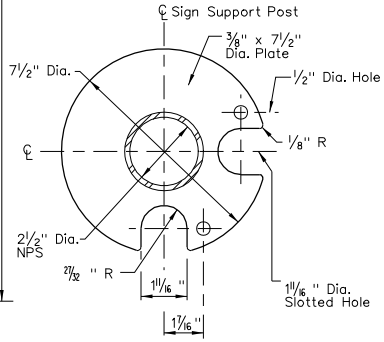

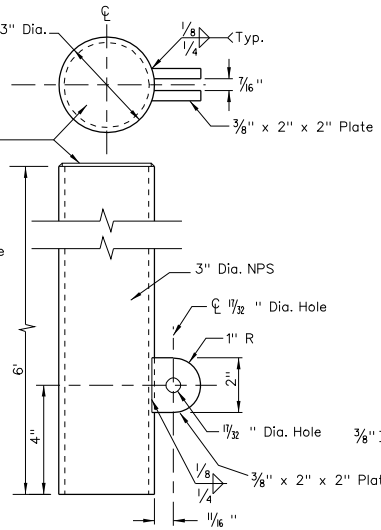

DETAIL D

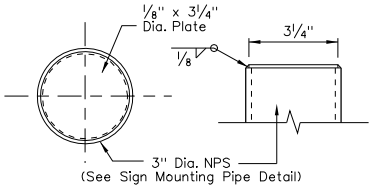

DETAIL E

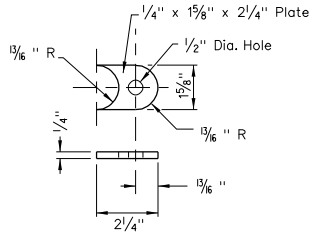

DETAIL G

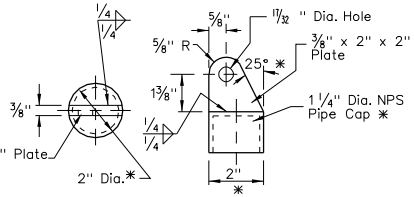

DETAIL F
HANDLE MOUNTING CAP

NEVADA DEPARTMENT OF TRANSPORTATION

ROADSIDE SIGNS
SPECIAL PIVOT POST

Signed Original On File	T-31.6.1	(627)
CHIEF SAFETY/TRAFFIC ENGR.	ADOPTED 8/98	REVISION

1 ADVANCE WARNING SIGN SPACING

SPEED (mph)	DISTANCE BETWEEN SIGNS (ft)		
	A	B	C
0-20	200	200	200
25-30	300	300	300
35-40	400	400	400
45-50	600	600	600
55-75	1000	1600	2640

2 TAPER LENGTH AND CHANNELIZING DEVICE SPACING

SPEED (mph)	LENGTH FOR MERGING TAPER (L) LANE WIDTH			TAPER & CHANNELIZATION DEVICE SPACING (ft)
	10.0ft	11.0ft	12.0ft	
20	80	80	80	20
25	125	125	125	25
30	150	180	180	30
35	210	245	245	35
40	280	320	320	40
45	450	495	540	45
50	500	550	600	50
55	550	605	660	55 *
60	600	660	720	60 *
65	650	715	780	65 *
70	700	770	840	70 *
75	750	825	900	75 *

* ON RURAL INTERSTATE HIGHWAYS WHERE THE SPEED LIMIT IS 55 MPH OR GREATER, THE CHANNELIZATION DEVICE SPACING (EXCEPT FOR TAPERS) MAY BE INCREASED TO 80 FEET. WHEN INCREASED DEVICE SPACING IS USED, 3 DRUMS WILL BE PLACED DIAGONALLY AT 0.5 MILE INCREMENTS TO INDICATE THE LANE IS CLOSED.

3 BUFFER LENGTH

SPEED (mph)	LENGTH (ft)
20	115
25	155
30	200
35	250
40	305
45	360
50	425
55	495
60	570
65	645
70	730
75	820

4

SHIFTING TAPER = 1/2 L
SHOULDER TAPER = 1/3 L

$\leq$ 40 mph $\quad L = \frac{WS^2}{60}$

$\geq$ 45 mph $\quad L = WS$

S = Speed(mph)

L = Taper Length(ft)

W = Width of Lateral Shift(ft)

TYPICAL APPLICATIONS:

NDOT STANDARD SHEETS T-35.1.2 THRU T-35.1.17 INCLUDE A VARIETY OF TRAFFIC CONTROL METHODS, BUT DO NOT INCLUDE A LAYOUT FOR EVERY CONCEIVABLE WORK SITUATION, TYPICAL APPLICATIONS SHOULD BE ALTERED WHEN NECESSARY TO FIT THE CONDITIONS OF A PARTICULAR TEMPORARY TRAFFIC CONTROL ZONE. FOR ADDITIONAL INFORMATION REFER TO THE LATEST EDITION OF THE MANUAL ON UNIFORM TRAFFIC CONTROL DEVICES (MUTCD) AND REVISIONS.

ADVANCE WARNING ARROW PANEL

TYPE	MINIMUM SIZE (INCHES)	POSTED SPEED
A	48 X 24	30 MPH OR LESS
B	60 X 30	35 MPH TO 50 MPH
C	96 X 48	55 MPH OR MORE

GENERAL NOTES:

1. R2-1 AND W3-5A MAY BE USED TO REDUCE EXISTING SPEED LIMIT TO 55 mph IF EXISTING SPEED LIMIT IS 65 mph THRU 75 mph, OTHER SPEED REDUCTIONS MUST BE APPROVED BY THE DIRECTOR.
2. THE W1-3 SIGNS SHALL BE USED WHEN THE RECOMMENDED SPEED ON A CURVE IS 30 mph OR LESS, THE W1-4 SIGNS SHALL BE USED WHEN THE RECOMMENDED SPEED IS 35 mph OR GREATER.
3. THE W6-3 AND R4-1 SIGNS SHALL BE INSTALLED ALTERNATELY AT 0.5 MILE INTERVALS WHEN THE LENGTHS OF CROSSOVERS EXCEED 0.5 MILE.
4. ALL REGULATORY SIGNS (R SERIES) SHALL BE BLACK ON RETROREFLECTIVE WHITE.
5. ALL WARNING SIGNS (W SERIES) SHALL BE BLACK ON RETROREFLECTIVE ORANGE.
6. WARNING SIGNS SHALL BE A MINIMUM OF 3' x 3' FOR SPEEDS OF 45 mph OR LESS, R2-1 SHALL BE 3' x 4'.
7. WARNING SIGNS SHALL BE A MINIMUM OF 4' x 4' FOR SPEEDS OF 50 mph OR GREATER, R2-1 SHALL BE 4' x 5'.

NEVADA DEPARTMENT OF TRANSPORTATION

TYPICAL TABLES/NOTES FOR TRAFFIC CONTROL SHEETS T-35.1.1 thru T-35.1.17

Signed Original On File	T-35.1.1	(625)
CHIEF SAFETY/TRAFFIC ENGR.	ADOPTED 9/00	REVISION 10/09

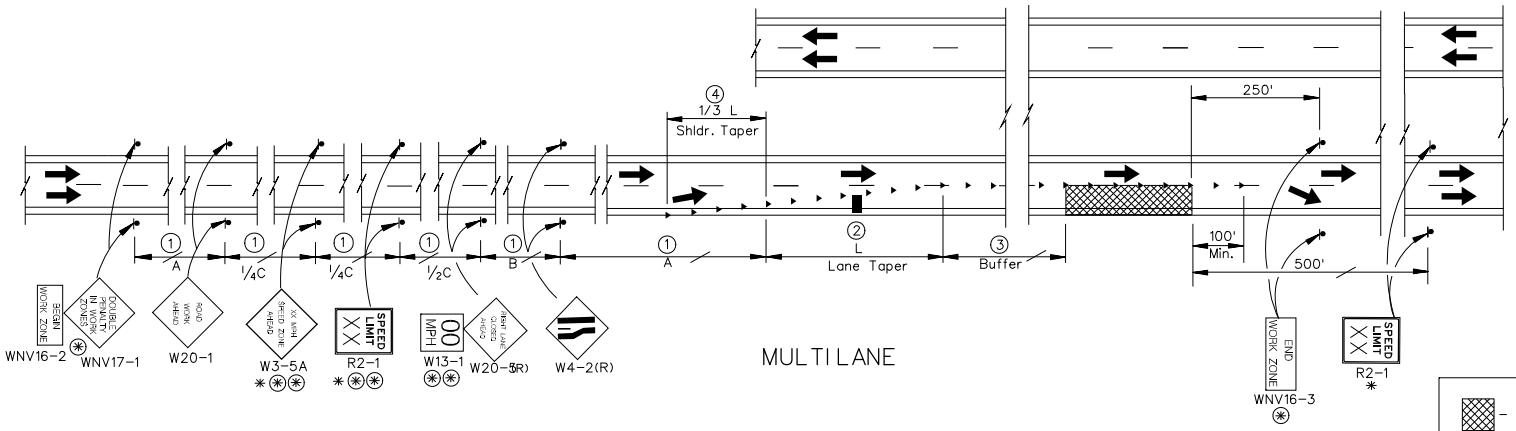

MULTI LANE

LEGEND:

- WORK AREA
- CHANNELIZING DEVICES
- ARROW BOARD
- ✱ - ≥ 45 MPH
- ✱✱ - OPTIONAL
- ✱ - SEE GENERAL NOTE NO. 1 ON T-35.1.1
- FLAGGER LOCATIONS TO BE DETERMINED BY THE FIELD ENGINEER.

See T-35.1.1 For TABLES and GENERAL NOTES

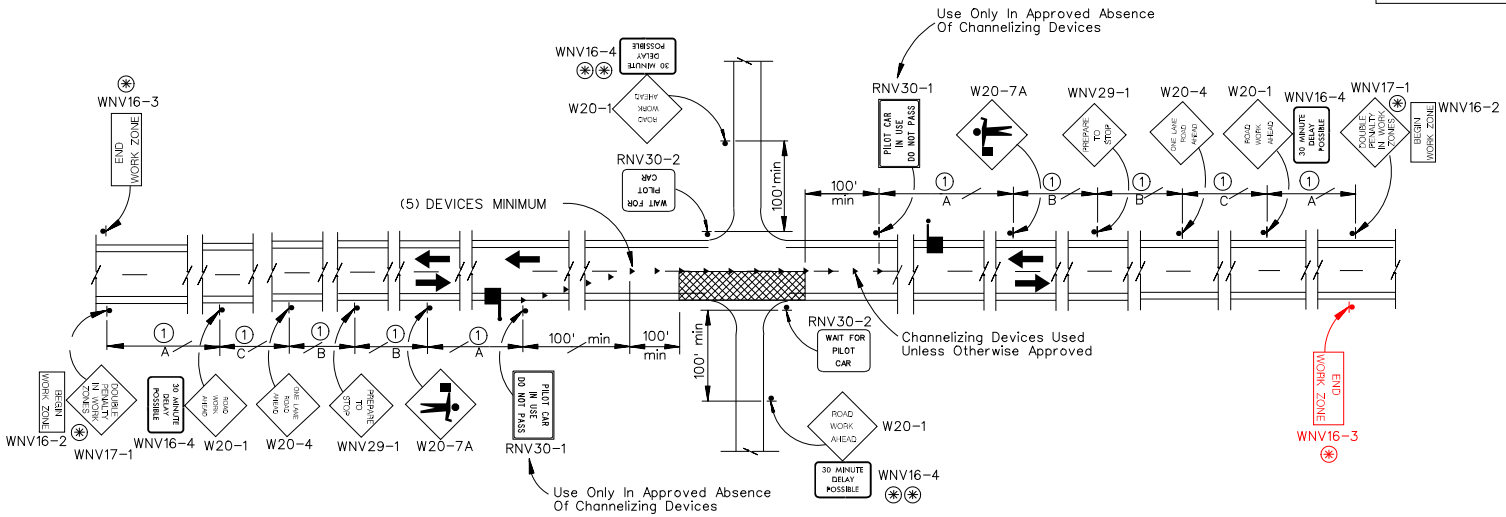

TWO LANE –TWO WAY

NEVADA DEPARTMENT OF TRANSPORTATION

TYPICAL TRAFFIC CONTROL FOR ONE LANE CLOSURES

Signed Original On File	T-35.1.2	(625)	
CHIEF SAFETY/TRAFFIC ENGR.	ADOPTED 7/96	REVISION 5/09	

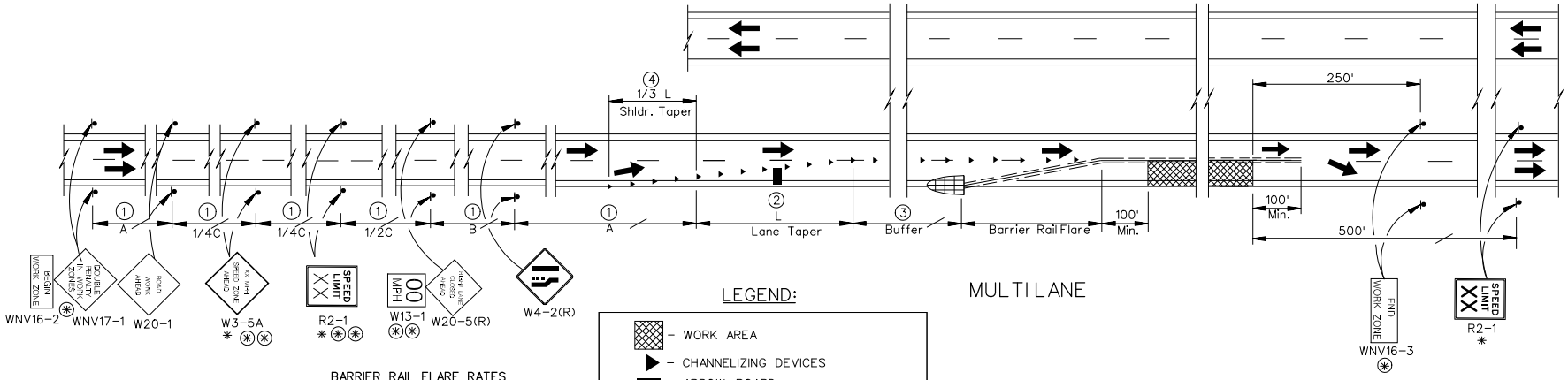

MULTI LANE

LEGEND:

- WORK AREA
- CHANNELIZING DEVICES
- ARROW BOARD
- ≥ 45 MPH
- OPTIONAL
- SEE GENERAL NOTE NO. 1.
- FLAGGER LOCATIONS TO BE DETERMINED BY THE FIELD ENGINEER.
- TEMPORARY IMPACT ATTENUATOR
- TEMPORARY BARRIER RAIL

See T-35.1.1 For TABLES and GENERAL NOTES

BARRIER RAIL FLARE RATES

DESIGN SPEED	FLARE RATE
75 mph	22:1
70 mph	20:1
60 mph	18:1
55 mph	16:1
50 mph	14:1
45 mph	12:1
40 mph	10:1
30 mph	8:1

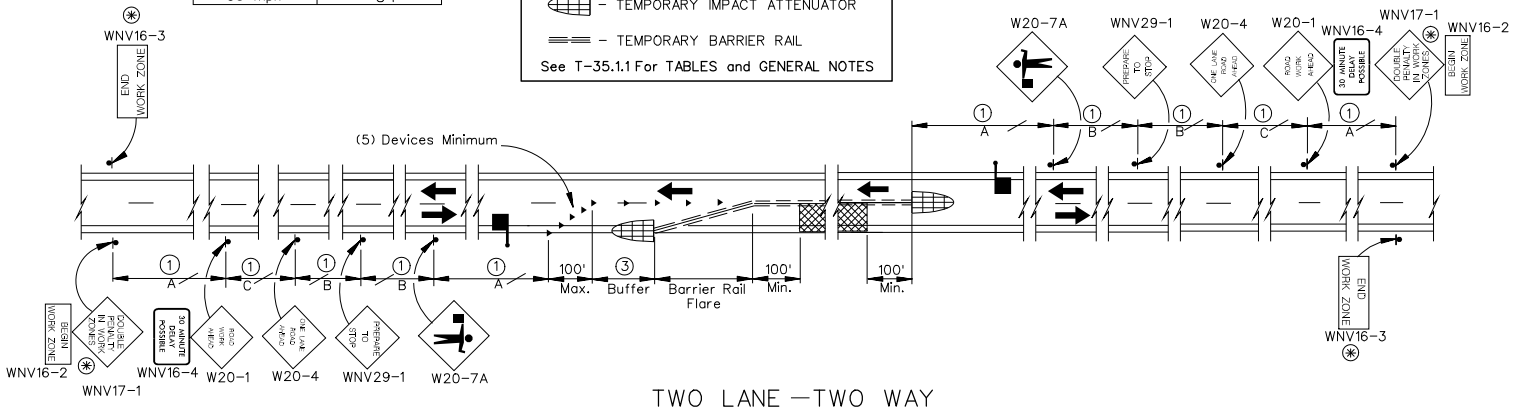

TWO LANE —TWO WAY

NEVADA DEPARTMENT OF TRANSPORTATION

TYPICAL TRAFFIC CONTROL FOR PORTABLE PRECAST CONCRETE BARRIER RAIL CLOSURES

Signed Original On File	T-35.1.3	(625)
CHIEF SAFETY/TRAFFIC ENGR.	ADOPTED 7/96	REVISION 5/09

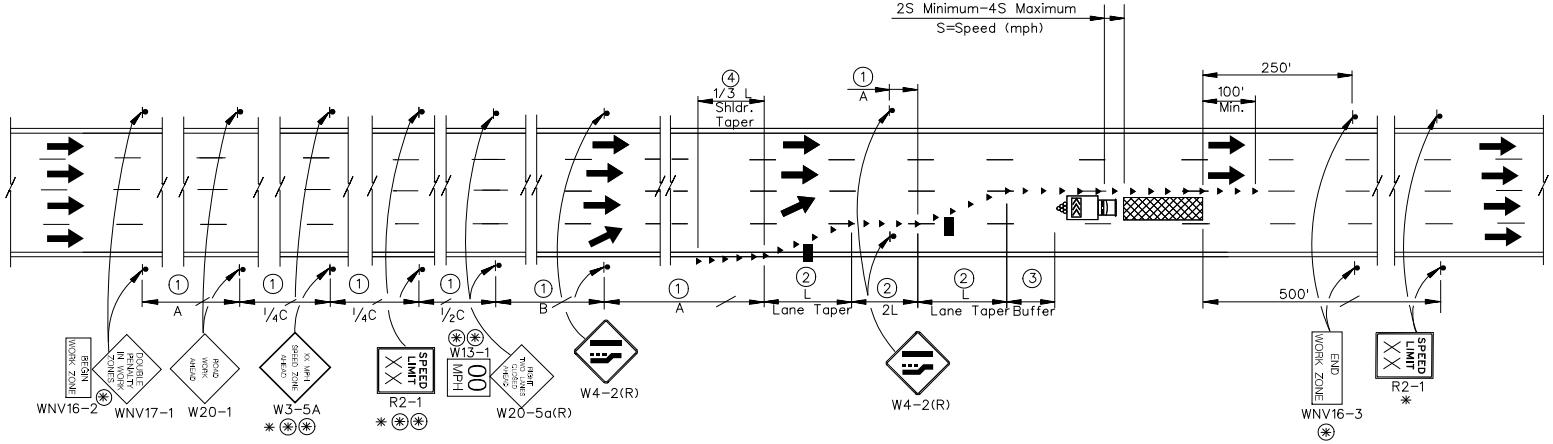

LEGEND:

- WORK AREA
- CHANNELIZING DEVICES
- ARROW BOARD
- ≥ 45 MPH
- OPTIONAL
- SEE GENERAL NOTE NO. 1.
- TRUCK MOUNTED ATTENUATOR (OPTIONAL)

See T-35.1.1 For TABLES and GENERAL NOTES

NEVADA DEPARTMENT OF TRANSPORTATION

TYPICAL TRAFFIC CONTROL FOR MULTILANE CLOSURE

Signed Original On File	T-35.1.4		(625)
CHIEF SAFETY/TRAFFIC ENGR.	ADOPTED 7/96	REVISION 6/06	

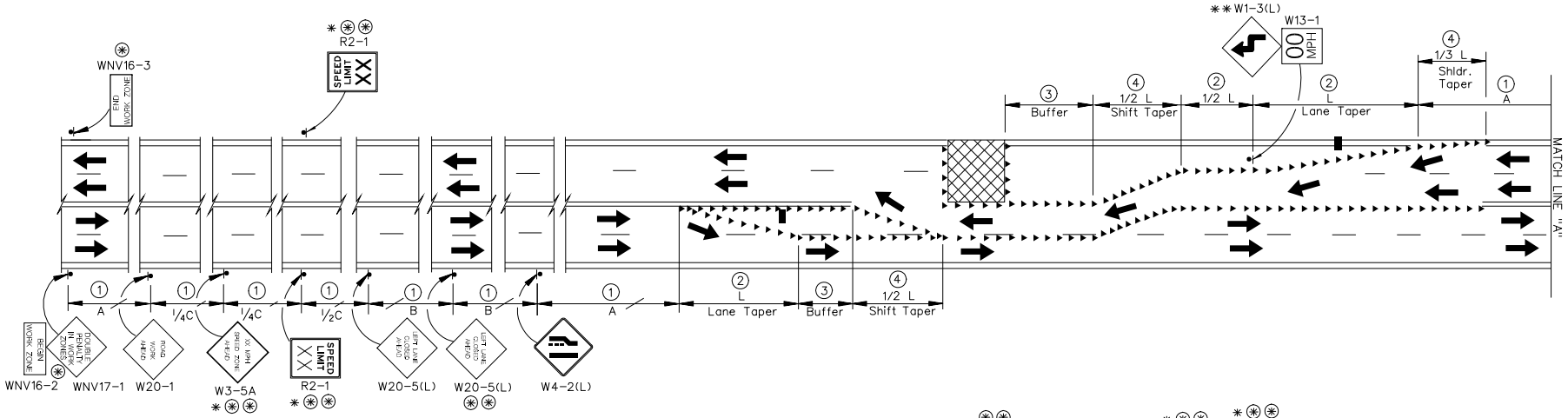

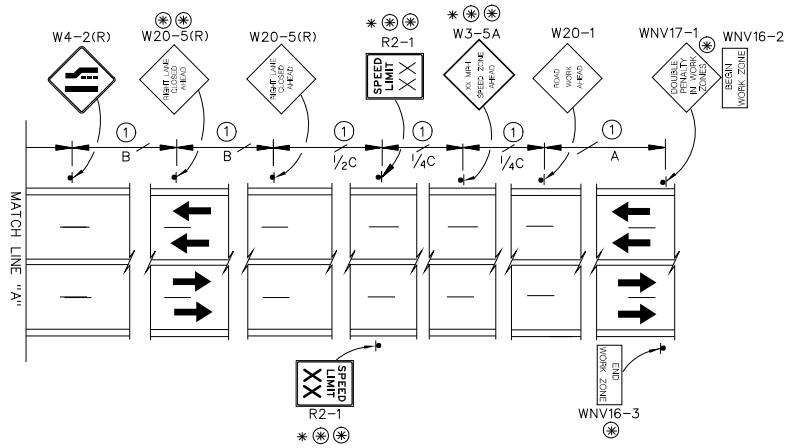

LEGEND:

- WORK AREA
- CHANNELIZING DEVICES
- ARROW BOARD
- (✱) - ≥ 45 MPH
- (✱)(✱) - OPTIONAL
- ✱ - SEE GENERAL NOTE NO. 1.
- ✱✱ - SEE GENERAL NOTE NO. 2.

See T-35.1.1 For TABLES and GENERAL NOTES

NEVADA DEPARTMENT OF TRANSPORTATION

TYPICAL TRAFFIC CONTROL FOR HALF ROAD CLOSURE (MULTILANE UNDIVIDED)

Signed Original On File	T-35.1.5		(625)
CHIEF SAFETY/TRAFFIC ENGR.	ADOPTED 5/79	REVISION 6/06	

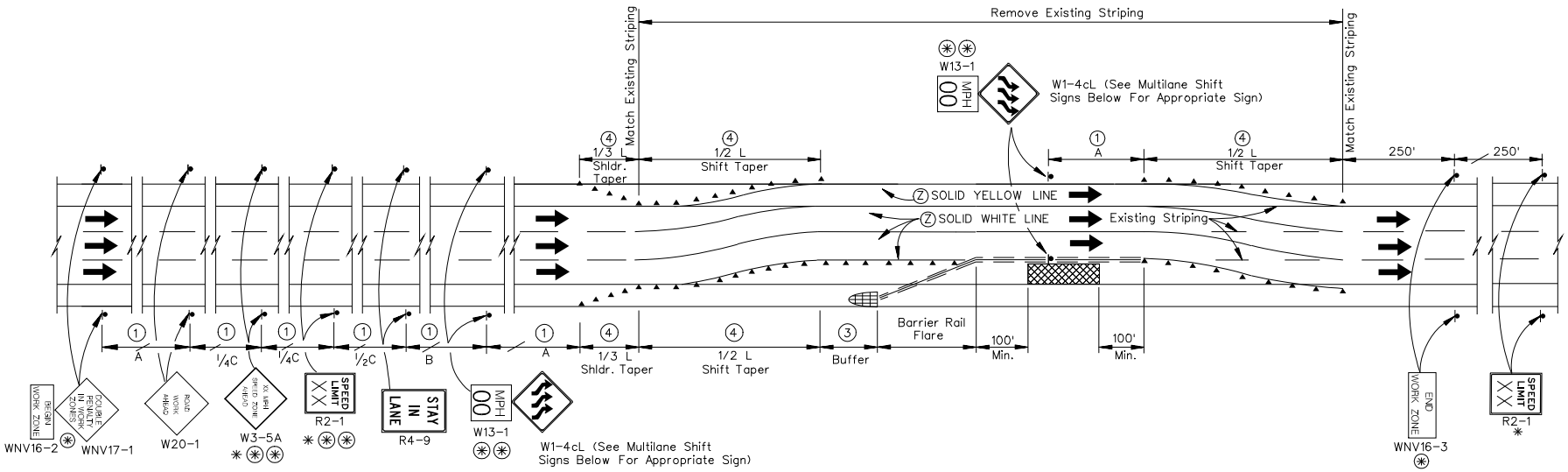

MULTILANE SHIFT SIGNS

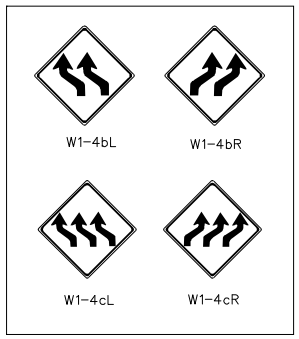

LEGEND:

- WORK AREA
- CHANNELIZING DEVICES
- ✱ - ≥ 45 MPH
- ✱✱ - OPTIONAL
- ✱ - SEE GENERAL NOTE NO. 1.
- Ⓩ - TEMPORARY STRIPING
- TEMPORARY IMPACT ATTENUATOR
- ==== - TEMPORARY BARRIER RAIL

See T-35.1.1 For TABLES and GENERAL NOTES

BARRIER RAIL FLARE RATES

DESIGN SPEED	FLARE RATE
75 mph	22:1
70 mph	20:1
60 mph	18:1
55 mph	16:1
50 mph	14:1
45 mph	12:1
40 mph	10:1
30 mph	8:1

NEVADA DEPARTMENT OF TRANSPORTATION

TYPICAL TRAFFIC CONTROL FOR MULTILANE SHIFT

Signed Original On File	T-35.1.6		(625)
CHIEF SAFETY/TRAFFIC ENGR.	ADOPTED 3/02	REVISION 6/06	

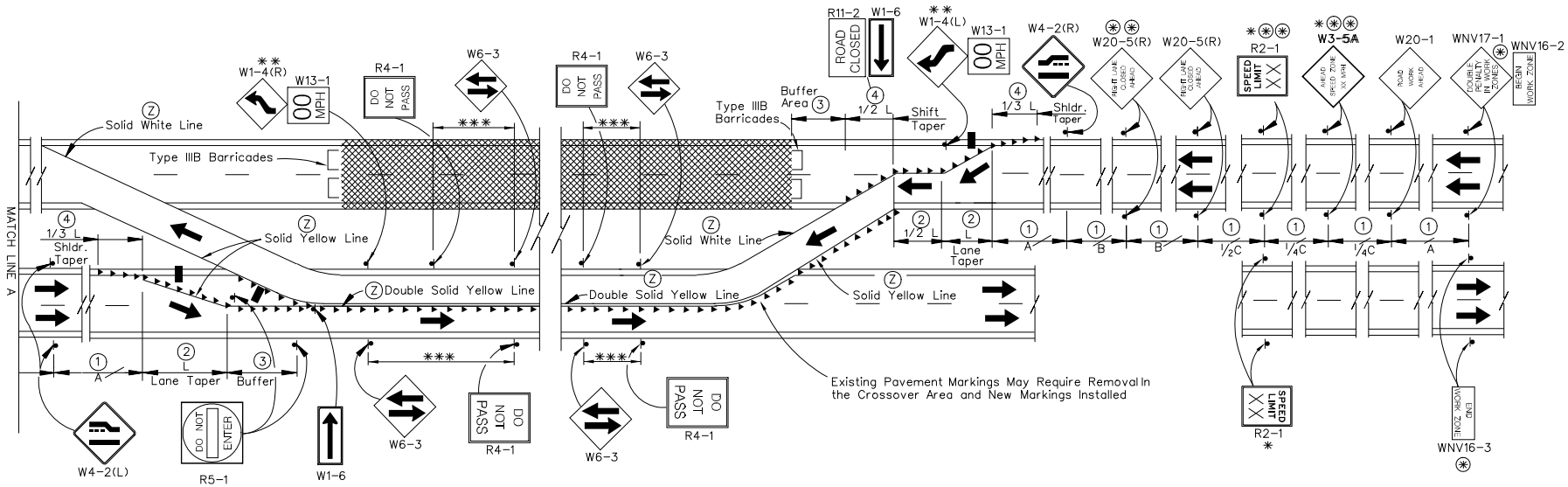

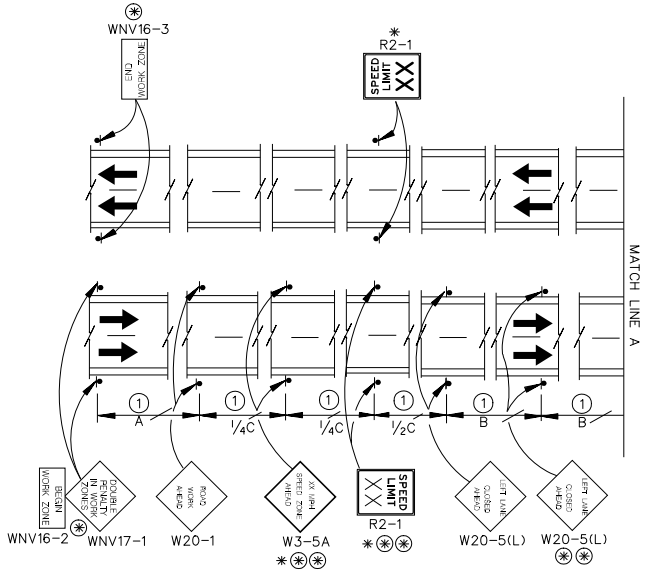

LEGEND:

- WORK AREA
- CHANNELIZING DEVICES
- ARROW BOARD
- ✱ - ≥ 45 MPH
- ✱✱ - OPTIONAL
- ✱ - SEE GENERAL NOTE NO. 1.
- ✱✱ - SEE GENERAL NOTE NO. 2.
- ✱✱✱ - SEE GENERAL NOTE NO. 3.
- Ⓩ - TEMPORARY STRIPING

See T-35.1.1 For TABLES and GENERAL NOTES

NEVADA DEPARTMENT OF TRANSPORTATION

TYPICAL TRAFFIC CONTROL FOR MEDIAN CROSSOVER (MULTILANE DIVIDED)

Signed Original On File	T-35.1.7		(625)
CHIEF SAFETY/TRAFFIC ENGR.	ADOPTED 7/96	REVISION 6/06	

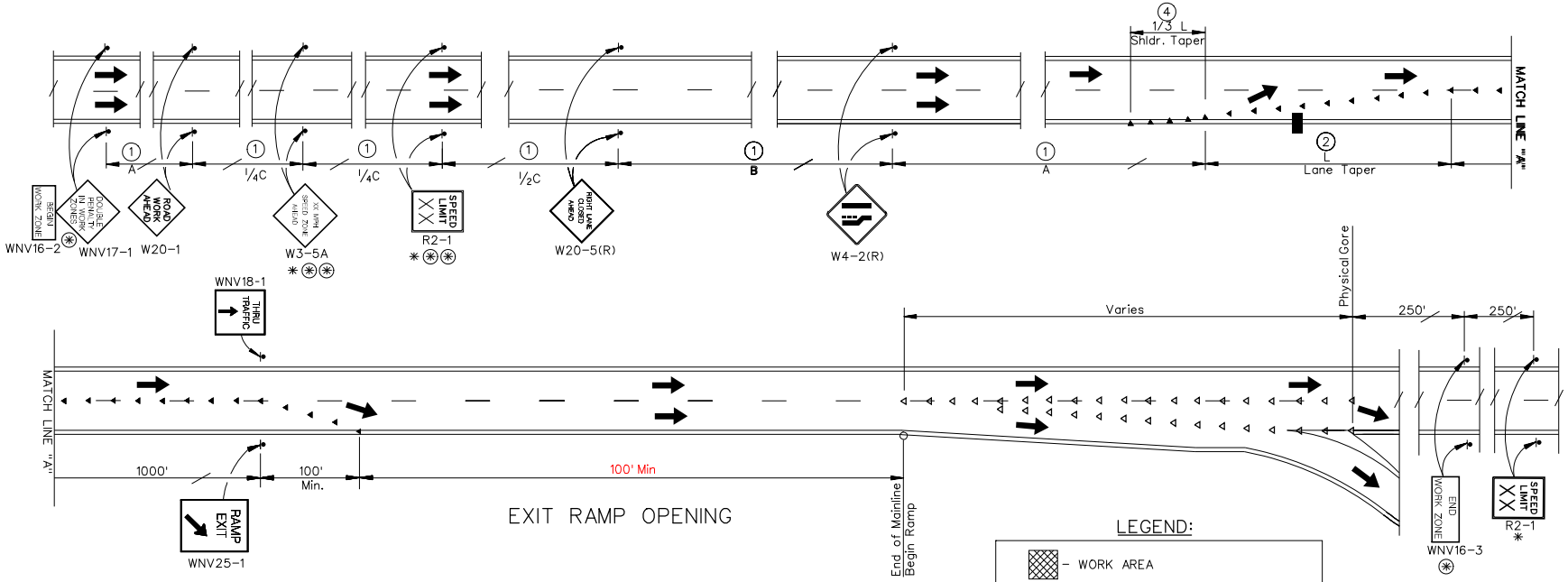

LEGEND:

- WORK AREA
- CHANNELIZING DEVICES (SEE TABLE)
- CHANNELIZING DEVICES (33' SPACING)
- ARROW BOARD
- ≥ 45 MPH
- SEE GENERAL NOTE NO. 1.
- TRUCK MOUNTED ATTENUATOR (OPTIONAL). SEE STANDARD SHEET T-35.1.4 FOR SPACING.

See T-35.1.1 For TABLES and GENERAL NOTES

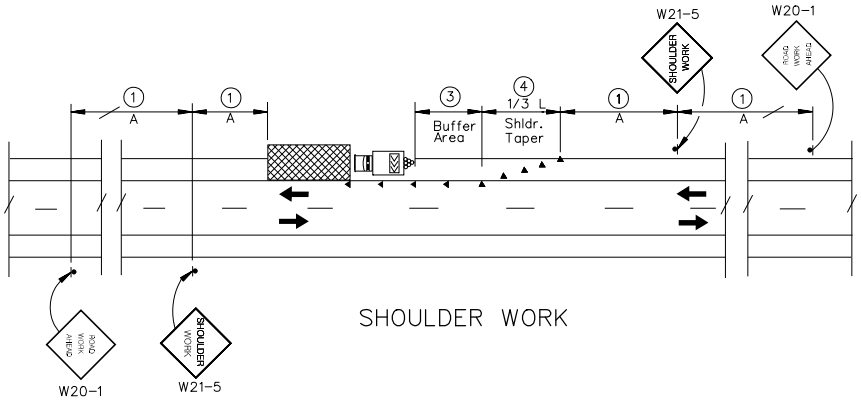

SHOULDER WORK

NEVADA DEPARTMENT OF TRANSPORTATION

TYPICAL TRAFFIC CONTROL FOR EXIT RAMP & SHOULDER WORK

Signed Original On File	T-35.1.9	(625)
CHIEF SAFETY/TRAFFIC ENGR.	ADOPTED 7/96	REVISION 5/09

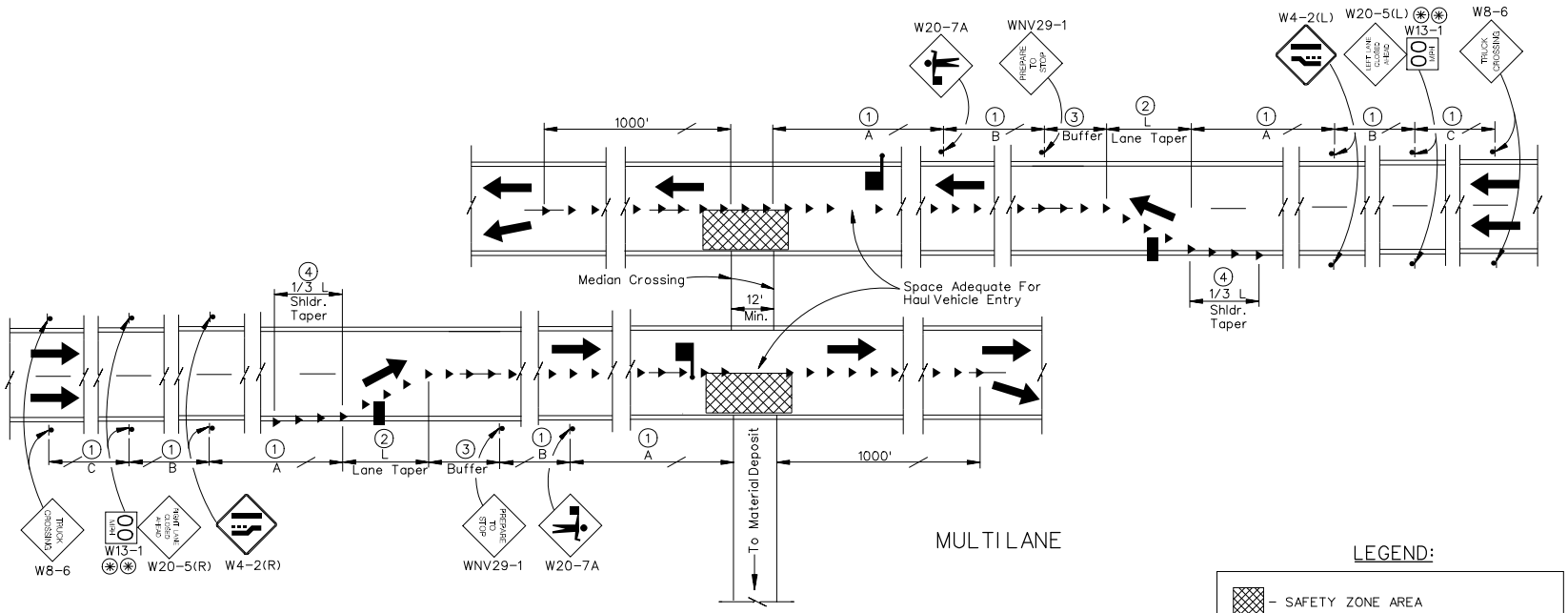

MULTI LANE

LEGEND:

- SAFETY ZONE AREA
- CHANNELIZING DEVICES
- ARROW BOARD
- OPTIONAL
- FLAGGER LOCATIONS TO BE DETERMINED BY THE FIELD ENGINEER

See T-35.1.1 For TABLES and GENERAL NOTES

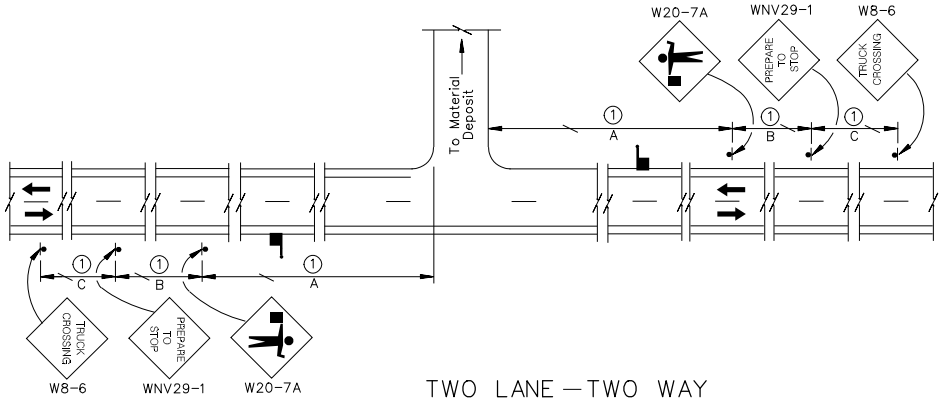

TWO LANE — TWO WAY

NEVADA DEPARTMENT OF TRANSPORTATION

TYPICAL TRAFFIC CONTROL FOR HAUL ROAD

Signed Original On File	T-35.1.10		(625)
CHIEF SAFETY/TRAFFIC ENGR.	ADOPTED 7/96	REVISION 6/06	

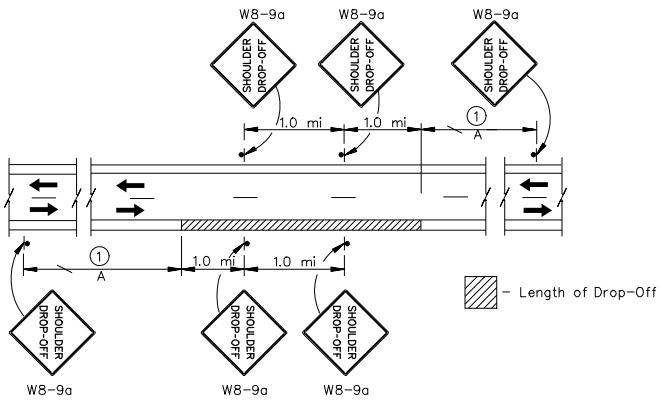

TYPICAL PLACEMENT OF SHOULDER DROP OFF SIGNS
(PLACED WHEN SHOULDER DROP-OFF EXIST
DURING NON-WORKING HOURS)

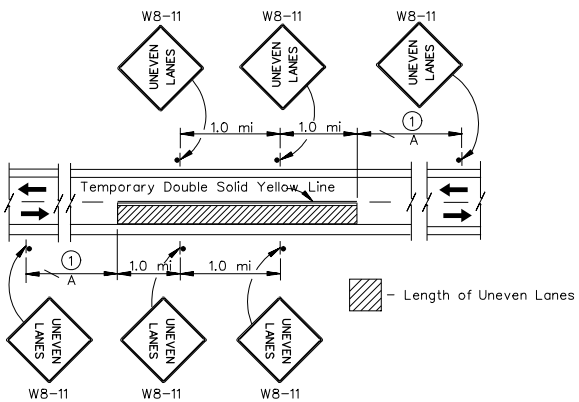

TYPICAL PLACEMENT OF UNEVEN LANES SIGNS
(PLACED WHEN UNEVEN LANES EXIST
DURING NON-WORKING HOURS)

LEGEND:

(✳)(✳) - OPTIONAL
✳ - SEE GENERAL NOTE NO. 1.
See T-35.1.1 For TABLES and GENERAL NOTES

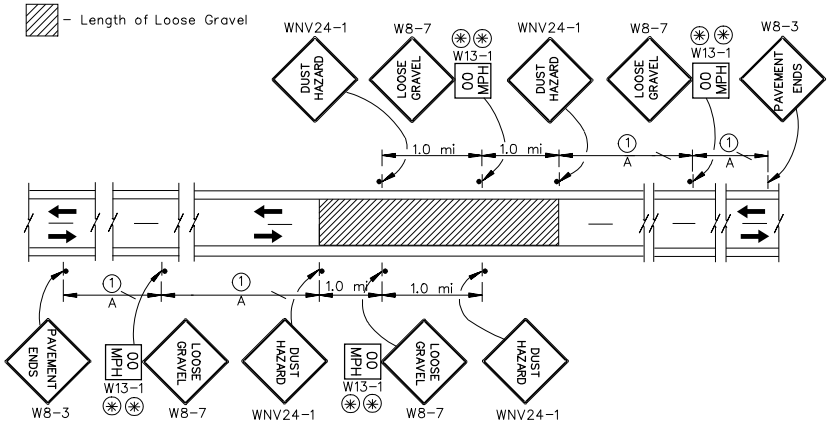

TYPICAL PLACEMENT OF LOOSE GRAVEL/DUST HAZARD SIGNS

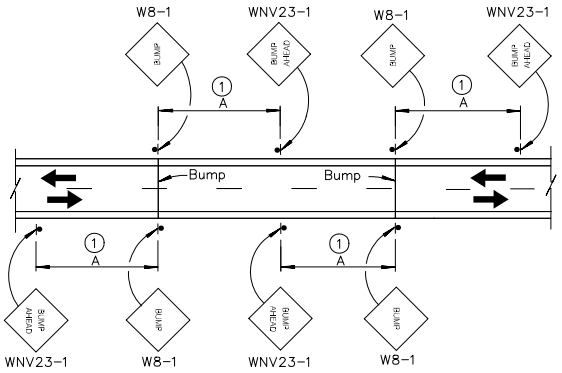

TYPICAL PLACEMENT OF BUMP SIGNS

NEVADA DEPARTMENT OF TRANSPORTATION

TYPICAL TRAFFIC CONTROL FOR SHLDR. DROP OFF/ UNEVEN LANES/DUST HAZARD /LOOSE GRAVEL & BUMP

Signed Original On File	T-35.1.11	(625)
CHIEF SAFETY/TRAFFIC ENGR.	ADOPTED 7/96	REVISION 6/06

LEGEND:

- WORK ZONE
- CHANNELIZING DEVICES @ 6.0 ft SPACING
- CHANNELIZING DEVICES
- FLAGGER (LOCATIONS TO BE DETERMINED BY THE FIELD ENGINEER)
- ARROW BOARD
- USE WHEN SPEEDS ARE ≤ 45mph
- LOCATION TO BE DETERMINED BY FIELD ENGINEER

NOTE – REMOVE MEDIAN TRAFFIC CONTROL SIGNS ON A TWO LANE FACILITY.

See T-35.1.1 For TABLES and GENERAL NOTES

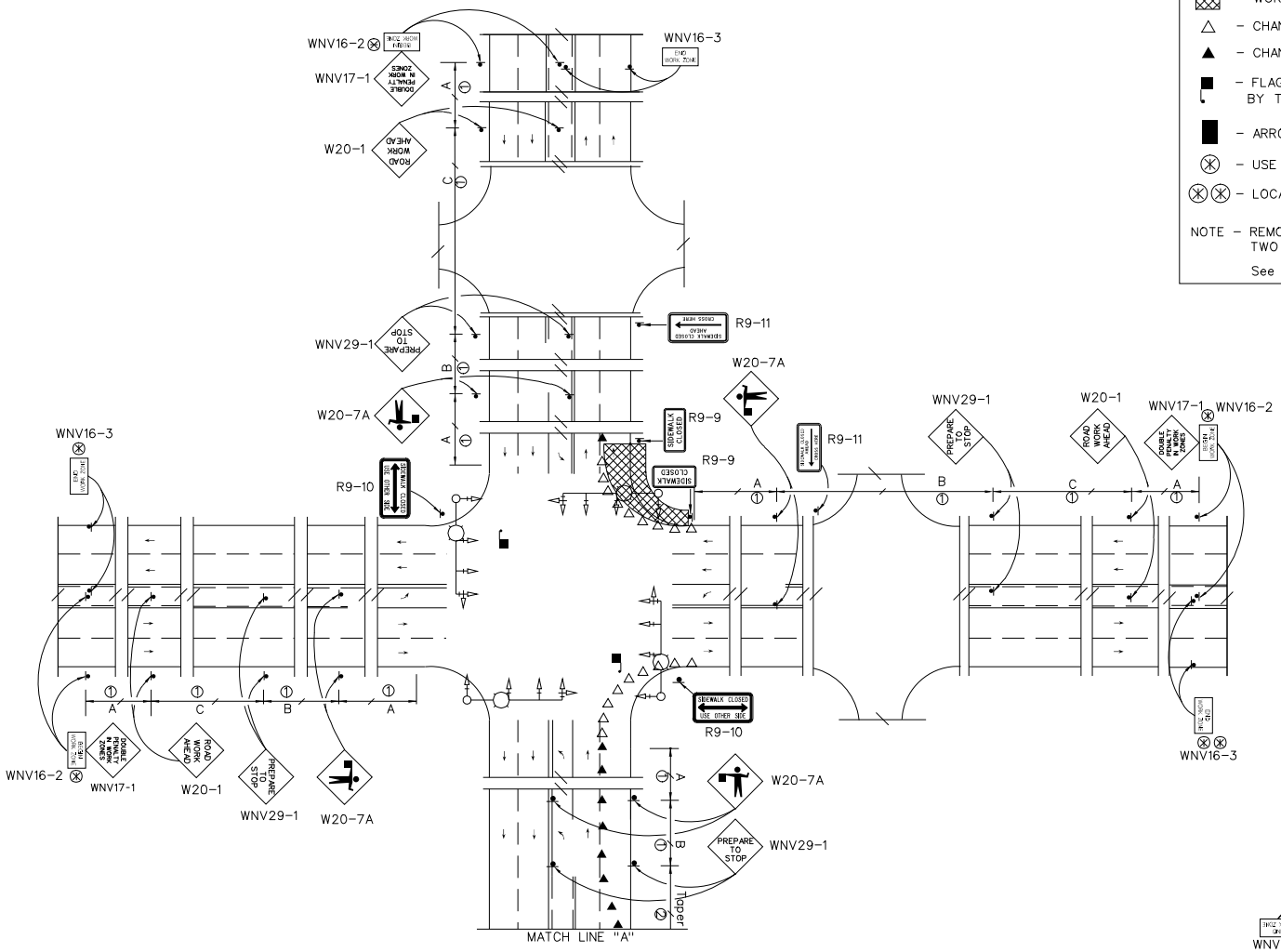

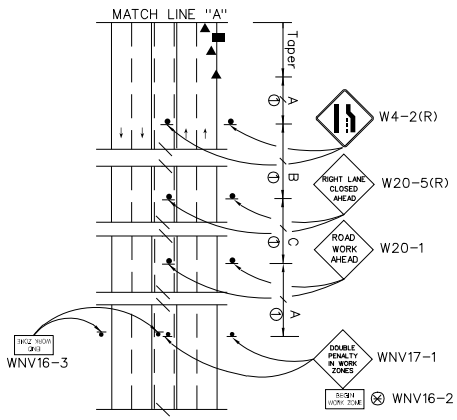

NEVADA DEPARTMENT OF TRANSPORTATION

TYPICAL TRAFFIC CONTROL INTERSECTION WORK ONLY (OUTSIDE LANE)

Signed Original On File	T-35.1.12	(625)
CHIEF SAFETY/TRAFFIC ENGR.	ADOPTED 10/02	REVISION 6/06

LEGEND:

- WORK ZONE
- CHANNELIZING DEVICES @ 6.0 ft SPACING
- CHANNELIZING DEVICES
- FLAGGER (LOCATIONS TO BE DETERMINED BY THE FIELD ENGINEER)
- USE WHEN SPEEDS ARE ℄ 45mph

NOTE – REMOVE MEDIAN TRAFFIC CONTROL SIGNS ON A TWO LANE FACILITY.

See T-35.1.1 For TABLES and GENERAL NOTES

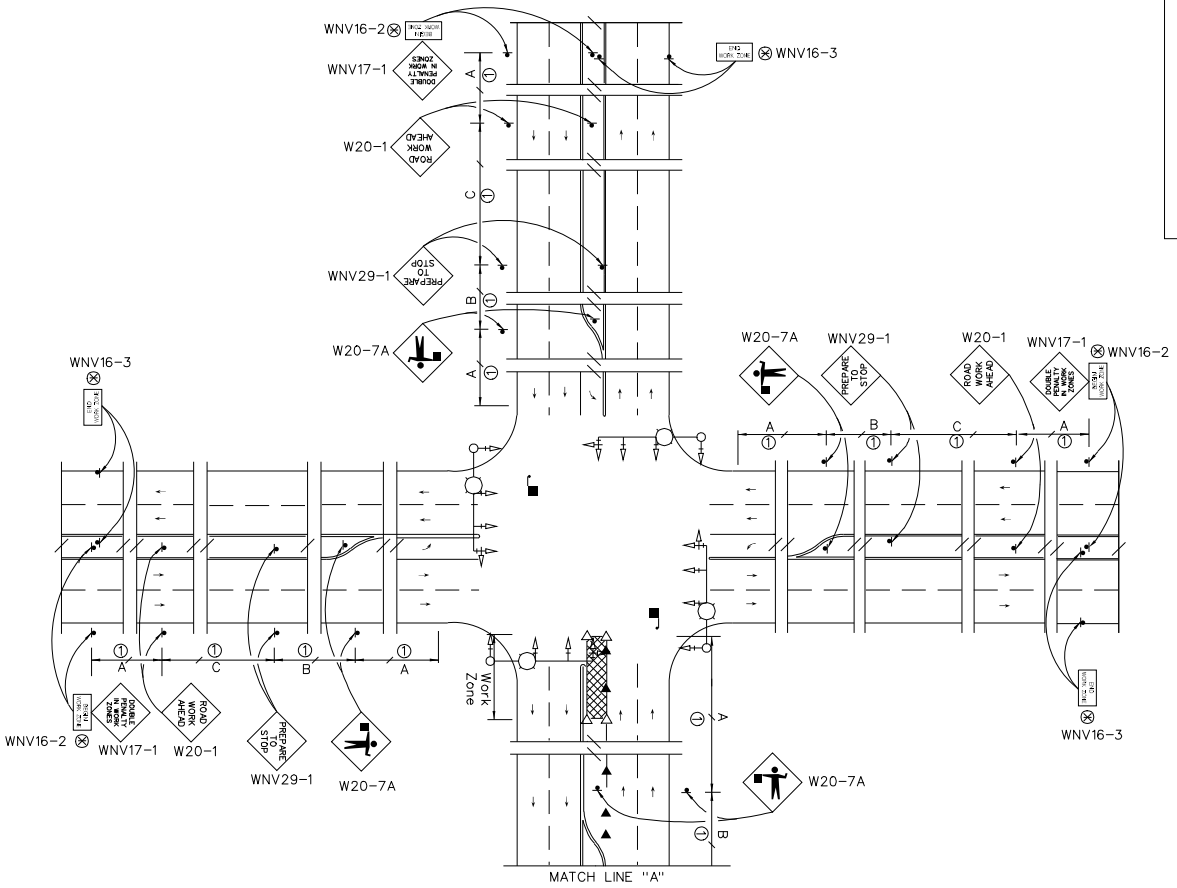

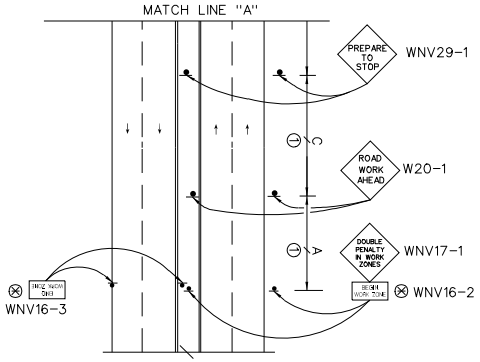

NEVADA DEPARTMENT OF TRANSPORTATION

TYPICAL TRAFFIC CONTROL INTERSECTION WORK ONLY (MEDIAN WITH ISLAND)

Signed Original On File	T-35.1.13		(625)
CHIEF SAFETY/TRAFFIC ENGR.	ADOPTED 10/02	REVISION 6/06	

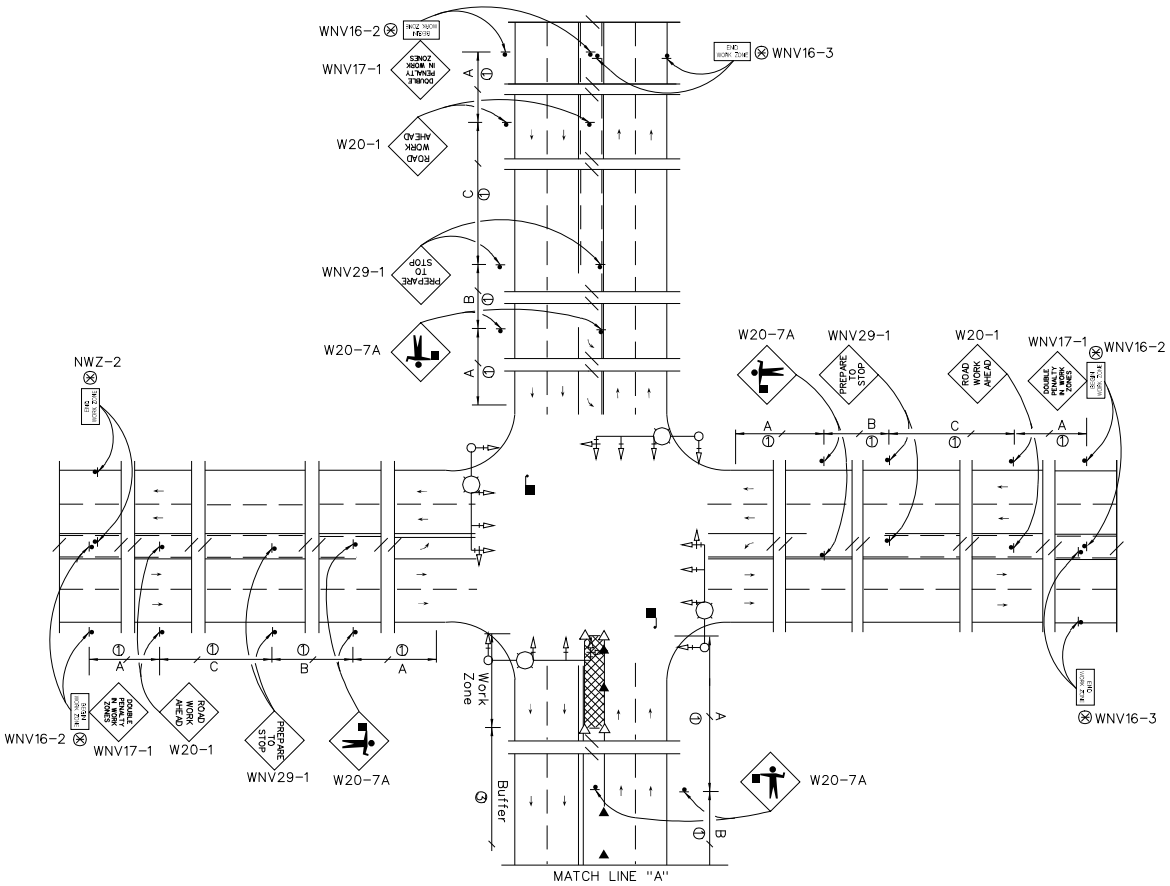

LEGEND:

- WORK ZONE
- CHANNELIZING DEVICES @ 6.0 ft SPACING
- CHANNELIZING DEVICES
- FLAGGER (LOCATIONS TO BE DETERMINED BY THE FIELD ENGINEER)
- ARROW BOARD
- USE WHEN SPEEDS ARE ≤ 45mph

NOTE – REMOVE MEDIAN TRAFFIC CONTROL SIGNS ON A TWO LANE FACILITY.

See T-35.1.1 For TABLES and GENERAL NOTES

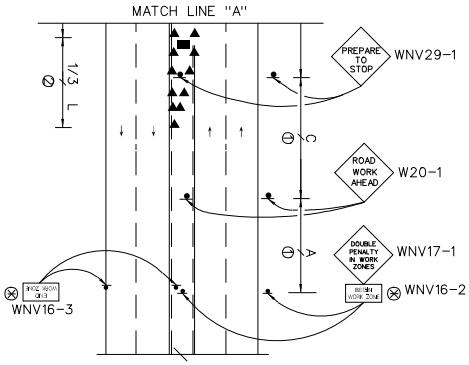

NEVADA DEPARTMENT OF TRANSPORTATION

TYPICAL TRAFFIC CONTROL INTERSECTION WORK ONLY (MEDIAN WITH NO ISLAND)

Signed Original On File	T-35.1.14	(625)
CHIEF SAFETY/TRAFFIC ENGR.	ADOPTED 10/02	REVISION 6/06

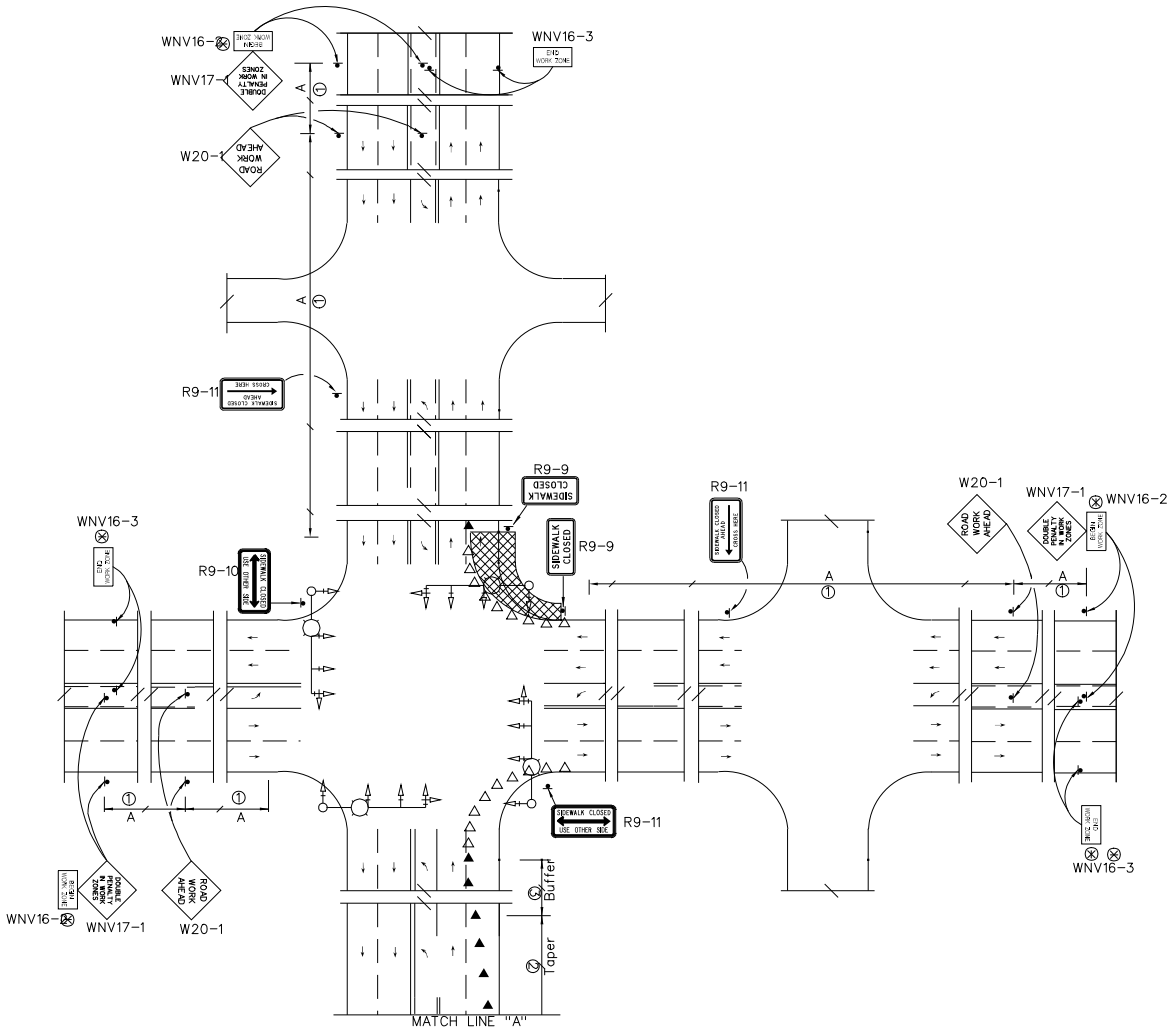

LEGEND:

- WORK ZONE
- △ – CHANNELIZING DEVICES @ 6.0 ft SPACING
- ▲ – CHANNELIZING DEVICES
- ■ – ARROW BOARD
- ⊗ – USE WHEN SPEEDS ARE ℄ 45mph
- ⊗⊗ – LOCATION TO BE DETERMINED BY FIELD ENGINEER

NOTE – REMOVE MEDIAN TRAFFIC CONTROL SIGNS ON A TWO LANE FACILITY.

See T-35.1.1 For TABLES and GENERAL NOTES

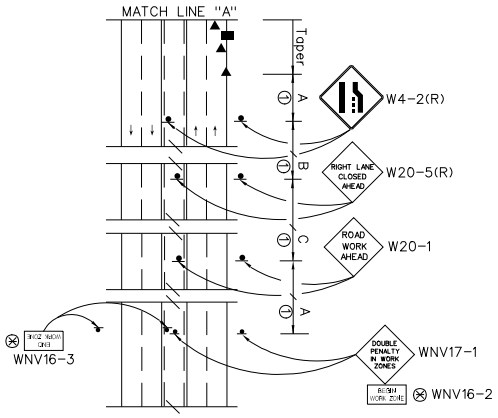

NEVADA DEPARTMENT OF TRANSPORTATION

TYPICAL TRAFFIC CONTROL INTERSECTION WORK ONLY NO FLAGGERS (OUTSIDE LANE)

Signed Original On File	T-35.1.15		(625)
CHIEF SAFETY/TRAFFIC ENGR.	ADOPTED 10/02	REVISION 6/06	

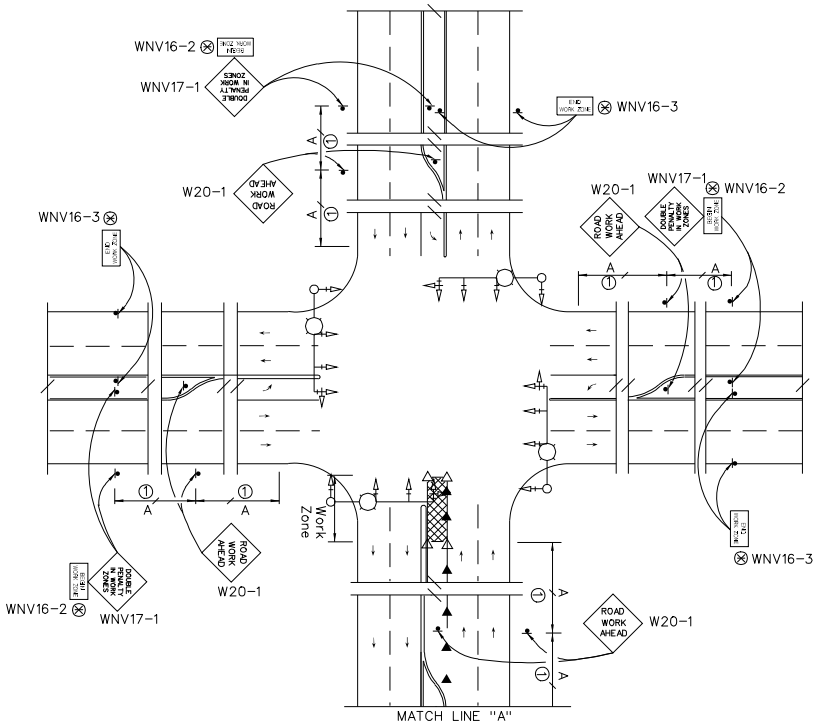

LEGEND:

- ▨ – WORK ZONE
- △ – CHANNELIZING DEVICES @ 6.0 ft SPACING
- ▲ – CHANNELIZING DEVICES
- ⊗ – USE WHEN SPEEDS ARE ℄ 45mph

NOTE – REMOVE MEDIAN TRAFFIC CONTROL SIGNS ON A TWO LANE FACILITY.

See T-35.1.1 For TABLES and GENERAL NOTES

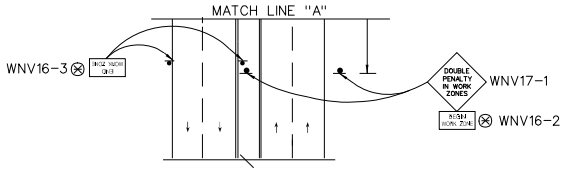

NEVADA DEPARTMENT OF TRANSPORTATION

TYPICAL TRAFFIC CONTROL INTERSECTION WORK ONLY NO FLAGGERS (MEDIAN WITH ISLAND)

Signed Original On File	T-35.1.16		(625)
CHIEF SAFETY/TRAFFIC ENGR.	ADOPTED 10/02	REVISION 6/06	

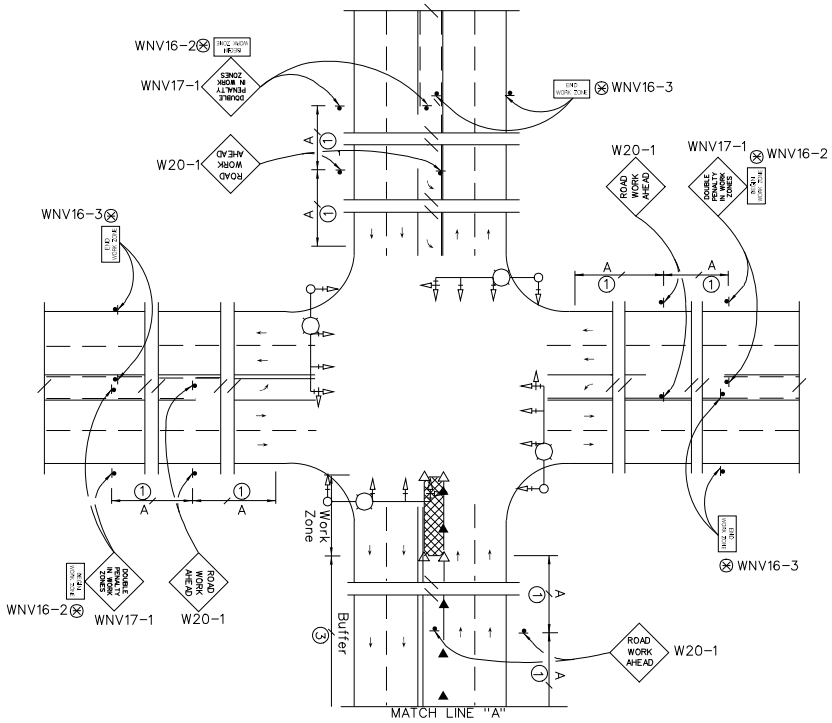

LEGEND:

- WORK ZONE
- △ – CHANNELIZING DEVICES @ 6.0 ft SPACING
- ▲ – CHANNELIZING DEVICES
- ■ – ARROW BOARD
- ⊗ – USE WHEN SPEEDS ARE ≤ 45mph

NOTE – REMOVE MEDIAN TRAFFIC CONTROL SIGNS ON A TWO LANE FACILITY.

See T-35.1.1 For TABLES and GENERAL NOTES

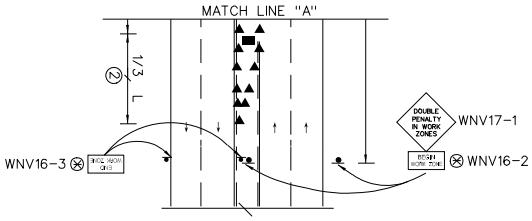

NEVADA DEPARTMENT OF TRANSPORTATION

TYPICAL TRAFFIC CONTROL INTERSECTION WORK ONLY NO FLAGGERS (MEDIAN WITH NO ISLAND)

Signed Original On File	T-35.1.17	(625)
CHIEF SAFETY/TRAFFIC ENGR.	ADOPTED 10/02	REVISION 6/06

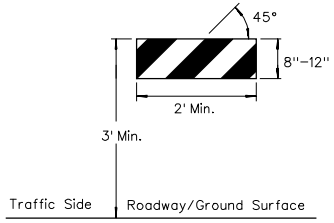

TYPE I BARRICADE

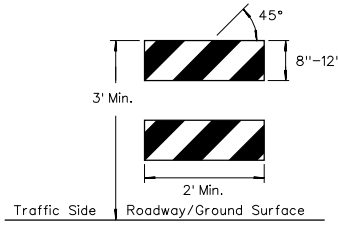

TYPE II BARRICADE

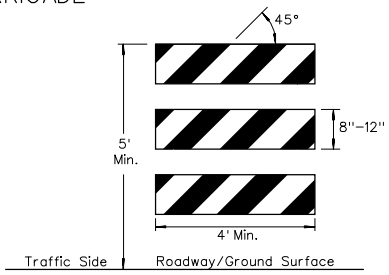

TYPE III B BARRICADE

See Note 2

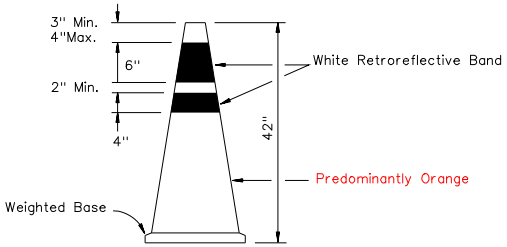

ORANGE TRAFFIC CONES

	TYPE I BARRICADE	TYPE II BARRICADE	TYPE IIIB BARRICADE
Width of Stripes	Rail Length< 3'= 4" Rail Length≥ 3'= 6"		6"
Number of Retroreflective Rail faces	2 (One Each Direction)	4 (Two Each Direction)	3 (One Direction Only)

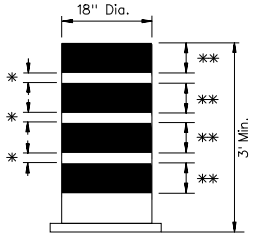

TRAFFIC DRUMS

Shall Have a Minimum of 2-White & 2-Orange Retroreflective Bands

* 2" Max. Non-Retroreflective Material

** 4" Min.– 6" Max. Retroreflective Material

NOTES:

1. ALL BARRICADES USED MUST COMPLY WITH NCHRP REPORT 350. SEE QUALIFIED PRODUCTS LIST FOR APPROVED PRODUCTS.
2. TYPE IIIB BARRICADES USED FOR TEMPORARY SIGN SUPPORTS, SIGNS SHALL BE MOUNTED 1' MINIMUM FROM GROUND AND COMPLY WITH MUTCD CURRENT EDITION.
3. MARKINGS FOR BARRICADE RAILS SHALL BE RETROREFLECTIVE ORANGE AND WHITE STRIPES SLOPING DOWNWARD AT AN ANGLE OF 45 DEGREES IN THE DIRECTION OF TRAFFIC AS SHOWN.

NEVADA DEPARTMENT OF TRANSPORTATION

TRAFFIC CONTROL BARRICADES

Signed Original On File	T-35.2 (625)	
CHIEF SAFETY/TRAFFIC ENGR.	ADOPTED 8/82	REVISION 5/09

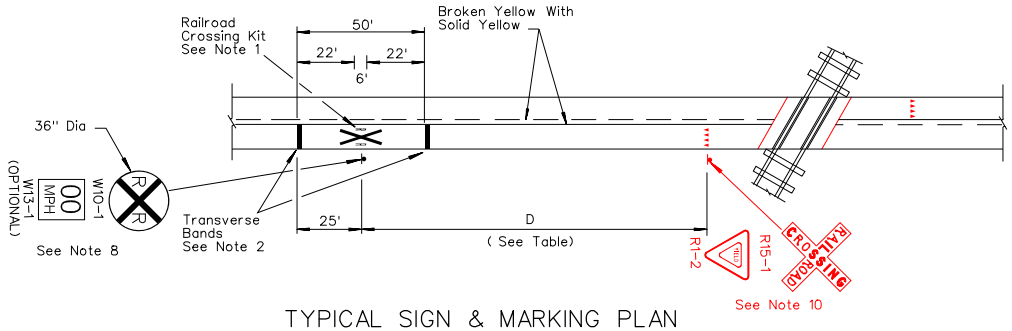

TYPICAL SIGN & MARKING PLAN

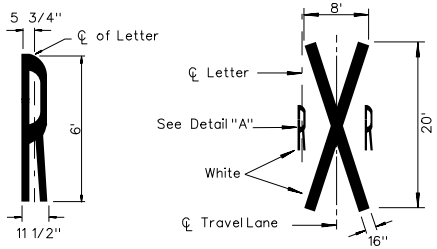

DETAIL A

RAILROAD CROSSING KIT
(70^2ft – includes two Rs & one X)

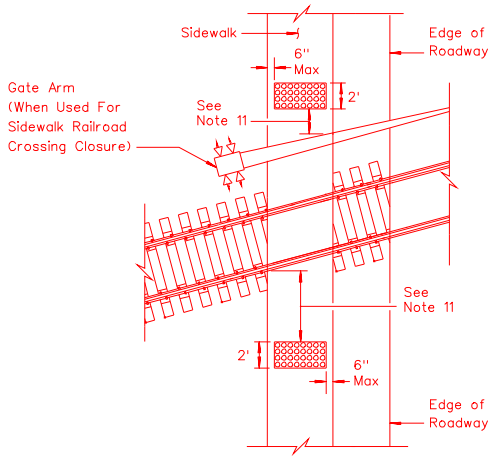

DETECTABLE WARNINGS
AT PEDESTRIAN RAILROAD CROSSING

NOTES:

1. ONE RAILROAD CROSSING KIT PER TRAVEL LANE.
2. IF NEEDED, SUPPLEMENTAL RAILROAD PAVEMENT MARKING SYMBOL(S) MAY BE PLACED BETWEEN THE FIRST RAILROAD PAVEMENT MARKING SYMBOL AND THE RAILROAD CROSSING, BUT SHOULD BE AT LEAST 50' FROM THE STOP/YIELD LINES.
3. A THREE-LANE ROADWAY SHOULD BE MARKED WITH A CENTERLINE FOR TWO-LANE APPROACH OPERATION ON THE APPROACH TO A RAILROAD CROSSING.
4. ON MULTI-LANE ROADS, THE TRANSVERSE BANDS SHOULD EXTEND ACROSS ALL APPROACH TRAVEL LANES, AND INDIVIDUAL RXR SYMBOLS SHOULD BE USED IN EACH APPROACH TRAVEL LANE.
5. PAVEMENT MARKINGS FOR STOP/YIELD LINES, TRANSVERSE BANDS AND CENTER LINES ARE REQUIRED IN ADDITION TO PAVEMENT MARKINGS AS SHOWN IN DETAIL A.
6. ADDITIONAL INFORMATION ON RAILROAD GRADE CROSSINGS CAN BE FOUND IN THE CURRENT MUTCD, PART VIII.
7. STOP/YIELD LINES SHALL BE PERPENDICULAR TO ROADWAY AND SHALL BE WHITE.
8. FOR SIGN MOUNTING DETAILS, SEE STANDARD PLAN DRAWINGS, T-31.1.1 THRU T-31.1.3, T-31.1.6, AND T-31.2.1.
9. THE DISTANCE X SHALL BE NOTED IN THE PLANS AND/OR STRUCTURE LIST.
10. AT A PASSIVE CROSSING A YIELD SIGN AND LINE SHALL BE USED UNLESS AN ENGINEERING STUDY OR JUDGEMENT DETERMINES A STOP SIGN AND LINE IS APPROPRIATE.
11. THE EDGE OF THE DETECTABLE WARNING NEAREST TO A RAILROAD CROSSING SHALL BE 1.5 FEET ± 0.1 FROM THE FACE OF THE GATE ARM IF THE GATE ARM EXTENDS ACROSS THE SIDEWALK. WHERE THERE IS NO PEDESTRIAN GATE, THE EDGE OF THE DETECTABLE WARNING NEAREST TO THE RAILROAD CROSSING SHALL BE 15 FEET FROM THE NEAREST RAIL.

LEGEND:

- SIGN
- R/R CROSSING SIGNAL AND GATE (TYPICAL)
- STOP BAR (TYPICAL) (24" SOLID WHITE)
- YIELD LINE (TYPICAL) See Sheet T-38.1.3.1
- DETECTABLE WARNING

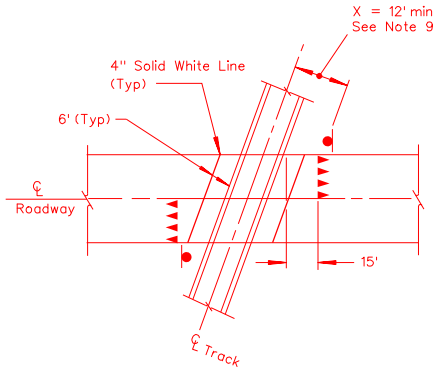

PASSIVE CROSSING

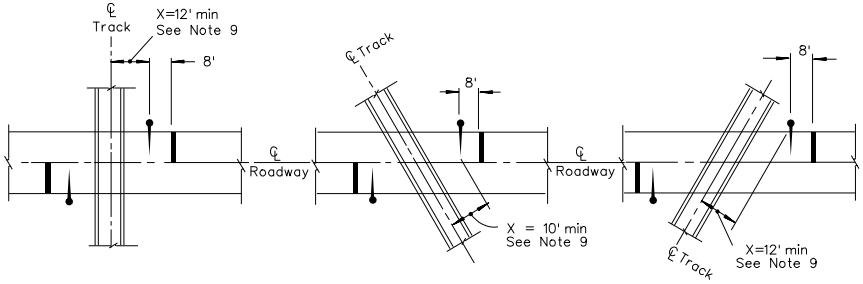

ACTIVE CROSSING

Table For Minimum Spacing of Advance Warning Sign

SPEED (MPH)	D (ft)
20	100
25	100
30	100
35	100
40	125
45	175
50	250
55	325
60	400
65	475
70	550
75	650

NEVADA DEPARTMENT OF TRANSPORTATION

RAILROAD CROSSING:
SIGNAL & GATE PLACEMENT
PAVEMENT MARKINGS
DETECTABLE WARNINGS

Signed Original On File	T-35.3	(627,634)
CHIEF SAFETY/TRAFFIC ENGR.	ADOPTED 7/96	REVISION 5/09

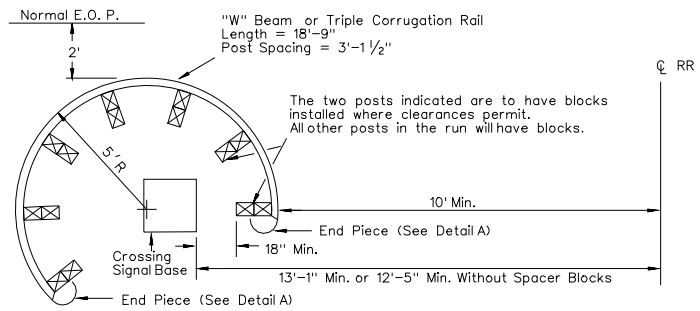

See Note 1

URBAN INSTALLATION

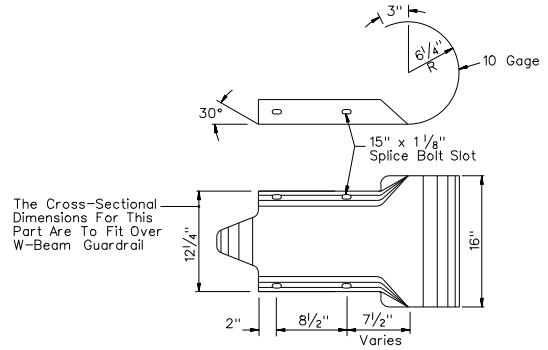

DETAIL A

NOTES:

1. RING TYPE GUARDRAIL MAY BE INSTALLED TO PROVIDE PROTECTION FOR THE SIGNAL ASSEMBLY IN INDUSTRIAL OR OTHER AREAS INVOLVING ONLY LOW-SPEED HIGHWAY TRAFFIC AND WHERE SIGNALS ARE VULNERABLE TO DAMAGE BY TURNING TRUCK TRAFFIC. USE OF RING TYPE GUARDRAIL REQUIRES APPROVAL BY THE CHIEF SAFETY ENGINEER OR THE CHIEF ROADWAY DESIGN ENGINEER.
2. FOR RAILROAD-HIGHWAY GRADE CROSSINGS MARKING DETAILS REFER TO STANDARD PLAN T-35.3.
3. FOR W-BEAM GUARDRAIL DETAILS SEE STANDARD PLAN R-8.5.1.
4. FOR TRIPLE CORRUGATION GUARDRAIL DETAILS, SEE STANDARD PLAN R-8.4.1.
5. SPECIAL GUARDRAIL TERMINAL END TO BE INSTALLED ON GUARDRAIL END NEAREST TO RAILROAD.
6. NO POST HOLES SHALL BE DRILLED NEXT TO THE SIGNAL APPARATUS WITHOUT FIRST NOTIFYING THE RAILROAD INSPECTOR.
7. FOR SIGNALS WITH LESS THAN 7', REFER TO STANDARD PLAN R-8.3.1 AND 1996 AASHTO ROADSIDE DESIGN GUIDE TABLE 5.3 FOR ALTERNATE POST SPACING.
8. FOR TRIPLE CORRUGATION TERMINAL CONNECTOR DETAILS NOT SHOWN REFER TO STANDARDIZED HIGHWAY BARRIER HARDWARE BY AASHTO-AGC-ARTBA REPORT MAY 1995.
9. FORM CONCRETE AROUND 6" X 8" POST WRAPPED WITH 1 LAYER OF 1/4" TO 1/2" THICK EXPANDED POLYSTYRENE FOAM SHEETING. DON'T NAIL POLYSTYRENE FOAM TO POST.

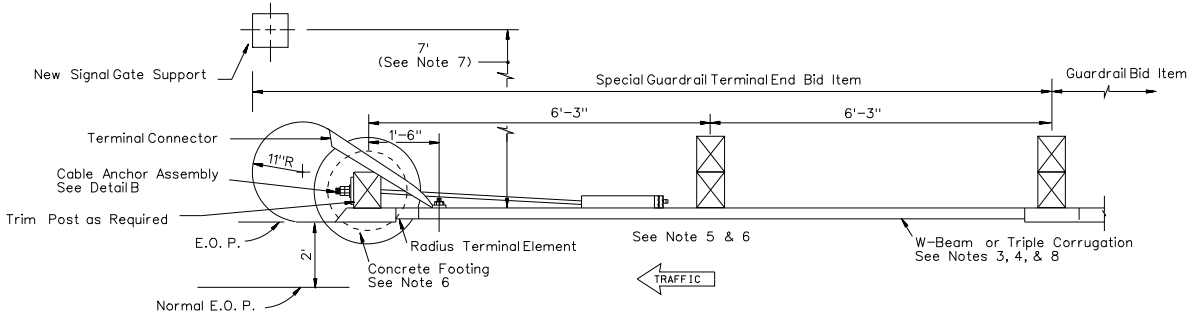

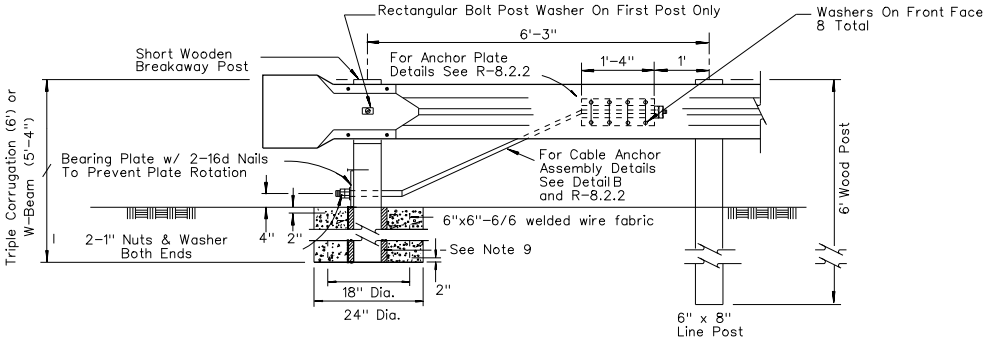

SPECIAL GUARDRAIL TERMINAL END

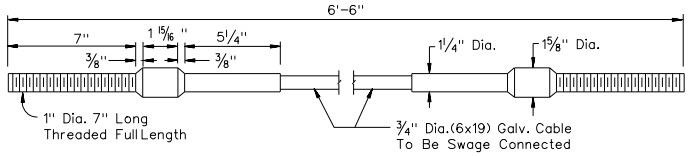

DETAIL B

NEVADA DEPARTMENT OF TRANSPORTATION

RAILROAD CROSSING GUARDRAIL DETAILS

Signed Original On File	T-35.3.1	(618)
CHIEF SAFETY/TRAFFIC ENGR.	ADOPTED 7/96	REVISION 6/02

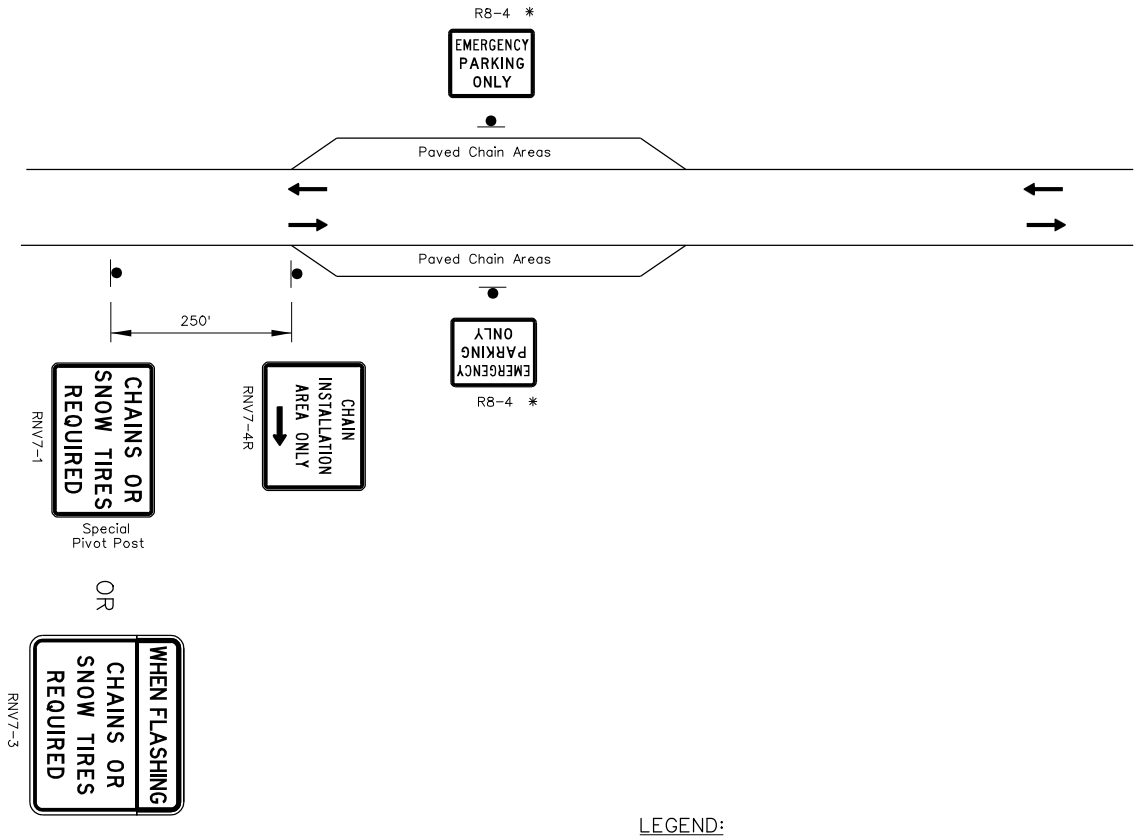

LEGEND:

* R8-4 Signs Should Be Placed A Minimum 200' Apart Along Paved Chain Area

NEVADA DEPARTMENT OF TRANSPORTATION

SIGNAGE FOR PAVED CHAIN AREAS

Signed Original On File	T-35.4	(627,634)
CHIEF SAFETY/TRAFFIC ENGR.	ADOPTED 9/06	REVISION

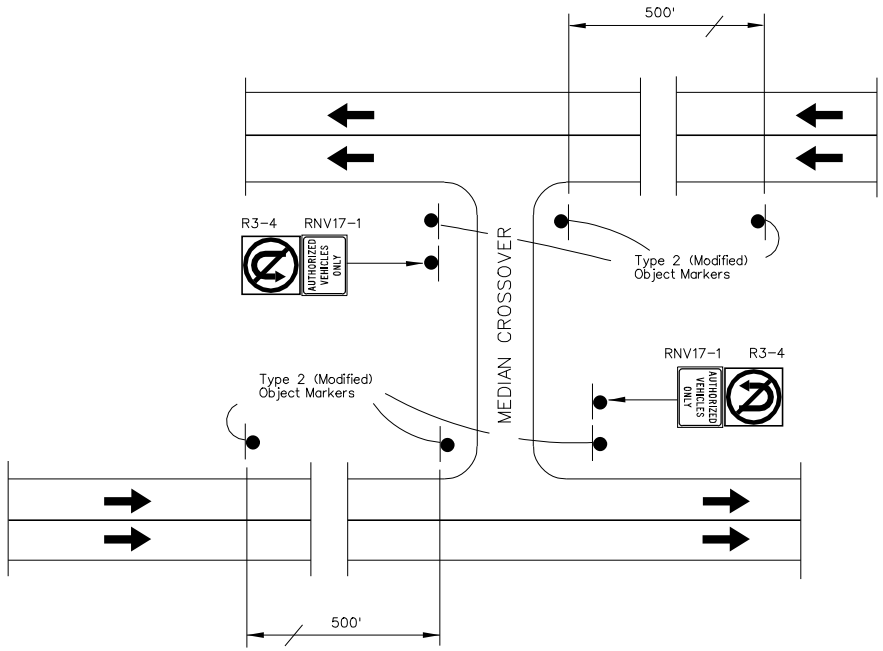

PLAN

NOTES:

1. MOUNTING HEIGHT TO BOTTOM OF "AUTHORIZED VEHICLES ONLY" SIGN SHALL BE 6' FROM ORIGINAL GROUND.
2. TYPE III REFLECTIVE SHEETING SHALL BE USED ON SIGN INSTALLATIONS AND TYPE 2 (MODIFIED) OBJECT MARKERS.
3. PLACE (6) TYPE 2 (MODIFIED) MARKERS ONE 500' IN ADVANCE OF MEDIAN CROSSOVER AND ONE ON EACH SIDE OF CROSSOVER AS SHOWN ON DRAWING.

NEVADA DEPARTMENT OF TRANSPORTATION

MEDIAN CROSSOVER DETAIL

Signed Original On File	T-35.5	(619)
CHIEF SAFETY/TRAFFIC ENGR.	ADOPTED 8/04	REVISION 9/06

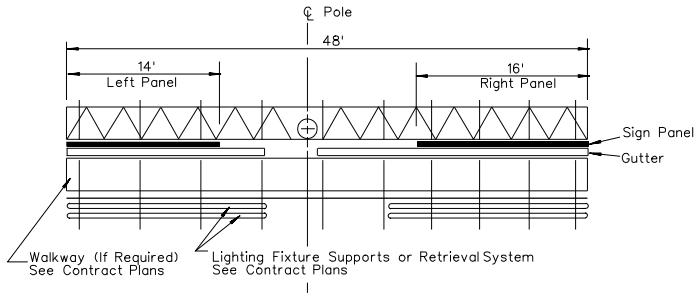

PLAN

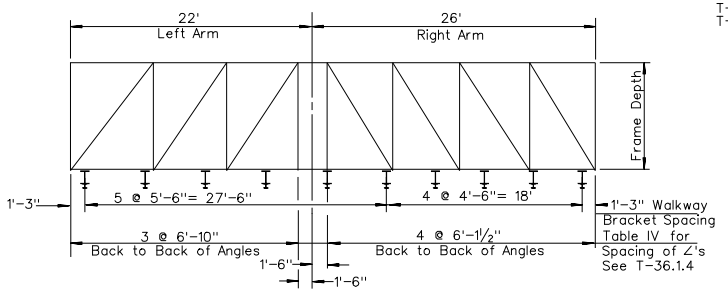

UNBALANCED SINGLE POST TYPE
EXAMPLE NO. 1

INSTRUCTIONS TO FABRICATOR

CONTRACT PLANS SHOW:

1. Sign Structure Type and Location
2. Length of Structure Frame
3. Panel Size and Locations on Structure
4. Post Type and Height To Bottom of Frame
5. Base Plate Elevation
6. Footing Elevation or Location of Alternate Pile Foundation
7. Photo Electric Cell Location If Required
8. Extent of Walkway Grating (If Required) and Type of Lighting System (Fixed or Luminaire Retrieval System)

REFER TO THE FOLLOWING SHEETS FOR DETAILS NOT SHOWN ON CONTRACT PLANS:

T-36.1.1 - Instructions & Examples
T-36.1.2 - Post Type II Thru VII
T-36.1.3 - Post Type I-S Thru VII-S
T-36.1.4 - Structural Frame Members (Single Post Type)
T-36.1.5 - Structural Frame Members (Two Post Type)
T-36.1.6 - Structural Frame Details
T-36.1.7 - Frame Juncture Details
T-36.1.8 - Removable Sign Panel Frames
T-36.1.8.1 - Removable Sign Panel Frames 110" and 120" Sign Panels
T-36.1.8.2 - Sign Extension Bracket Retrofit Methods A and B
T-36.1.9 & T-36.1.10 - Walkway Details No. 1 & No. 2
T-36.1.11 - Walkway Safety Railing Details
T-36.1.12 - Alternate Pile Foundations

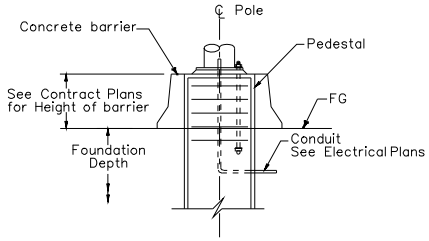

MEDIAN LOCATION

GENERAL NOTES AND SPECIFICATIONS:

DESIGN: A.A.S.H.T.O. SPECIFICATIONS FOR STRUCTURAL SUPPORTS FOR HIGHWAY SIGNS, LUMINAIRES, AND TRAFFIC SIGNALS, 4TH EDITION DATED 2001 (EXCLUDING SECTION II: FATIGUE DESIGN).

CONSTRUCTION: STANDARD SPECIFICATIONS FOR ROAD AND BRIDGE CONSTRUCTION AND THE SPECIAL PROVISIONS.

LOADING: BASIC WIND SPEED = 90 MPH
GROUP LOAD COMBINATIONS:
GROUP I - DEAD LOAD
GROUP II - DEAD LOAD + WIND LOAD
GROUP III - DEAD LOAD + ICE LOAD + ½WIND LOAD
WALKWAY LOADING:
DEAD LOAD + 500 LB. CONCENTRATED LIVE LOAD

UNIT STRESSES:
STRUCTURAL STEEL: Fy=36 ksi
REINFORCING STEEL: ASTM A615 Grade 60
CONCRETE PEDESTAL CLASS A OR AA: Fc=4000 psi
CONCRETE PILE CLASS D OR DA: Fc=4000 psi

FOOTING SOIL PRESSURE: 1¼ TONS/SQ.FT.

MINIMUM CLEARANCE: VERTICAL ROADWAY CLEARANCE 18'

WELDING: ALL WELDING CONTINUOUS UNLESS OTHERWISE NOTED ON THE PLANS. ALL WELDING TO DONE IN ACCORDANCE WITH THE STANDARD SPECIFICATIONS FOR ROAD AND BRIDGE CONSTRUCTION.

FINISH: ALL STEEL PARTS TO BE HOT-DIPPED GALVANIZED AFTER FABRICATION EXCEPT AS SHOWN ON PLANS OR AS CALLED FOR IN SPECIAL PROVISIONS.

WALKWAY BRACKETS: MAINTAIN UNIFORM SPACING WHERE POSSIBLE. MAXIMUM SPACING SHALL NOT EXCEED 5'-6".

LIGHTING FIXTURE SUPPORTS: WHERE DISTANCE FROM WALKWAY BRACKET TO END OF SIGN PANEL EXCEEDS 1'-4", EXTEND LIGHTING FIXTURE SUPPORTS TO NEXT WALKWAY BRACKET. SEE EXAMPLE NO. 2.

WALKWAY AND SAFETY RAILING: WALKWAY (WHEN REQUIRED) TO BE CONTINUOUS FOR ENTIRE LENGTH OF FRAME FOR SINGLE POST SIGNS AND FOR 2 POST SIGNS FROM THE NEAREST POST CONTINUOUS ACROSS ALL THE SIGN PANELS. SAFETY RAILING TO PROTECT ENTIRE WALKWAY, BUT CONTINUOUS FOR NO MORE THAN 11" IN ONE UNIT.

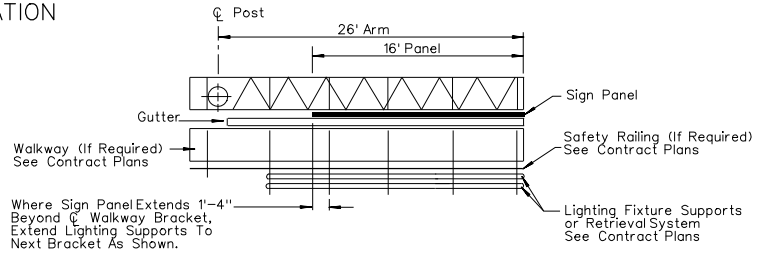

PLAN
CANTILEVER SINGLE
POST TYPE
EXAMPLE NO.2

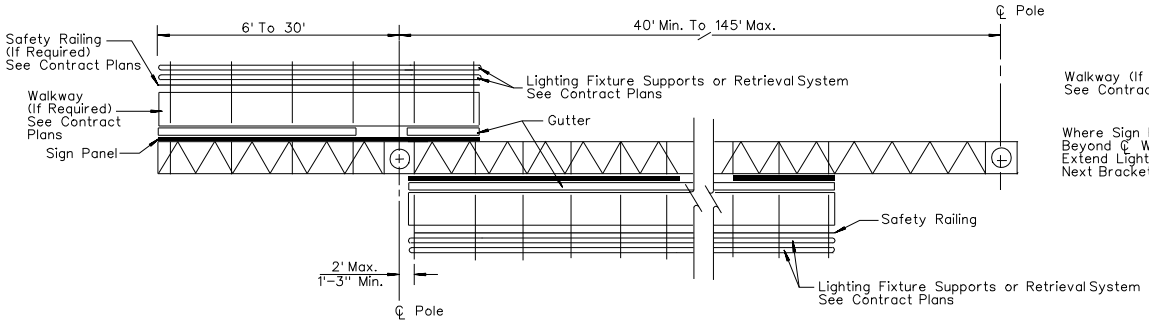

PLAN
TWO POST TYPE WITH CANTILEVER
(PART DOUBLE-FACED)
EXAMPLE NO. 3

NEVADA DEPARTMENT OF TRANSPORTATION

OVERHEAD SIGNS
INSTRUCTIONS & EXAMPLES

Signed Original On File	T-36.1.1	(627)
CHIEF BRIDGE ENGINEER	ADOPTED 11/95	REVISION 10/06

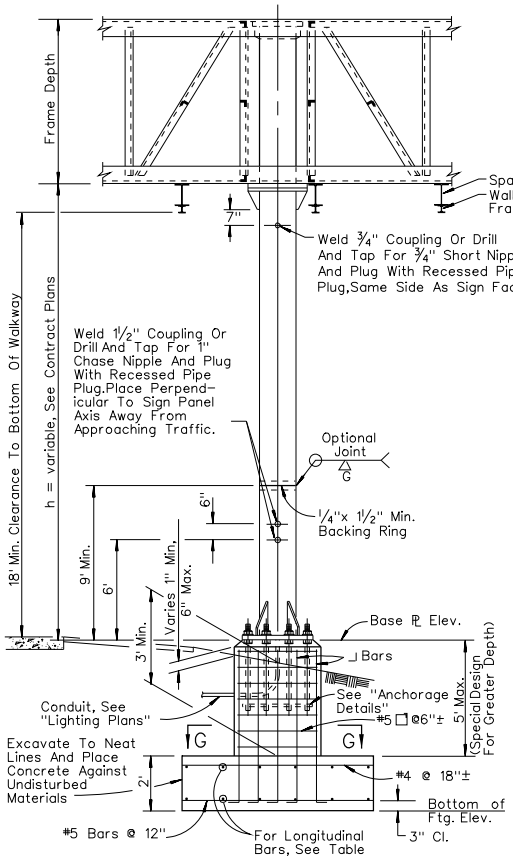

ELEVATION

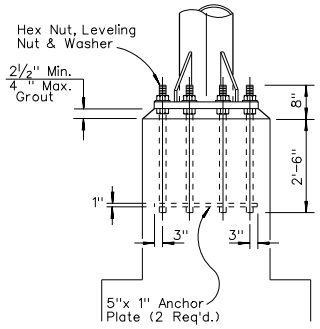

ANCHORAGE DETAILS

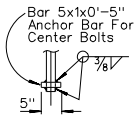

SINGLE SIDE BOLT

(Type V & VI)

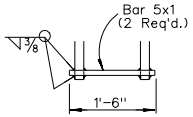

DOUBLE SIDE BOLT

(Type VII & VIII)

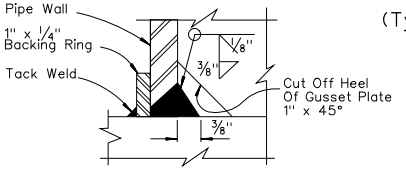

DETAIL 7
THRU POST @ BASE PL

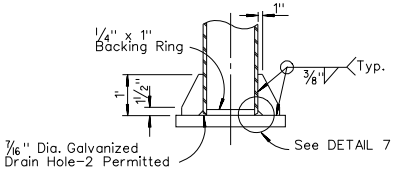

GUSSET DETAIL

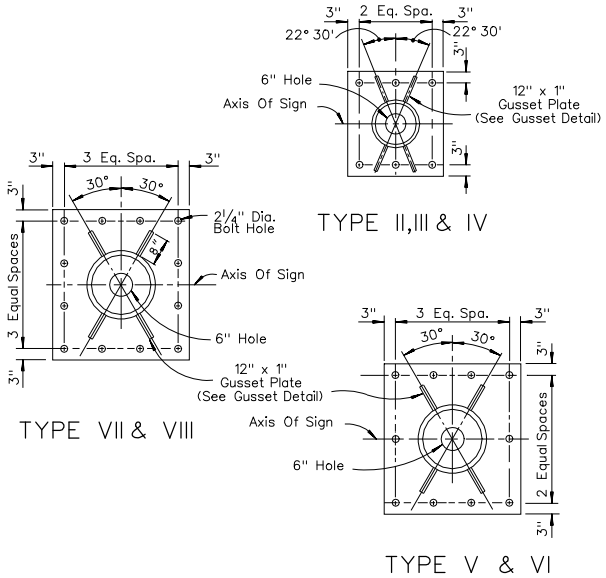

TYPICAL BASE PLATES

Post Type	Pipe Size NPS	Pipe Size t(in)	Cap Plate Size	Base Plate Size (Note 2)	2"ϕ Anchor Bolts	Pedestal Size (Note 2)	Footing Size (Note 2)	Longitudinal Footing Reinforcement Top	Longitudinal Footing Reinforcement Bottom	⌋ Bars
II	12"	3/8"	1'-7"x1'-7"x 7/8"	2'-4"x2'-1"x2"	6	2'-11"x2'-8"	7'-10"x10'	6-#4 Bars	9-#5 Bars	#5
III	14"	1/2"	1'-8"x1'-8"x 7/8"	2'-7"x2'-3"x2"	6	3'-2"x2'-10"	8'x12'	8-#5 Bars	8-#7 Bars	#6
IV	16"	1/2"	1'-10"x1'-10"x 7/8"	3'-1"x2'-9"x2"	6	3'-8"x3'-4"	8'x14'	9-#5 Bars	9-#8 Bars	#6
V	18"	1/2"	2'x 2'x 7/8"	3'-3"x 3'x 2"	10	3'-10"x3'-7"	9'x15'	9-#5 Bars	9-#9 Bars	#8
VI	20"	1/2"	2'-2"x2'-2"x1"	3'-3"x 3'x 2"	10	3'-10"x3'-7"	9'x16'	8-#6 Bars	8-#10 Bars	#8
VII	24"	1/2"	2'-6"x2'-6"x1"	3'-7"x3'-3"x2"	12	4'-3"x3'-11"	10'x17'	10-#6 Bars	10-#10 Bars	#10
VIII	24"	5/8"	2'-6"x2'-6"x1"	3'-9"x3'-6"x2 1/2"	12	4'-5"x4'-1"	10'x17'	10-#6 Bars	10-#10 Bars	#11

NOTES:

1. FOR GENERAL NOTES SEE "INSTRUCTIONS AND EXAMPLES" SHEET T-36.1.1.
2. LONGER SIDE OF BASE PLATES, PEDESTALS, AND FOOTINGS SHALL BE ORIENTED PERPENDICULAR TO THE SIGN AXIS.
3. BACKFILL SHALL BE IN PLACE PRIOR TO ERECTION OF POST.
4. THREAD UPPER 8" OF ANCHOR BOLTS AND GALVANIZE UPPER 1'.
5. SPREAD FOOTING SHOWN. ALTERNATE PILE FOUNDATION IS OPTIONAL.
6. FOR REINFORCEMENT, EMBEDMENT IS CLEAR TO OUTSIDE OF BAR AND IS 2" TO MAIN REINFORCEMENT, EXCEPT AS NOTED.
7. ANCHOR PLATES MAY BE RETAINED WITH HEX NUT OR FORMED HEAD.
8. ON SINGLE POST SIGN STRUCTURES, THE POST SHALL BE RAKED OUT OF PLUMB, WITH THE USE OF THE LEVELING NUTS TO MAKE THE BOTTOM OF THE SIGN FRAME LEVEL.
9. AT FINAL POSITION OF POST ALL TOP AND BOTTOM NUTS SHALL BE TIGHTENED AGAINST BASE PLATE.
10. WHEN FOUNDATION IS LOCATED ON A STEEP SLOPE WITH EXPOSED FACE OF CONCRETE ADJACENT TO TRAFFIC, SEE DETAIL C ON "ALTERNATE PILE FOUNDATION" SHEET.

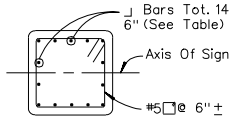

SECTION G-G

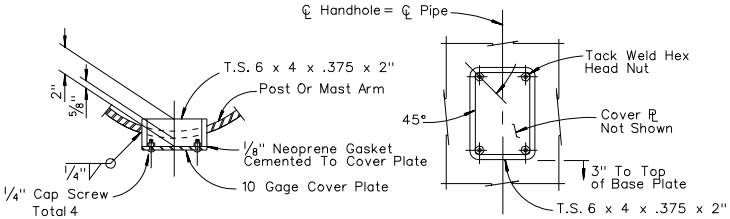

HANDHOLE AND COVER DETAILS

Locate Handhole & Cover Away From Traveled Way

NEVADA DEPARTMENT OF TRANSPORTATION

OVERHEAD SIGNS
SINGLE POST
TYPES II THRU VIII

Signed Original On File	T-36.1.2	(627)
CHIEF BRIDGE ENGINEER	ADOPTED 7/96	REVISION 1/05

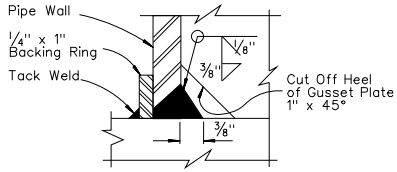

DETAIL 8

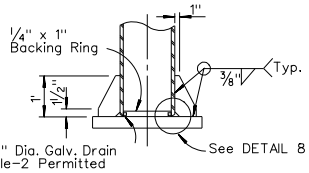

SECTION S-S

TABLE XIV										
Post Type	Pipe Size NPS	Pipe Size t(in)	Split	Base Plate Size (Note 2)	Anchor Bolts	Pedestal Size (Note 2)	Footing Size (Note 2)	Longitudinal Footing Reinforcement Top	Longitudinal Footing Reinforcement Bottom	⌟ Bars
I-S	10"	23/64	4"	2'-3"x1'-9"x 2"	6-2"ϕ	2'-9"x2'-3"	5'x 10'	5-#4 Bars	5-#6 Bars	#6
II-S	12"	3/8	5"	2'-6"x1'-11"x 2"	6-2"ϕ	3'x 2'-6"	6'x 11'	6-#4 Bars	6-#7 Bars	#6
III-S	14"	1/2	5"	2'-9"x 2'x 2"	6-2"ϕ	3'-4"x2'-7"	7'x 13'	8-#5 Bars	8-#9 Bars	#9
IV-S	16"	1/2	6"	2'-11"x2'-7'x 2"	8-2"ϕ	3'-6"x3'-2"	8'x 14'	8-#5 Bars	8-#9 Bars	#9
V-S	18"	1/2	7"	3'-1"x2'-9"x 2"	8-2"ϕ	3'-8"x3'-4"	8'x 16'	8-#5 Bars	8-#9 Bars	#9
VI-S	20"	1/2	8"	3'-5"x2'-9"x 2"	8-2"ϕ	4'x 3'-4"	9'x 17'	9-#5 Bars	9-#10 Bars	#10
VII-S	24"	1/2	8"	3'-9"x3'-3"x 2"	8-2 1/4"ϕ	4'-5"x3'-11"	10'x 18'	10-#6 Bars	10-#11 Bars	#11
VIII-S	24"	3/4	8"	3'-9"x3'-3"x 2"	8-2 1/4"ϕ	4'-5"x3'-11"	10'x 18'	10-#6 Bars	10-#11 Bars	#11

NOTES:

1. FOR GENERAL NOTES SEE "INSTRUCTIONS AND EXAMPLES" SHEET T-36.1.1
2. LONGER SIDE OF BASE PLATES, PEDESTALS, AND FOOTINGS SHALL BE ORIENTED PERPENDICULAR TO THE SIGN AXIS.
3. BACKFILL SHALL BE IN PLACE PRIOR TO ERECTION OF POST.
4. THREAD UPPER 8" OF ANCHOR BOLTS AND GALVANIZE UPPER 1'.
5. SPREAD FOOTING SHOWN. ALTERNATE PILE FOUNDATION IS OPTIONAL.
6. FOR REINFORCEMENT, EMBEDMENT IS CLEAR TO OUTSIDE OF BAR AND IS 2" TO MAIN REINFORCEMENT, EXCEPT AS NOTED.
7. ANCHOR PLATES MAY BE RETAINED WITH HEX NUT OR FORMED HEAD.

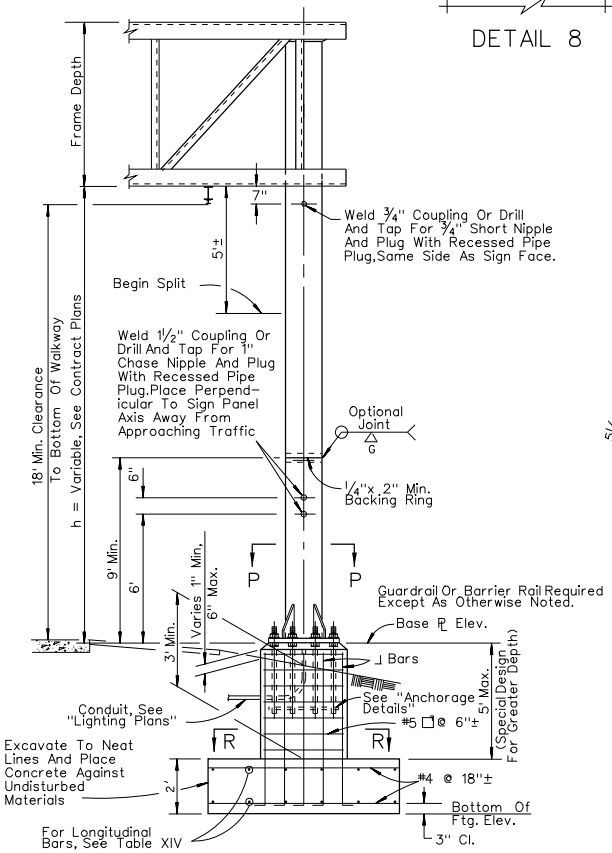

ELEVATION

Post Without Cantilever Shown.

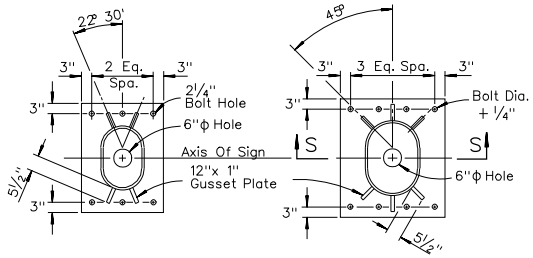

6 ANCHOR TYPE 8 ANCHOR TYPE

TYPICAL BASE PLATES

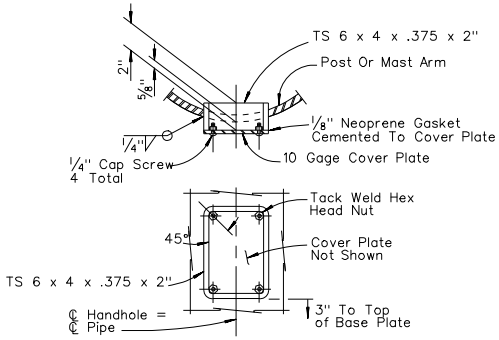

HANDHOLE & COVER DETAIL

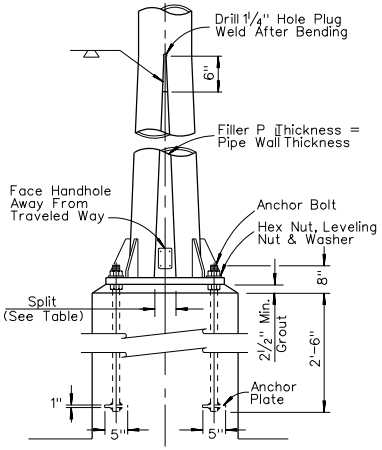

ANCHORAGE DETAILS

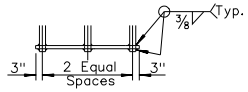

6 ANCHOR TYPE

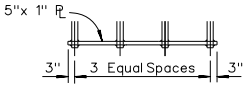

8 ANCHOR TYPE

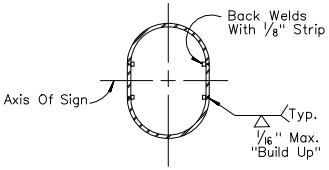

SECTION P-P

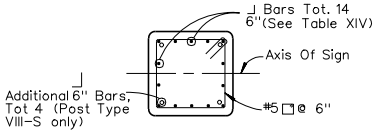

SECTION R-R

NEVADA DEPARTMENT OF TRANSPORTATION

OVERHEAD SIGNS
TWO POST
TYPES I-S thru VIII-S

Signed Original On File	T-36.1.3 (627)	
CHIEF BRIDGE ENGINEER	ADOPTED 11/95	REVISION 1/05

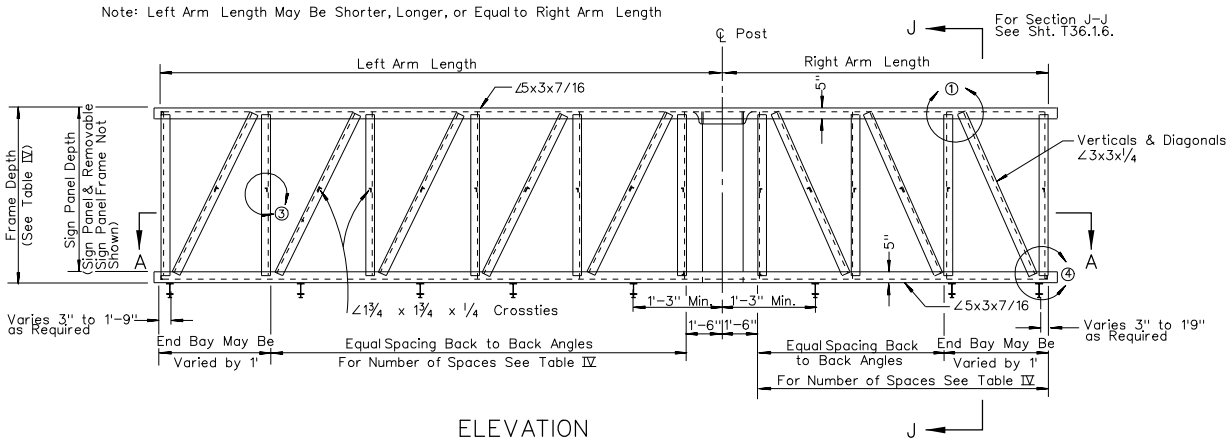

ELEVATION

TABLE IV

Sign Panel Depth	Frame Depth	Maximum Vertical ∠Spacing	Arm Length See Note No. 10
70"	6'-4"	5'-6"	4'
80"	7'-2"	6'	5'
90"	8'	7'	5'
100"	8'-10"	7'	6'
110"	8'-10"	7'-6"	6'
120"	8'-10"	7'-6"	6'

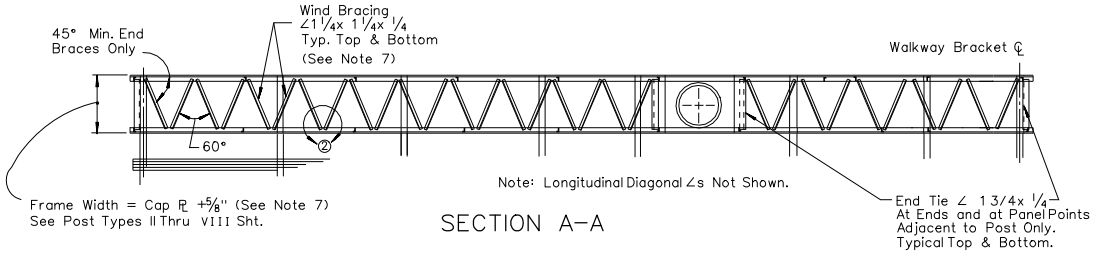

SECTION A-A

NOTES:

1. FOR DETAILS 1 THRU 4 SEE "STRUCTURAL FRAME DETAILS" SHT. T-36.1.6.
2. FOR SIGN PANEL FRAMES SEE "REMOVABLE SIGN PANEL FRAMES " SHT. T-36.1.8.
3. FOR CONNECTION OF FRAME TO POST SEE "FRAME JUNCTURE DETAILS" SHT. T-36.1.7.
4. FOR WALKWAY SEE "STANDARD WALKWAY DETAILS NO. 1 & NO. 2 SHTS. T-36.1.9 & T-36.1.10
5. FOR TYPICAL WALKWAY ARRANGEMENT, SPECIAL INSTRUCTIONS AND EXAMPLES, SEE "INSTRUCTIONS AND EXAMPLES" SHT. T-36.1.1.
6. MINIMUM LENGTH OF FRAME=12'. MAXIMUM LENGTH OF FRAME=60'.
7. FOR ARM LENGTHS 35' TO 40' AND SIGN DEPTHS 80" THRU 120":
   A. USE 1½ x 1½ x ¼ WIND BRACING
   B. FRAME WIDTH=CAP PLATE ⅞".
8. ON SINGLE POST SIGN STRUCTURES, THE POST SHALL BE RAKED OUT OF PLUMB, WITH THE USE OF THE LEVELING NUTS TO MAKE THE BOTTOM OF THE SIGN FRAME LEVEL.
9. AT FINAL POSITION OF POST ALL TOP AND BOTTOM NUTS SHALL BE TIGHTENED AGAINST BASE PLATE.
10. DIAGONAL NOT REQUIRED IF ARM LENGTH IS EQUAL TO OR LESS THAN SHOWN IN THIS COLUMN OF TABLE IV.

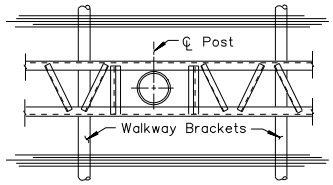

PART PLAN OF DOUBLE FACED TYPE AT POST

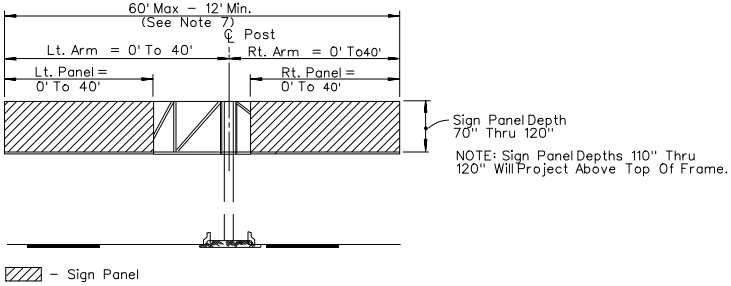

LIMITING DIMENSIONS OF FRAME & SIGN PANEL

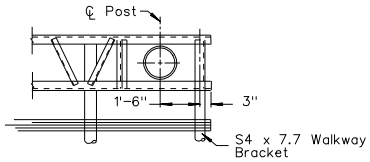

PART PLAN OF CANTILEVER TYPE AT POST

NEVADA DEPARTMENT OF TRANSPORTATION

OVERHEAD SIGNS
SINGLE POST
STRUCTURAL FRAME MEMBERS

Signed Original On File	T-36.1.4	(627)
CHIEF BRIDGE ENGINEER	ADOPTED 11/95	REVISION 7/04

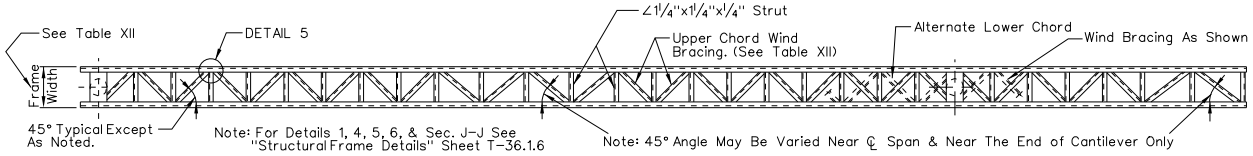

PLAN

TABLE X

PANEL DEPTH	FRAME DEPTH	MAX VERTICAL ∠ SPACING
70"	6'-4"	72"
80"	7'-2"	72"
90"	8'	90"
100"	8'-10"	90"
110"	8'-10"	120"
120"	8'-10"	120"

TABLE XI

CAMBER FOR FABRICATION AT ℄ SPAN	
SPAN	CAMBER
40' - 50'	½"
51' - 100'	1"
101' - 145'	1½"

FABRICATE CAMBER TO APPROXIMATE PARABOLA. CAMBER OF CANTILEVER ARM = + ½" FOR ARMS GREATER THAN 10'.

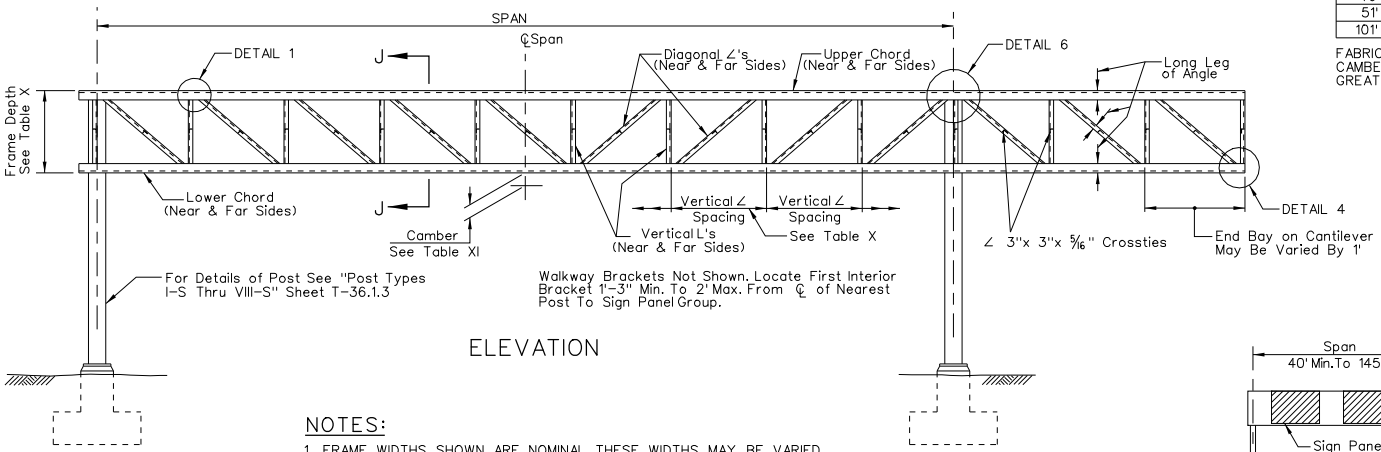

ELEVATION

NOTES:

1. FRAME WIDTHS SHOWN ARE NOMINAL. THESE WIDTHS MAY BE VARIED BY ¼" TO STANDARDIZE FABRICATION METHODS.

* ADD 6" TO FRAME WIDTH FOR POST TYPE V-S & VI-S ; ADD 1' FOR POST TYPE VII-S AND VIII-S.

** ADD 6" TO FRAME WIDTH FOR POST TYPE VII-S AND VIII-S.

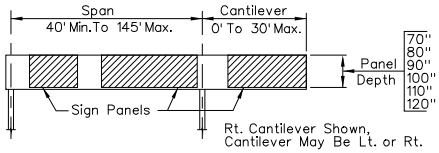

RANGE OF STRUCTURE SIZES

NOTE: Sign Panel Depths 110" And 120" Will Project Above Top of Frame.

Span	70" PANEL DEPTH					80" PANEL DEPTH					90" PANEL DEPTH				
	Frame Width	Chord ∠'s	Vertical ∠'s	Diagonal ∠'s	Wind Bracing	Frame Width	Chord ∠'s	Vertical ∠'s	Diagonal ∠'s	Wind Bracing	Frame Width	Chord ∠'s	Vertical ∠'s	Diagonal ∠'s	Wind Bracing
40'-50'	2'*	5 x 3½ x 7/16	3 x 3 x ¼	3 x 3 x ¼	2½ x 2½ x ¼	2'*	5 x 3½ x 7/16	3 x 3 x ¼	3 x 3 x ¼	2½ x 2½ x ¼	2'*	5 x 3½ x 7/16	3 x 3 x 5/16	3 x 3 x 5/16	2½ x 2½ x ¼
51'-60'	2'*	5 x 3½ x 7/16				2'*	5 x 3½ x 7/16				2'*	5 x 3½ x 7/16			
61'-70'	2'-6"**	5 x 3½ x 7/16				2'-6"**	5 x 3½ x 7/16				2'-6"**	5 x 3½ x 7/16			
71'-80'	2'-6"**	6 x 4 x ½				2'-6"**	6 x 4 x ½				2'-6"**	6 x 4 x ½			
81'-90'	3'	6 x 4 x ½				3'	6 x 4 x ½				3'	6 x 4 x ½			
91'-100'	3'	6 x 4 x ½				3'	6 x 4 x ½				3'	6 x 4 x ½			
101'-110'	3'	7 x 4 x ⅝				3'	7 x 4 x ⅝				3'	7 x 4 x ⅝			
111'-120'	3'	7 x 4 x ⅝				3'	7 x 4 x ⅝				3'	7 x 4 x ⅝			
121'-132'	3'	8 x 4 x ¾				3'	8 x 4 x ¾				3'	8 x 4 x ¾			
133'-145'	3'	8 x 4 x ¾				3'	8 x 4 x ¾				3'	8 x 4 x ¾			

Span	100" Panel Depth					110" AND 120" PANEL DEPTH				
	Frame Width	Chord ∠'s	Vertical ∠'s	Diagonal ∠'s	Wind Bracing	Frame Width	Chord ∠'s	Vertical ∠'s	Diagonal ∠'s	Wind Bracing
40'-50'	2'*	5 x 3½ x 7/16	3 x 3 x 5/16	3 x 3 x 5/16	2½ x 2½ x ¼	2'*	5 x 3½ x 7/16	3 x 3 x 5/16	3 x 3 x 5/16	2½ x 2½ x ¼
51'-60'	2'*	5 x 3½ x 7/16				2'-6"**	5 x 3½ x 7/16			
61'-70'	2'-6"**	5 x 3½ x 7/16				3'	5 x 3½ x 7/16			
71'-80'	3'	6 x 4 x ½				3'-6"	6 x 4 x ½			
81'-90'	3'	6 x 4 x ½				3'-6"	6 x 4 x ½			
91'-100'	3'	6 x 4 x ½				3'-6"	6 x 4 x ½			
101'-110'	3'-6"	7 x 4 x ⅝				3'-6"	7 x 4 x ⅝			
111'-120'	3'-6"	7 x 4 x ⅝				3'-6"	8 x 4 x ¾			3 x 3 x ½
121'-132'	3'-6"	8 x 4 x ¾				3'-6"	8 x 4 x ¾			3 x 3 x ½
133'-145'	3'-6"	8 x 4 x ¾				3'-6"	8 x 4 x ¾			3 x 3 x ½

TABLE XII

NEVADA DEPARTMENT OF TRANSPORTATION

OVERHEAD SIGNS
TWO POST
STRUCTURAL FRAME MEMBERS

Signed Original On File	T-36.1.5	(627)
CHIEF BRIDGE ENGINEER	ADOPTED 1/95	REVISION 2/03

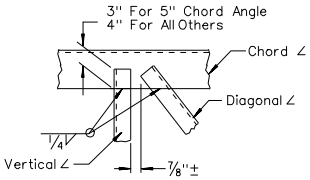

DETAIL 1

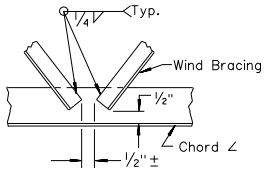

DETAIL 2

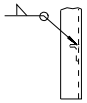

DETAIL 3

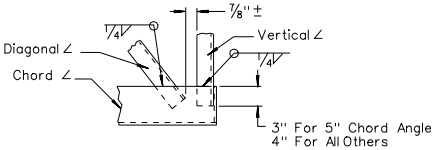

DETAIL 4

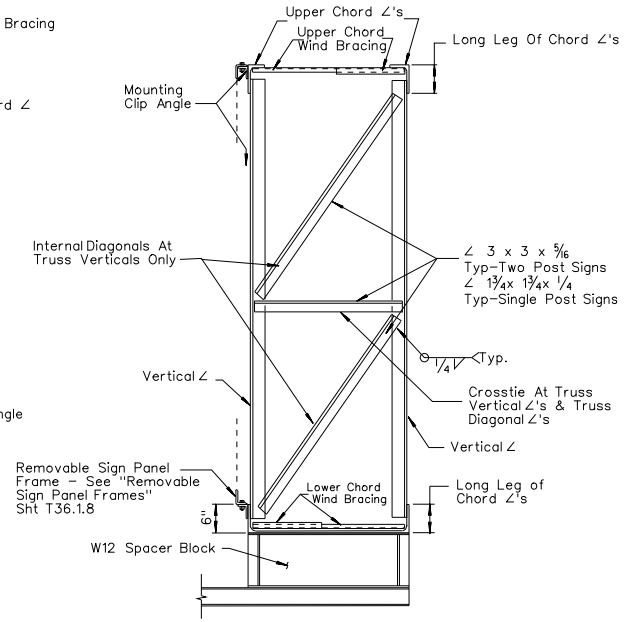

TYPICAL SECTION J-J

Note:
Diagonal ∠'s in Plane of Truss,
Not Shown. Bracing Shown Is
At All Vertical ∠'s Of Truss.

SPLICE NOTES:

SPECIFICATIONS:
THE BOLTED SPLICE SHALL CONFORM TO CURRENT "SPECIFICATIONS FOR STRUCTURAL JOINTS USING ASTM A325 BOLTS".

LOCATION OF SPLICES:
THE SPLICE SHALL BE LOCATED SO AS NOT TO INTERFERE WITH MOUNTING THE WALKWAY BRACKETS OR THE CLIP ANGLES FOR THE REMOVABLE SIGN PANEL FRAME. THE WIND BRACING IN THE AREA OF THE BOLTED CHORD SPLICE SHALL BE BOLTED TO THE CHORD ANGLES WITH A 3/8" UNFINISHED BOLT, WITH HEX HEAD AND NUT, 2 CUT WASHERS AND LOCK WASHER.

BOLTS:
THE A325 BOLTS SHALL BE HIGH STRENGTH WITH AN INTERFERENCE TYPE BODY AND TORQUED TO THE REQUIRED AMOUNT AS STATED IN THE ABOVE SPECIFICATIONS.

FILLER PLATE:
THE PLATES WELDED TO THE ANGLE LEGS ON THE INSIDE SHALL BE WELDED BEFORE PUNCHING THE BOLT HOLES. THEY SHALL BE THE SAME LENGTH AS THE COVER PLATES. THE PLATES ARE NOT NECESSARY ON THE SINGLE POST SIGNS IF THE SPLICE IS LOCATED OVER 1/3 OF THE CANTILEVER LENGTH FROM THE POST ALTERNATIVE SPLICE DETAILS MAY BE USED IF APPROVED BY THE ENGINEER.

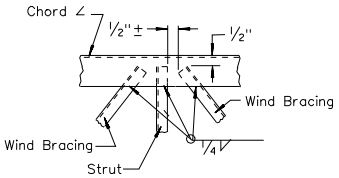

DETAIL 5

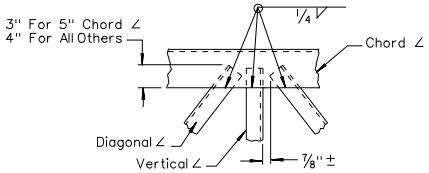

DETAIL 6

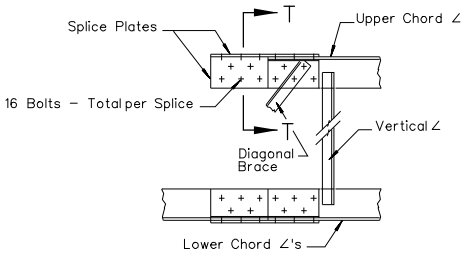

OPTIONAL
BOLTED CHORD SPLICE

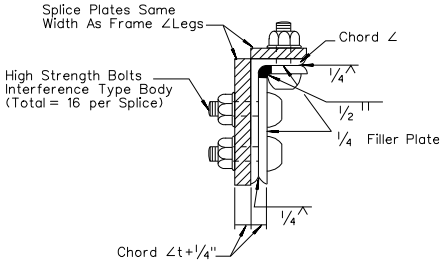

SECTION T-T

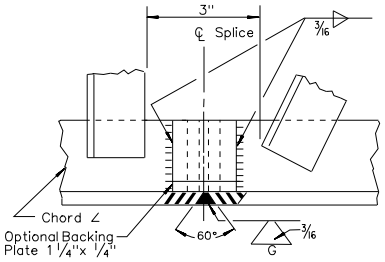

WELDED CHORD SPLICE

Note:
1. Prepare Edges By Beveling to Angle Shown.
2. Weld to 100% Full Penetration.
3. Grind Flush With Base Metal.

BOLTED CHORD SPLICE	
Chord ∠ (Inch.)	Nominal Bolt Diam. (Inch.)
TWO POST SIGNS	
5x3 1/2x 7/16	3/4
6x4x 1/2	7/8
7x4x 5/8	1
8x4x 5/8	1 1/4
SINGLE POST SIGNS	
5x3x 7/16	3/4

NEVADA DEPARTMENT OF TRANSPORTATION

OVERHEAD SIGNS
STRUCTURAL FRAME DETAILS

Signed Original On File	T-36.1.6	(627)
CHIEF BRIDGE ENGINEER	ADOPTED 7/96	REVISION 2/03

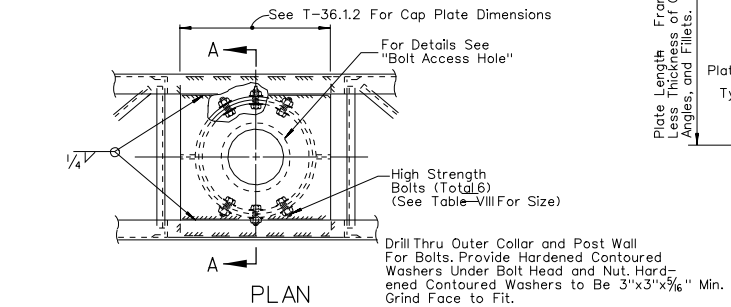

PLAN

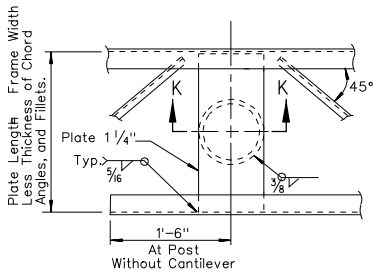

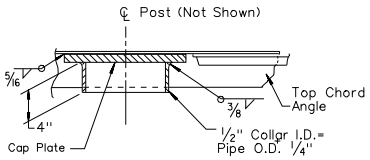

SECTION K-K
WITHOUT PHOTOELECTRIC CONTROL UNIT

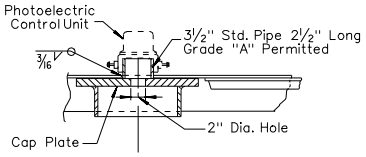

SECTION K-K
WITH PHOTOELECTRIC CONTROL UNIT

UPPER CHORD CONNECTION TO POST
TWO POST TYPE

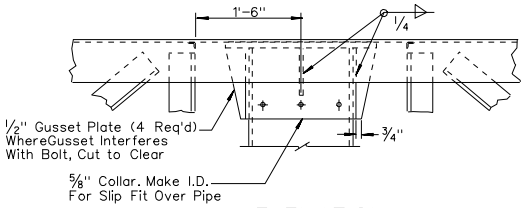

ELEVATION

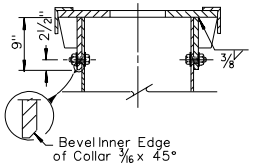

SECTION A-A

UPPER JUNCTURE CONNECTION
SINGLE POST TYPE

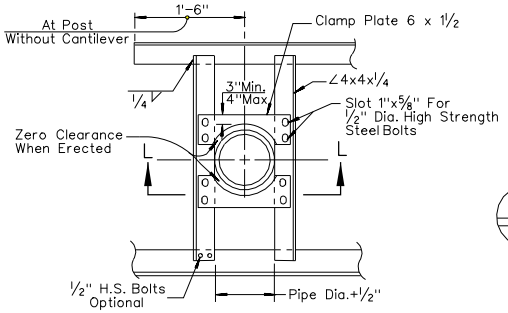

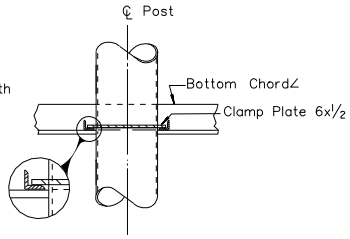

SECTION L-L

LOWER CHORD CONNECTION TO POST
TWO POST TYPE

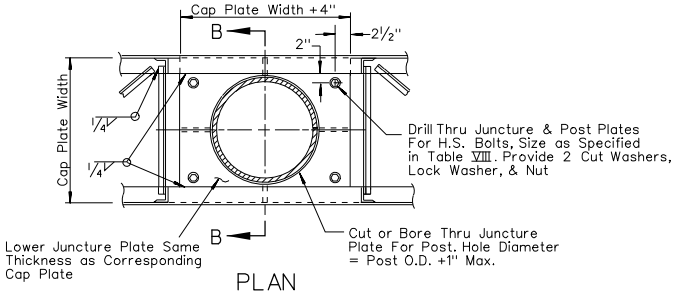

PLAN

TABLE VIII	
Post Type	Bolt Size
II	7/8"
III	1"
IV	1 1/8"
V	1 1/8"
VI	1 1/4"
VII	1 1/4"

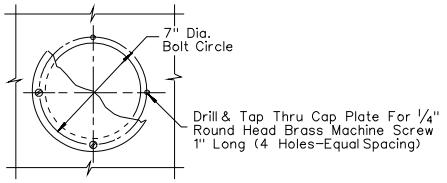

PLAN

NOTES: (SINGLE POST TYPE)

1. DRILLED HOLES FOR UNFINISHED BOLTS SHALL NOT EXCEED NOMINAL BOLT DIAMETER BY MORE THAN 1/16".
2. ALL BOLTS, NUTS AND WASHERS SHALL BE GALVANIZED.
3. IN ALL CASES, SIGN FRAME SHALL BE SUPPORTED AT TOP OF POST. BEARING SURFACE AT TOP OF POST SHALL BE FINISHED TRUE.
4. AT LOWER JUNCTURE CONNECTION, SHIMS SHALL BE USED WHERE ANY CLEARANCE EXISTS BETWEEN BOTTOM OF FRAME AND POST P PRIOR TO TIGHTENING OF BOLTS IN LOWER CONNECTION. SHIMS MAY BE GALVANIZED STEEL CUT WASHERS.

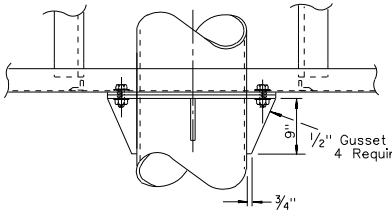

ELEVATION

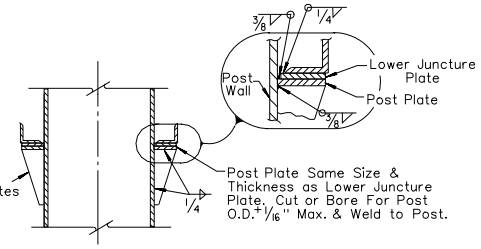

SECTION B-B

LOWER JUNCTURE CONNECTION
SINGLE POST TYPE

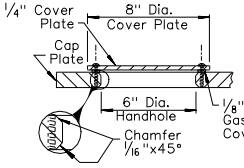

SECTION
WITHOUT PHOTOELECTRIC CONTROL UNIT

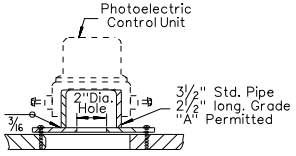

SECTION
WITH PHOTOELECTRIC CONTROL UNIT

BOLT ACCESS HOLE
SINGLE POST TYPE

NEVADA DEPARTMENT OF TRANSPORTATION

OVERHEAD SIGNS
FRAME JUNCTURE DETAILS

Signed Original On File	T-36.1.7	(627)
CHIEF BRIDGE ENGINEER	ADOPTED 7/96	REVISION 1/05

FRAME NOTES:

Frames for Signs Greater than 20' in Length Shall be Fabricated In Two Sections With Left Section A Multiple of 4' in Length. See Table A. Sections Shall be Hoisted Into Place Individually and Bolted Together As Per Detail 11 Prior to Tightening of Mounting Clip Bolts.
Bolting Two Sections Together and Hoisting Simultaneously Will Not be Permitted.

Table A

Sign Length	Left Section	Right Section
22'	12'	10'
24'	12'	12'
26'	12'	14'
28'	16'	12'
30'	16'	14'
32'	16'	16'
34'	16'	18'
36'	20'	16'
38'	20'	18'
40'	20'	20'

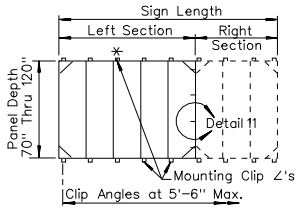

✳ - 110" And 120" Sign Panel Frames Will Project Above The Top Chord Of The Truss. In These Cases, The Top Clips Shall Be Bolted To Vertical Frame Members. SEE SHEET T-36.1.8.1

REMOVABLE FRAME GREATER THAN 20'

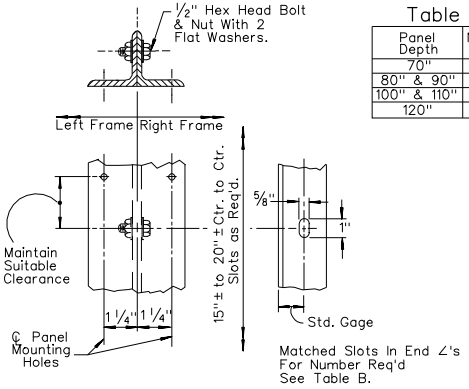

Table B

Panel Depth	No. of Slots
70"	3
80" & 90"	4
100" & 110"	5
120"	6

DETAIL 11

Note:
Panel Mounting Holes Not Shown.
Panel Lengths Available in 2' Increments.

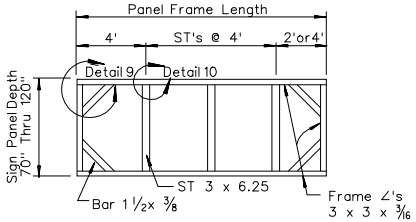

TYPICAL REMOVABLE FRAME
(4' Thru 20')

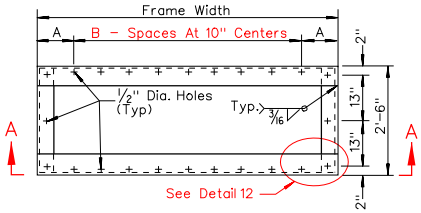

ELEVATION

Sign Panel Mounting Holes (1/2")

Frame Width	A	B
5'-6"	8"	5
7'	7"	7
8'-6"	6"	9

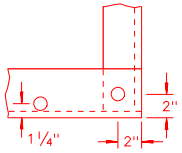

DETAIL 12

NOTES:

1. Frame ∠'s Shall Be 3"x3"x 3/16" ASTM-A36.
2. 1/2" Panel Mounting Holes Shall Be Drilled With Templates.
3. 3/16" Holes For Mounting Sign May Be Slotted 1".
4. Mount Exit Frame At Right Edge of Removable Frame So Front Faces Are Flush.

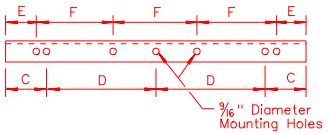

SECTION A-A

Frame Mounting Holes (9/16")

Frame Width	C	D	E	F
5'-6"	9"	2'	—	—
7'	1'-6"	2'	—	—
8'-6"	—	—	1'-3"	2'

1/2" Hex Head Bolt, Nut, (2) Flat Washers, & (2) Lockwashers

TYPICAL EXIT PANEL FRAMES

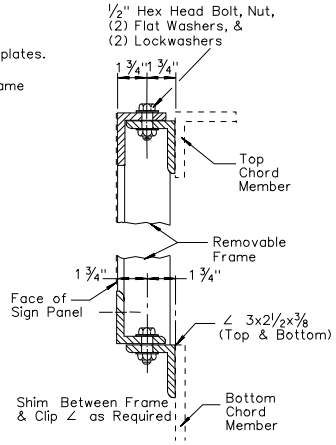

NOTES:

1. FRAMES SHALL BE ALL-WELDED CONSTRUCTION.
2. 1/2" PANEL MOUNTING HOLES SHALL BE DRILLED BY TEMPLATE. SIGN PANEL MAY BE CONSIDERED A TEMPLATE.
3. DRILLED AND TAPPED HOLES (1/4" -20 N.C.) MAY BE USED WHERE INTERFERENCE DUE TO WELDS OR STRUCTURAL MEMBERS IS ENCOUNTERED.
4. ST 3x6.25 FACES SHALL BE FLUSH WITH FACES OF FRAME ANGLES.
5. MOUNTING CLIP ANGLES SHALL BE LOCATED SUCH AS TO ALLOW THE TOP AND BOTTOM FRAME ANGLES OF THE REMOVABLE SIGN PANEL FRAME TO LIE ON A STRAIGHT HORIZONTAL LINE.
6. HOLES FOR MOUNTING REMOVABLE SIGN PANEL FRAME MAY BE SLOTTED 1" MAXIMUM PARALLEL TO THE AXIS OF THE SIGN.
7. ST 3x6.25 MAY BE CRIMPED AT ENDS TO JOIN FRAME ANGLES. FILLET WELD ALL AROUND.
8. FRAMES SHALL BE 2' MINIMUM AND 4' MAXIMUM.

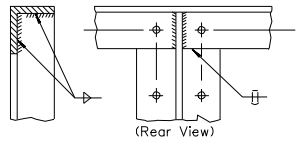

DETAIL 10

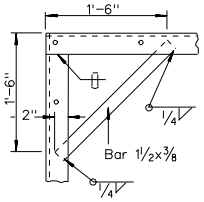

DETAIL 9

TYPICAL JOINT DETAILS

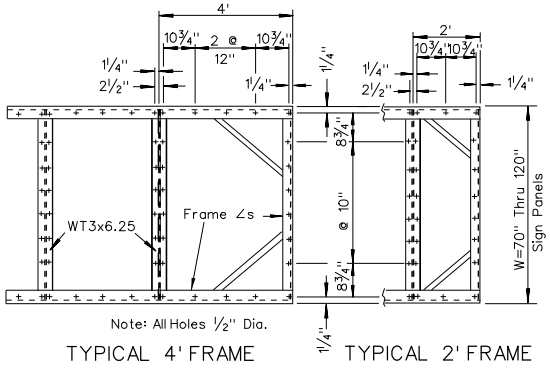

TYPICAL 4' FRAME TYPICAL 2' FRAME

MOUNTING HOLE SPACING FOR SIGN PANEL & FRAME

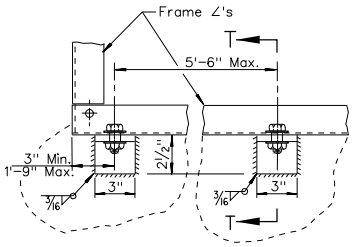

FRAME MOUNTING DETAILS

NOTE:

110" And 120" Sign Panel Frames Will Project Above The Top Chord Of The Truss. In These Cases, The Top Clips Shall Be Bolted To Vertical Frame Members.
SEE SHEET T-36.1.8.1

NEVADA DEPARTMENT OF TRANSPORTATION

OVERHEAD SIGNS
REMOVABLE
SIGN PANEL FRAMES

Signed Original On File	T-36.1.8	(627)
CHIEF BRIDGE ENGINEER	ADOPTED 7/96	REVISION 1/09

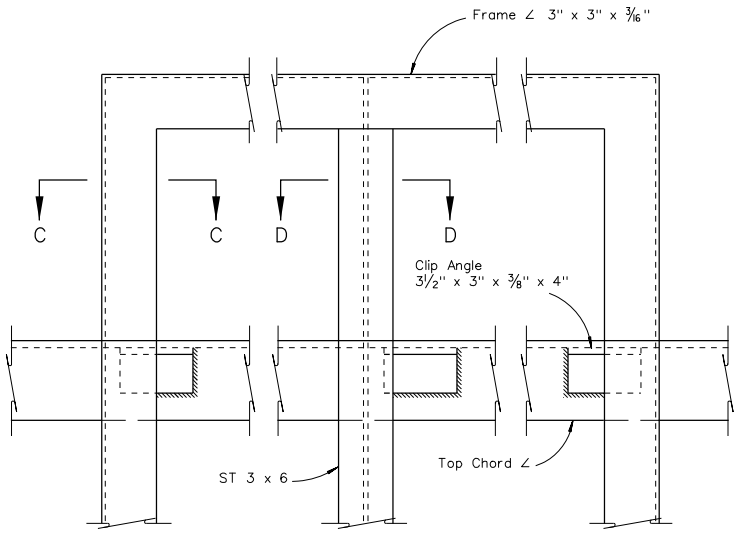

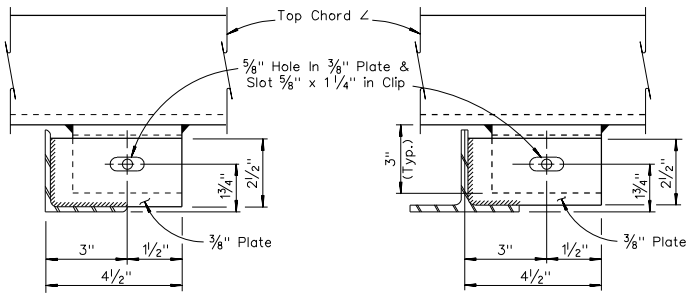

SECTION C–C

SECTION D–D

ALTERNATIVE CONNECTIONS AT TOP CHORD

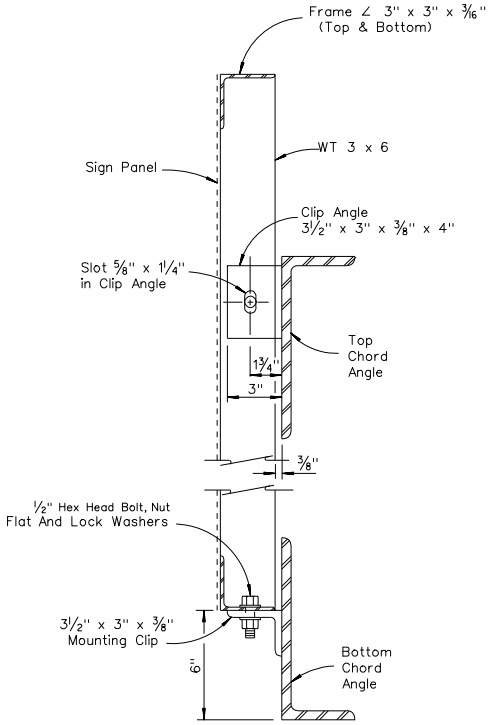

SECTION B–B

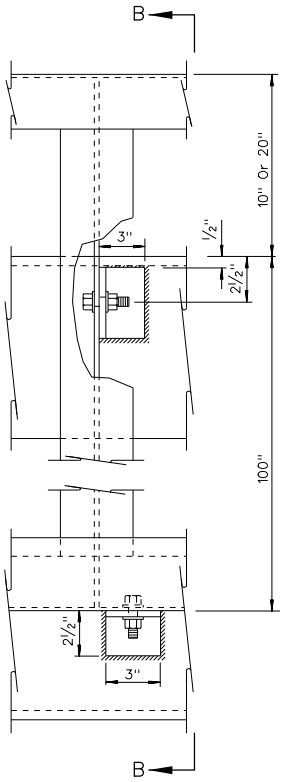

ELEVATION VIEW

STEEL REMOVABLE SIGN PANEL FRAMES

NOTES:

1. FOR STEEL REMOVABLE SIGN PANEL FRAME DETAILS, SEE STANDARD PLAN T-36.1.8.
2. MINIMUM FILLET WELD IS 1/4" FOR CLIP ANGLES WELDED TO CHORD MEMBER OF TRUSS.
3. MAXIMUM SPACING OF BOTTOM CLIP ANGLE IS 5'-6".
4. TOP CLIP REQUIRED FOR EACH VERTICAL MEMBER OR REMOVABLE SIGN PANEL FRAME.

NEVADA DEPARTMENT OF TRANSPORTATION

OVERHEAD SIGNS
REMOVABLE
SIGN PANEL FRAMES
110' AND 120" SIGN PANELS

Signed Original On File	T-36.1.8.1	(627)
CHIEF BRIDGE ENGINEER	ADOPTED 7/96	REVISION 10/02

NOTES:

1. SIGN STRUTS SHALL BE INSTALLED ALONG EACH OF THE REMOVABLE SIGN FRAMES VERTICAL MEMBERS. ALL NEW ANGLES AND W-SHAPES SHALL CONFORM TO ASTM A-36. SIGN STRUTS MAY BE CUT TO LENGTH ON SITE. SIGN STRUTS, MOUNTING CLIPS AND ALL MOUNTING HARDWARE SHALL BE HOT DIP GALVANIZED AFTER FABRICATION. TOUCH UP ALL FIELD CUTS WITH A ZINC RICH PAINT.
2. SIGN PANEL MAY BE ADJUSTED HORIZONTALLY TO AVOID EXISTING MOUNTING BRACKETS. IF EXISTING MOUNTING BRACKETS NEED TO BE REMOVED USE CARE DURING CUTTING OPERATION. DO NOT GOUGE EXISTING CORD ANGLES, GRIND WELD AREAS SMOOTH, TOUCH UP GRIND AREA WITH A ZINC RICH PAINT.
3. DISCARD ALL EXISTING 1/2" BOLTS, NUTS AND WASHERS.
4. ALL HOLES TO BE 9/16" IN DIAMETER UNLESS OTHERWISE NOTED. ALL NEW BOLTS SHALL BE A 1/2" DIA. HEX BOLT HEAD WITH NUT, FLAT WASHER AND LOCKING WASHER. ALL BOLTS TO BE GALVANIZED PER ASTM A153.
5. THE COST OF REMOVING EXISTING PANEL, MANUFACTURING SIGN STRUTS, MOUNTING BRACKETS, MOUNTING HARDWARE, REINSTALLATION OF THE EXISTING AND/OR NEW SIGN PANEL AND ANY OTHER RELATED WORK IN RELOCATING THE EXISTING SIGN PANEL SHALL BE INCLUDED IN THE BID ITEM 627 0022 "PERMANENT OVERHEAD SIGN PANEL, RECONSTRUCT", EACH.
6. REMOVE EXISTING LIGHT FIXTURES. TO BE PAID FOR UNDER BID ITEM 202 0318 "REMOVE LIGHTING FIXTURE", EACH. ANY ADDITIONAL CONDUIT AND/OR CONDUCTOR NEEDED TO INSTALL LIGHT FIXTURES, TO BE PAID FOR UNDER BID ITEM 623 0144 "SODIUM VAPOR LUMINAIRE, 150 WATT", EACH.
7. INSTALL NEW 150 WATT HIGH PRESSURE SODIUM VAPOR SIGN LIGHTING FIXTURES, USE HOLOPHANE "PANL15AHP*24DG" OR AN APPROVED EQUAL. ITEM INCLUDES COST OF ANY ADDITIONAL CONDUIT AND/OR CONDUCTOR NEEDED TO INSTALL LIGHT FIXTURES, TO BE PAID FOR UNDER BID ITEM 623 0144 "SODIUM VAPOR LUMINAIRE, 150 WATT", EACH.
8. WALKWAY GRATING AND SAFETY RAILING TO BE REMOVED IF LUMINAIRE RETRIEVAL SYSTEM IS TO BE INSTALLED.

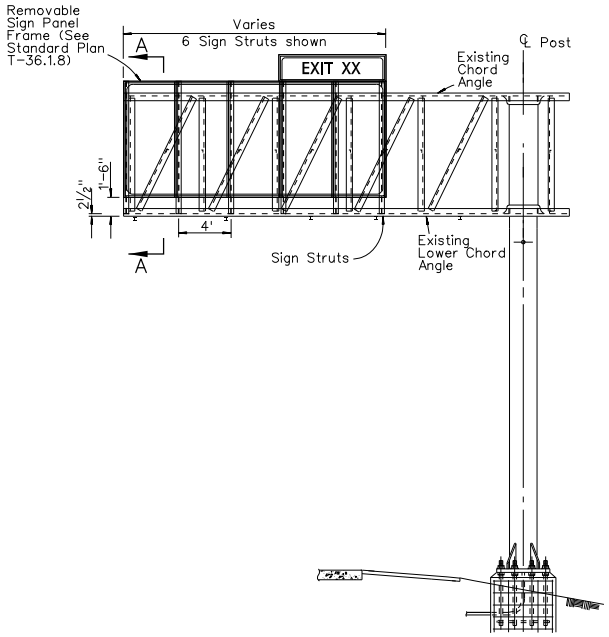

ELEVATION

PROCEDURE:

1) FIELD MEASURE EXISTING SIGN H = HEIGHT.
2) CUT W 6"x 3/4" TO LENGTH NEEDED, GENERALLY (H + 1'-4").
3) REMOVE EXISTING SIGN PANEL. DISCARD EXISTING 1/2" BOLTS.
4) INSTALL NEW SIGN STRUTS AND MOUNTING BRACKETS.
5) REINSTALL EXISTING SIGN PANEL.
6) REMOVE AND DISCARD EXISTING SIGN LIGHTING FIXTURE WHEN NOTED.
7) INSTALL NEW SIGN LIGHTING FIXTURES AND LUMINAIRE RETRIEVAL SYSTEM AS NOTED IN PLANS.

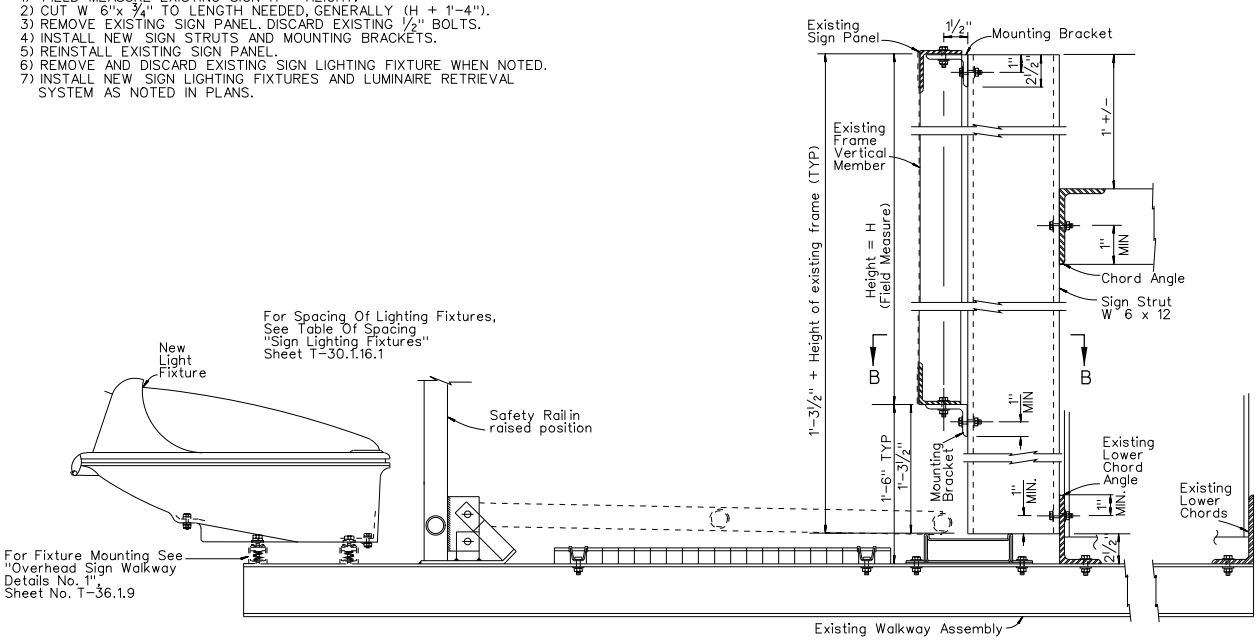

WALKWAY ASSEMBLY AND SIGN STRUT
SECTION A-A

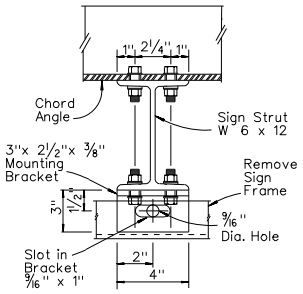

SECTION B-B

NEVADA DEPARTMENT OF TRANSPORTATION

OVERHEAD SIGNS
SIGN EXTENSION BRACKET
RETROFIT METHOD A

Signed Original On File	T-36.1.8.2	(627)
CHIEF BRIDGE ENGINEER	ADOPTED 9/00	REVISION 1/09

NOTES:

1. ENSURE VERTICAL CLEARANCE TO MOUNTING HARDWARE IS NOT LESS THAN VERTICAL CLEARANCE TO BRIDGE SOFFIT.
2. DISCARD ALL EXISTING BOLTS, NUTS, AND WASHERS.
3. USE ALL NEW BOLTS, FLAT AND LOCKING WASHERS, AND NUTS.
4. ALL BOLTS TO BE GALVANIZED PER ASTM A153.
5. COST OF REMOVING EXISTING LIGHT FIXTURE MOUNTING CHANNEL (NEW IF REQUIRED) AND REINSTALLING IT SHALL BE INCLUDED IN THE COST OF THE NEW LIGHT FIXTURE (NO ADDITIONAL PAYMENT).
6. REMOVE EXISTING LIGHT FIXTURES. TO BE PAID FOR UNDER BID ITEM 202 0318 "REMOVE LIGHTING FIXTURE", EACH.
7. INSTALL NEW 150 WATT HIGH PRESSURE SODIUM VAPOR SIGN LIGHTING FIXTURES. ITEM INCLUDES COST OF ANY ADDITIONAL CONDUIT AND/OR CONDUCTOR NEEDED TO INSTALL LIGHT FIXTURES. TO BE PAID FOR UNDER BID ITEM 623 0144 "SODIUM VAPOR LUMINAIRE, 150 WATT", EACH.
8. ON STRUCTURES WITH EXISTING HIGH PRESSURE SODIUM VAPOR LUMINAIRES, REMOVE AND RESET LIGHTS AS SHOWN. ALL WORK ASSOCIATED WITH REMOVING AND RESETTING LUMINAIRES INCLUDING ANY NEW CONDUIT OR CONDUCTOR SHALL BE PAID FOR UNDER BID ITEM 623 0840, "REMOVE AND RESET LUMINAIRE", EACH.

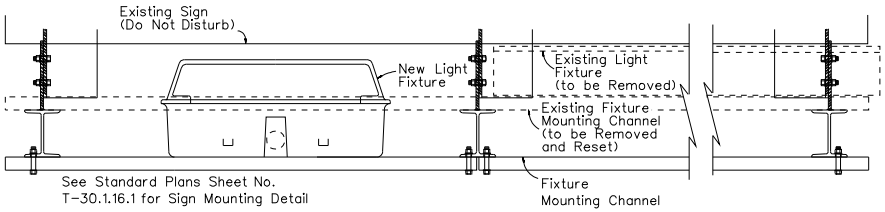

FRONT VIEW

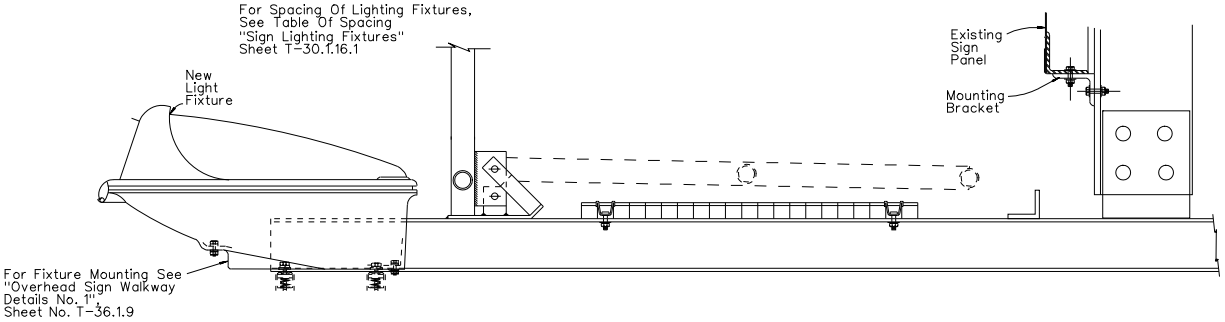

METHOD B
TYPICAL BRIDGE MOUNTED SIGN

NEVADA DEPARTMENT OF TRANSPORTATION

OVERHEAD SIGNS
SIGN EXTENSION BRACKET
RETROFIT METHOD B

Signed Original On File	T-36.1.8.3	(627)
CHIEF BRIDGE ENGINEER	ADOPTED 9/00	REVISION 1/09

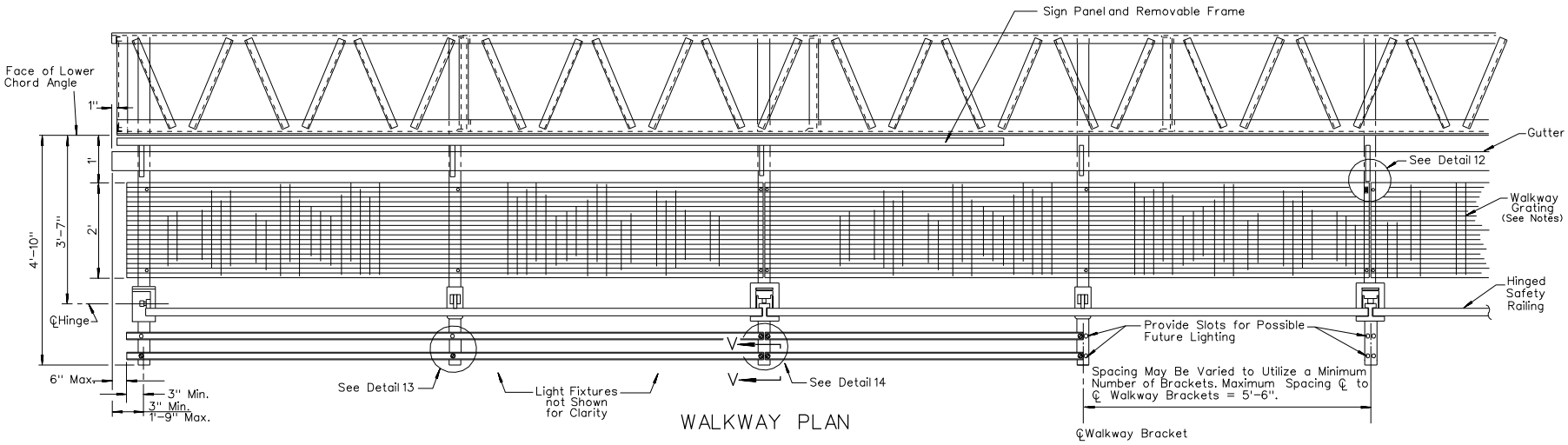

WALKWAY PLAN

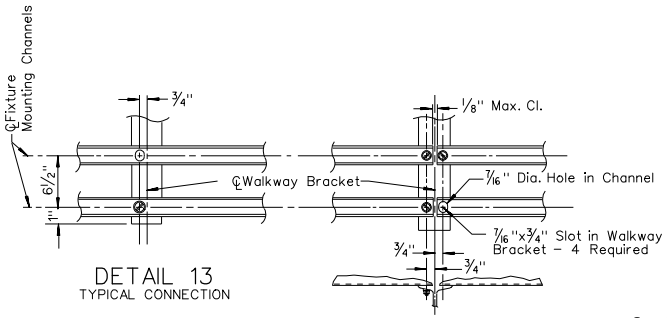

DETAIL 13
TYPICAL CONNECTION

DETAIL 14
CONNECTION AT SPLICE

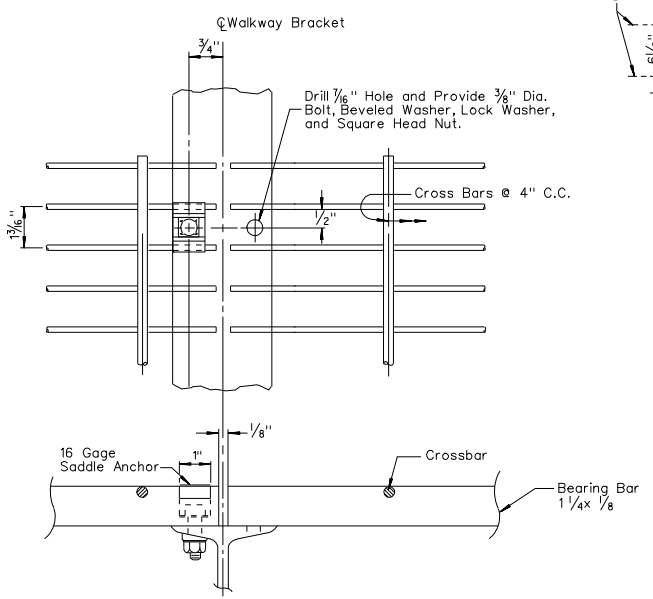

DETAIL 12

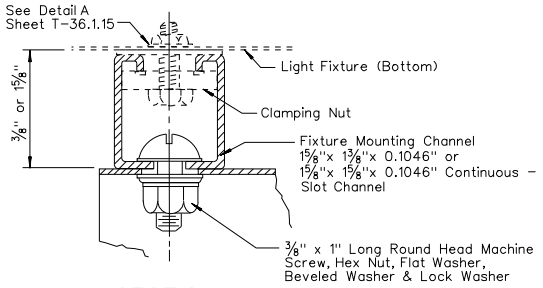

SECTION V-V

NOTES:

1. WELDED-TYPE GRATING SHALL HAVE 1 1/4"x1/8" BEARING BARS @ 1 3/16" CENTERS WITH 1/4" DIAMETER (OR EQUAL) CROSS BARS @ 4" CENTERS, SEE DETAIL 12. IF MECHANICAL LOCK GRATING IS USED IT SHALL BE EQUAL IN STRENGTH TO THE WELDED-TYPE. ALTERNATE HOLD DOWN CLIPS MAY BE SUBMITTED FOR APPROVAL.

2. FOR SPACING OF LIGHTING FIXTURES SEE TABLE OF SPACINGS ON "SIGN LIGHTING FIXTURES" SHEET T-30.1.16.1.

3. WALKWAY GRATING AND LIGHT FIXTURE MOUNTING CHANNELS TO BE CONTINUOUS (NO SPLICES) OVER AS MANY WALKWAY BRACKETS AS PRACTICABLE CONSISTENT WITH FABRICATION, EASE OF HANDLING AND ASSEMBLING. SEE CONTRACT PLANS TO DETERMINE IF WALKWAY GRATING AND SAFETY RAILING IS REQUIRED.

4. BOLTS, NUTS, WASHERS, ETC. TO BE GALVANIZED.

NEVADA DEPARTMENT OF TRANSPORTATION

OVERHEAD SIGNS
WALKWAY DETAILS NO. 1

Signed Original On File	T-36.1.9		(627)
CHIEF BRIDGE ENGINEER	ADOPTED 11/95	REVISION 10/02	

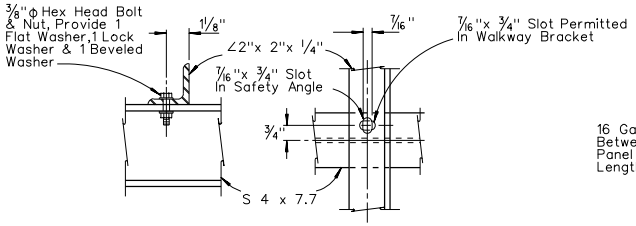

SAFETY ANGLE DETAILS

NOTE: On Structure Mounted Signs Replace Gutter With a ∠2"x 2"x 1/4" Positioned With Gage Line 7" Line 7" From Mounting Bracket ∠5"x 3"x 1/4".

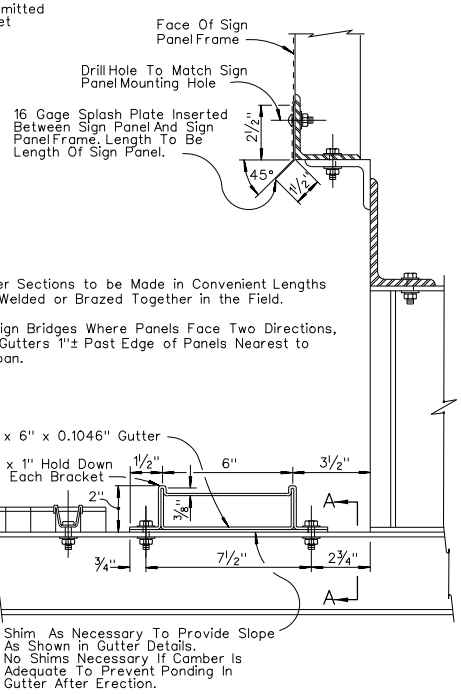

TYPICAL GUTTER SECTION

NOTE:
1. Gutter Sections to be Made in Convenient Lengths and Welded or Brazed Together in the Field.
2. On Sign Bridges Where Panels Face Two Directions, End Gutters 1"± Past Edge of Panels Nearest to ℄ Span.

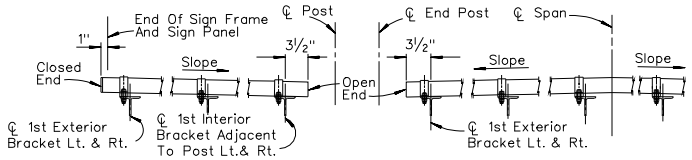

SINGLE SIGN POST

SIGN BRIDGE

GUTTER DETAILS

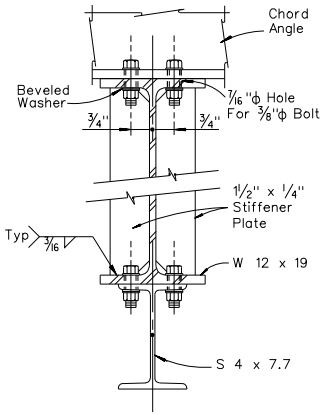

SECTION B-B

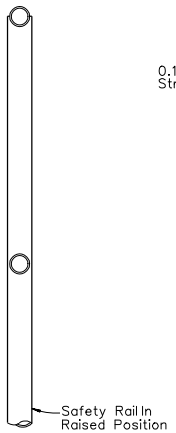

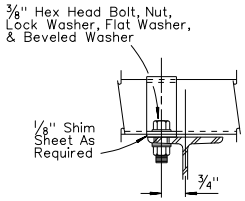

SECTION A-A

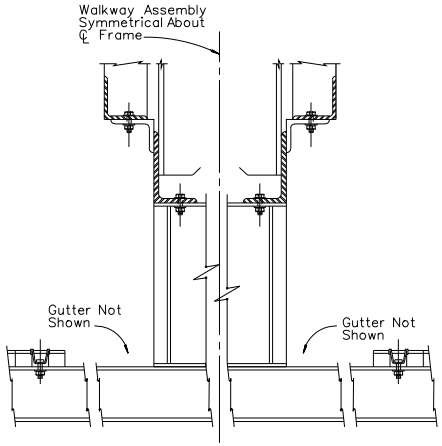

FOR DOUBLE-FACED SIGN FRAMES

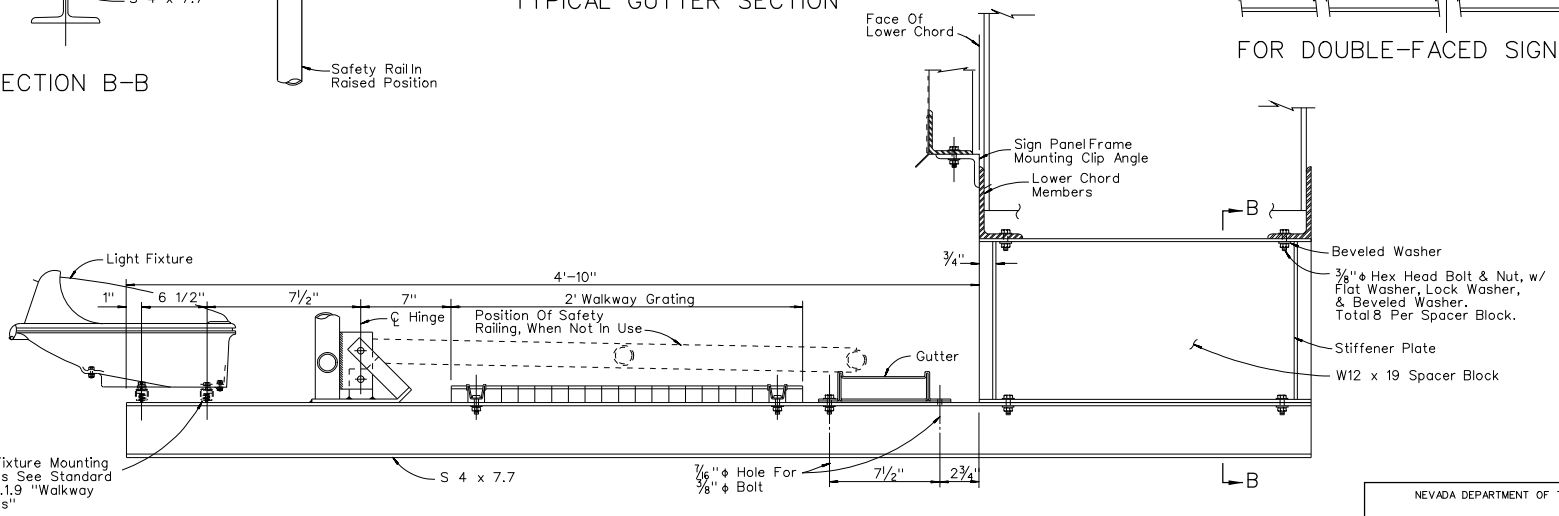

WALKWAY ASSEMBLY

NOTE: See Contract Plans to determine if fixed lighting, safety rail and walkway grating or luminaire retrieval system is required.

NEVADA DEPARTMENT OF TRANSPORTATION

OVERGEAD SIGNS
WALKWAY DETAILS NO. 2

Signed Original On File	T-36.1.10	(627)
CHIEF BRIDGE ENGINEER	ADOPTED 7/96	REVISION 3/04

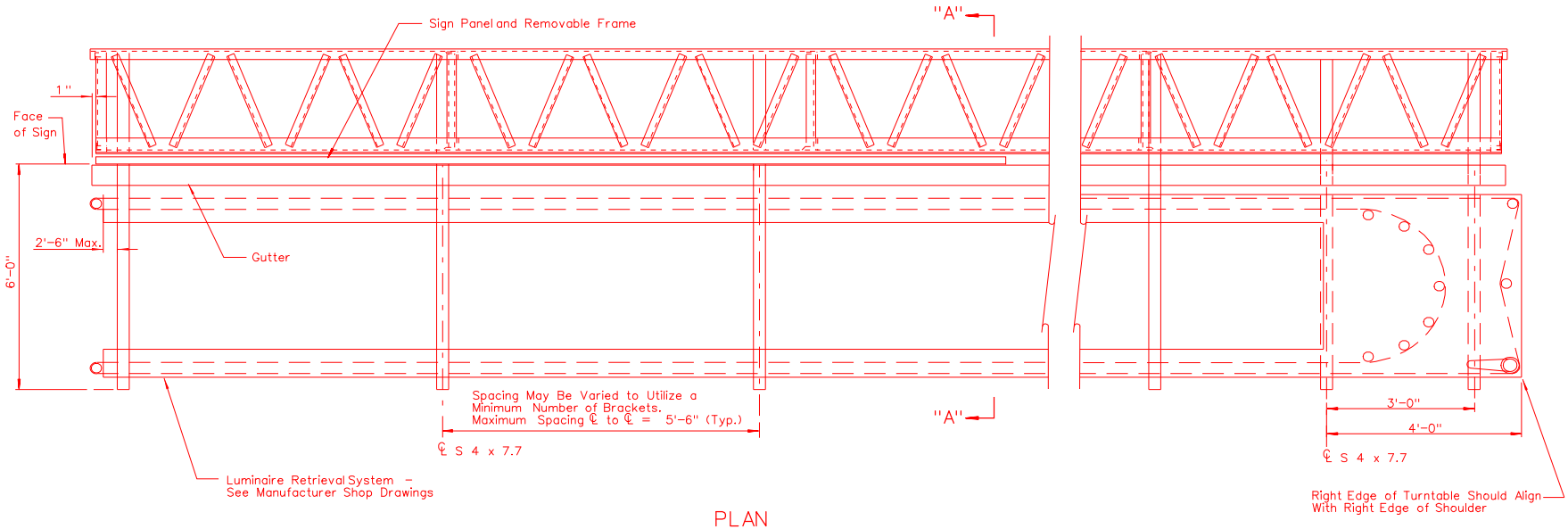

PLAN

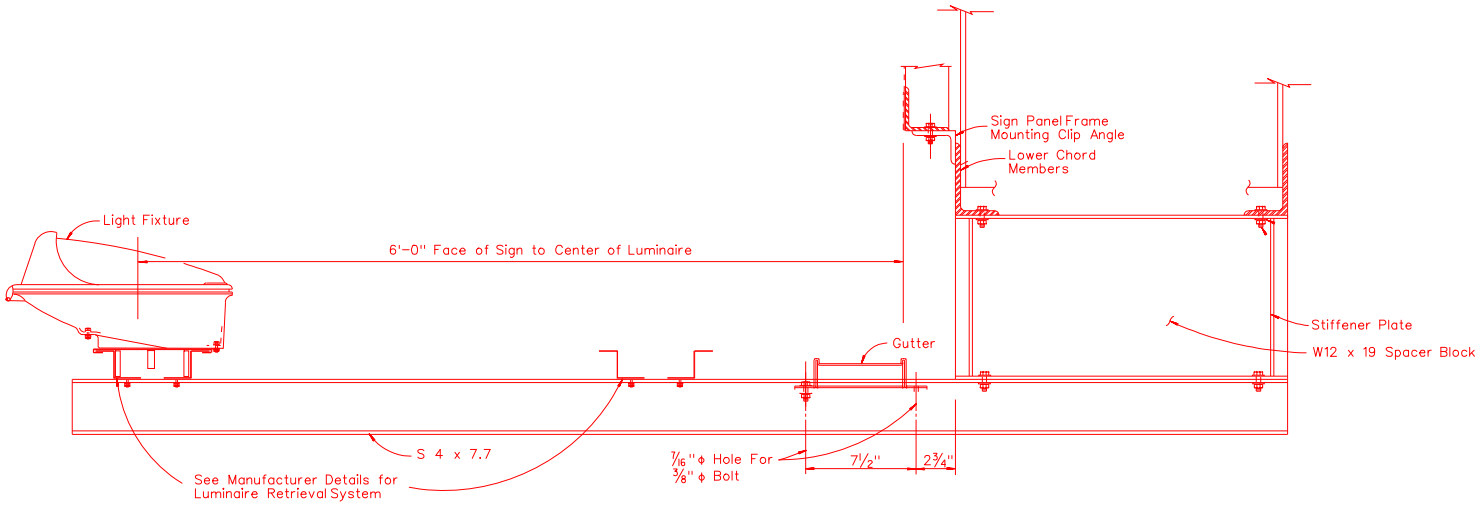

SECTION A-A

NEVADA DEPARTMENT OF TRANSPORTATION

OVERHEAD SIGNS
LUMINAIRE RETRIEVAL
SYSTEM
MOUNTING DETAIL

Signed Original On File	T-36.1.10.1	(627)
CHIEF BRIDGE ENGINEER	ADOPTED 1/09	REVISION

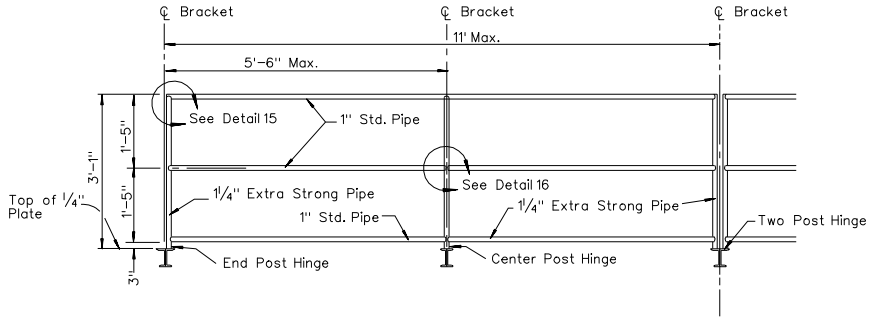

ELEVATION

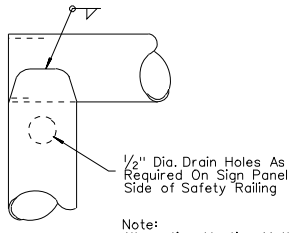

DETAIL 15

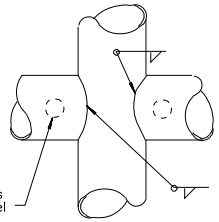

Note:
Alternative Venting Methods May Be Used If Approved by The Engineer.

DETAIL 16

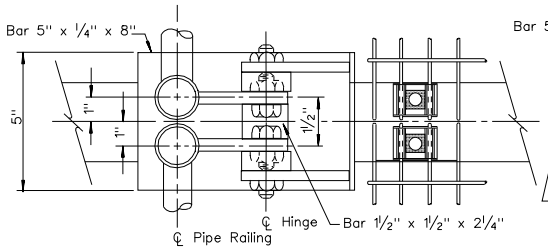

PLAN VIEW - TWO POST HINGE

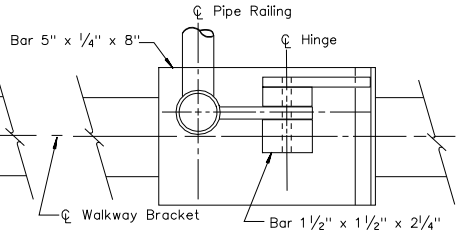

PLAN VIEW - END POST HINGE

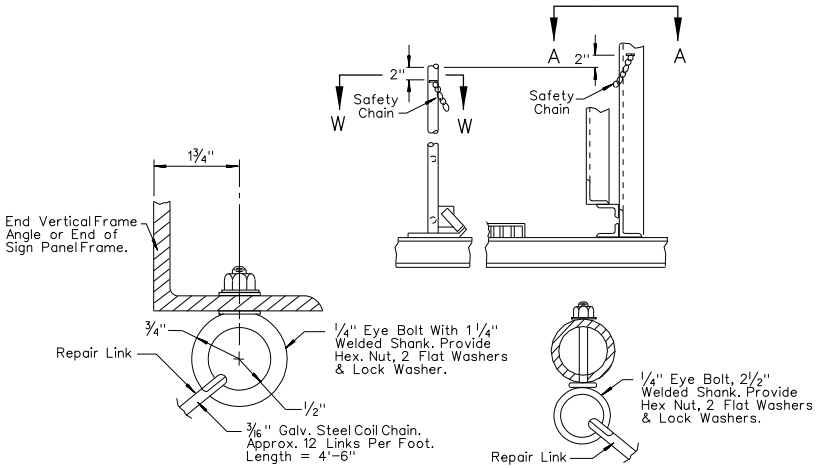

SECTION A-A

SECTION W-W

CHAIN ASSEMBLY

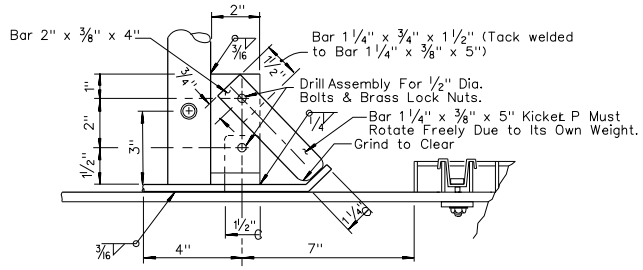

ELEVATION

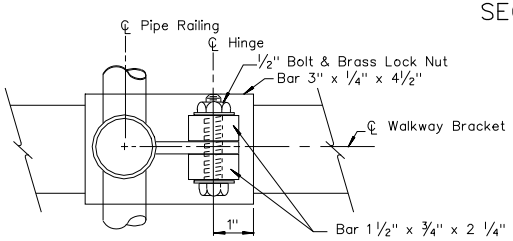

PLAN VIEW - CENTER POST HINGE

NOTES:

1. SPECIAL CARE SHALL BE TAKEN TO INSURE THAT THE COMPLETED HINGE AND LATCH ASSEMBLY WILL HOLD THE SAFETY RAILING IN A STEADY MANNER, FREE OF WOBBLE WHILE IN THE RAISED POSITION. MAXIMUM ALLOWABLE DISPLACEMENT FROM VERTICAL AT TOP OF RAILING WHEN LATCHED SHALL BE 1".
2. DETAILS FOR BOLTING HINGE BASE ℄ TO WALKWAY BRACKET MAY BE SUBMITTED FOR APPROVAL.
3. ALTERNATIVE DETAILS APPROVED BY THE ENGINEER MAY BE SUBSTITUTED FOR THE SAFETY CHAIN CONNECTIONS SHOWN.

NEVADA DEPARTMENT OF TRANSPORTATION

OVERHEAD SIGNS
WALKWAY SAFETY RAILING
DETAILS

Signed Original On File	T-36.1.11	(627)
CHIEF BRIDGE ENGINEER	ADOPTED 11/95	REVISION 12/02

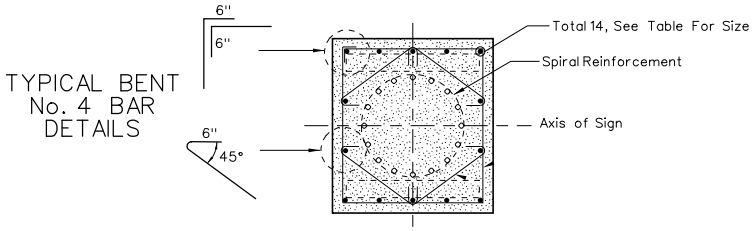

SECTION B-B

POST TYPE	ANCHOR BOLTS	PEDESTAL SIZE	REINFORCING STEEL VERTICAL	STANDARD (SEE NOTE 8) PILE DIAMETER	STANDARD (SEE NOTE 8) FOUNDATION DEPTH	SPECIAL (SEE NOTE 8) PILE DIAMETER	SPECIAL (SEE NOTE 8) FOUNDATION DEPTH
II	6 – 2"	2'-11" x 2'-10"	14 – #7	30"	14'	–	–
III	6 – 2"	3' – 2" x 2'-10"	14 – #8	30"	14'	–	–
IV	6 – 2"	3'-8" x 3'-4"	16 – #8	36"	14'	–	–
V	10 – 2"	3'-10" x 3'-7"	16 – #9	36"	17'	–	–
VI	10 – 2"	3'-10" x 3'-7"	16 – #10	36"	18'	36'	21'
VII	12 – 2"	4'-3" x 3'-11"	16 – #11	36"	21'	42"	26'
VIII	12 – 2"	4'-5" x 4'-1"	16 – #11	36"	25'	42"	26'
I-S	6 – 2"	2'-10" x 2'-10"	14 – #7	30"	14'	–	–
II-S	6 – 2"	3'-1" x 2'-10"	14 – #8	30"	16'	–	–
III-S	6 – 2"	3'-4" x 2'-10"	14 – #10	30"	18'	–	–
IV-S	8 – 2"	3'-6" x 3'-4"	16 – #10	36"	19'	–	–
V-S	8 – 2"	3'-9" x 3'-4"	16 – #11	36"	22'	–	–
VI-S	8 – 2"	4'-1" x 3'-4"	16 – #11	36"	23'	–	–
VII-S	8 – 2¼"	4'-5" x 3'-11"	✱24 – #11	36"	25'	–	–
VIII-S	8 – 2½"	5'-0" x 4'-4"	✱24 – #11	42"	32'	–	–

✱ BUNDLED PAIRS

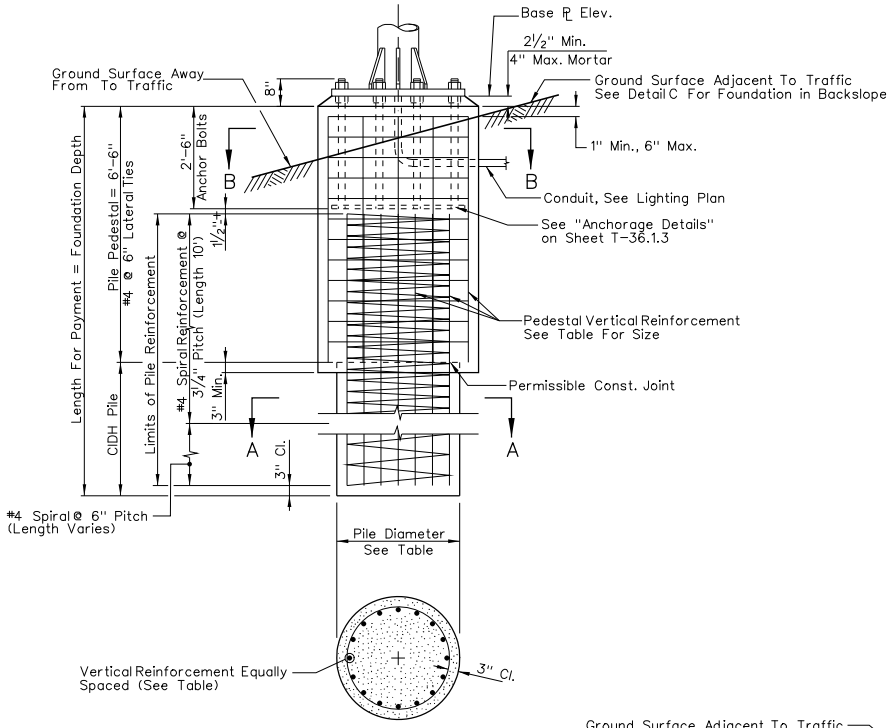

SECTION A-A

NOTES:

1. FOR ANCHOR BOLT LAYOUT SEE POST SHEET T-36.1.3.
2. FOR BASE PLATE ELEVATION, SEE CONTRACT PLANS.
3. PEDESTAL SHALL BE CLASS A OR AA PCC. PILE CONCRETE CLASS D OR DA.
4. LONGER SIDE OF BASE PLATES AND PEDESTALS SHALL BE ORIENTED PERPENDICULAR TO THE SIGN AXIS.
5. PRIOR TO ERECTION OF THE POST, BACKFILL WHICH IS EQUIVALENT TO THE SURROUNDING MATERIAL SHALL BE IN PLACE.
6. PEDESTAL SHALL BE FORMED 6" MINIMUM BELOW GROUND SURFACE. REMAINDER MAY BE PLACED AGAINST UNDISTURBED MATERIAL.
7. SLOPE PROTECTION REQUIRED WHEN INDICATED ON THE CONTRACT PLANS.
8. AN ALLOWABLE SKIN RESISTANCE OF 500 PSF WAS USED IN THE DESIGN OF ALL PILES EXCEPT THOSE FOR POST TYPES VI, VII, AND VIII. THE ALLOWABLE SKIN RESISTANCE (PSF) FOR POST TYPES VI, VII, AND VIII ARE AS FOLLOWS:

POST TYPE	VI	VII	VIII
W/ STANDARD PILE	590	810	700
W/ SPECIAL PILE	500	490	490

GEOTECHNICAL ENGINEER WILL REVIEW SITE CONDITIONS AND DETERMINE IF "STANDARD" OR "SPECIAL" PILES ARE APPROPRIATE FOR POST TYPES VI, VII & VIII. IF "SPECIAL" PILES ARE REQUIRED, THEY WILL BE DESIGNATED AS SUCH ON THE CONTRACT PLANS. UNLESS "SPECIAL" PILES ARE SPECIFIED IN THE PLANS, USE "STANDARD" PILE DIAMETER AND FOUNDATION DEPTH.

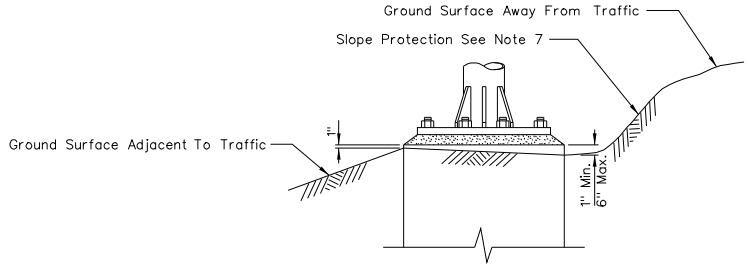

DETAIL C

NEVADA DEPARTMENT OF TRANSPORTATION

OVERHEAD SIGNS
ALTERNATE PILE FOUNDATION

Signed Original On File	T-36.1.12	(627)
CHIEF BRIDGE ENGINEER	ADOPTED 7/96	REVISION 2/05

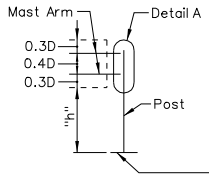

DOUBLE MAST ARM SERIES
TYPE C1

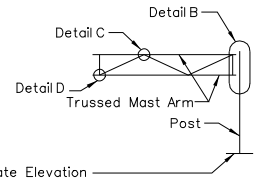

TRUSSED MAST ARM SERIES
TYPE C2

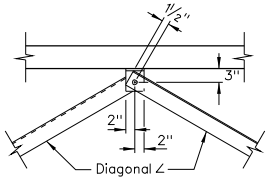

DETAIL C

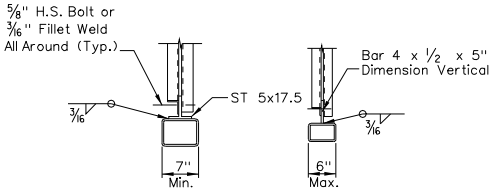

VIEW J-J

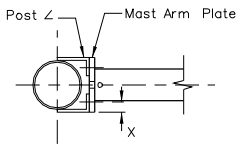

SECTION F-F

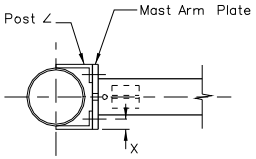

SECTION G-G

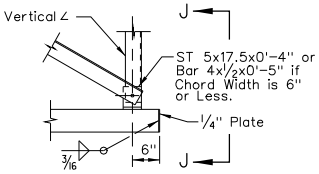

DETAIL D

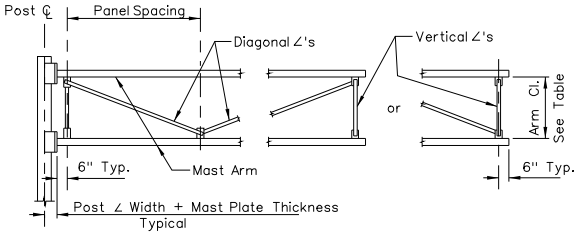

SIGN DEPTH INCHES	ARM CLEARANCE	MAX. PANEL SPACING	VERTICAL ANGLE	DIAGONAL ANGLE
D=40"-70"	2'	4'-4"	∠2X2X1/4	∠2X2X1/4
D=80"-100"	3'	6'-6"	∠3 1/2X2 1/2X1/4 ✳	∠3 1/2X2 1/2X1/4 ✳

✳ Short Leg Outstanding

TRUSS FRAMING DATA

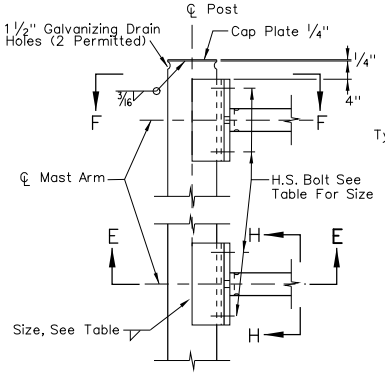

DETAIL A

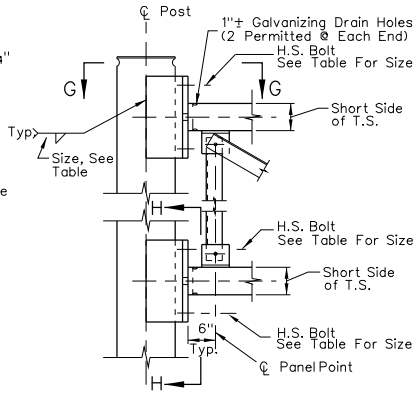

DETAIL B

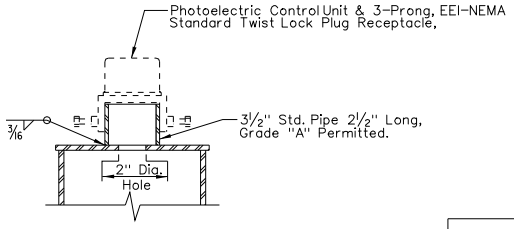

PHOTOELECTRIC CONTROL UNIT

POST ANGLES

POST SIZE	ANGLE	X	WELD
6	∠5X3X1/2	1 3/4"	1/4
8	∠6X4X5/8	2 1/4"	1/4
10	∠7X4X5/8	2 1/4"	1/4
12	∠8X4X3/4	2 1/4"	5/16
14	∠8X4X3/4	2 1/4"	5/16

MAST ARM PLATE

TWO ARMS	TRUSSED ARMS	PLATE	H.S. BOLT
TS 3X3X8.80		3/4"	1/2"
TS 4X4X12.02		1"	5/8"
TS 5X5X15.42		1"	3/4"
TS 6X6X18.82		1"	3/4"
TS 7X7X22.04	TS 5X3X16.84	1 1/4"	3/4"
	TS 6X4X21.94	1 1/4"	7/8"
	TS 7X5X27.04	1 1/4"	7/8"
	TS 8X6X31.73	1 1/4"	7/8"
	TS 10X6X36.83	1 1/4"	1"

POST TO ARM FRAMING DATA

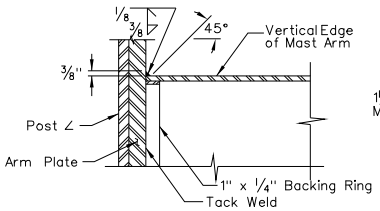

SECTION E-E

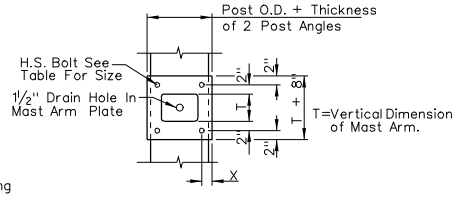

SECTION H-H
Bottom Connection Shown, Top Similar

NOTES:

1. FOR POST CONNECTION TO BASE PLATE SEE T-36.1.16.
2. FOR MAST ARM LENGTH AND MAST ARM TO SIGN PANEL CONNECTIONS SEE T-36.1.14.

FOR GENERAL NOTES SEE T-36.1.16

NEVADA DEPARTMENT OF TRANSPORTATION

OVERHEAD SIGNS
LIGHTWEIGHT
TYPE C
CONNECTION DETAILS

Signed Original On File	T-36.1.13	(627)
CHIEF SAFETY/TRAFFIC ENGR.	ADOPTED 11/95	REVISION 9/97

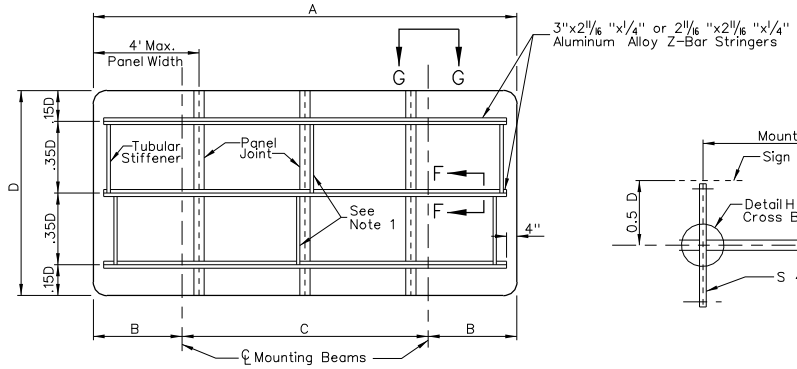

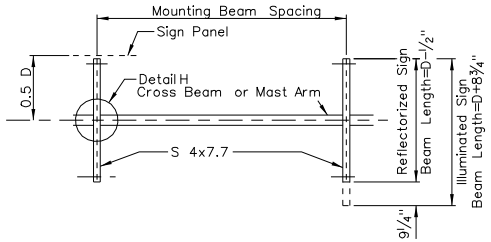

SINGLE BEAM OR ARM SERIES

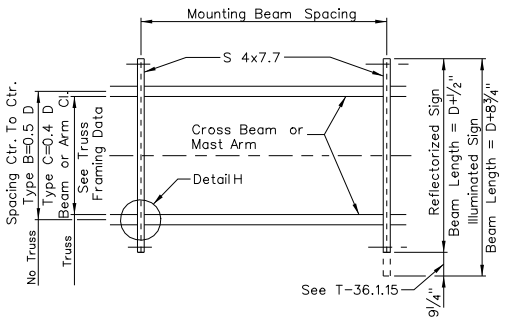

DOUBLE BEAM OR ARM SERIES

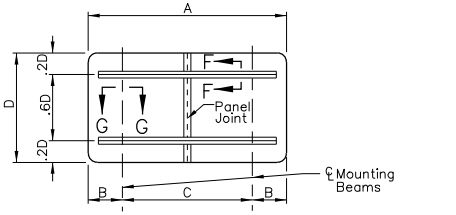

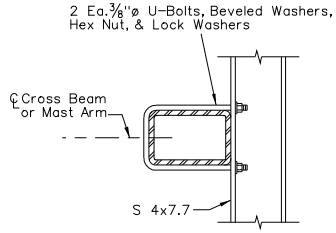

SECTION J-J

SIGN PANEL LENGTH	NUMBER MOUNTING	SIGN PANEL OVERHANG	MOUNTING BEAM SPACING
A	BEAMS	B	C
5'	2	9"	3'-6"
6'	2	12"	4'
7'	2	15"	4'-6"
8'	2	18"	5'
9'	2	21"	5'-6"
10'	2	24"	6'
11'	2	27"	6'-6"
12'	2	30"	7'
13'	2	30"	8'
14'	2	30"	9'
15'	2	36"	9'
16'	2	36"	10' *
17'	2	39"	10'-6" *
18'	2	42"	11' *

* - CENTER MOUNT REQUIRED. DIVIDE "C" SPACING BY 2.

MOUNTING BEAM SPACING

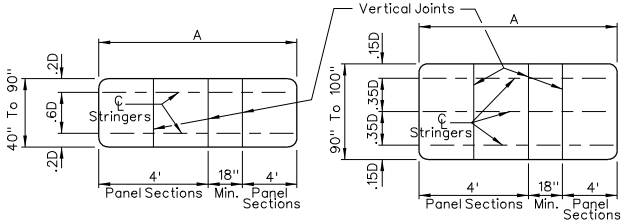

2 STRINGER MOUNTING 3 STRINGER MOUNTING

STRINGER AND PANEL ARRANGEMENT

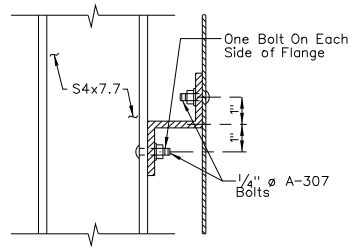

SECTION F-F

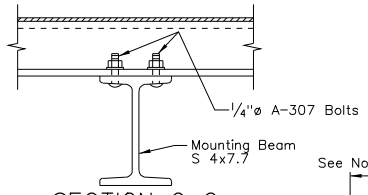

SECTION G-G

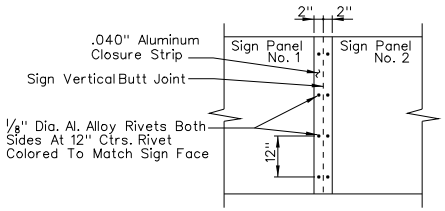

PANEL JOINT CLOSURE STRIP
ALUMINUM SHEET CONSTRUCTION

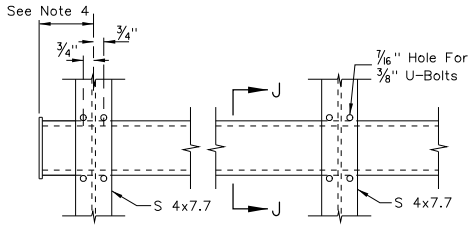

END ARM DETAIL
SINGLE POST SIGNS

DETAIL H

NOTES:

1. TUBULAR STIFFENERS TO BE ADDED WHEN "A" EXCEEDS 10'.
2. POSITION SIGN PANEL SO THAT MOUNTING BEAMS WILL CLEAR TRUSS CONNECTIONS AND ARM TO POST JOINTS. WHERE INTERFERENCE CANNOT BE AVOIDED, 1/2" Ø HOLES TO PASS THE 3/8" Ø U-BOLTS MAY BE DRILLED THROUGH MAST ARM ANGLES OR TRUSS CONNECTION MEMBERS AS NECESSARY.
3. TORQUE ALUMINUM SIGN PANEL MOUNTING BOLT TO 100 IN.-LBS.
4. 11" FOR TYPE C-1 AND C-2, OTHERS 4".
5. FLAT WASHERS REQUIRED ON ALL BOLTS, 1 OR 2 AS NECESSARY.
6. ALL NUTS TO HAVE FIBER INSERTS.
7. TO OBTAIN DESIRED PANEL WIDTH, MAX. OF 2 PANELS MAY BE CUT LESS THAN 4' (18" MIN. EACH).
8. TUBULAR STIFFENERS REQUIRED ONLY WHEN PANEL OVERHANG EXCEEDS 2'.

NEVADA DEPARTMENT OF TRANSPORTATION

OVERHEAD SIGNS
LIGHTWEIGHT SIGN
PANEL MOUNTING DETAILS

Signed Original On File	T-36.1.14	(627)
CHIEF SAFETY/TRAFFIC ENGR.	ADOPTED 11/95	REVISION 9/97

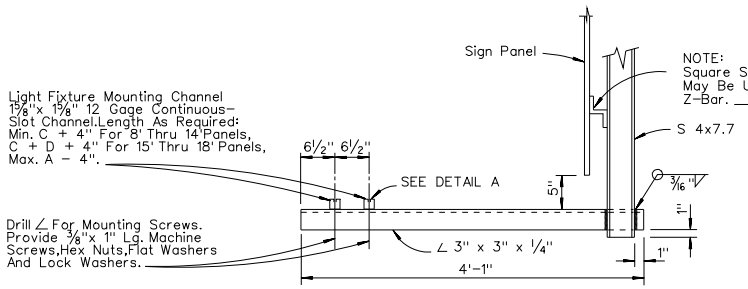

SIDE VIEW - SINGLE FACED SIGN TYPE A

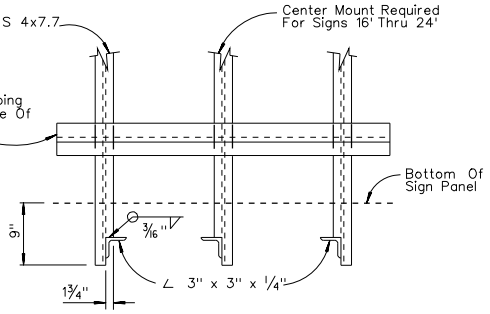

FRONT VIEW

LIGHT FIXTURE MOUNTING DETAIL

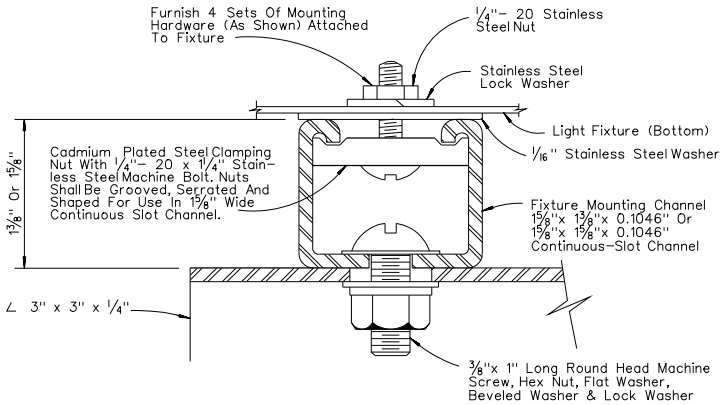

DETAIL A

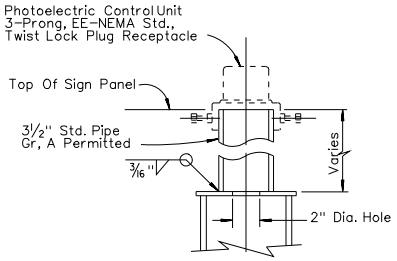

PHOTOELECTRIC
CONTROL UNIT

NEVADA DEPARTMENT OF TRANSPORTATION

OVERHEAD SIGNS
LIGHTWEIGHT
(LIGHT FIXTURE
MOUNTING DETAILS)

Signed Original On File	T-36.1.15		(627)
CHIEF SAFETY/TRAFFIC ENGR.	ADOPTED 7/96	REVISION 3/97	

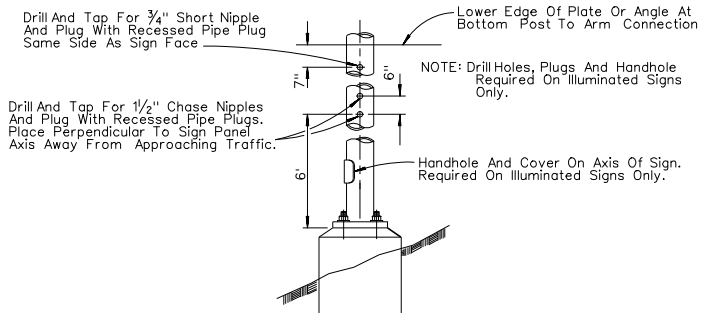

ELEVATION

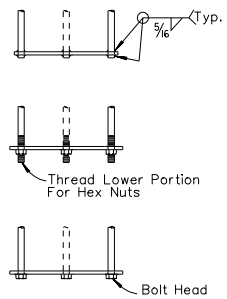

ALTERNATIVE BAR CONNECTIONS

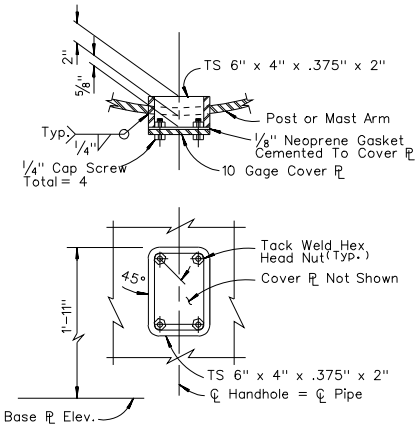

HANDHOLE AND COVER DETAILS

POST SIZE	BASE PLATE	ANCHOR BOLTS (Min.)
6 @ 18.97	1'-2"x 1'-2"x 1 1/2"	4-1 1/4"
6 @ 28.57	1'-2"x 1'-2"x 1 1/2"	4-1 1/2"
8 @ 28.55	1'-6"x 1'-6"x 1 1/2"	4-1 3/4"
8 @ 43.39	1'-6"x 1'-6"x 2"	4-2"
10 @ 54.74	1'-8"x 1'-8"x 2"	4-2 1/4"
12 @ 65.42	1'-8"x 1'-8"x 2"	4-2 1/2"
14 @ 72.09	2'-4"x 2'-4"x 2"	6-2"
14 @ 106.13	2'-4"x 2'-4"x 2"	6-2 1/4"

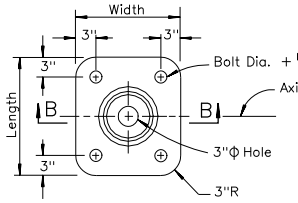

PLAN

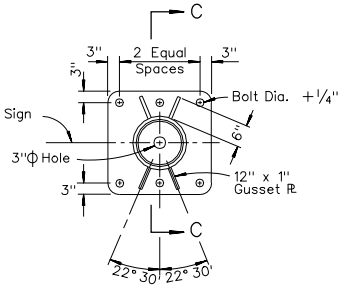

PLAN

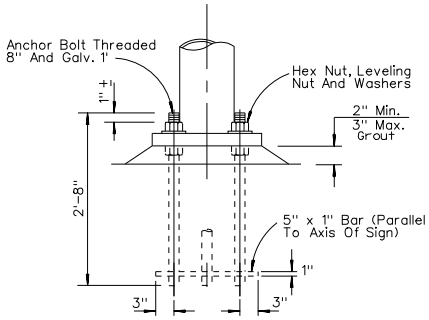

ANCHOR BOLT

NOTES:

1. FOOTINGS SHALL BE PLACED WITH LONG DIMENSIONS NORMAL TO AXIS OF SIGN.
2. ON SINGLE POST SIGNS THE POST SHALL BE RAKED OUT OF PLUMB WITH THE USE OF THE LEVELING NUTS TO MAKE THE BOTTOM OF THE SIGN FRAME LEVEL.
3. 2"Φ ANCHOR BOLTS MAY BE SUBSTITUTED FOR 1 3/4"Φ BOLTS. 2 1/2"Φ ANCHOR BOLTS MAY BE SUBSTITUTED FOR 2 1/4"Φ BOLTS.

SPECIFICATIONS:

DESIGN: AASHTO-SPECIFICATIONS FOR THE DESIGN AND CONSTRUCTION OF STRUCTURAL SUPPORTS FOR HIGHWAY SIGNS, LUMINAIRES AND TRAFFIC SIGNALS, DATED 1975, REVISED 1979.

CONSTRUCTION: STANDARD SPECIFICATIONS FOR ROAD AND BRIDGE CONSTRUCTION, CURRENT EDITION AND SUPPLEMENTS THERE TO.

WELDING: ALL WELDING CONTINUOUS UNLESS OTHERWISE NOTED ON THE PLANS. ALL WELDING TO BE DONE IN ACCORDANCE WITH THE STANDARD SPECIFICATIONS.

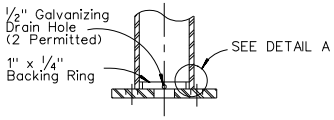

SECTION B-B
6" THRU 12" POST

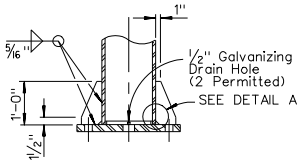

SECTION C-C
14" POST

BASE PLATE DETAILS

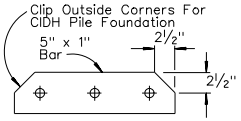

BAR PLAN

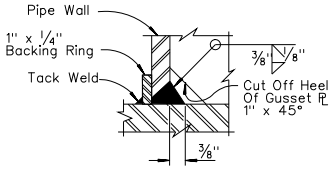

DETAIL A

ANCHORAGE DETAILS

NEVADA DEPARTMENT OF TRANSPORTATION

OVERHEAD SIGNS
LIGHTWEIGHT
POST DETAILS

Signed Original On File	T-36.1.16	(627)
CHIEF SAFETY/TRAFFIC ENGR.	ADOPTED 11/95	REVISION 3/97

Post Size	PILE FOUNDATION				SPREAD FOOTING				
	Pedestal	Pile Dia.	Fdn. Depth	Reinf. Size	Pedestal	Footing	Reinf. Top	Reinf. Bot.	Reinf. ⌋Bar
6 @ 18.97		24"	8'	#5	1'-10"x 1'-10"	4'x 6'	#4	#4	#5
6 @ 28.57		24"	9'	#5	1'-10"x 1'-10"	4'x 7'	#4	#4	#5
8 @ 28.55		30"	9'	#6	2'-2"x 2'-2"	5'x 8'	#4	#4	#5
8 @ 43.39		30"	11'	#7	2'-2"x 2'-2"	6'x 9'	#4	#5	#5
10 @ 54.74	2'-10"x 2'-10"	30"	13'	#8	2'-4"x 2'-4"	7'x 10'	#5	#7	#7
12 @ 65.42	2'-10"x 2'-10"	30"	15'	#10	2'-4"x 2'-4"	7'x 12'	#6	#8	#8
14 @ 72.09	3'-4"x 3'-4"	36"	15'	#10	2'-11"x 2'-11"	7'x 13'	#7	#9	#8
14 @ 106.13	3'-4"x 3'-4"	36"	16'	#10	2'-11"x 2'-11"	8'x 14'	#7	#9	#8

NOTES:

1. BACKFILL SHALL BE IN PLACE PRIOR TO ERECTION OF POST.
2. SLOPE PROTECTION REQUIRED WHEN INDICATED ON THE PLANS.
3. PILE PEDESTAL SHALL BE FORMED 6" MINIMUM BELOW GROUND SURFACE, REMAINDER SHALL BE PLACED AGAINST UNDISTURBED MATERIAL.

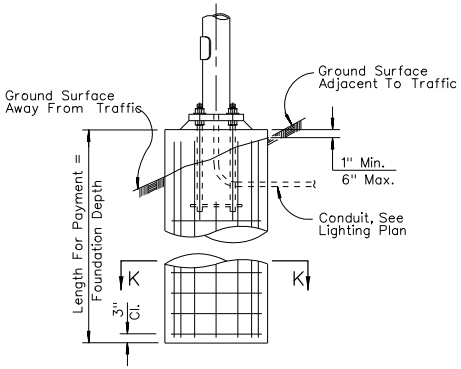

ELEVATION

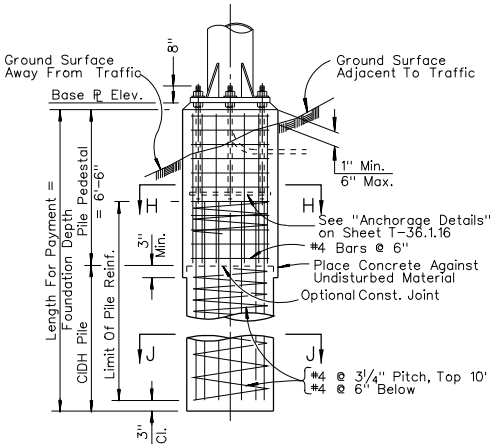

ELEVATION

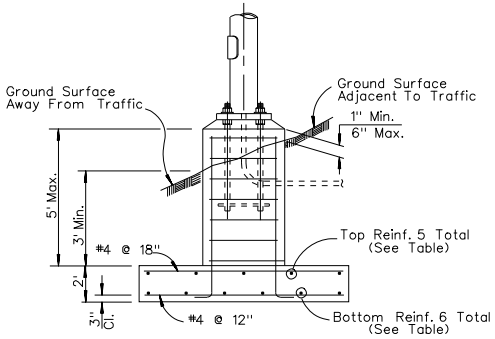

ELEVATION

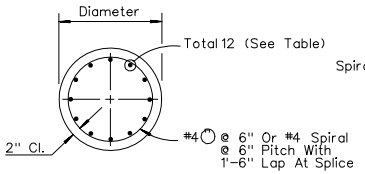

SECTION K-K

6" AND 8" POSTS

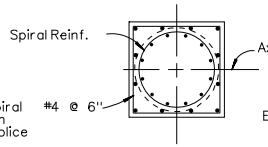

SECTION H-H

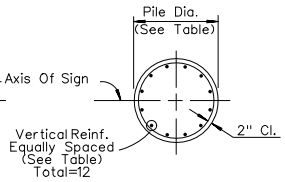

SECTION J-J

10" THRU 14" POSTS

PILE FOUNDATION

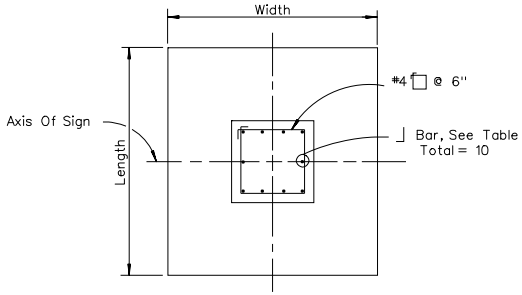

PLAN

SPREAD FOOTING

NEVADA DEPARTMENT OF TRANSPORTATION

OVERHEAD SIGNS
LIGHTWEIGHT
FOUNDATION

Signed Original On File	T-36.1.17	(627)
CHIEF SAFETY/TRAFFIC ENGR.	ADOPTED 11/95	REVISION 9/97

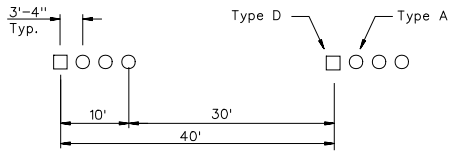

BROKEN YELLOW LINE

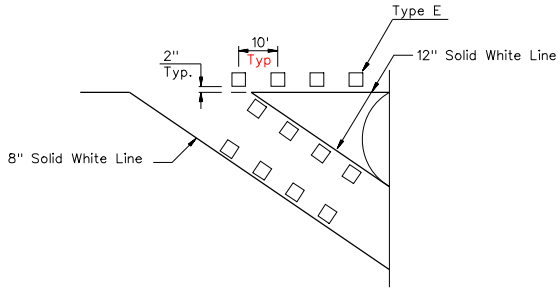

EXIT RAMP (GORE)

RPMs Run Full Length of Gore

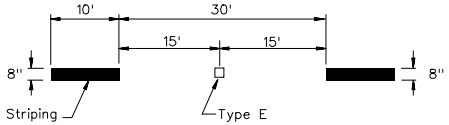

BROKEN WHITE LINE (RURAL)

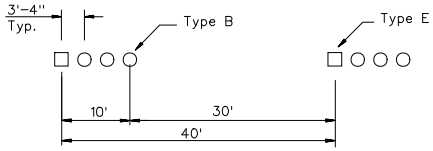

BROKEN WHITE LINE (URBAN)

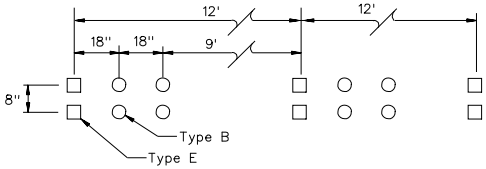

DOTTED WHITE LINE

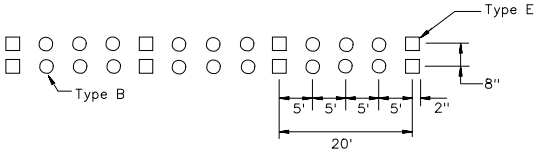

8" SOLID WHITE LINE

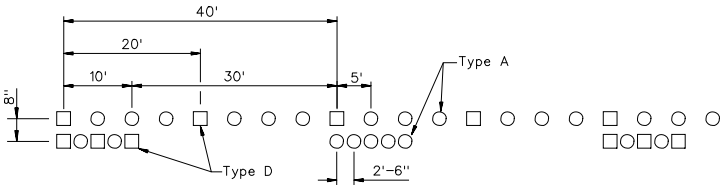

BROKEN YELLOW W/SOLID YELLOW LINE

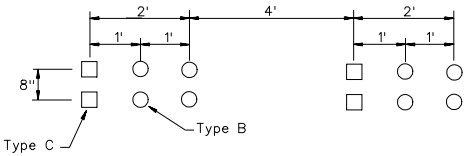

DOTTED WHITE LINE
(CAT TRACKS)

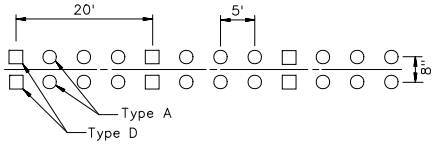

DOUBLE SOLID YELLOW LINE

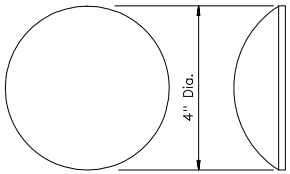

NON-REFLECTIVE MARKER

Type A – Non-Reflective Yellow Marker
Type B – Non-Reflective White Marker

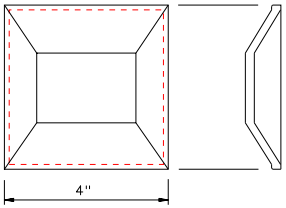

REFLECTIVE MARKER

Type C – One Way Clear Reflective Marker
Type D – Two Way Yellow Reflective Marker
Type E – Red/Clear Reflective Marker – Clear Side Shall Face Oncoming Traffic

NEVADA DEPARTMENT OF TRANSPORTATION

PERMANENT RAISED PAVEMENT MARKERS

Signed Original On File	T-37.1.1	(633)
CHIEF SAFETY/TRAFFIC ENGR.	ADOPTED 2/79	REVISION 5/09

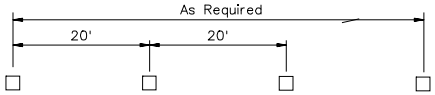

SOLID WHITE LINE OR
SOLID YELLOW LINE

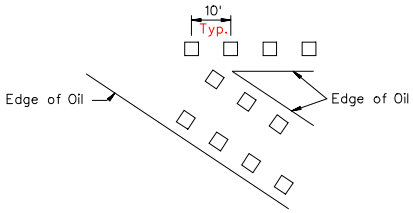

EXIT RAMP (GORE) (WHITE)

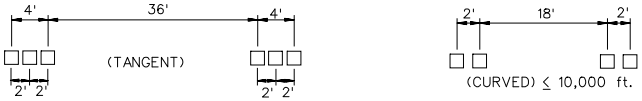

BROKEN YELLOW LINE OR BROKEN WHITE LINE

8" SOLID WHITE LINE

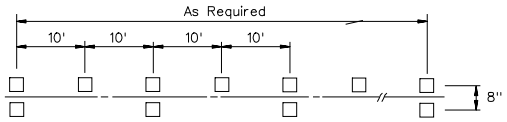

BROKEN YELLOW W/SOLID YELLOW LINE

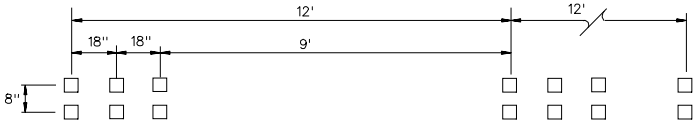

DOTTED WHITE LINE

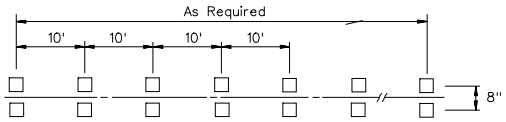

DOUBLE SOLID YELLOW LINE

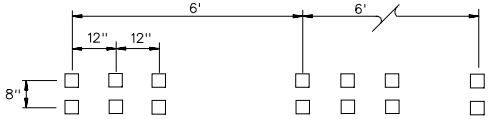

DOTTED WHITE LINE
(CAT TRACKS)

NEVADA DEPARTMENT OF TRANSPORTATION

TEMPORARY LANE
LINE MARKERS

Signed Original On File	T-37.1.2	(634)
CHIEF SAFETY/TRAFFIC ENGR.	ADOPTED 8/98	REVISION 5/09

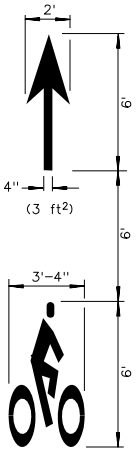

BICYCLE

These Legends As Shown Are For Bike Lane Use

PLACEMENT OF MERGE ARROWS

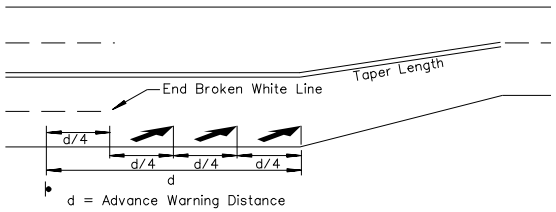

TYPICAL LANE REDUCTION

For Further Details on "LANE REDUCTION"
See Part III of the MUTCD

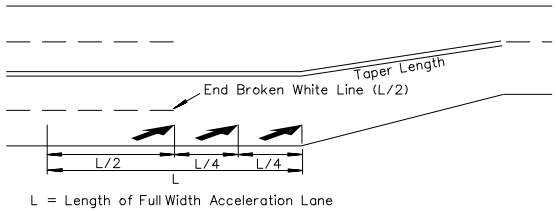

TYPICAL
PARALLEL ACCELERATION LANE

For Further Details on "PARALLEL ACCELERATION LANE"
See Part III of the MUTCD

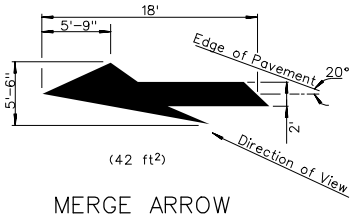

MERGE ARROW

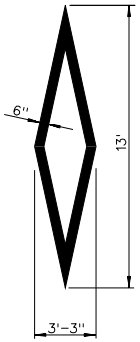

HOV LANE
(12 ft²)

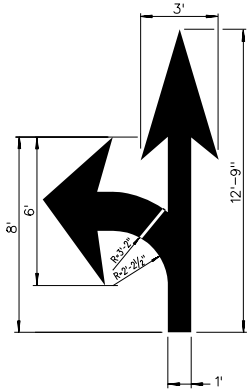

LEFT/STRAIGHT ARROW
(27 ft²)

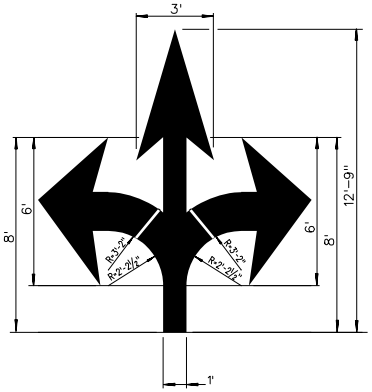

LEFT/STRAIGHT/RIGHT ARROW
(36 ft²)

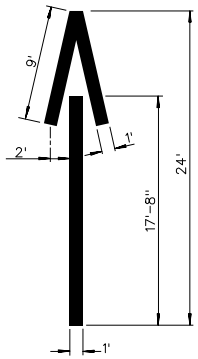

WRONG WAY ARROW
(33 ft²)

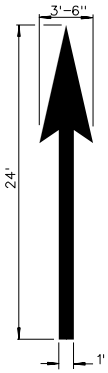

EXIT ARROW
(31 ft²)

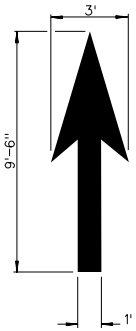

STRAIGHT ARROW
(12.5 ft²)

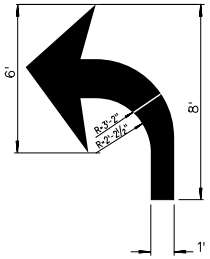

TURN ARROW
(15.5 ft²)

NEVADA DEPARTMENT OF TRANSPORTATION

PERMANENT PAVEMENT MARKINGS
BICYCLE/HOV/ARROWS

Signed Original On File	T-38.1.1		(634)
CHIEF SAFETY/TRAFFIC ENGR.	ADOPTED 7/96	REVISION 7/02	

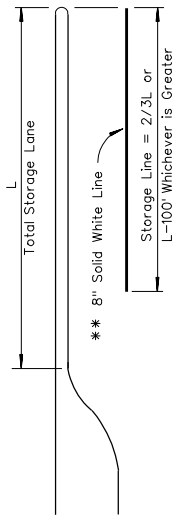

SINGLE STORAGE LANE

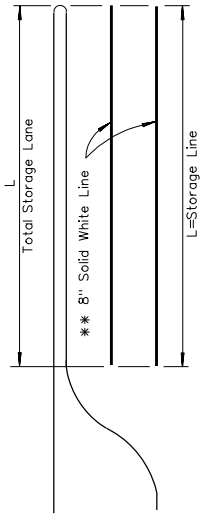

MULTIPLE STORAGE LANES

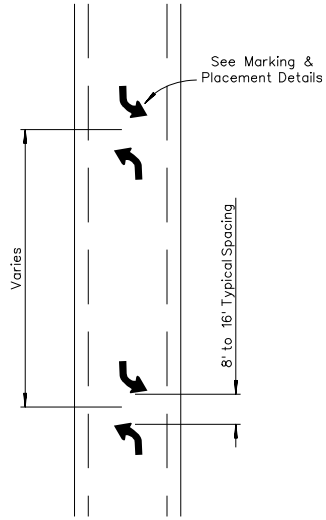

TWO-WAY LEFT TURN LANE

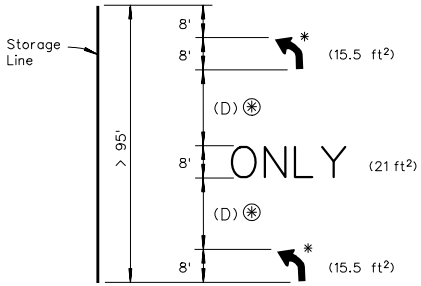

(L > 95 ft)

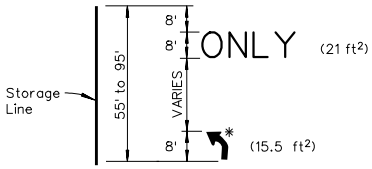

(55 ft < L < 95 ft)

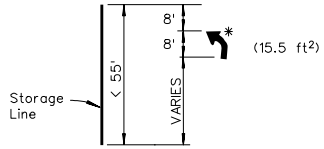

(L < 55 ft)

MARKING & PLACEMENT DETAILS

NOTES:

1. START WITH AN ARROW AT THE ENTRANCE OF THE STORAGE LANE.
2. THE ARROW/ONLY CLOSEST TO CROSSWALK SHALL BE INSTALLED 8 FEET PRIOR TO THE STOP BAR.
3. THE STORAGE LINE IS EQUAL TO THE STORAGE LENGTH PLUS THE DECELERATION LENGTH.
4. WHEN CALCULATING DISTANCE BETWEEN MARKINGS, ROUND TO THE NEAREST WHOLE NUMBER.

LEGEND:

* RIGHT ARROWS WHERE APPLICABLE.

** RAISED PAVEMENT MARKERS WHERE APPLICABLE, FOR DETAILS SEE STANDARD PLAN T-37.1.2.

Storage Line (Feet)	Number of Markings
(L)	(M)
	Arrow/ONLY
96 to 192	3
193 to 280	4
281 to 368	5
369 to 456	6
457 to 544	7
545 to 632	8
633 to 720	9
721 to 808	10
809 to 896	11
897 to 984	12
985 to 1072	13
1073 to 1160	14
1161 to 1248	15
1249 to 1336	16
1337 to 1424	17
1425 to 1512	18

$$\circledast \quad \frac{L-[(M+1)\times 8]}{(M-1)} = D$$

D – Distance between Markings
L – Storage Length
M – Number of Markings

NEVADA DEPARTMENT OF TRANSPORTATION

PERMANENT STORAGE LANES, TURN ARROWS AND ONLY'S

Signed Original On File	T-38.1.2 (634)	
CHIEF SAFETY/TRAFFIC ENGR.	ADOPTED 8/98	REVISION 9/06

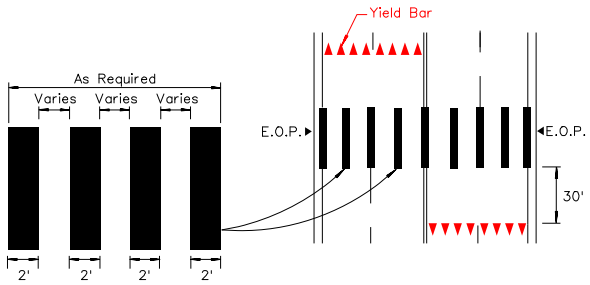

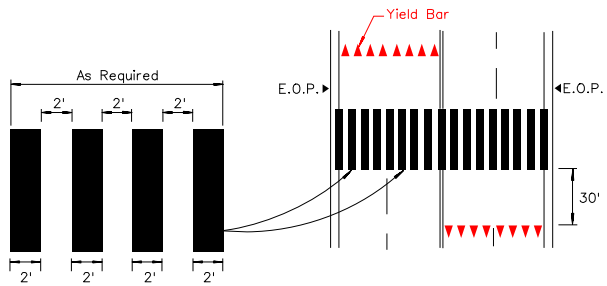

Crosswalk Bar Spacing:
Place On Travel Lane Lines, Shoulder Lines and Centered Between Travel Lane Lines (Typ.)
(Placed Parallel to Travel Lanes)

DISTRICT 1

DISTRICT 2 & 3

PERMANENT (TYPICAL) NON-SIGNALIZED, NON-STOP CONTROLLED CROSSWALK

Crosswalk Bar Spacing Placed Parallel to Travel Lanes

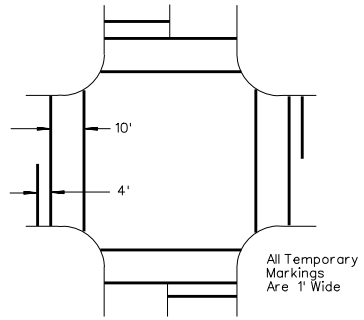

TEMPORARY CROSSWALK MARKINGS

For TEMPORARY STRIPING Exclude: PAVEMENT WORDS and SYMBOL MARKINGS (i.e. TURN ARROWS, ONLY'S, etc.)

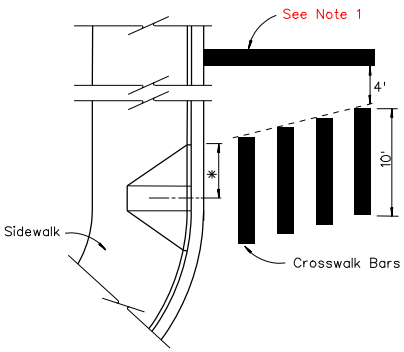

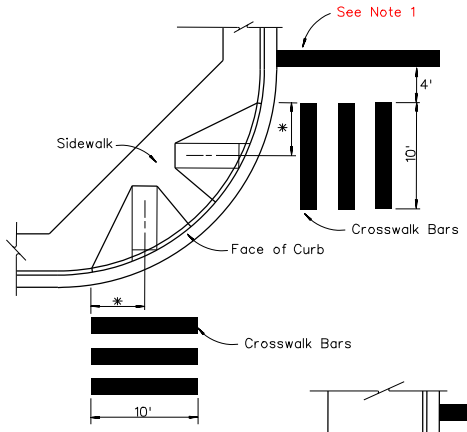

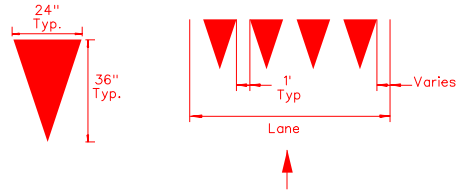

YIELD BAR
(Placed Perpendicular to Travel Lanes)

STOP BAR

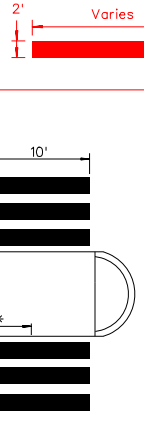

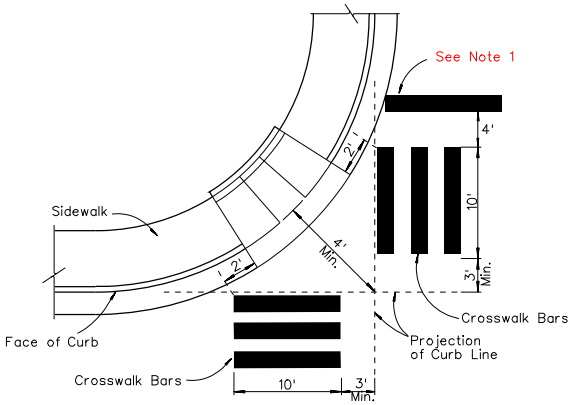

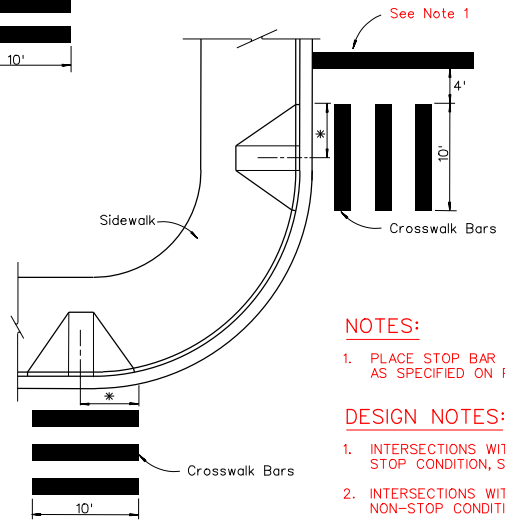

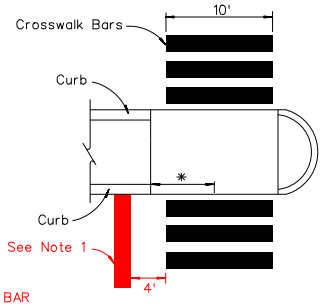

LEGEND:

* – CENTER OF CURB RAMP TO BE CENTER OF CROSSWALK.

NOTES:

1. PLACE STOP BAR (SHOWN) OR YIELD BAR AS SPECIFIED ON PLANS.

DESIGN NOTES:

1. INTERSECTIONS WITH A SIGNALIZED OR STOP CONDITION, STOP BARS SHALL BE USED.
2. INTERSECTIONS WITH A NON-SIGNALIZED OR NON-STOP CONDITION, YIELD BARS SHALL BE USED.

NEVADA DEPARTMENT OF TRANSPORTATION

PAVEMENT MARKINGS
CROSSWALKS
STOP AND YIELD BARS

Signed Original On File	T-38.1.3	(634)
CHIEF SAFETY/TRAFFIC ENGR.	ADOPTED 12/04	REVISION 5/09

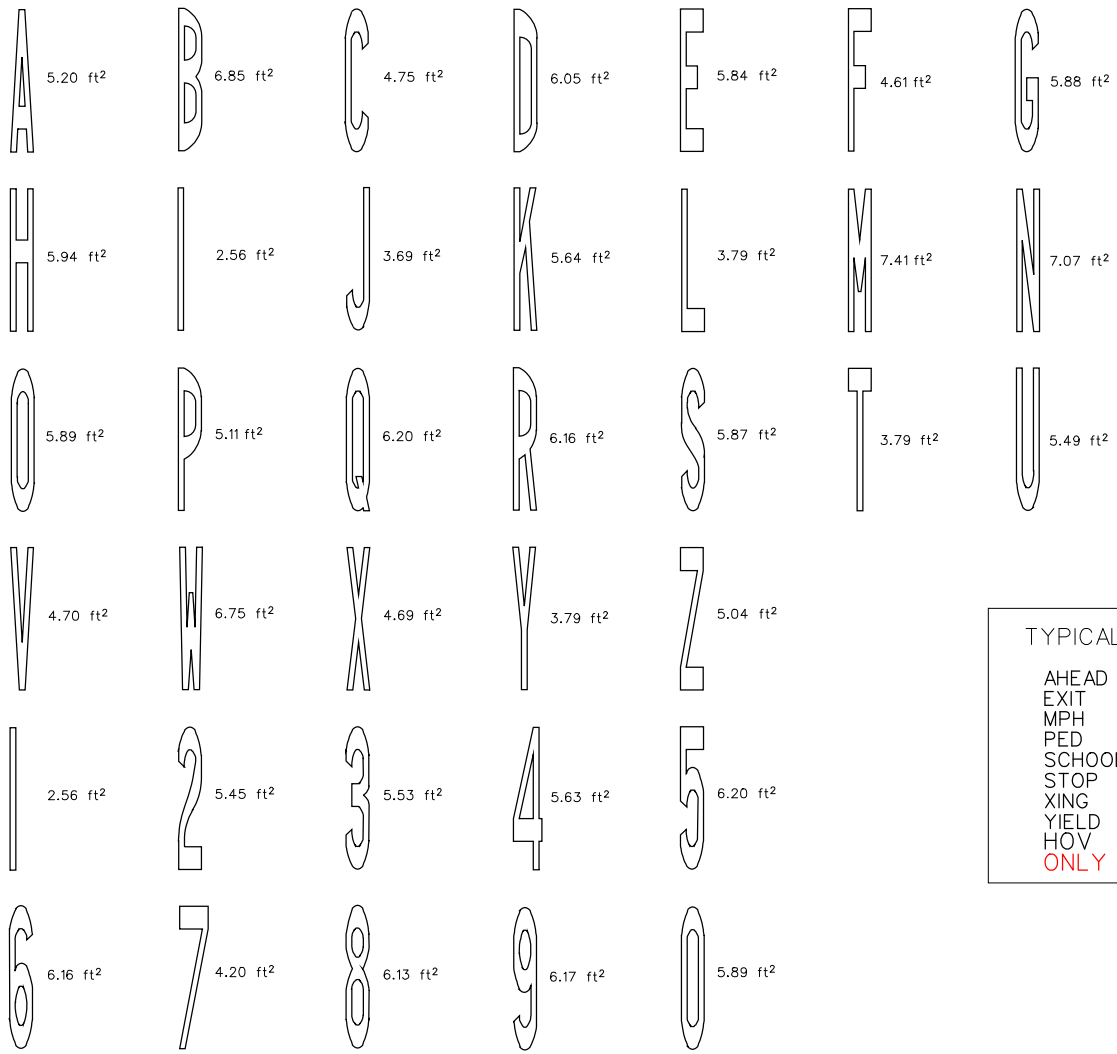

TYPICAL MARKINGS

AHEAD	28.5 ft²
EXIT	17.0 ft²
MPH	18.5 ft²
PED	17.0 ft²
SCHOOL	32.5 ft²
STOP	21.0 ft²
XING	20.5 ft²
YIELD	22.0 ft²
HOV	16.5 ft²
ONLY	21.0 ft²

TYPICAL MARKINGS

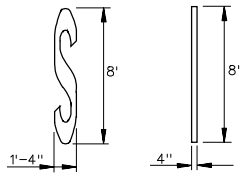

NEVADA DEPARTMENT OF TRANSPORTATION

PERMANENT
PAVEMENT MARKINGS:
LETTERS/NUMBERS

Signed Original On File	T-38.1.4	(634)
CHIEF SAFETY/TRAFFIC ENGR.	ADOPTED 9/00	REVISION 5/09

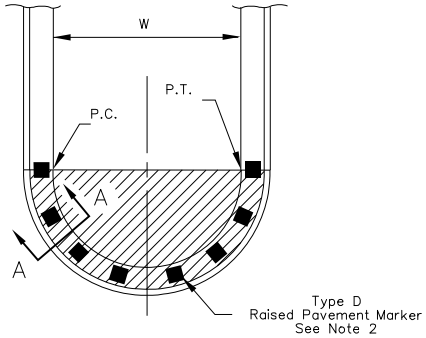

PLAN

SPACING TABLE

"W"	Number of Type D Raised Pavement Markers Per Median Nose *
1' to 2'	3
℄2' to 3'	4
℄3' to 4'	5
℄4'	1 Each For Every 1' of Curb Length

* (1) Raised Pavement Marker Each Shall Be Placed On The P.C. and The P.T. Of The Median Nose; All Others Spaced Equally Between P.T. & P.C.

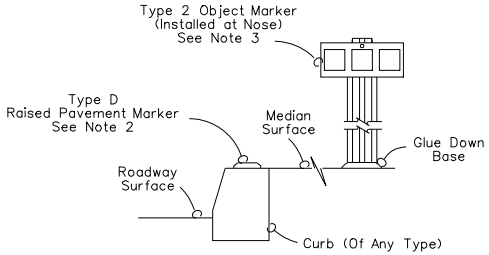

SECTION A-A
SNOW REMOVAL AREA

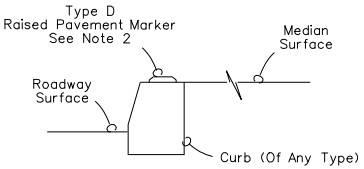

SECTION A-A
NON-SNOW REMOVAL AREA

NOTES:

1. THE ENTIRE MEDIAN SHALL BE PAINTED FROM THE MEDIAN NOSE BACK 5' OR TO THE FIRST P.C., WHICH EVER IS GREATER.
2. SEE STANDARD PLAN SHEET T-37.1.1 FOR TYPE D RAISED PAVEMENT MARKER.
3. SEE STANDARD PLAN SHEET R-9.2.1 FOR TYPE 2 OBJECT MARKER.

LEGEND:

PERMANENT PAVEMENT STRIPING (VARIES)

NEVADA DEPARTMENT OF TRANSPORTATION

MEDIAN NOSE
ISLAND MARKING

Signed Original On File	T-38.1.5	(632)
CHIEF SAFETY/TRAFFIC ENGR.	ADOPTED 11/04	REVISION 9/06

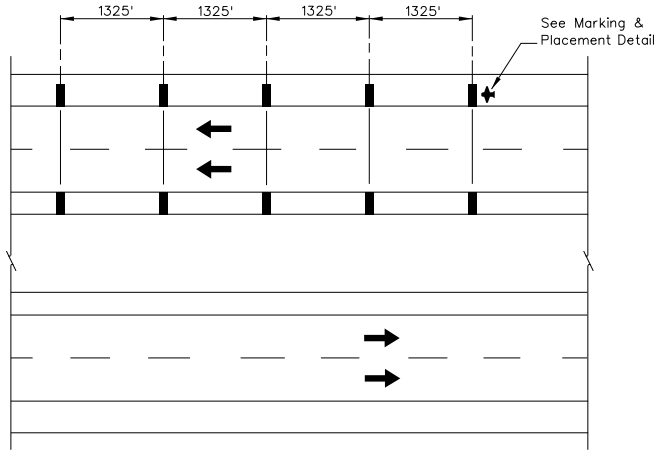

MULTILANE

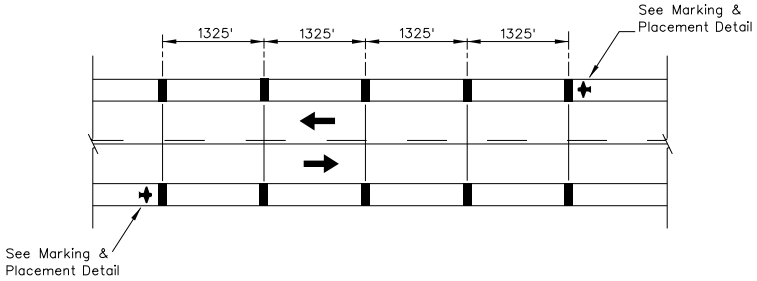

TWO LANE – TWO WAY

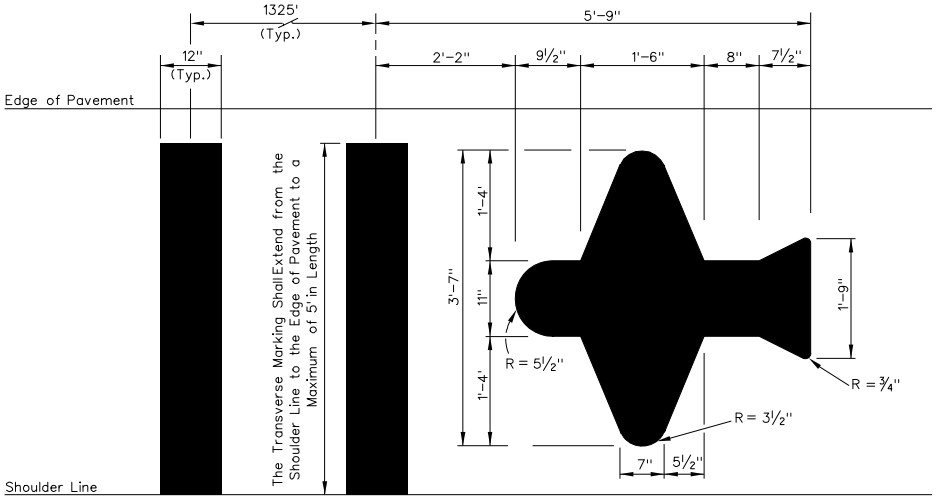

MARKING & PLACEMENT DETAIL

(Airplane 11.5 ft^2)

NOTES:

1. CONTACT NEVADA HIGHWAY PATROL PRIOR TO THE APPLICATION OF THE MARKINGS.
   CONTACT: N.H.P. HEADQUARTERS – (775) 684-4867
   CHIEF PILOT – (775) 721-9044

2. ALL PAVEMENT MARKINGS SHALL BE WHITE.

NEVADA DEPARTMENT OF TRANSPORTATION

PERMANENT
PAVEMENT MARKINGS
AIRPLANE SPEED
MONITORING SITES

Signed Original On File	T-38.1.6	(634)
CHIEF SAFETY/TRAFFIC ENGR.	ADOPTED 8/06	REVISION

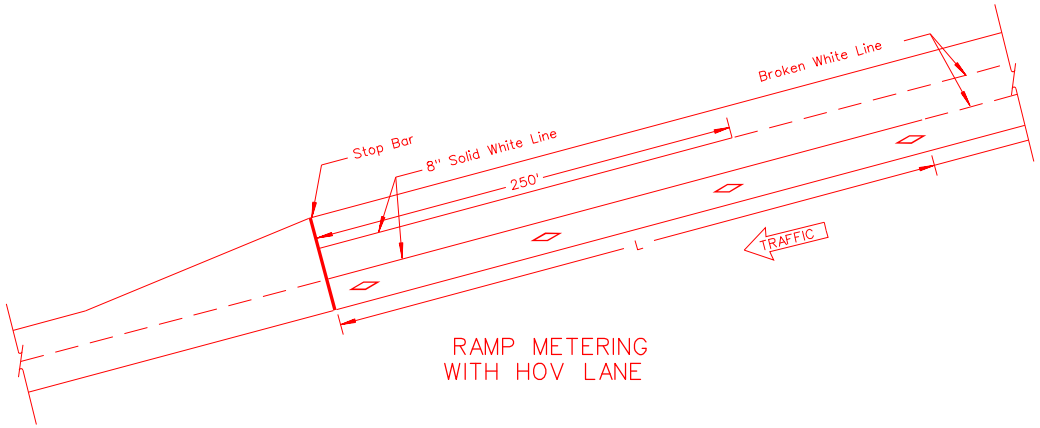

RAMP METERING
WITH HOV LANE

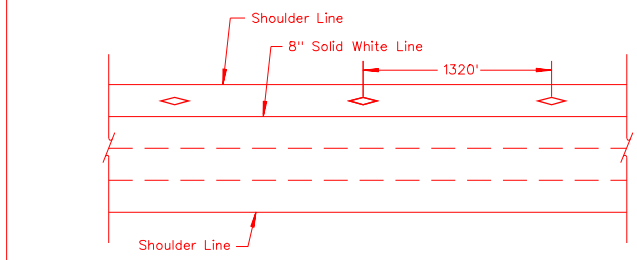

FREEWAY HOV MARKING

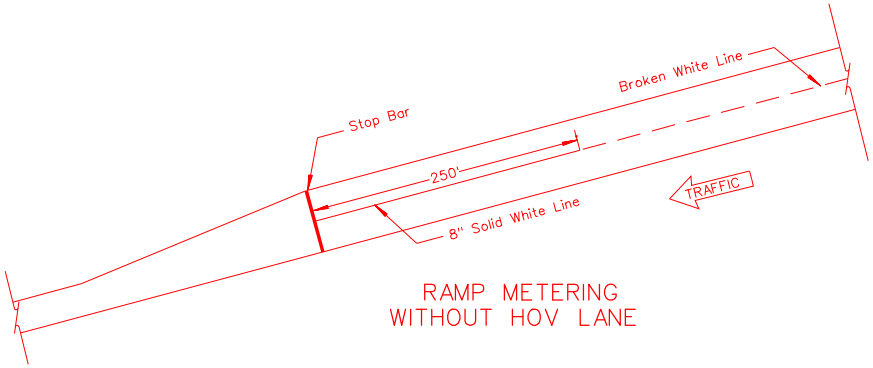

RAMP METERING
WITHOUT HOV LANE

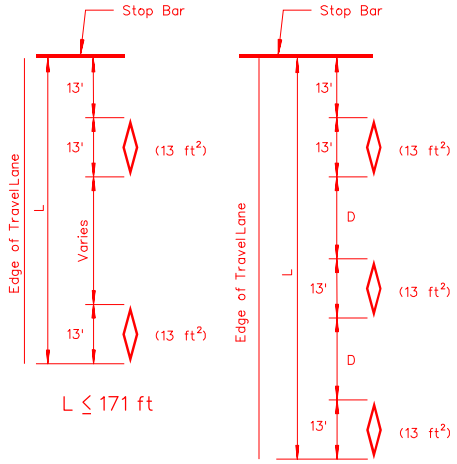

Storage Length (Feet)	Number of Markings
L	M
	HOV
172 TO 252	3
253 TO 365	4
366 TO 478	5
479 TO 591	6
592 TO 704	7
705 TO 817	8
818 TO 930	9
931 TO 1043	10
1044 TO 1156	11
1157 TO 1269	12
1270 TO 1382	13
1383 TO 1495	14
1496 TO 1608	15
1609 TO 1721	16
1722 TO 1834	17
1835 TO 1947	18

$$D = \frac{L-[(M+1)\times 13]}{(M-1)}$$

D – Distance between Markings
L – Storage Length as Directed by the Engineer
M – Number of Markings

MARKING & PLACEMENT
DETAILS

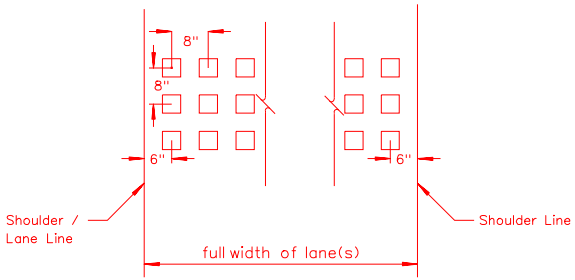

RPM
STOP BAR

☐ – RAISED PAVEMENT MARKER (TYPE C)

NOTES:

1. THE HOV SYMBOL CLOSEST TO STOP BAR SHALL BE INSTALLED 13 FEET PRIOR TO THE STOP BAR.
2. WHEN CALCULATING DISTANCE BETWEEN MARKINGS, ROUND TO THE NEAREST WHOLE NUMBER.
3. WHEN RAISED PAVEMENT MARKERS (RPM) ARE SPECIFIED, USE RPM STOP BAR.
4. WHEN A TYPICAL LANE REDUCTION (SEE SHEET T-38.1.1) BEGINS AT THE STOP BAR, OMIT MERGE ARROWS AND LANE ENDS SIGN (W4-2).
5. SEE SHEET T-38.1.1 FOR HOV MARKING DETAILS.

NEVADA DEPARTMENT OF TRANSPORTATION

PAVEMENT MARKINGS
(RAMP METERING & HOV)

Signed Original On File	T-38.1.7 (634)	
CHIEF TRAFFIC ENGINEER	ADOPTED 5/09	REVISION

GENERAL NOTES:

UNLESS NOTED OTHERWISE ON THE DRAWINGS, CONSTRUCT THE SIGN STRUCTURE TO CONFORM WITH THE FOLLOWING REQUIREMENTS:

1. CONSTRUCTION SPECIFICATIONS: STATE OF NEVADA STANDARD SPECIFICATIONS FOR ROAD AND BRIDGE CONSTRUCTION, CURRENT EDITION, AND THE SPECIAL PROVISIONS THERETO.

2. DESIGN SPECIFICATIONS: AASHTO STANDARD SPECIFICATIONS FOR STRUCTURAL SUPPORTS FOR HIGHWAY SIGNS, LUMINAIRES, AND TRAFFIC SIGNALS, 4th EDITION, 2001.

3. LOADING

   A. IMPORTANCE FACTORS (I_f & I_r): 1.0

   B. DRAG COEFFICIENT (Cd): 0.45 – 2.0 DEPENDING ON SHAPE OF MEMBER AND WIND VELOCITY

   C. MAXIMUM DEAD LOAD OF DMS: 4000 lb

   D. MAXIMUM WIND LOAD: 23.4 psf * Cd * I_r

   E. LIVE LOAD: 500 lb

   F. NATURAL WIND GUSTS: 5.2 psf * Cd * I_f

   G. GALLOPING: 21.0 psf * I_f

   H. TRUCK GUSTING: 18.8 psf * Cd * I_f

   I. WALKWAY LOAD: DEAD LOAD + 500 lb CONCENTRATED LIVE LOAD

   J. WIND SPEED 90 MPH

   K. ICE LOAD 3 psf

   L. SEISMIC ACCELERATION COEFFICIENT 0.40

   M. SOIL TYPE FOR SEISMIC DESIGN III

4. STRUCTURAL STEEL

   A. STRUCTURAL STEEL PLATES AND SHAPES SHALL CONFORM TO AASHTO M270 GRADE 36 OR ASTM A36.
   B. STEEL PIPE SHALL CONFORM TO ASTM A53,TYPE S, GRADE B.
   C. STEEL TUBING SHALL CONFORM TO ASTM A500, GRADE B.
   D. HOT DIP GALVANIZE STRUCTURAL STEEL AFTER FABRICATION IN ACCORDANCE WITH ASTM A123.

5. UNIT STRESSES

   A. STRUCTURAL STEEL : F_y = 36 ksi

   B. CONCRETE PEDESTAL CLASS A OR AA: F'_c= 4000 psi
      CONCRETE PILE CLASS D OR DA: F'_c = 4000 psi

   C. REINFORCING STEEL : ASTM A615 GRADE 60

6. BOLTED CONNECTIONS.

   A. ACCOMPLISH ALL STRUCTURAL HIGH STRENGTH BOLTING, EXCEPT ANCHOR BOLTS, USING AASHTO M164 BOLTS.
   B. USE A HARDENED FLAT WASHER BETWEEN THE NUT AND THE CONNECTED PART.
   C. USE HIGH STRENGTH BOLTS WITH DTI'S OR TENSION CONTROL INDICATORS INSTALLED PER SUBSECTION 506.03.07 OF THE STANDARD SPECIFICATIONS.
   D. FABRICATE ANCHOR BOLTS FROM MATERIAL CONFORMING TO AASHTO M314 GRADE 36 AND SUPPLEMENTARY REQUIREMENT S1.
   E. HOT-DIP GALVANIZE ALL STEEL PARTS IN ACCORDANCE WITH ASTM A153, EXCEPT AS SHOWN FOR ONLY THE TOP 12" FOR ANCHOR BOLTS, AND AS SPECIFIED FOR HIGH STRENGTH BOLTING.
   F. HIGH STRENGTH BOLTS SHALL BE HOT-DIP GALVANIZED IN ACCORDANCE WITH ASTM A153, CLASS C, OR MECHANICALLY GALVANIZED IN ACCORDANCE WITH ASTM B695, CLASS 50. WASHERS, NUTS, AND BOLTS IN ANY ASSEMBLY SHALL BE GALVANIZED BY THE SAME PROCESS. LUBRICATE THREADS WITH A DYED LUBRICANT.

7. WELDED CONNECTIONS

   A. WELDS SHALL BE CONTINUOUS UNLESS OTHERWISE NOTED ON THE PLANS.
   B. WELD IN ACCORDANCE WITH SECTION 506 OF THE STANDARD SPECIFICATIONS.
   C. USE ONLY WELDERS QUALIFIED ACCORDING TO ANSI/AASHTO/AWS D1.1-2000, SECTION 4 FOR THE TYPE OF JOINT, ELECTRODE, POSITION OF THE JOINT, AND THE MATERIAL THICKNESS.
   D. USE ONLY PREQUALIFIED JOINTS.
   E. TEST ALL FULL PENETRATION GROOVE WELDS ULTRASONICALLY IN ACCORDANCE WITH SECTION 6, PART F OF ANSI/AASHTO/AWS D1.1-2000. ACCEPT OR REJECT EACH WELD DISCONTINUITY ON THE BASIS OF ITS INDICATION RATING AND ITS LENGTH IN ACCORDANCE WITH SECTION 9.3.
   F. HAVE ALL FILLET WELDS VISUALLY INSPECTED BY QUALIFIED PERSONNEL. ANY WELDS FOUND TO HAVE INCOMPLETE FUSION, OVERLAP OR CRACKS WILL BE REJECTED.

8. GROUTING

   A. SHIM BASE PLATES TO FINISH ELEVATION AND COMPLETELY FILL PLATE AREA WITH A HIGH STRENGTH, NON-FERROUS, NON-SHRINK GROUT.
   B. FORMULATE GROUT TO COMPLY WITH THE ASTM C1107.
   C. TAPER ALL FINISHED SURFACES AT 45 DEGREE +/-.

9. REFER TO NDOT STANDARDS SPECIFICATIONS SECTIONS 502, 505, 506 AND 509 FOR ADDITIONAL INFORMATION.

10. MINIMUM VERTICAL ROADWAY CLEARANCE IS 18 FEET TO THE BOTTOM OF THE STRUCTURAL FRAME AND WALKWAY BRACKETS.

11. CONSTRUCT SIGN STRUCTURES TRUE TO DIMENSIONS, FREE FROM KINKS, TWISTS OR BENDS, AND UNIFORM IN APPEARANCE. ASSEMBLE THE COMPLETED SECTIONS IN THE SHOP AND CHECK FOR STRAIGHTNESS, ALIGNMENT, AND DIMENSION. CORRECT ANY VARIATIONS AS APPROVED.

12. AFFIX CLIPS, EYES, OR REMOVABLE BRACKETS TO ALL POSTS AND TRUSSES, AS NECESSARY, TO SECURE THE SIGN DURING SHIPPING AND FOR LIFTING AND MOVING DURING ERECTION. THIS IS TO PREVENT DAMAGE TO THE FINISHED GALVANIZED OR PAINTED SURFACES. REMOVE BRACKETS ON TUBULAR SIGN STRUCTURES AFTER ERECTION. SHOW DETAILS OF SUCH DEVICES ON THE SHOP DRAWINGS.

13. ALL DETAILS OF THE SINGLE-POST CANTILEVER SIGN SHALL BE AS CALLED FOR IN SHEETS T-39.1.2 THRU T39.1.9.

14. FABRICATE ALL SIGN STRUCTURES INTO THE LARGEST PRACTICAL SECTIONS PRIOR TO GALVANIZING.

15. GROUND ALL STRUCTURES IN ACCORDANCE WITH APPLICABLE ELECTRICAL CODES.

16. NPS = NOMINAL PIPE SIZE.

17. 30 DAYS PRIOR TO FABRICATION, SUBMIT TO NDOT (6)SIX SETS OF SHOP DRAWINGS, WHICH MUST COMPLY WITH THE REQUIREMENTS OF SUB SECTION 105.02 OF THE STANDARD SPECIFICATIONS.

18. PROVIDE A SUPPLIER DESIGNED CONNECTION FOR THE DMS SIGN TO THE OVERHEAD SIGN STRUCTURE. THE DESIGN, INCLUDING MATERIAL SPECIFICATIONS IS TO BE STAMPED BY A NEVADA REGISTERED PROFESSIONAL CIVIL OR STRUCTURAL ENGINEER.

NEVADA DEPARTMENT OF TRANSPORTATION

SINGLE POST DMS
OVERHEAD SIGN
GENERAL NOTES

Signed Original On File	M-1.1	(623)
CHIEF BRIDGE ENGINEER	ADOPTED 12/06	REVISION

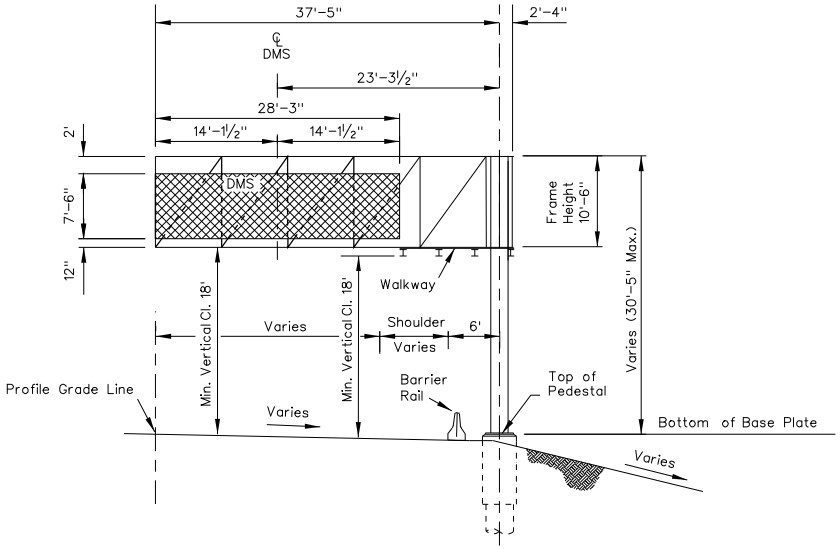

ELEVATION
Barrier Rail Shown

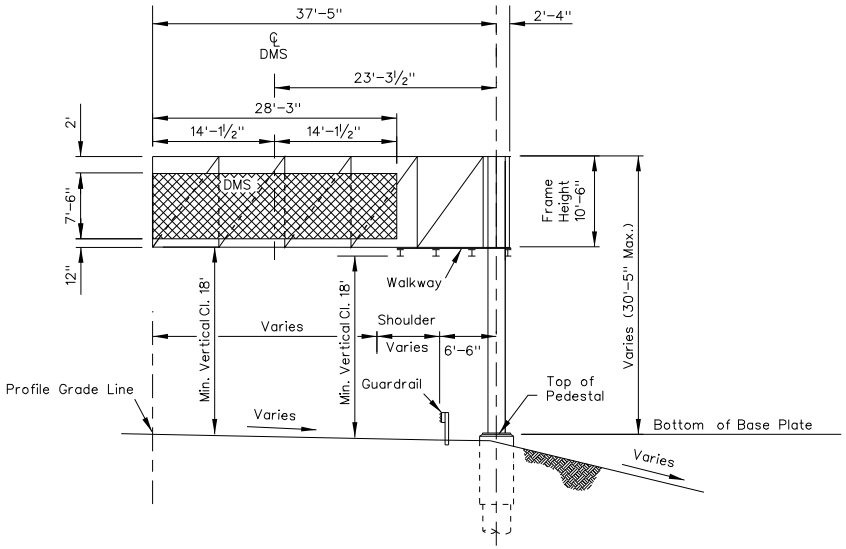

ELEVATION
Guardrail Shown

NOTES:

1. FIELD VERIFY ELEVATIONS AND CONTROLLING DIMENSIONS PRIOR TO ORDERING OR FABRICATING ANY MATERIALS.
2. VERIFY ALL POST HEIGHTS AND SPAN LENGTHS PRIOR TO ORDERING THE FABRICATION OF POSTS AND TRUSS ASSEMBLIES.
3. SEE VENDOR REQUIREMENTS FOR DMS MOUNTING BRACKET DETAILS. CONTRACTOR IS RESPONSIBLE FOR FABRICATION AND INSTALLATION OF DMS ATTACHMENT VERTICAL SUPPORTS.
4. PLACE TOP OF PEDESTAL ELEVATION BETWEEN 2½" AND 4" BELOW BOTTOM OF BASE PLATE ELEVATION. SEE SHEET T-39.1.9 FOR FOUNDATION DETAILS.
5. INSTALL FOUNDATION CAP MAINTENANCE PAD FOR 3:1 SLOPE OR STEEPER. SEE SHEET T-39.1.10 FOR DETAILS.

NEVADA DEPARTMENT OF TRANSPORTATION

SINGLE POST DMS
OVERHEAD SIGN
ELEVATION

Signed Original On File	M-1.2	(623)
CHIEF BRIDGE ENGINEER	ADOPTED 12/06	REVISION

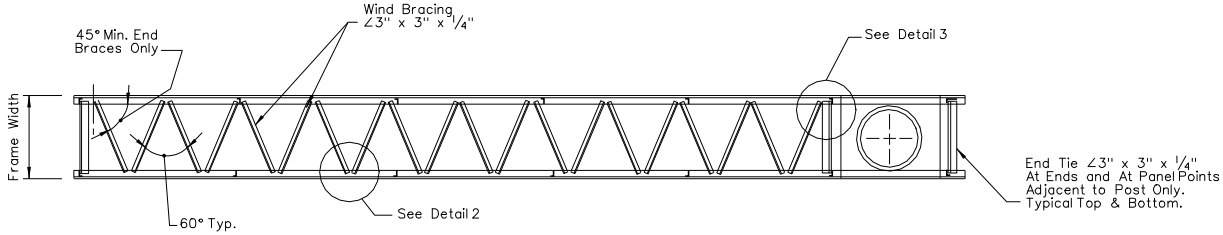

SECTION A–A

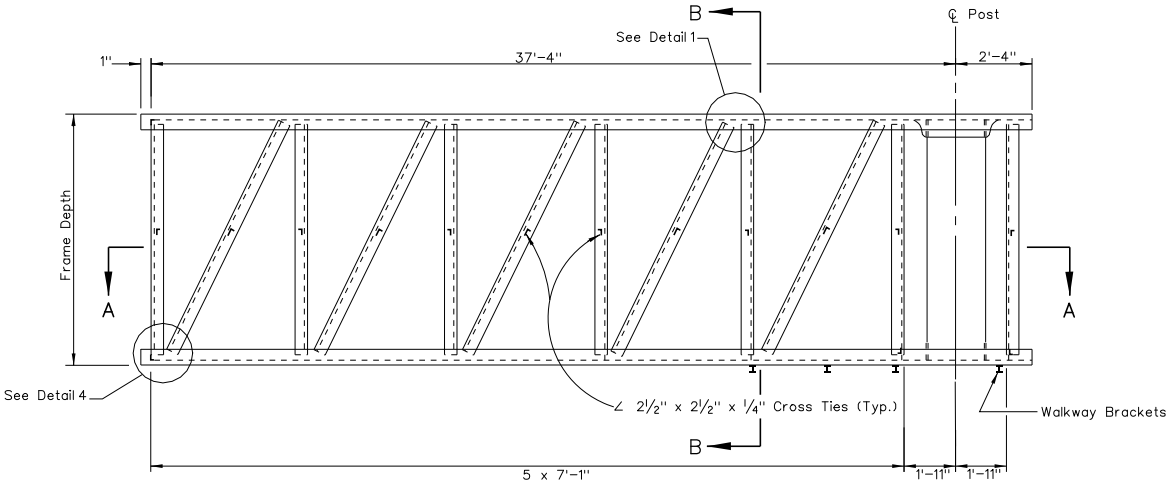

ELEVATION

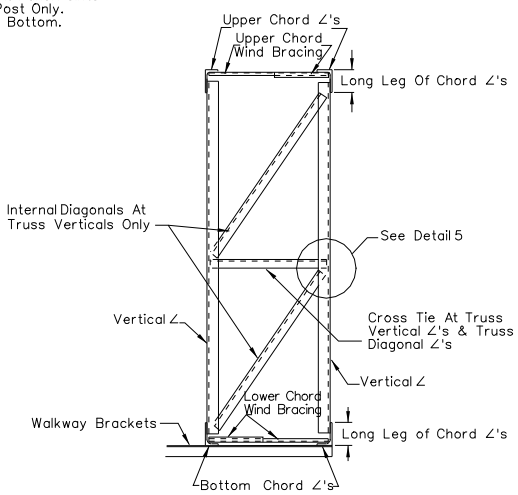

TYPICAL SECTION B–B
INTERNAL BAY

Diagonal ∠'s In Plane of Truss, Not Shown.
Bracing Shown is at All Vertical ∠'s of Truss.
Cross Ties for Diagonals Require Same Weld
as Cross Ties at Verticals.

TABLE 1

SPAN (ft)	Frame Width (ft)	Frame Depth (ft)	CHORD ∠'s	VERTICAL ∠'s	DIAGONAL ∠'s	DIAGONAL WIND BRACING ∠'s	INT. BAY DIAG. BRACING	INT. BAY CROSS TIE
39'–9"	3'–9"	10'–6"	8"x 6"x 3/4"	4"x 4"x 5/16"	4"x 4"x 5/16"	3"x 3"x 1/4"	3"x 3"x 1/4"	2½"x 2½"x 1/4"

NOTES:

1. FOR DETAILS 1 THRU 5 SEE T–39.1.4.
2. FOR CONNECTION OF FRAME TO POST SEE FRAME JUNCTURE DETAILS ON SHEET T–39.1.6.
3. FOR WALKWAY DETAILS SEE T–39.1.8.

NEVADA DEPARTMENT OF TRANSPORTATION

SINGLE POST DMS
OVERHEAD SIGN
STRUCTURAL FRAME
MEMBERS

Signed Original On File	M-1.3	(623)
CHIEF BRIDGE ENGINEER	ADOPTED 12/06	REVISION

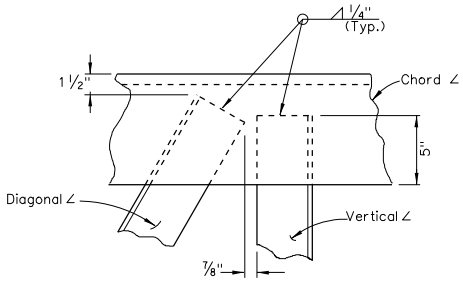

DETAIL 1

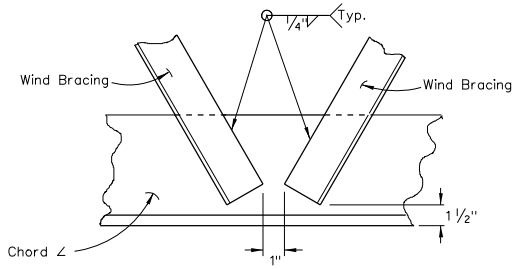

DETAIL 2

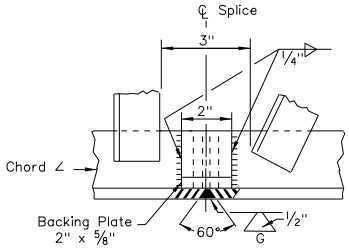

WELDED CHORD SPLICE

Prepare Edges By Beveling To Angle Shown. Weld To 100% Full Penetration & Grind Flush With Base Metal.

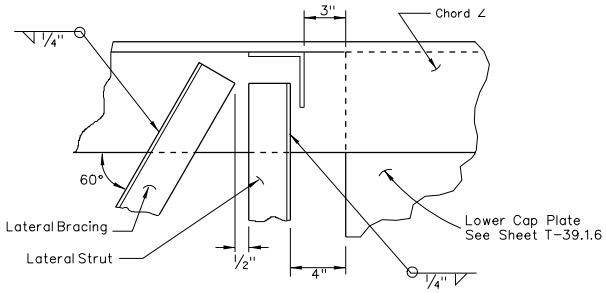

DETAIL 3

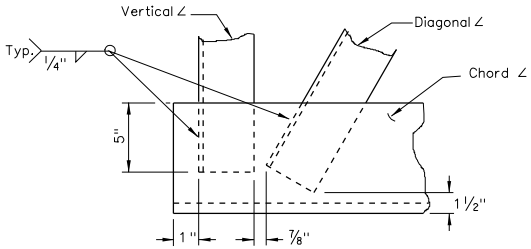

DETAIL 4

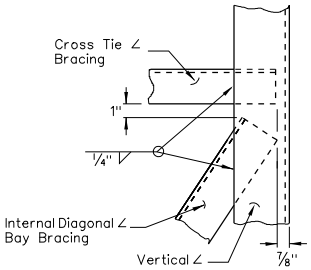

DETAIL 5

NEVADA DEPARTMENT OF TRANSPORTATION

SINGLE POST DMS
OVERHEAD SIGN
STRUCTURAL FRAME
DETAILS

Signed Original On File	M-1.4	(623)
CHIEF BRIDGE ENGINEER	ADOPTED 12/06	REVISION

NOTES:

1. FOR GENERAL NOTES SEE "INSTRUCTIONS AND EXAMPLES" STANDARD PLAN T-36.1.1.
2. SET BASE PLATES AND LONGER SIDE OF PEDESTALS NORMAL TO AXIS OF SIGN.
3. PLACE BACKFILL IN PLACE PRIOR TO ERECTION OF POST.
4. THREAD UPPER 8" OF ANCHOR BOLTS AND GALVANIZE UPPER 12".
5. FOR REINFORCEMENT, EMBEDMENT IS CLEAR TO OUTSIDE OF BAR AND IS 2" TO THE MAIN REINFORCEMENT, EXCEPT AS NOTED.
6. RETAIN ANCHOR PLATES WITH HEX NUT OR FORMED HEAD.
7. RAKE THE POST OUT OF PLUMB, WITH THE USE OF THE LEVELING NUTS TO MAKE THE BOTTOM OF THE SIGN FRAME LEVEL.
8. AT FINAL POSITION OF POST TIGHTEN ALL TOP AND BOTTOM NUTS AGAINST BASE PLATE.

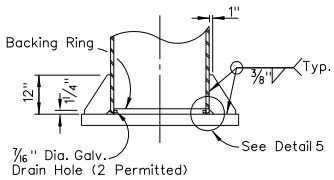

SECTION C-C

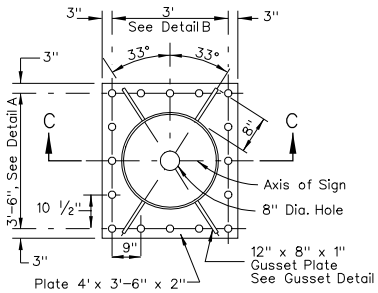

BASE PLATE

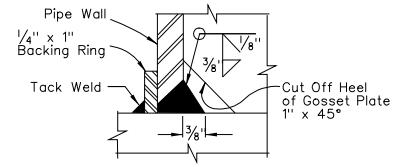

DETAIL 5

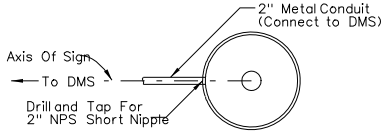

SECTION D-D

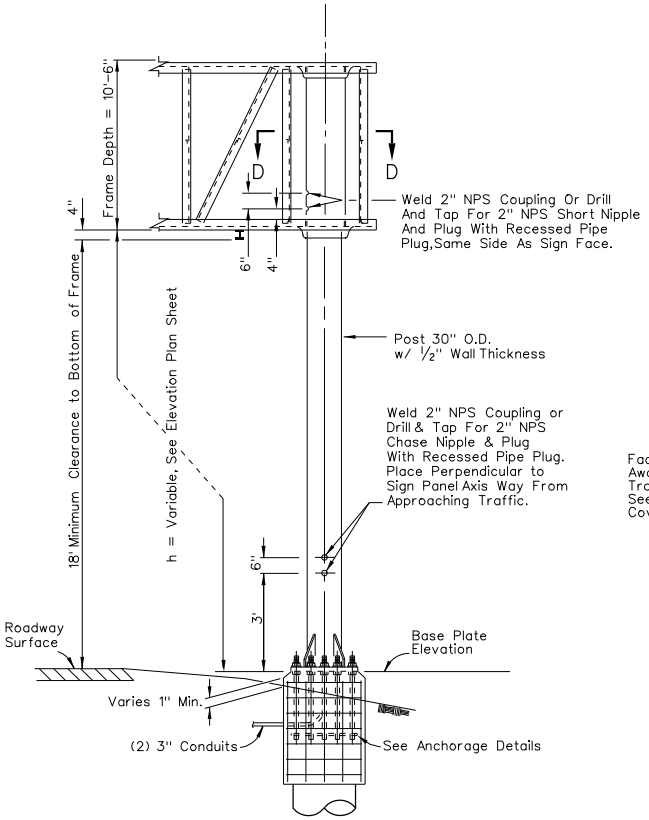

ELEVATION

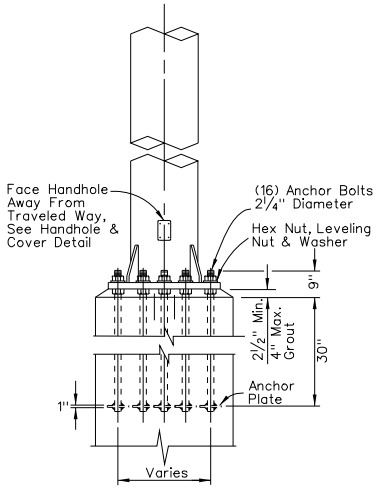

ANCHORAGE DETAILS

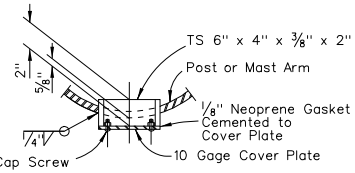

PLAN

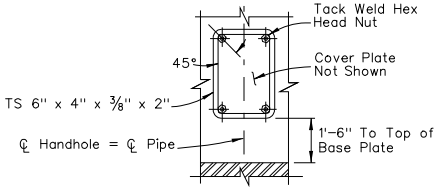

ELEVATION

HANDHOLE & COVER DETAIL

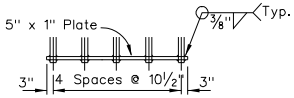

DETAIL A
Anchor Type

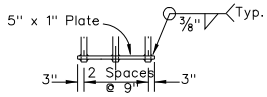

DETAIL B
Anchor Type

NEVADA DEPARTMENT OF TRANSPORTATION

SINGLE POST DMS OVERHEAD SIGN POST DETAILS

Signed Original On File	M-1.5	(623)
CHIEF BRIDGE ENGINEER	ADOPTED 12/06	REVISION

NOTES:

1. WHEN DRILLING HOLES FOR UNFINISHED BOLTS, DO NOT EXCEED NOMINAL BOLT DIAMETER BY MORE THAN 1/16".
2. USE ONLY GALVANIZED BOLTS, NUTS, AND WASHERS.
3. IN ALL CASES, SUPPORT SIGN FRAME AT TOP OF POST. FINISH THE BEARING SURFACE TRUE AT THE TOP OF THE POST.
4. AT LOWER JUNCTURE CONNECTION, USE SHIMS WHERE ANY CLEARANCE EXISTS BETWEEN BOTTOM OF FRAME AND POST PLATE PRIOR TO TIGHTENING OF BOLTS IN LOWER CONNECTION. SHIMS MAY BE GALVANIZED STEEL CUT WASHERS.

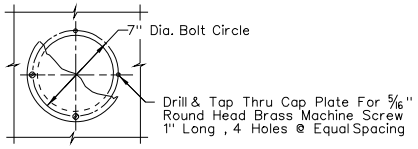

PLAN

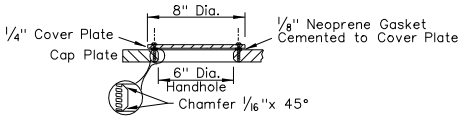

SECTION

BOLT ACCESS HOLE DETAIL

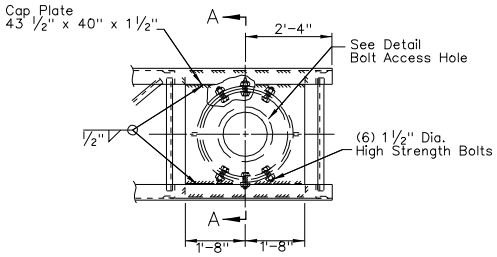

PLAN

Drill Thru Outer Collar and Post Wall For Bolts. Provide Hardened Contoured Washers Under Bolt Head and Nut, Hardened Contoured Washers To Be 3" x 3" x 5/16" Min. Grind Face to Fit.

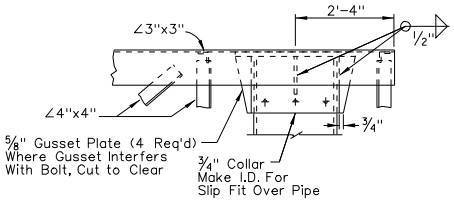

ELEVATION

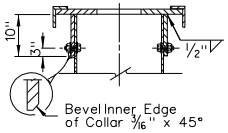

SECTION A–A

UPPER JUNCTURE CONNECTION

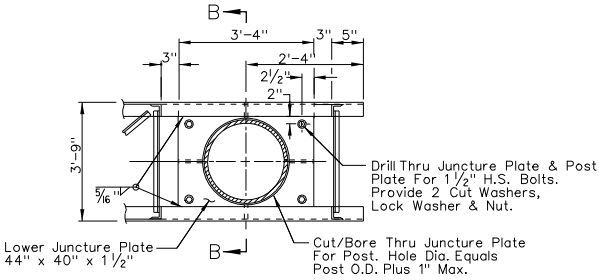

PLAN

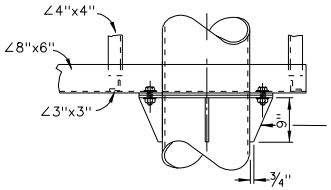

ELEVATION

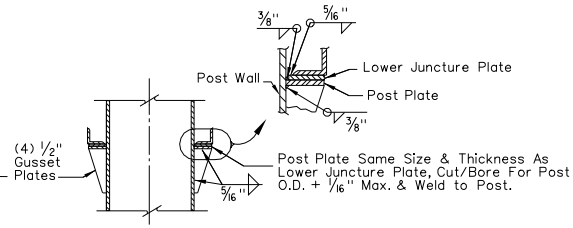

SECTION B–B

LOWER JUNCTURE CONNECTION

NEVADA DEPARTMENT OF TRANSPORTATION

SINGLE POST DMS OVERHEAD SIGN FRAME JUNCTURE DETAILS

Signed Original On File	M-1.6	(623)
CHIEF BRIDGE ENGINEER	ADOPTED 12/06	REVISION

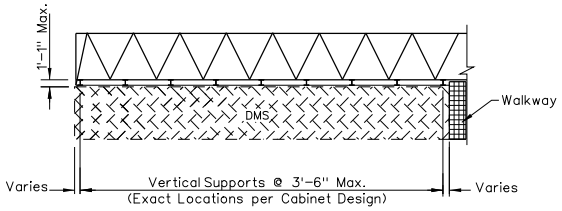

PLAN VIEW

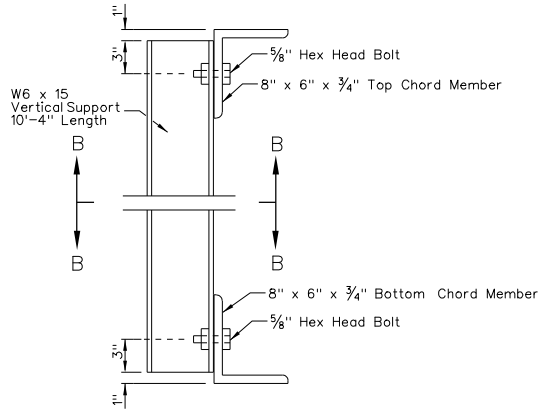

DETAIL A

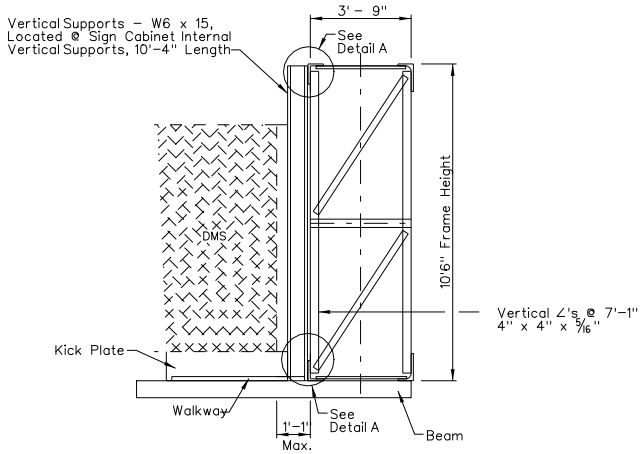

SECTION A–A

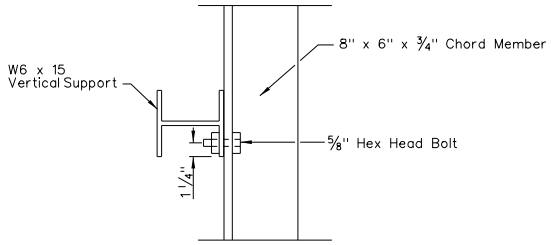

SECTION B–B

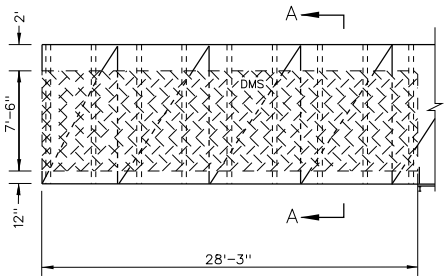

ELEVATION

NEVADA DEPARTMENT OF TRANSPORTATION

SINGLE POST DMS
OVERHEAD SIGN
SUPPORT DETAILS

Signed Original On File	M-1.7	(623)
CHIEF BRIDGE ENGINEER	ADOPTED 12/06	REVISION

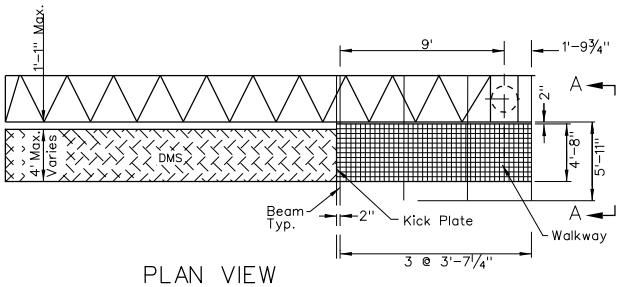

PLAN VIEW

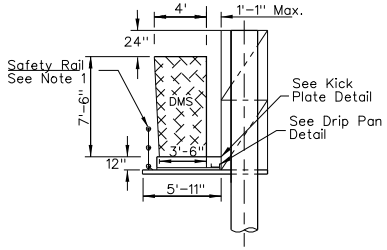

VIEW A-A

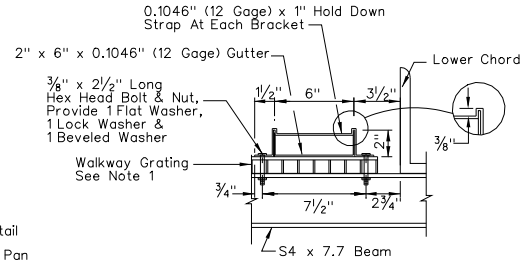

DRIP PAN DETAIL

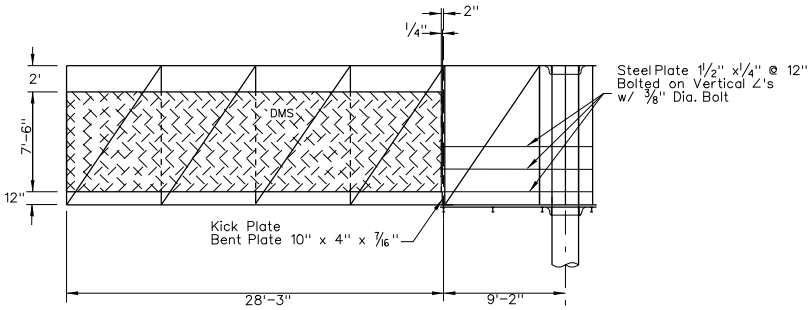

FRONT ELEVATION

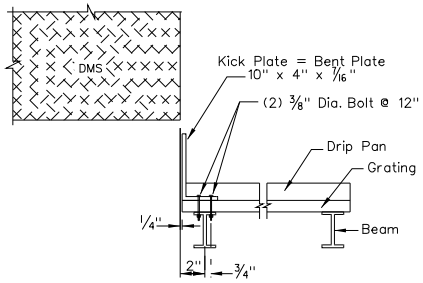

KICK PLATE DETAIL

NOTES:

1. UNLESS OTHERWISE NOTED HEREIN, REFER TO T-36.1.9 AND T-36.1.11 FOR WALKWAY DRIP PAN AND SAFETY RAIL DETAILS.
2. FIELD VERIFY ELEVATIONS PRIOR TO FABRICATION.
3. VERIFY WALKWAY LAYOUT BEFORE FABRICATION.
4. COORDINATE THE CONNECTION OF THE DMS TO THE TRUSS WITH THE DMS FABRICATOR.

NEVADA DEPARTMENT OF TRANSPORTATION

SINGLE POST DMS OVERHEAD SIGN CATWALK LAYOUT

Signed Original On File	M-1.8	(623)
CHIEF BRIDGE ENGINEER	ADOPTED 12/06	REVISION

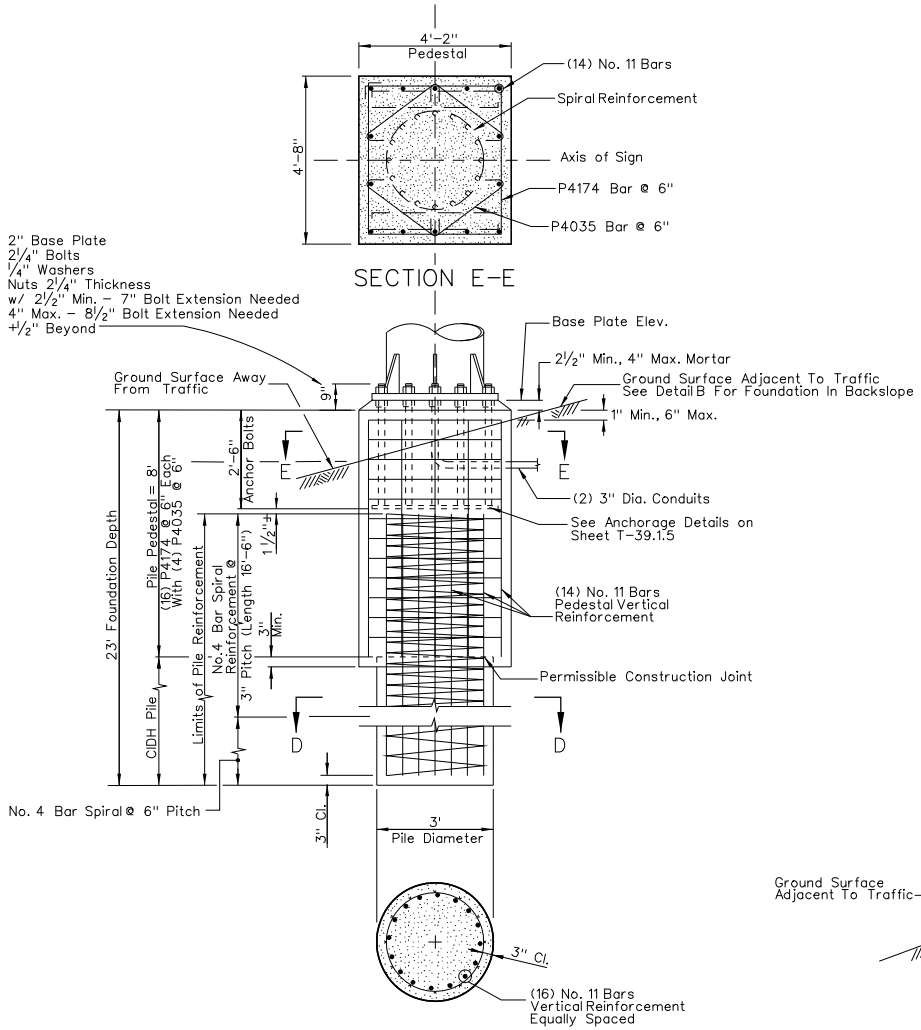

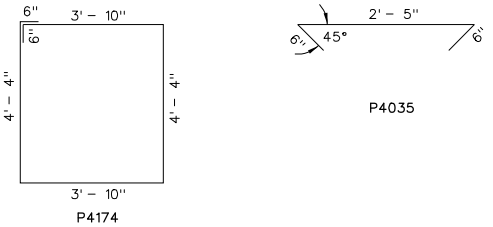

DMS PEDESTAL BENT BARS

NOTES:

1. FOR ANCHOR BOLT LAYOUT, SEE SHEET T-39.1.5.
2. FOR TOP OF BASE PLATE ELEVATION, SEE SHEET T-39.1.2.
3. USE CLASS A OR AA CONCRETE (F'c = 4000 psi).
4. LONGER SIDE OF BASE PLATES, PEDESTALS AND FOOTINGS SHALL BE ORIENTED PERPENDICULAR TO THE SIGN AXIS.
5. PLACE BACKFILL EQUIVALENT TO THE SURROUNDING MATERIAL PRIOR TO ERECTION OF THE POST.
6. FORM PEDESTAL 6" MINIMUM BELOW GROUND SURFACE.

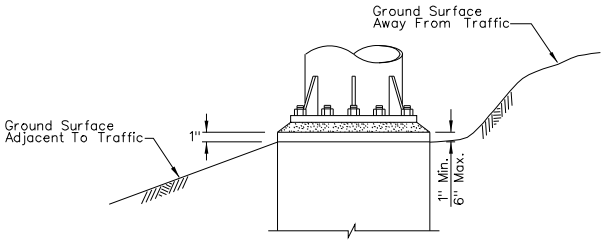

DETAIL B

NEVADA DEPARTMENT OF TRANSPORTATION

SINGLE POST DMS
OVERHEAD SIGN
FOUNDATION DETAILS

Signed Original On File	M-1.9	(623)
CHIEF BRIDGE ENGINEER	ADOPTED 12/06	REVISION

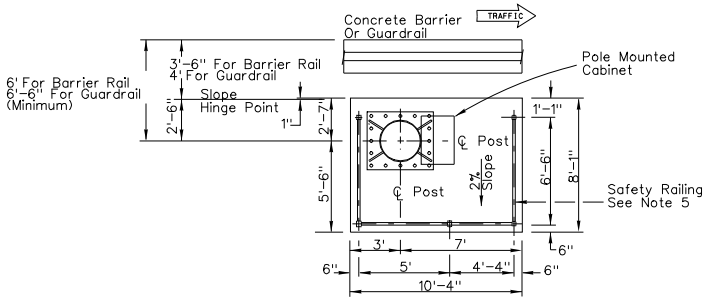

PLAN

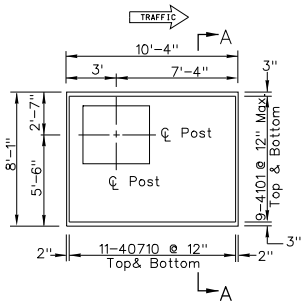

PAD REINFORCING

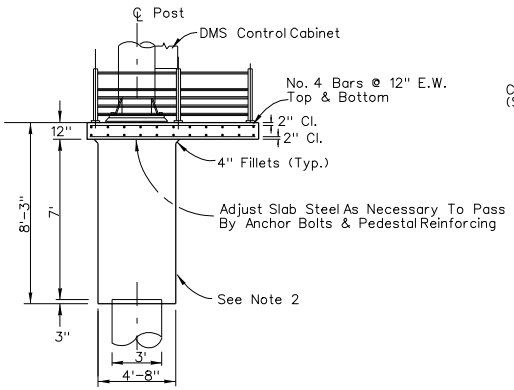

ELEVATION

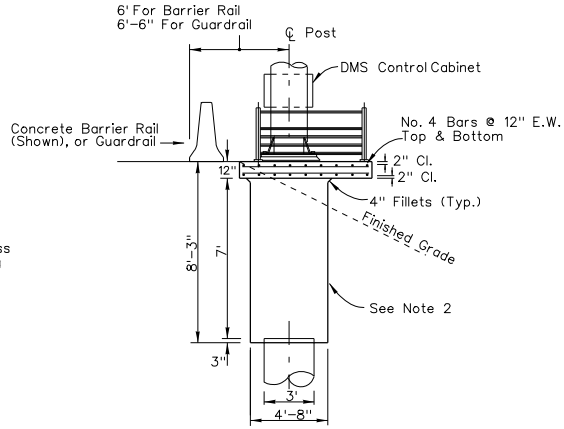

SECTION A-A
ELEVATION

NOTES:

1. REFER TO DMS ELEVATION SHEETS FOR INSTALLATION LOCATIONS.
2. FOR PILE PEDESTAL AND PILE DETAILS, SEE SHEET T-39.1.9.
3. FOR POST AND BASE PLATE DETAILS, SEE SHEET T-39.1.5.
4. FOR DMS CONTROL CABINET INSTALLATION DETAILS, SEE SHEET VENDOR REQUIREMENTS.
5. INSTALL RAILING PER "PEDESTRIAN RAIL TYPE "R" (MODIFIED)" DETAILS ON SHEET T-39.1.11.
6. INSTALL A FOUNDATION CAP MAINTENANCE PAD AT ALL LOCATIONS WHERE A DMS CONTROL CABINET IS ABOVE A 3:1 OR STEEPER SLOPE. INSTALL A 48" x 48" x 4" CONCRETE PAD IN FRONT OF DMS CONTROL CABINET ON SLOPES FLATTER THAN 3:1. PAD SHALL SLOPE 2% IN DIRECTION OF EXISTING DRAINAGE.

NEVADA DEPARTMENT OF TRANSPORTATION

DMS MAINTENANCE PAD

Signed Original On File	M-1.10	(623)
CHIEF BRIDGE ENGINEER	ADOPTED 12/06	REVISION X/XX

NOTES:

1. CONCRETE SHALL BE CLASS A OR AA.
2. ROUGH BROOM TEXTURE ON FRONT AND REAR PADS.
3. INSTALL GROUND ROD WIRE CONDUIT IN ALL CABINET FOUNDATIONS. GROUND ROD WIRE CONDUIT TO BE USED WHEN AN ADDITIONAL GROUND ROD IS REQUIRED.

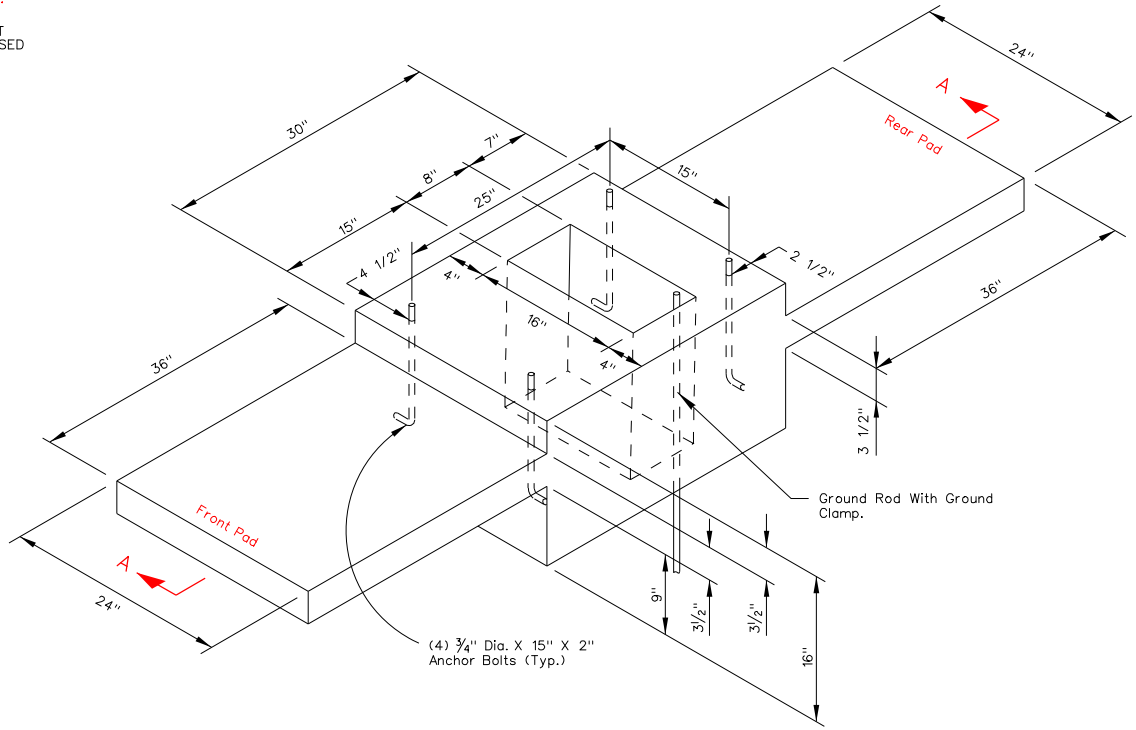

FOUNDATION

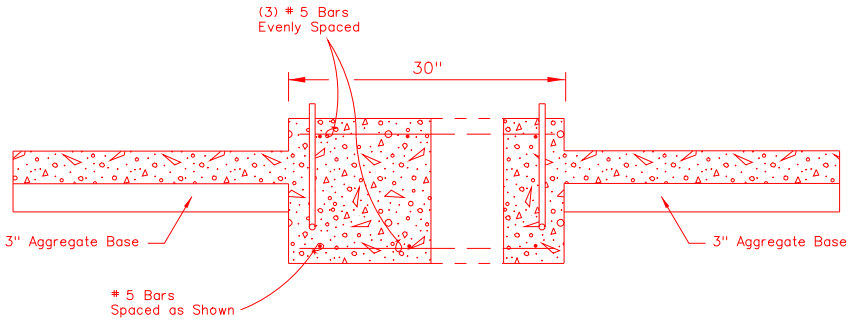

SECTION A–A

NEVADA DEPARTMENT OF TRANSPORTATION

CABINET FOUNDATION TYPE 1

Signed Original On File	M-1.11	(623)
CHIEF BRIDGE ENGINEER	ADOPTED 12/06	REVISION 5/09

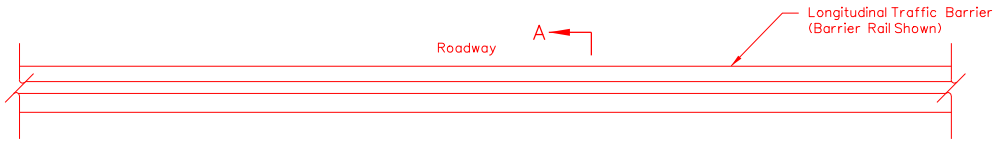

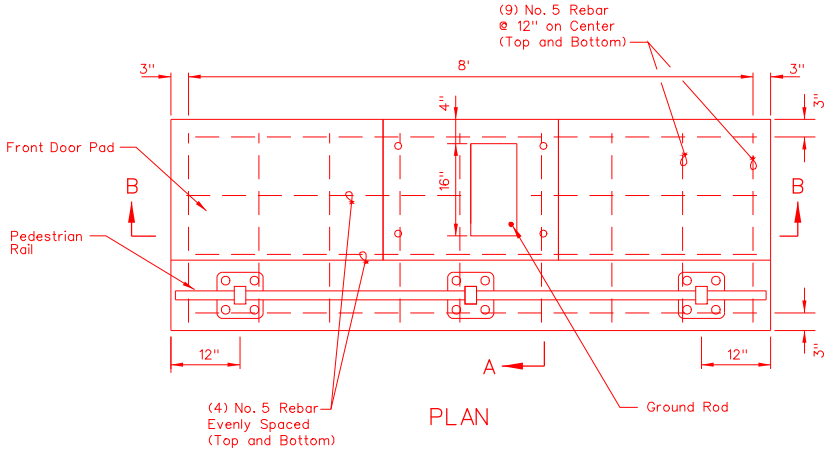

PLAN

NOTES:

1. CONCRETE SHALL BE CLASS A OR AA.
2. STRUCTURE EXCAVATION & BACKFILL SHALL CONFORM TO SECTIONS 206 & 207 OF THE STANDARD SPECIFICATIONS.
3. SEE PLANS FOR NUMBER AND SIZE OF CONDUITS.
4. EXPOSED EDGES OF CONCRETE SHALL BE CHAMFERED 1".
5. SEE PLANS FOR CONDUIT CONFIGURATION.
6. FOR GUARDRAIL SEE METHOD 3 SHEET R-8.3.1.

DESIGN NOTES:

D1. TYPE 2 CABINET FOUNDATION WITH HANDRAIL TO BE USED ON SLOPES OF 3:1 OR STEEPER.

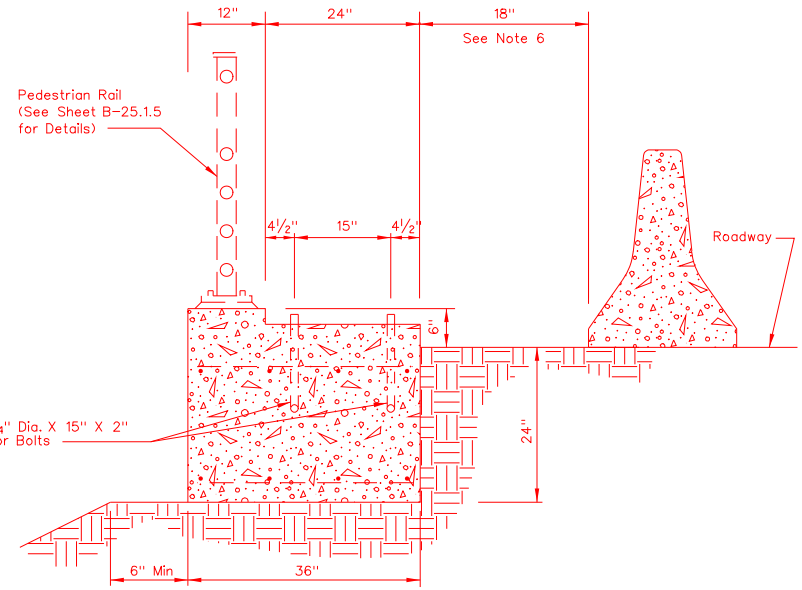

SECTION A-A

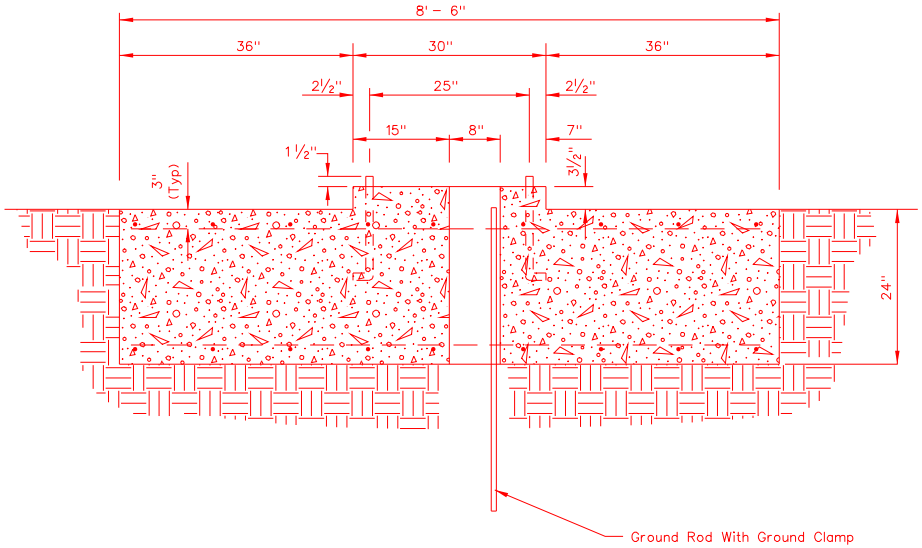

SECTION B-B

NEVADA DEPARTMENT OF TRANSPORTATION

CABINET FOUNDATION
TYPE 2

Signed Original On File	M-1.12	(623)
CHIEF OPER/MAINT ENGR.	ADOPTED 5/09	REVISION

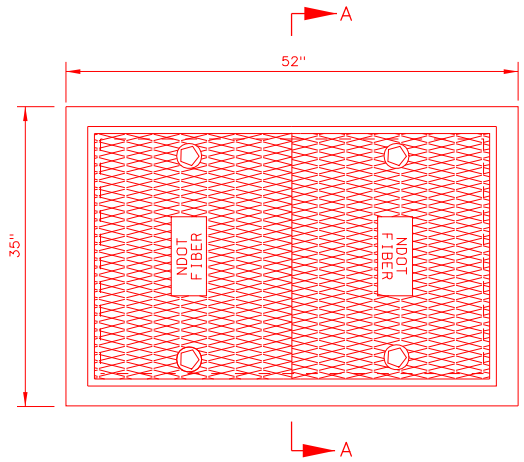

PLAN

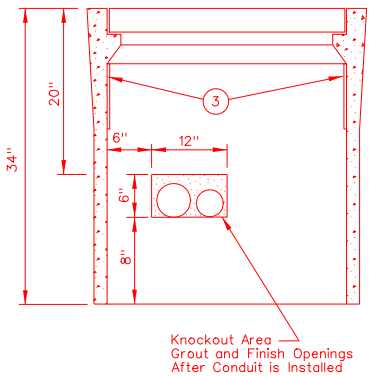

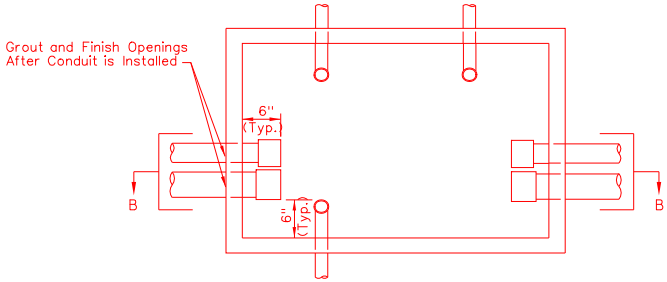

PLAN
(COVER REMOVED)

NOTES:

1. TOP OF TRUNKLINE CONDUITS ENTERING THROUGH SIDE OF PULL BOX SHALL BE LOCATED AT LEAST 20" BELOW FINISHED GRADE.
2. SEE PLAN SHEETS FOR NUMBER AND SIZE OF CONDUIT. TRUNKLINE CONDUITS SHALL ENTER THROUGH KNOCKOUTS.
3. IF MORE THAN 3 CONDUITS ARE REQUIRED, KNOCKOUT SHALL BE WIDENED ⅜" MORE THAN THE ADDITIONAL CONDUIT WIDTH.
4. LOCKING MECHANISM SHALL BE PROVIDED FOR COVER. FOUR ¾" PENTA HEAD BOLTS AT 90° SHALL BE USED. ONE ¾" PENTA HEAD SOCKET AND RATCHET (MINIMUM OF 1) SHALL BE PROVIDED TO NDOT FOR EVERY 10 PULL BOXES.
5. "NDOT FIBER" SHALL BE THE TITLE ENGRAVED IN THE COVER.
6. ALL CONDUITS SHALL HAVE BELL ENDS. INSTALL CONDUIT PLUGS ON EACH CONDUIT OR INNERDUCT ENTERING THE PULL BOX. SEAL ALL CONDUIT ENDS WITH A DUCT SEALING COMPOUND.
7. ALL POWER CONDUCTORS INSIDE PULL BOX SHALL BE TAGGED "POWER".
8. SECURE UNDERGROUND SPLICE CLOSURES IN PULL BOXES USING THE RACKS AND HOOKS. ORIENT THE UNDERGROUND SPLICE CLOSURE SO THE END CAP IS AT LEAST 6" BELOW THE OPPOSITE END.
9. MATCH TOP OF PULL BOX TO FINISHED GRADE.
10. INCLUDE 100 FEET OF SLACK TRUNKLINE AND BRANCH FIBER OPTIC CABLE FOR EACH CABLE ENTERING THE PULL BOX. (i.e., TRUNKLINE TYPICALLY WILL HAVE 200 FEET OF SLACK.)
11. ALL METAL PULL BOX LIDS SHALL BE GROUNDED. INSTALL A STRANDED #4 (GREEN, 7-STRAND) THW WIRE, 4 FEET IN LENGTH, FROM THE LID TO THE BONDING GROUND. FASTEN THE #4 CONDUCTOR TO THE LID BY CAD WELDING.
12. BOXES SHALL BE FURNISHED WITH T-SLOT CABLE RACKS & HOOKS INSTALLED, 2 PER WALL. USE JOSLYN UNDERGROUND CABLE RACKS J5120 SERIES AND JOSLYN CABLE HOOKS J5130A SERIES OR AN APPROVED EQUAL.

TABLE	
ITEM	DESCRIPTION
1	WARNING TAPE
2	FIBER OPTIC CABLE
3	T-SLOT CABLE RACK & HOOK ASSEMBLY
4	90 DEGREE ELBOW, 15" RADIUS
5	POWER CONDUCTORS

See Sheet T-30.1.18 for Details not Shown

SECTION A-A

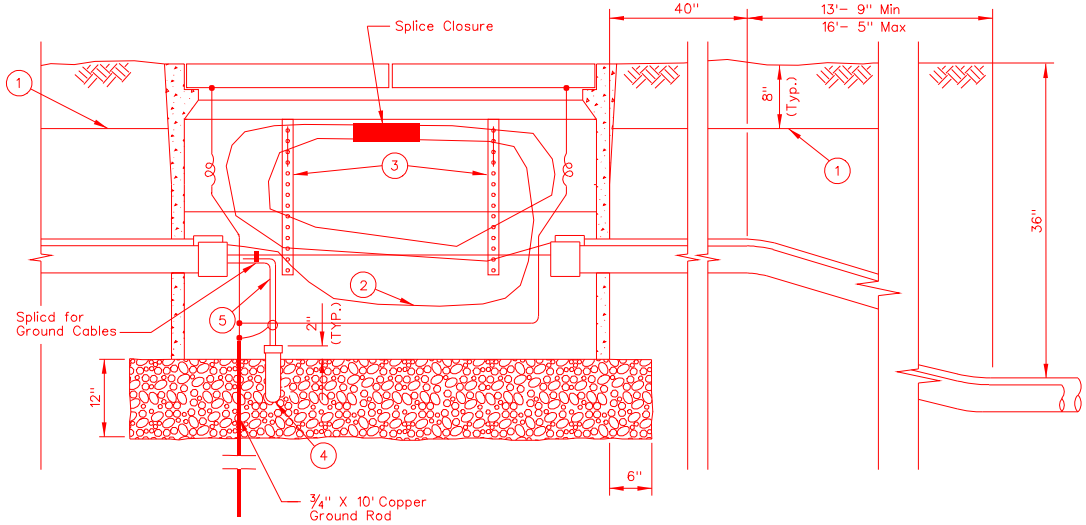

SECTION B-B

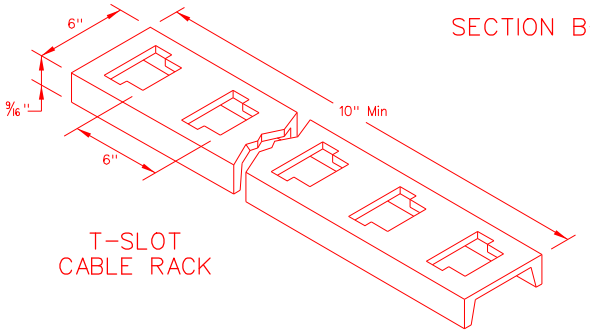

T-SLOT
CABLE RACK

LEGEND:

- DRAIN BACKFILL TYPE II

NEVADA DEPARTMENT OF TRANSPORTATION

ITS CONDUIT
(NO. 9 PULL BOX)
(MODIFIED)

Signed Original On File	M-1.13	(623)
CHIEF OPER/MAINT ENGR.	ADOPTED 5/09	REVISION

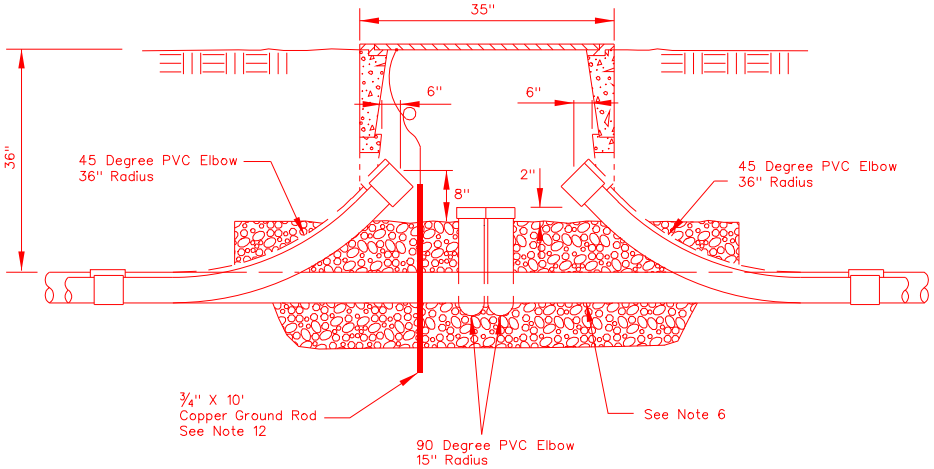

ELEVATION

LEGEND:

- DRAIN BACKFILL TYPE II

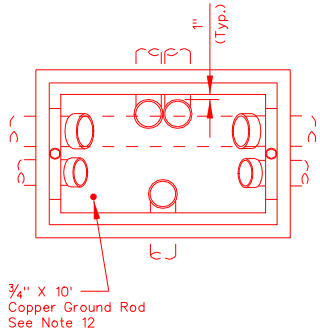

PLAN
(COVER REMOVED)

NOTES:

1. SEE PLAN SHEETS FOR NUMBER AND SIZE OF CONDUIT.
2. IF MORE THAN 3 CONDUITS ARE REQUIRED, KNOCKOUT SHALL BE WIDENED ⅜" MORE THAN THE ADDITIONAL CONDUIT WIDTH.
3. BOTTOM OF CONDUIT CENTERLINE SHALL BE ALIGNED TO EXIT TOP OF PULL BOX TO FACILITATE CABLE PULLING. PER SECTION 623, (PULL BOXES AND JUNCTION/SPLICE BOXES), OF THE STANDARD SPECIFICATIONS.
4. "NDOT FIBER" SHALL BE THE TITLE ENGRAVED IN THE PULL BOX LID.
5. WHEN USED, MULTIDUCT CONDUIT SHALL PASS UNDER PULL BOX EXCEPT AT LOCATIONS WHERE VID CABLES, LOOP LEAD-IN CABLES, RAMP METER SIGNAL CABLES OR BRANCH FIBER OPTIC CABLES ENTER THE MULTIDUCT CONDUIT.
6. USE FELT PAPER TO BLOCK OPENING BETWEEN CONDUITS.
7. PULL BOX HEIGHT ABOVE FINISHED GRADE SHALL PERMIT 4" OF SURFACE LANDSCAPING, IF APPLICABLE, TO MATCH EXISTING CONDITIONS.
8. A PULL BOX EXTENSION CAN BE ELIMINATED IF THE PULL BOX IS SUPPLIED WITH A DEPTH OF 24".
9. INSTALL CONDUIT PLUG ON EACH UNUSED CONDUIT OR INNERDUCT.
10. ALL METAL PULL BOX LIDS SHALL BE GROUNDED. INSTALL A STRANDED #4 (GREEN, 7-STRAND) THW WIRE, 4 FEET IN LENGTH, FROM THE LID TO THE BONDING GROUND. FASTEN THE #4 CONDUCTOR TO THE LID BY CAD WELDING. ALL CONDUITS SHALL HAVE A MINIMUM OF 6" CLEARANCE FROM THE TOP OF THE CONDUIT TO THE LID.
11. SEAL ALL CONDUIT ENDS WITH A DUCT SEALING COMPOUND.
12. SEE STANDARD PLAN SHEET T-30.1.18 FOR DETAILS NOT SHOWN.

PULL BOXES

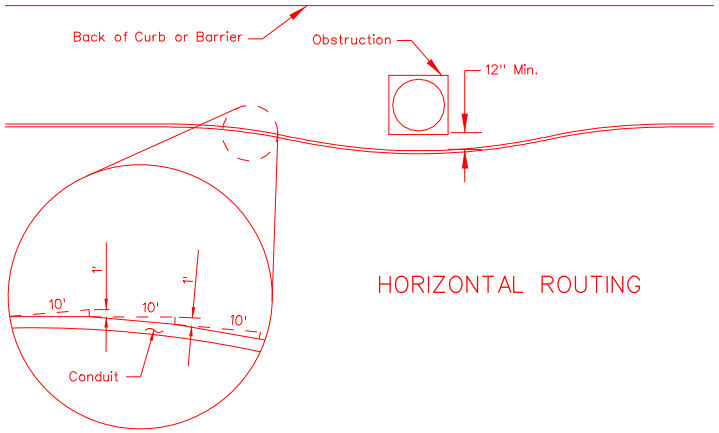

HORIZONTAL ROUTING

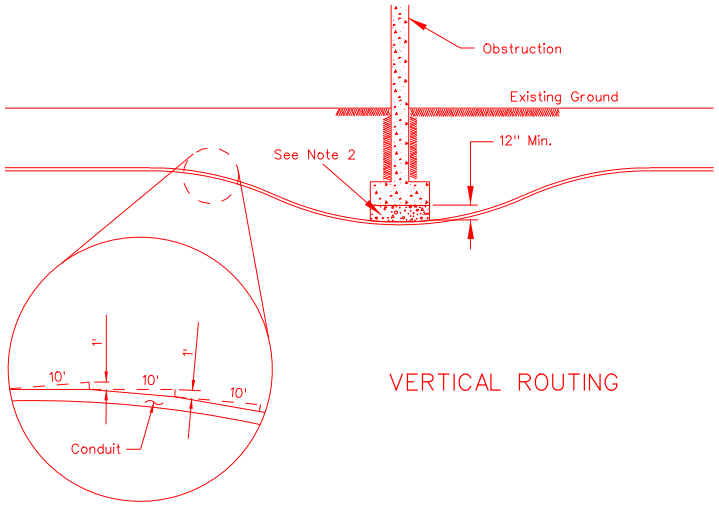

VERTICAL ROUTING

NOTES:

1. CORE DRILLING THROUGH AN OBSTRUCTION MAY BE USED AS AN ALTERNATIVE METHOD, AS DIRECTED BY THE ENGINEER.
2. BACKFILL WITH TWO SACK TYPE B SLURRY CEMENT PER SECTION 207 OF THE STANDARD SPECIFICATIONS.

OBSTRUCTIONS

NEVADA DEPARTMENT OF TRANSPORTATION

ITS CONDUIT CONFIGURATION

Signed Original On File	M-1.14	(623)
CHIEF OPER/MAINT ENGR.	ADOPTED 5/09	REVISION

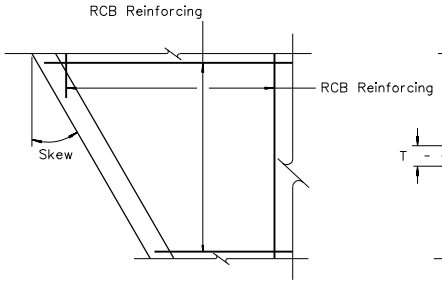

SINGLE SPAN PLAN

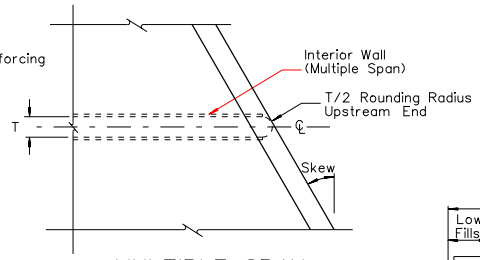

MULTIPLE SPAN PLAN

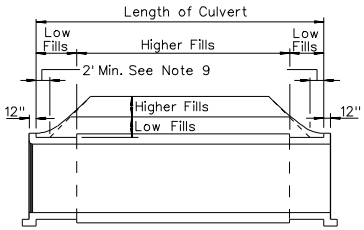

Low Fills = Lowest Table Value for, Given Span
Higher Fills = Slab Increase as Shown in Table

FILL HEIGHT TRANSITIONS ELEVATION

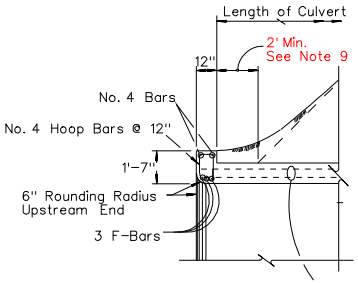

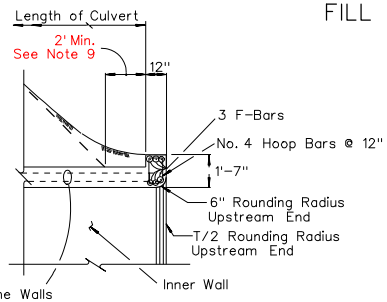

RCB Reinforcing From the Walls and Slabs to Extend into Headwall to 2" Clear of the Headwall Face

SINGLE SPAN MULTIPLE SPAN

ELEVATION

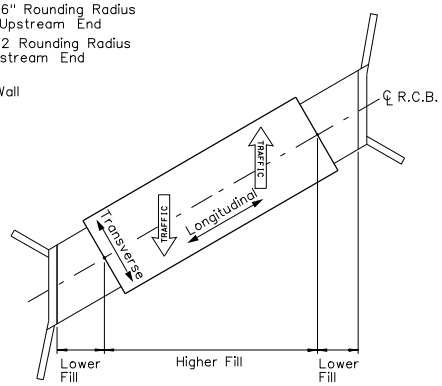

SKEWED PLAN

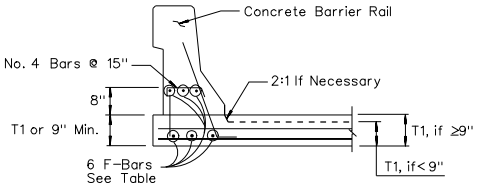

PARAPET DETAILS

COPING REINFORCING INCLUDED IN THE HEADWALL QUANTITIES

SKEWED PARAPETS									
SKEW ANGLE		SPAN	5	6	7	8	10	12	14
0° – 15°	F-BARS	BAR No.	4	5	5	6	7	8	8
16° – 30°	F-BARS	BAR No.	5	6	6	7	8	8	8
31° – 45°	F-BARS	BAR No.	6	6	6	7	8	8	8
0° – 45°	No. 4 HOOPS		12" CTRS.						

GENERAL NOTES:

1. DESIGN SPECIFICATIONS : AASHTO "STANDARD SPECIFICATIONS FOR HIGHWAY BRIDGES, 1977, EXCEPT AS NOTED BELOW.

2. CONSTRUCTION SPECIFICATIONS: STATE OF NEVADA DEPARTMENT OF HIGHWAYS "STANDARD SPECIFICATIONS FOR ROAD AND BRIDGE CONSTRUCTION," CURRENT EDITION, AND SPECIAL PROVISIONS THERETO.

3. LOADING: LIVE LOAD: STANDARD HS20-44 OR ALTERNATE FHWA MILITARY LOADING, IMPACT FOR TOP SLAB IS 30% UP TO 3' COVER, NO IMPACT ABOVE 3' COVER. NO IMPACT FOR INVERT. NO SURCHARGE FOR WALLS.

   EARTH LOAD: EQUIVALENT FLUID PRESSURE FOR TWO CONDITIONS,
   a. 140 LBS./CU. FT. VERTICAL, 42 LBS./CU. FT. HORIZONTAL.
   b. 140 LBS./CU. FT. VERTICAL, 140 LBS./CU. FT. HORIZONTAL.
   LOAD FACTORS: 1.5D + 1.5E + 2.5 (L+I).

4. CONCRETE: THE CONCRETE SHALL HAVE A MINIMUM 28 DAY COMPRESSIVE STRENGTH OF 3,250 PSI. MAXIMUM ALLOWABLE SHEAR, Vc = 3.5 f'c, PSI. TAKEN AT A DISTANCE "d" FROM THE SUPPORTING MEMBER.

5. REINFORCING STEEL: ALL REINFORCING STEEL TO BE ASTM A615 GRADE 60. MAIN REINFORCEMENT IS TO BE PLACED IN THE TRANSVERSE DIRECTION. STAGGER SPLICES NOT SHOWN. HOOKS MAY BE ROTATED OR TILTED, AS NECESSARY, FOR CLEARANCE. REINFORCEMENT SHALL HAVE A 2½" CLEARANCE ON BOTTOM OF BOTTOM SLAB AND 2" CLEARANCE ON REMAINDER OF STRUCTURE AND ITS APPURTENANCES UNLESS OTHERWISE NOTED ON THE PLANS.

6. FOUNDATION PRESSURE: THE RCB CULVERTS ARE DESIGNED TO THE FOLLOWING SOIL BEARING PRESSURES:

COVER HEIGHTS	10 FT.	20 FT.
RCB HEIGHT	TON/SQ.FT.	
6 FT.	1.0	1.6
8 FT.	1.1	1.7
10 FT.	1.2	1.8
12 FT.	1.3	1.9
14 FT.	1.4	2.0

7. SPECIAL DESIGN: CULVERTS WITH CONDITIONS, LOADING, OR SIZES DISSIMILAR TO THOSE GIVEN ON THESE RCB CULVERT SHEETS MAY REQUIRE A SPECIAL DESIGN.

8. DESIGNATION: BOX CULVERTS ARE SHOWN ON PLANS AS SPAN TIMES HEIGHT TIMES LENGTH (10' x 8' x 196' RCB).

9. ADDITIONAL LENGTH: LENGTH OF CULVERT SHALL BE INCREASED AS FOLLOWS: ADD 2' TO EACH END WHEN COVER AT SHOULDER IS 0' TO 5'. ADD AN ADDITIONAL 1' TO EACH END FOR EACH SUCCEEDING 5' OF COVER OR PORTION THEREOF.

10. HEADWALLS: ALL RCB CULVERTS SHALL HAVE TYPE I HEADWALLS UNLESS OTHERWISE NOTED ON THE PLANS.

11. QUANTITIES: QUANTITIES DO NOT INCLUDE "d" BARS, NOR SPLICES IN BARS, NOR TEMPERATURE BARS FOR EXPOSED TOP SLAB, NOR CONCRETE OR REINFORCEMENT FOR PARAPETS OR PAVING LEDGES.

12. THREE OR MORE CELLS: FOR CULVERTS WITH MORE THAN TWO CELLS, USE DIMENSIONS AND REINFORCEMENT FOR THE "DOUBLE BOX CULVERT" AND ADJUST THE QUANTITIES ACCORDINGLY.

NEVADA DEPARTMENT OF TRANSPORTATION

R.C.B., CULVERTS, GENERAL NOTES

Signed Original On File	B-20.1.1 (502,505)	
CHIEF BRIDGE ENGINEER	ADOPTED 11/73	REVISION 1/09

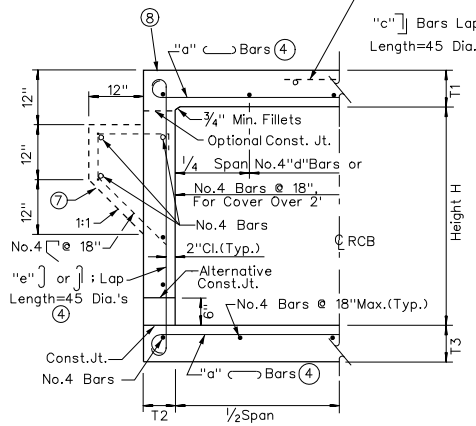

TYPICAL SECTION – SPANS 5' THRU 8'

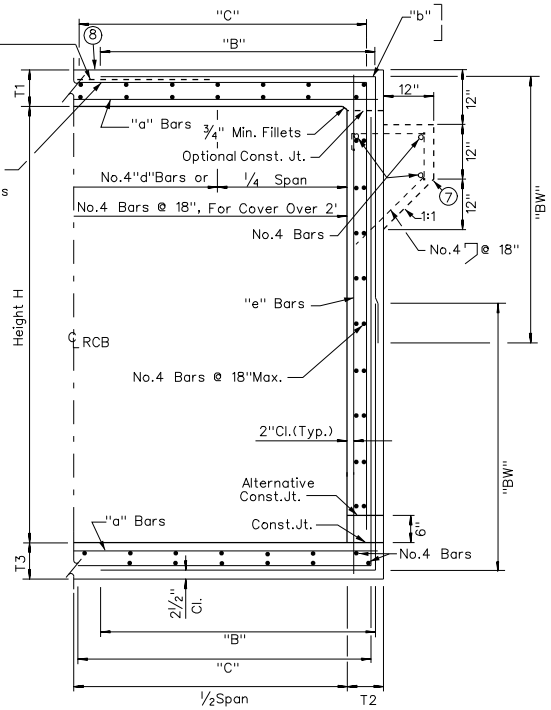

TYPICAL SECTION – SPANS 10' THRU 14'

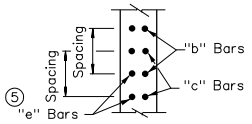

WALL SECTION
SPANS 10' THRU 14'

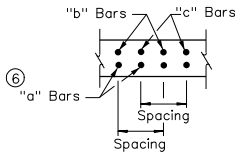

ROOF SECTION
SPANS 10' THRU 14'
Invert Similar

NOTES:

1. FOR BOXES WITH SPAN OR HEIGHT LESS THAN ANY OF THOSE SHOWN IN TABLE, USE NEXT GREATER SIZE BOX CONCRETE DIMENSIONS AND REINFORCEMENT. ADJUST BAR LENGTHS AND RECALCULATE CONCRETE AND REINFORCEMENT QUANTITIES.
2. FOR BOXES WITH SPAN OR HEIGHT OR COVER GREATER THAN THOSE SHOWN IN TABLES, A SPECIAL DESIGN IS REQUIRED.
3. QUANTITIES ARE APPROXIMATE AND FOR DESIGN PURPOSES ONLY.
4. IT IS PERMISSIBLE TO ELIMINATE THE 180° HOOKS ON EVERY OTHER BAR.
5. "e" BARS ARE AT HALF SPACING.
6. "a" BARS ARE AT HALF SPACING.
7. PROVIDE PAVING NOTCH WHEN TOP IS EXPOSED AND WHERE P.C.C. PAVEMENT OR APPROACH SLAB IS USED. ADJUST THE QUANTITIES.
8. WHEN TOP IS EXPOSED, THE TOP SLAB CONCRETE SHALL BE "EA", f'c=4500 PSI, OR "A", f'c=4000 PSI, AS DETERMINED BY THE ENGINEER. IF "EA" CONCRETE IS TO BE USED, THE TOP SLAB REINFORCING STEEL SHALL HAVE AN EPOXY COATING.

SHEET 1 OF 2

NEVADA DEPARTMENT OF TRANSPORTATION

SINGLE
RCB CULVERTS

Signed Original On File	B-20.1.2	(502,505)
CHIEF BRIDGE ENGINEER	ADOPTED 11/70	REVISION 1/09

	SPAN FT.	5						6								7										8											
	HEIGHT FT.	3		4		5		3		4		5		6		3		4		5		6		7		3		4		5		6		7		8	
	MAXIMUM EARTH COVER FT.	10	20	10	20	10	20	10	20	10	20	10	20	10	20	10	20	10	20	10	20	10	20	10	20	10	20	10	20	10	20	10	20	10	20	10	20
CONC.	ROOF T1 IN.	7½	7½	7½	7½	7½	7½	8	8	8	8	8	8	8	8	8	9	8	9	8	9	8½	9	8½	9	8½	9½	8½	9½	8½	9½	8½	9½	8½	10	8½	10
CONC.	WALLS T2 IN.	6	6	6	7	6½	7½	6	6	6	7	6½	7½	7	8½	6	6	6	7	6½	7½	7	8½	8	9½	6	7	6	7	6½	7½	7	8½	8	9½	8½	10½
CONC.	INVERT T3 IN.	6½	7	6½	7	6½	7	7	8	7	8	7	8	7	8	8	9	8	9	8	9	8	9	8	9	8	9½	8	9½	8	10	8	10	8	10	8	10
REINF.	SPACING IN.	8½	5½	8½	5½	8½	5½	7½	5	7½	5	7½	5	7½	4½	6½	5	6½	4½	6½	5½	6½	5½	6½	5½	6	5	6	5	6	5	6	4½	6	5	6	4½
REINF.	"a" BAR NO.	7	6	7	6	7	6	7	6	7	6	7	6	7	6	7	6	7	6	7	7	7	7	7	7	7	7	7	7	7	7	7	7	7	7	7	7
REINF.	"e" BAR NO.	4	4	5	5	6	6	4	4	5	5	6	6	7	6	4	4	5	5	6	6	6	7	7	7	5	5	5	5	5	6	6	6	6	7	7	7
QUAN.	CONCRETE CF/LF	10.0	10.2	11.0	12.0	12.5	13.7	11.7	12.3	12.7	14.2	14.2	15.9	15.9	18.3	13.7	14.9	14.6	16.8	16.1	18.5	18.1	21.0	20.7	23.8	15.4	18.0	16.4	19.0	17.9	21.1	19.5	24.1	22.1	26.9	24.1	30.1
QUAN.	REINFORCEMENT LBS/LF	58	68	67	81	82	105	70	81	82	96	97	120	124	148	94	94	105	118	121	147	130	177	160	192	115	139	123	151	131	171	137	198	160	215	192	252

	SPAN FT.	10																12																	
	HEIGHT FT.	3		4		5		6		7		8		9		10		4		5		6		7		8		9		10		11		12	
	MAXIMUM EARTH COVER FT.	10	20	10	20	10	20	10	20	10	20	10	20	10	20	10	20	10	20	10	20	10	20	10	20	10	20	10	20	10	20	10	20	10	20
CONC.	ROOF T1 IN.	8	10½	8	10½	8	10½	8	10½	8	10½	8	10½	8	10½	8½	11	8½	12	8½	12	8½	12	8½	12	8½	12	8½	12	8½	12	8½	12	9½	12
CONC.	WALLS T2 IN.	8	8	8	8	8	8	8	9	8	9	8	10	8½	11½	9½	12½	8	10	8	10	8	10	8½	10½	8½	10½	8½	11½	9	12½	10½	13½	11½	15
CONC.	INVERT T3 IN.	8	11	8	11	8	11	8	11	8	11	8	11	8	11	8½	11	8½	12½	8½	12½	8½	12½	9	12½	9	12½	9	12½	9	12½	9½	13	10	13
REINFORCEMENT	SPACING IN.	13	12	13	12	13	12	12	12	11	11	10	11	11	10	11	10	9	10	9	10	9	10	9	10	9	10	8	10	8	10	10	9	9	8
REINFORCEMENT	"a" ⑥ BAR NO.	6	7	6	7	6	7	6	7	6	7	6	7	6	6	6	6	6	7	6	7	6	7	6	7	6	7	6	7	6	7	6	6	6	6
REINFORCEMENT	"b" BAR NO.	6	7	6	7	6	7	6	7	6	7	6	7	6	6	7	7	6	7	6	7	6	7	6	7	6	7	6	7	6	7	7	7	6	7
REINFORCEMENT	"b" DIMENSION "B" FT. – IN.	2–10	2–11	2–10	2–11	2–11	2–11	2–11	3	2–11	3–9	2–11	3–9	2–11	3–9	2–11	3–9	3–1	3–2	3–1	3–2	3–1	3–2	3–9	3–9	3–9	3–9	3–7	3–9	3–7	4–4	3–7	4–4	4–4	4–4
REINFORCEMENT	"b" DIMENSION "BW" FT. – IN.	2–10	3	2–10	3	4–10	5	4–10	5	4–10	5	4–10	5	4–10	5	4–7	4–7	4	4	4	4	6	5–10	6–2	6–7	6–2	6–7	4–11	4–11	4–11	4–11	4–11	4–11	4–4	4–4
REINFORCEMENT	"c" BAR NO.	6	7	6	7	6	7	6	7	6	7	6	7	7	7	7	7	6	7	6	7	6	7	6	7	6	7	6	7	6	7	7	7	7	7
REINFORCEMENT	"c" DIMENSION "C" FT. – IN.	3–4	3–4	3–4	3–4	3–4	3–4	7–4	4–8	7–7	4–8	8–2	4–8	7–7	4–8	7–7	4–8	4-4	4-4	4-4	4-4	4-4	3-7	8-1	5-7	8-1	5-7	8-1	5-7	8-1	5-7	8-1	5-7	8-1	5-7
REINFORCEMENT	"e" ⑤ BAR NO.	4	4	4	4	4	4	4	4	4	4	4	4	4	4	5	5	4	4	4	4	4	4	4	4	4	4	4	4	4	4	5	5	5	5
QUAN	CONCRETE CF/LF	19.1	24.3	20.4	25.6	21.6	26.8	23.0	29.5	24.3	31.0	25.6	34.1	27.8	37.7	32.1	42.3	24.2	34.6	25.5	36.2	26.8	37.7	29.3	40.1	30.3	41.9	32.2	45.4	34.5	49.8	40.7	54.2	45.4	59.9
QUAN	REINFORCEMENT LBS/LF	161	230	169	237	191	267	233	285	260	325	300	339	314	327	360	373	271	331	278	339	295	362	353	409	365	420	402	413	415	424	440	471	468	534

	SPAN FT.	14													
	HEIGHT FT.	7		8		9		10		11		12		13		14	
	MAXIMUM EARTH COVER FT.	10	20	10	20	10	20	10	20	10	20	10	20	10	20	10	20
CONC.	ROOF T1 IN.	9½	14	9½	14	9½	14	9½	14	10	14	10	14	10½	14	11	14
CONC.	WALLS T2 IN.	9½	11	9½	11½	9½	11½	10	12½	10½	14	11½	15	12½	16½	13½	17½
CONC.	INVERT T3 IN.	10	14½	10	14½	10	14½	10	14½	10½	14½	10½	15	11	15	11½	15
REINFORCEMENT	SPACING IN.	10	9	10	9	10	8	10	8	10	8	8	10	10	10	10	9
REINFORCEMENT	"a" ⑥ BAR NO.	7	7	7	7	7	7	7	7	7	7	6	7	6	7	6	7
REINFORCEMENT	"b" BAR NO.	6	7	7	7	7	7	7	7	7	7	6	8	7	8	7	8
REINFORCEMENT	"b" DIMENSION "B" FT.– IN.	2–9	4–2	3–4	4–4	3–4	4–6	3–4	4–6	3–6	4–6	3–6	4–6	3–6	4–6	4–9	6
REINFORCEMENT	"b" DIMENSION "BW" FT.– IN.	6–5	7	7	8–4	7	8–4	6	6	6	6	6	6	5	6	4–6	6
REINFORCEMENT	"c" BAR NO.	7	7	7	7	7	7	7	7	7	7	7	8	8	8	8	8
REINFORCEMENT	"c" DIMENSION "C" FT.– IN.	4	4–2	6–9	6–9	5–10	5–10	6	6–4	8–11	6–4	8–11	6–4	8–11	6–4	8–11	6–4
REINFORCEMENT	"e" ⑤ BAR NO.	4	4	4	4	4	4	4	4	4	4	4	5	6	6	6	6
QUAN	CONCRETE CF/LF	36.2	51.0	37.8	53.1	39.5	54.9	41.9	58.7	45.9	64.1	49.9	69.5	55.6	75.8	61.6	81.3
QUAN	REINFORCEMENT LBS/LF	374	471	449	522	446	587	449	580	492	596	537	605	564	634	604	759

"d" BARS, FOR EARTH COVERS OF 2' AND LESS TO BE PLACED IN TOP SLAB ONLY							
SPAN	5'	6'	7'	8'	10'	12'	14'
NUMBER of BARS	6	7	8	9	10	12	16

SHEET 2 OF 2

NEVADA DEPARTMENT OF TRANSPORTATION

SINGLE
RCB CULVERTS

Signed Original On File

CHIEF BRIDGE ENGINEER

B-20.1.2.1 (502,505)

ADOPTED 11/70 REVISION 1/09

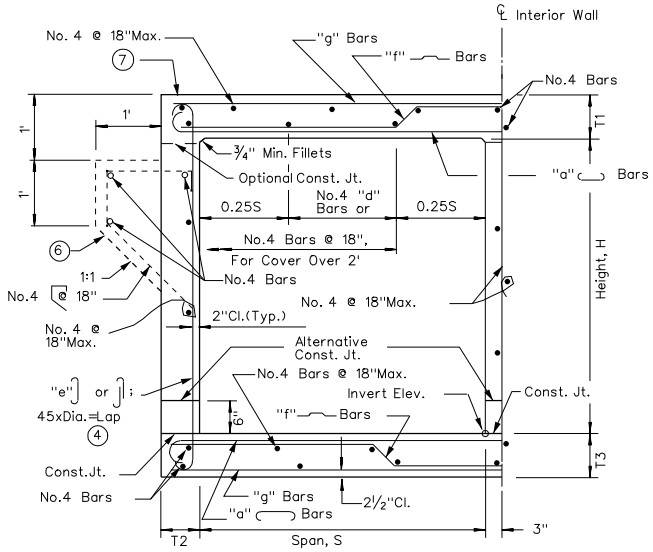

TYPICAL SECTION – SPANS 5' THRU 8'

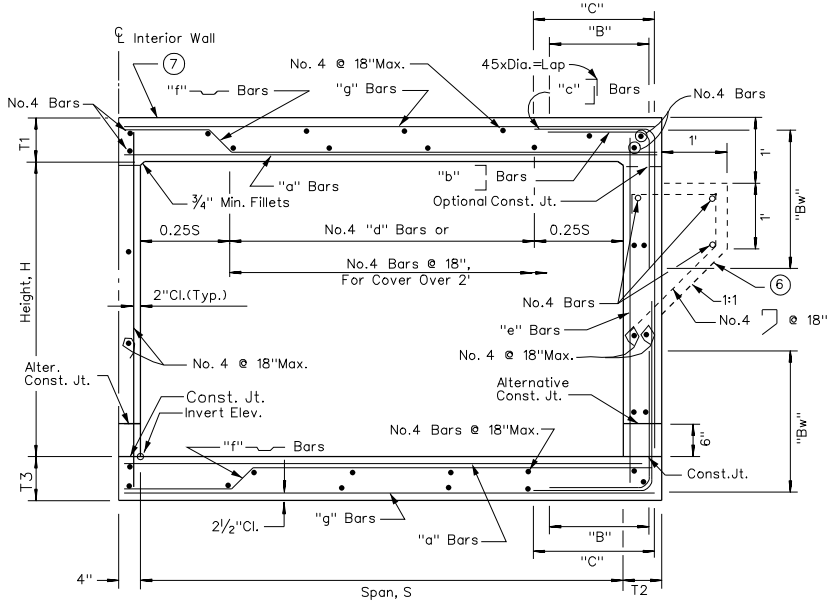

TYPICAL SECTION – SPANS 10' THRU 14'

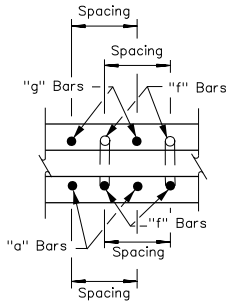

ROOF SECTION
SPANS 5' THRU 8'
INVERT SIMILAR

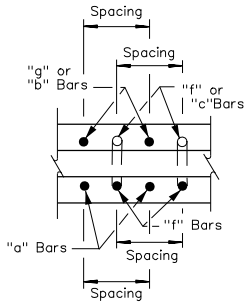

ROOF SECTION
SPANS 10' THRU 14'
INVERT SIMILAR

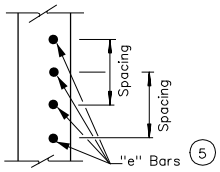

EXTERIOR
WALL SECTION
SPANS 5' THRU 8'

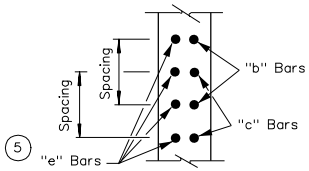

EXTERIOR
WALL SECTION
SPANS 10' THRU 14'

NOTES:

1. FOR BOXES WITH SPAN OR HEIGHT LESS THAN ANY OF THOSE SHOWN IN TABLE, USE NEXT GREATER SIZE BOX CONCRETE DIMENSIONS AND REINFORCEMENT, MAKE NECESSARY CHANGES IN BAR LENGTHS AND QUANTITIES.
2. FOR BOXES WITH SPAN OR HEIGHT OR COVER GREATER THAN THOSE SHOWN IN TABLES, A SPECIAL DESIGN IS REQUIRED.
3. QUANTITIES ARE APPROXIMATE AND FOR DESIGN PURPOSES ONLY.
4. IT IS PERMISSIBLE TO ELIMINATE THE 180° HOOKS ON EVERY OTHER "e" BAR.
5. "e" BARS ARE AT HALF SPACING.
6. PROVIDE PAVING NOTCH WHEN TOP IS EXPOSED AND WHERE P.C.C. PAVEMENT OR APPROACH SLAB IS USED. ADJUST THE QUANTITIES.
7. WHEN TOP IS EXPOSED, THE TOP SLAB CONCRETE SHALL BE "EA", f'c=4500 PSI, OR "A", f'c=4000 PSI, AS DETERMINED BY THE ENGINEER. IF "EA" CONCRETE IS TO BE USED, THE TOP SLAB REINFORCING STEEL SHALL HAVE AN EPOXY COATING.

NOTE: THIS PLAN SHEET MAY BE USED FOR MULTIPLE CELL CULVERTS BY MAKING NECESSARY ADJUSTMENTS.

SHEET 1 OF 2

NEVADA DEPARTMENT OF TRANSPORTATION

DOUBLE
RCB CULVERTS

Signed Original On File	B-20.1.3	(502)
CHIEF BRIDGE ENGINEER	ADOPTED 11/70	REVISION 1/09

	SPAN	FT.	5						6							
	HEIGHT	FT.	3		4		5		3		4		5		6	
	MAXIMUM EARTH COVER	FT.	10	20	10	20	10	20	10	20	10	20	10	20	10	20
CONC	ROOF T1	IN.	7	7½	7	7½	7	7½	7	9	7	9	7	9	7	9
CONC	EXTERIOR WALL T2	IN.	6	6	6	7	6½	7½	6	6	6	7	6½	8	7	8½
CONC	INVERT T3	IN.	7	8	7	8	7	8	7	9	7	9	7	9	7	9
REINF	SPACING	IN.	11½	14	11½	14	11½	15	11½	12	11½	12	11½	12	11½	12
REINF	"g" BAR NO.		4	7	4	7	4	7	6	7	6	7	6	7	6	7
REINF	"f" BAR NO.		5	5	5	5	5	5	5	5	5	5	5	5	5	5
REINF	"a" BAR NO.		6	4	6	4	6	4	7	4	7	4	7	4	7	4
REINF	"e" ⑤ BAR NO.		4	5	5	6	5	7	4	5	4	6	5	6	6	7
QUAN	CONCRETE	CF/LF	17.8	19.3	19.3	21.6	21.3	23.8	20.1	24.6	21.6	27.0	23.6	29.7	25.8	32.2
QUAN	REINFORCEMENT	LBS/LF	122	121	134	137	145	162	186	162	192	179	206	190	227	212

"d" BARS, FOR EARTH COVERS OF 2' AND LESS TO BE PLACED IN TOP SLAB ONLY

SPAN	5'	6'	7'	8'	10'	12'	14'
# /CELL	5	6	8	10	11	13	15

	SPAN	FT.	7										8									
	HEIGHT	FT.	3		4		5		6		7		3		4		5		6		7		8	
	MAXIMUM EARTH COVER	FT.	10	20	10	20	10	20	10	20	10	20	10	20	10	20	10	20	10	20	10	20	10	20
CONC	ROOF T1	IN.	7½	10	7½	10	7½	10	7½	10	8	10	8	11	8	11	8	11	8	11	8	11	8	11
CONC	EXTERIOR WALL T2	IN.	6	6	6	7	6½	7½	7	9	8	9½	6	7½	6	7½	6½	8	7	9	8	10	8½	11
CONC	INVERT T3	IN.	7½	10½	7½	10½	7½	10½	7½	10½	7½	10½	8	11½	8	11½	8	11½	8	11½	8	11½	8	11½
REINF	SPACING	IN.	11	10½	11	10½	11	10½	11	10½	11	10½	9	10	9	10	9	10	9	10	9	10	9	10
REINF	"g" BAR NO.		6	7	6	7	6	7	6	7	6	7	7	7	7	7	7	7	7	7	7	7	7	7
REINF	"f" BAR NO.		6	5	6	5	6	5	6	5	6	5	5	5	5	5	5	5	5	5	5	5	5	5
REINF	"a" BAR NO.		6	4	6	4	6	4	6	4	6	4	6	4	6	4	6	4	6	4	6	4	6	4
REINF	"e" ⑤ BAR NO.		4	5	5	5	5	6	6	7	6	7	4	5	4	5	5	6	6	6	6	7	6	7
QUAN	CONCRETE	CF/LF	23.7	30.8	25.2	33.3	27.2	35.5	29.4	39.1	32.4	41.8	27.8	38.5	29.2	40.1	31.2	42.4	33.4	45.5	36.4	48.9	39.0	52.6
QUAN	REINFORCEMENT	LBS/LF	207	197	220	208	227	228	252	262	260	276	270	224	283	237	302	266	340	279	350	312	360	326

	SPAN	FT.	10																			
	HEIGHT	FT.	3		4		5		6		7		8		9		10					
	MAXIMUM EARTH COVER	FT.	10	20	10	20	10	20	10	20	10	20	10	20	10	20	10	20				
CONC	ROOF T1	IN.	9	12 1/2	9	12 1/2	9	12 1/2	9	12 1/2	9	12 1/2	9	12 1/2	9	12 1/2	9 1/2	12 1/2	9 1/2	12 1/2		
CONC	EXTERIOR WALLS T2	IN.	8	8	8	8	8	8	8	8	8	8 1/2	8	9 1/2	8	10 1/2	8 1/2	11 1/2	9 1/2	12 1/2		
CONC	INVERT T3	IN.	9	12 1/2	9	12 1/2	9	12 1/2	9	12 1/2	9	12 1/2	9	12 1/2	9	12 1/2	9	12 1/2	9	12 1/2		
REINFORCEMENT	SPACING	IN.	11	7 1/2	11	7 1/2	11	7 1/2	10 1/2	7 1/2	10 1/2	8	10	8	10	8	10 1/2	8	10 1/2	8 1/2		
REINFORCEMENT	"g" BARNO.		7	7	7	7	7	7	7	7	7	7	7	7	7	7	7	7	7	7		
REINFORCEMENT	"f" BARNO.		7	5	7	5	7	5	6	5	6	5	6	5	6	5	6	5	6	5		
REINFORCEMENT	"a" BARNO.		4	4	4	4	4	4	4	4	4	4	4	4	4	4	4	4	4	4		
REINFORCEMENT	"b" BARNO.		5	5	5	5	5	5	4	5	5	5	6	5	6	5	6	6	6	6		
REINFORCEMENT	"b" DIMENSION "B" FT.-IN.		1-9	2-7	1-9	2-7	1-9	2-7	2	2-9	2-3	2-9	2-7	3-1	2-7	3-1	2-7	3-1				
REINFORCEMENT	"b" DIMENSION "Bw" FT.-IN.		3-6	3-10	3-6	3-10	4	4-11	4	4-11	4	4-11	4	4-11	4	4-11	4	4-11				
REINFORCEMENT	"c" BARNO.		5	5	5	5	5	5	6	6	6	6	6	6	7	6	7	6				
REINFORCEMENT	"c" DIMENSION "C" FT.-IN.		3	2-9	3-0	2-9	3-1	2-9	3-9	3-3	4-6	4-3	5-6	4-6	6	4-9	6	4-9				
REINFORCEMENT	"e" ⑤ BARNO.		4	4	4	4	4	4	4	4	4	4	4	4	4	4	5	5				
QUAN	CONCRETE	CF/LF	39.0	51.8	41.0	53.8	42.7	55.6	44.7	58.2	46.7	61.8	48.7	65.6	52.5	70.0	56.3	74.5				
QUAN	REINFORCEMENT	LBS/LF	339	415	349	428	370	454	381	494	418	494	460	510	486	550	518	568				

	SPAN	FT.	12																			
	HEIGHT	FT.	4		5		6		7		8		9		10		11		12			
	MAXIMUM EARTH COVER	FT.	10	20	10	20	10	20	10	20	10	20	10	20	10	20	10	20	10	20		
CONC	ROOF T1	IN.	10	14 1/2	10	14 1/2	10	14 1/2	10	14 1/2	10	14 1/2	10	14 1/2	10	14 1/2	10	14 1/2	10	14 1/2		
CONC	EXTERIOR WALLS T2	IN.	8	8 1/2	8	8 1/2	8	8 1/2	8	9	8 1/2	10 1/2	9	11 1/2	9 1/2	12 1/2	10	14	11	15		
CONC	INVERT T3	IN.	10	15	10	15	10	15	10	15	10	15	10	15	10	15	10	15	10	15		
REINFORCEMENT	SPACING	IN.	9	8	9	8	9	8	9	8	8	7 1/2	8	7 1/2	8 1/2	7 1/2	8 1/2	8	8 1/2	8		
REINFORCEMENT	"g" BARNO.		7	7	7	7	7	7	7	7	7	7	7	7	7	7	7	7	7	7		
REINFORCEMENT	"f" BARNO.		7	7	7	7	7	7	7	7	6	6	6	6	6	6	6	6	6	6		
REINFORCEMENT	"a" BARNO.		4	4	4	4	4	4	4	4	4	4	4	4	4	4	4	4	4	4		
REINFORCEMENT	"b" BARNO.		5	5	5	5	5	5	5	6	5	6	5	6	6	6	5	6	6	6		
REINFORCEMENT	"b" DIMENSION "B" FT.- IN.		2-7	3-1	2-7	3-1	2-7	3-1	3	3-2	3-6	3-2	3-6	3-4	3-9	3-4	3-9	3-4	3-9	3-4		
REINFORCEMENT	"b" DIMENSION "Bw" FT.- IN.		4-1	3-2	4-1	3-2	4-1	3-2	4-1	3-4	4-1	3-4	4-1	3-7	3-9	3-7	3-9	3-7	3-7	3-7		
REINFORCEMENT	"c" BARNO.		6	6	6	6	6	6	6	6	6	6	6	6	6	6	7	7	7	7		
REINFORCEMENT	"c" DIMENSION "C" FT.- IN.		3-10	3-7	3-10	3-7	3-10	3-7	4-6	4-4	5-7	5	6-6	5-2	7-2	5-4	7-5	5-7	7-5	5-7		
REINFORCEMENT	"e" ⑤ BARNO.		4	4	4	4	4	4	4	4	4	4	4	4	4	4	5	5	5	5		
QUAN	CONCRETE	CF/LF	51.3	72.4	53.3	73.4	55.0	76.3	57.0	79.1	59.8	83.8	62.7	88.1	65.9	92.7	69.1	98.8	73.7	104		
QUAN	REINFORCEMENT	LBS/LF	505	567	514	577	543	604	563	646	600	663	614	688	627	691	701	749	733	764		

	SPAN	FT.	14																			
	HEIGHT	FT.	7		8		9		10		11		12		13		14					
	MAXIMUM EARTH COVER	FT.	10	20	10	20	10	20	10	20	10	20	10	20	10	20	10	20				
CONC	ROOF T1	IN.	11 1/2	16 1/2	11 1/2	16 1/2	11 1/2	16 1/2	11 1/2	16 1/2	11 1/2	16 1/2	11 1/2	16 1/2	11 1/2	16 1/2	11 1/2	16 1/2				
CONC	EXTERIOR WALLS T2	IN.	8 1/2	9 1/2	8 1/2	10 1/2	9	11 1/2	9 1/2	12 1/2	10 1/2	14	11 1/2	15	12 1/2	16 1/2	13	17 1/2				
CONC	INVERT T3	IN.	11 1/2	17	11 1/2	17	11 1/2	17	11 1/2	17	11 1/2	17	11 1/2	17	11 1/2	17	11 1/2	17				
REINFORCEMENT	SPACING	IN.	8 1/2	8	8 1/2	8	8 1/2	8	8 1/2	8	8 1/2	8	8 1/2	8	9	8	9	8				
REINFORCEMENT	"g" BARNO.		8	8	8	8	8	8	8	8	8	8	8	8	8	8	8	8				
REINFORCEMENT	"f" BARNO.		6	6	6	6	6	6	6	6	6	6	6	6	6	6	6	6				
REINFORCEMENT	"a" BARNO.		4	4	4	4	4	4	4	4	4	4	4	4	4	4	4	4				
REINFORCEMENT	"b" BARNO.		5	6	6	6	5	6	6	6	6	6	6	7	7	7	7	7				
REINFORCEMENT	"b" DIMENSION "B" FT.- IN.		2-7	2-7	3-3	3-3	4	4	4	4	4-7	4-4	4-7	4-4	4-7	4-4	4-7	4-4				
REINFORCEMENT	"b" DIMENSION "Bw" FT.- IN.		5	3-9	5	4-6	5	5	5	5	4-9	5-6	4-9	5-6	4-6	5-6	4-4	5-6				
REINFORCEMENT	"c" BARNO.		6	6	6	7	7	7	7	7	7	7	7	7	7	7	8	8				
REINFORCEMENT	"c" DIMENSION "C" FT.- IN.		4-3	3-11	5-6	4-6	7	5	7-9	5-9	8-6	6-3	9	6-9	9-3	6-9	9-3	6-9				
REINFORCEMENT	"e" ⑤ BARNO.		4	4	4	4	4	4	4	4	4	4	5	5	5	5	6	6				
QUAN	CONCRETE	CF/LF	71.8	99.7	73.9	104	76.9	108	80.0	113	84.2	119	88.8	124	94.1	131	98.1	137				
QUAN	REINFORCEMENT	LBS/LF	662	710	715	783	756	820	807	846	833	873	881	958	884	978	1002	1110				

SHEET 2 OF 2

NEVADA DEPARTMENT OF TRANSPORTATION

DOUBLE
RCB CULVERTS

Signed Original On File
CHIEF BRIDGE ENGINEER

B-20.1.3.1 (502)
ADOPTED 11/70 REVISION 1/09

	SPAN FT.	5						6							
	HEIGHT FT.	3		4		5		3		4		5		6	
	MAXIMUM EARTH COVER FT.	10	20	10	20	10	20	10	20	10	20	10	20	10	20
QUAN	CONCRETE CF/LF	7.9	8.6	8.4	9.1	8.9	9.6	9.1	11.3	9.6	11.8	10.1	12.3	10.6	12.8
QUAN	REINF. LBS/LF	56	54	58	57	60	56	81	68	83	70	86	73	88	75

	SPAN FT.	7										8											
	HEIGHT FT.	3		4		5		6		7		3		4		5		6		7		8	
	MAXIMUM EARTH COVER FT.	10	20	10	20	10	20	10	20	10	20	10	20	10	20	10	20	10	20	10	20	10	20
QUAN	CONCRETE CF/LF	10.9	14.3	11.4	14.8	11.9	15.3	12.4	15.8	13.2	16.3	12.8	17.4	13.3	17.9	13.8	18.4	14.3	18.9	14.8	19.4	15.3	19.9
QUAN	REINF. LBS/LF	102	94	104	96	107	98	109	100	110	101	133	106	135	108	137	111	139	113	140	114	142	116

	SPAN FT.	10															
	HEIGHT FT.	3		4		5		6		7		8		9		10	
	MAXIMUM EARTH COVER FT.	10	20	10	20	10	20	10	20	10	20	10	20	10	20	10	20
QUAN	CONCRETE CF/LF	18.0	24.2	18.7	24.9	19.3	25.6	20.0	26.2	20.7	26.9	21.3	27.6	22.5	28.2	23.1	28.9
QUAN	REINF. LBS/LF	141	160	142	161	144	163	139	165	145	158	147	160	144	162	145	156

	SPAN FT.	12															
	HEIGHT FT.	4		5		6		7		8		9		10		11		12	
	MAXIMUM EARTH COVER FT.	10	20	10	20	10	20	10	20	10	20	10	20	10	20	10	20	10	20
QUAN	CONCRETE CF/LF	23.8	33.8	24.4	34.5	25.1	35.1	25.8	35.8	26.4	36.5	27.1	37.1	27.8	37.8	28.4	38.5	29.1	39.1
QUAN	REINF. LBS/LF	196	219	198	221	201	223	201	224	203	216	205	218	196	219	199	210	201	212

	SPAN FT.	14															
	HEIGHT FT.	7		8		9		10		11		12		13		14	
	MAXIMUM EARTH COVER FT.	10	20	10	20	10	20	10	20	10	20	10	20	10	20	10	20
QUAN	CONCRETE CF/LF	32.8	45.6	33.4	46.3	34.1	46.9	34.8	47.6	35.4	48.3	36.1	48.9	36.8	49.6	37.4	50.3
QUAN	REINF. LBS/LF	246	261	249	264	251	266	252	267	254	269	256	271	246	272	248	274

NOTES:

1. NOTES 1, 2, 3 & 7 OF SHEET B-20.1.3 SHALL APPLY.
2. WHEN THE ADDITION OF CELLS CAUSES THE LENGTHS OF THE "a", "f" AND "g" BARS TO EXCEED 60 FEET. THE BARS WILL REQUIRE SPLICING. SPLICES FOR THE "a" BARS SHALL BE CENTERED ABOUT THE CENTER LINE OF THE INTERIOR WALLS. SPLICES FOR THE "g" BARS SHALL BE CENTERED ABOUT THE CENTER OF THE CELLS. SPLICES FOR THE "f" BARS SHALL BE DONE AT THE 45 DEGREE LEG AND CONFORM TO THE SPLICE DETAIL SHOWN. SPLICE LOCATIONS SHALL BE ALTERNATED FROM BAR TO BAR. SEE DETAIL SHOWN. SPLICE LENGTHS FOR THE "a" AND "g" BARS SHALL BE AS FOLLOWS:
   - No.4 BARS – 16 INCHES
   - No.6 BARS – 24 INCHES
   - No.7 BARS – 31 INCHES
   - No.8 BARS – 40 INCHES

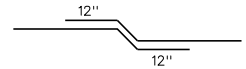

"F" BAR SPLICE DETAIL

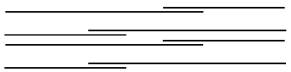

ALTERNATING SPLICE DETAIL

3. FOR DIMENSIONS, BAR SIZES, BAR SPACING, AND ROOF SECTION SPACING DETAIL SEE SHEET B-20.1.3.
4. FOR GENERAL NOTES SEE SHEET B-20.1.1.

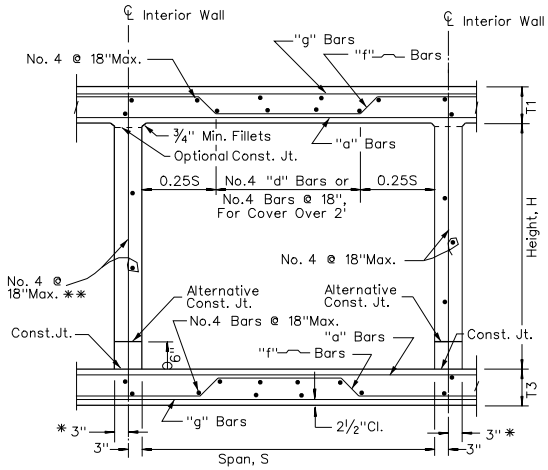

TYPICAL SECTION – SPANS 5' THRU 8'

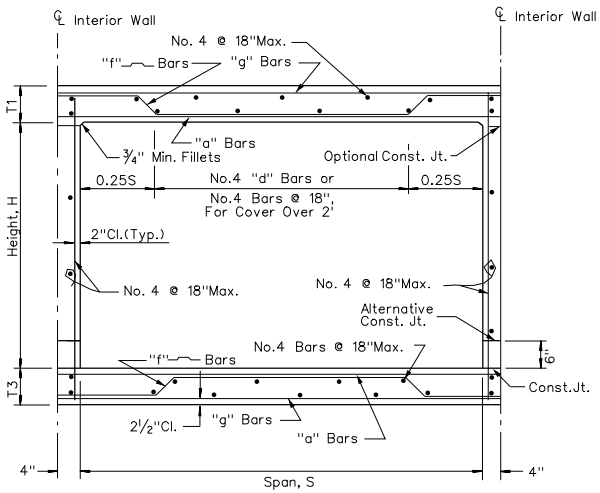

TYPICAL SECTION – SPANS 10' THRU 14'

LEGEND:

* – CONCRETE FOR THIS PORTION IS INCLUDED IN QUANTITIES OF ADJOINING CELLS.

** – REINFORCING STEEL INCLUDED IN PREVIOUS CELLS QUANTITIES.

NEVADA DEPARTMENT OF TRANSPORTATION

ADDITIONAL CELLS TO BE USED WITH DOUBLE RCB CULVERTS TO PROVIDE FOR MULTIPLE CELL CULVERTS

Signed Original On File	B-20.1.3.2	(502)
CHIEF BRIDGE ENGINEER	ADOPTED 8/84	REVISION 1/09

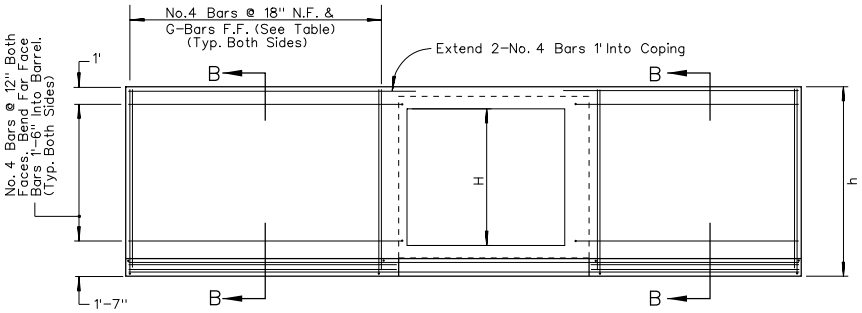

ELEVATION

NOTES:

1. FOR GENERAL NOTES SEE SHEET B-20.1.1.
2. FOR QUANTITIES SEE SHEET B-20.1.4.1

TABLE

H = HEIGHT FEET	T = INCHES	TB = INCHES	G-BARS		F-BARS	
			SIZE NO.	SPACE INCHES	SIZE NO.	SPACE INCHES
3	8	8	5	9 1/2	4	12
4	8	8	5	9 1/2	4	12
5	9	9	6	9 1/2	4	11
6	10	10	7	10	4	6 1/2
7	12	12	7	8 1/2	5	7 1/2
8	12	13	7	6 1/2	6	8
9	12	14	7	7	6	7 1/2
10	12	16	8	6 1/2	8	10
12	12	20	9	7	8	8 1/2

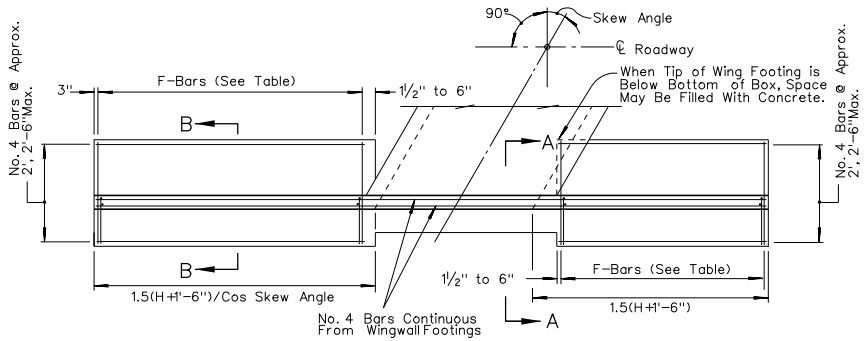

WING B

WING A

PLAN

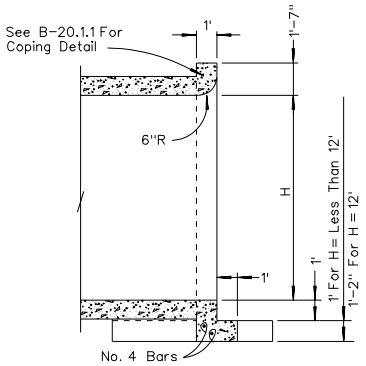

SECTION A-A

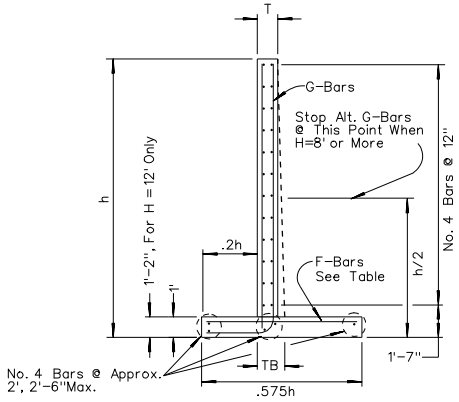

SECTION B-B

SHEET 1 OF 2

NEVADA DEPARTMENT OF TRANSPORTATION

RCB CULVERTS
TYPE II HEADWALLS

Signed Original On File	B-20.1.4	(502,505)
CHIEF BRIDGE ENGINEER	ADOPTED 1/70	REVISION 1/05

① – QUANTITIES SHOWN ARE FOR TWO HEADWALLS AT THE INLET AND OUTLET

CUBIC YARDS OF CONCRETE AND POUNDS OF REINFORCING FOR TWO TYPE II HEADWALLS ①

SPAN	HEIGHT	SINGLE BOX								DOUBLE BOX								TRIPLE BOX								HEIGHT	SPAN
		0° SKEW		15° SKEW		30° SKEW		45° SKEW		0° SKEW		15° SKEW		30° SKEW		45° SKEW		0° SKEW		15° SKEW		30° SKEW		45° SKEW			
		CONC.	REINF.	CONC.	REINF.	CONC.	REINF.	CONC.	REINF.	CONC.	REINF.	CONC.	REINF.	CONC.	REINF.	CONC.	REINF.	CONC.	REINF.	CONC.	REINF.	CONC.	REINF.				
5	3	9.4	871	9.4	888	10.2	947	11.5	1073	11.4	991	11.6	1013	12.4	1085	14.3	1243									3	5
	4	12.8	1141	12.8	1163	13.5	1237	15.6	1399	14.8	1261	15.0	1287	15.9	1376	18.6	1568	16.8	1367	17.0	1397	18.5	1498	21.4	1718	4	
	5	16.4	1676	16.6	1707	17.5	1813	19.8	2044	18.6	1795	18.6	1831	19.9	1952	22.8	2214	20.6	1901	20.8	1941	22.3	2074	25.6	2364	5	
6	3	9.8	886	9.8	903	10.6	963	12.1	1094	12.2	1094	12.2	1119	13.2	1204	15.3	1389									3	6
	4	13.2	1155	13.2	1178	14.1	1254	16.2	1419	15.4	1364	15.6	1393	16.7	1495	19.4	1714	17.8	1536	18.0	1572	19.5	1693	22.8	1957	4	
	5	16.8	1690	17.8	1722	18.9	1830	20.5	2064	20.0	1898	20.4	1937	21.7	2071	24.8	2360	22.4	2070	22.8	2116	24.5	2269	28.2	2603	5	
	6	25.8	2598	26.1	2646	27.6	2808	31.1	3160	27.8	2806	28.5	2861	30.2	3049	34.5	3456	30.4	2978	31.1	3040	33.0	3247	38.3	3699	6	
	7	32.0	3666	32.3	3733	34.2	3960	38.6	4453																	7	
7	3	10.2	900	10.2	918	11.0	980	12.5	1114																	3	7
	4	13.6	1170	13.6	1193	14.5	1270	16.6	1439																	4	
	5	17.2	1704	17.3	1736	19.3	1846	20.9	2085																	5	
	6	26.2	2612	26.3	2660	28.0	2824	31.7	3181																	6	
	7	32.2	3682	32.7	3750	34.6	3978	39.0	4485																	7	
8	3	10.6	914	10.6	933	11.4	996	13.1	1134	13.8	1296	14.0	1328	15.2	1437	17.1	1675									3	8
	4	14.0	1184	14.0	1207	14.9	1287	17.0	1460	17.0	1566	17.2	1602	18.5	1728	21.6	2000	20.2	1830	20.4	1876	24.1	2033	26.0	2373	4	
	5	17.6	1718	17.7	1751	18.8	1863	21.3	2105	20.8	2100	20.9	2146	22.6	2304	25.9	2646	24.8	2364	25.1	2420	27.0	2609	31.5	3019	5	
	6	26.4	2626	26.7	2675	28.4	2841	32.1	3201	29.2	3008	29.9	3070	31.8	3282	36.3	3742	32.4	3272	33.1	3344	35.4	3587	40.9	4115	6	
	7	32.8	3697	33.0	3765	34.9	3995	39.3	4496	35.8	4067	36.2	4147	38.5	4422	43.7	5019	39.0	4331	39.6	4421	42.3	4727	48.3	5392	7	
	8	40.4	4979	40.8	5070	43.3	5377	18.8	6046	43.8	5332	44.2	5434	47.1	5785	53.3	6546	47.0	5596	47.6	5708	50.9	6190	57.9	6919	8	
10	3	11.4	943	11.4	962	12.5	1029	14.3	1174	14.8	1604	15.0	1648	16.3	1793	18.9	2110									3	10
	4	14.6	1212	14.7	1237	15.8	1320	18.1	1500	18.2	1874	18.3	1922	19.8	2084	24.1	2435									4	
	5	18.4	1747	18.5	1781	19.8	1895	22.5	2145	20.4	2408	22.0	2466	23.9	2660	26.8	3081	25.6	2836	25.9	2909	28.2	3154	32.9	3686	5	
	6	27.0	2655	27.2	2705	28.9	2874	32.8	3241	30.4	3316	31.2	3390	33.1	3638	38.0	4117	34.1	3744	35.0	3833	37.5	4132	43.4	4782	6	
	7	33.4	3729	33.8	3799	36.1	4033	40.9	4542	37.2	4375	37.6	4467	40.1	4778	45.7	5454	41.0	4803	41.6	4910	44.5	5272	51.1	6059	7	
	8	41.2	5015	41.5	5107	44.0	5419	48.6	6097	44.4	5640	44.7	5724	47.8	6141	54.2	6981	48.4	6068	48.9	6197	52.2	6635	59.8	7586	8	
	9	49.8	5687	50.2	5791	53.1	6144	59.6	6909																	9	
	10	61.0	8535	61.4	8690	65.2	9216	73.2	10358	65.2	9109	65.8	9285	70.2	9878	79.2	11169	69.6	9537	70.4	9728	75.2	10372	85.4	11774	10	
12	4	15.4	1241	15.5	1266	16.6	1356	19.1	1540	19.6	2290	19.9	2352	21.4	2564	24.9	3023									4	12
	5	18.8	1775	18.9	1810	20.2	1929	22.9	2185	23.0	2824	23.1	2896	25.0	3140	28.9	3669									5	
	6	28.0	2683	28.2	2734	29.9	2908	33.9	3281	32.2	3732	33.6	3820	35.1	4118	40.1	4766	36.8	4381	37.4	4492	40.3	4867	46.7	5683	6	
	7	34.2	3761	33.8	3831	36.5	4069	41.3	4586	38.4	4791	39.0	4897	41.6	5258	47.5	6042	43.0	5440	43.8	5569	47.0	6007	54.1	6960	7	
	8	42.0	5050	42.1	5143	44.8	5459	50.6	6147	46.6	6056	46.9	6140	50.2	6621	56.0	7569	51.2	6705	51.7	6856	55.6	7370	63.6	8487	8	
	9	50.4	5722	50.8	5828	53.8	6187	60.6	6959	55.2	6728	55.8	6869	59.4	7346	67.4	8381	60.0	7377	60.8	7541	65.0	8095	74.2	9299	9	
	10	61.8	8580	62.3	8736	65.9	9267	74.3	10421	66.6	9525	67.1	9715	71.7	10358	81.1	11757	71.4	10174	72.3	10387	77.5	11107	88.1	12675	10	
	12	88.0	12939	88.8	13172	94.0	13963	105.7	15682	93.2	13884	94.2	14150	99.8	15054	113.1	17018	98.0	14533	99.2	14822	105.6	15803	119.4	17936	12	

QUANTITIES FOR ADDITIONAL CELLS

CONCRETE FOR TWO TYPE II HEADWALLS FOR EACH ADDITIONAL CELL (CU. YARDS) (ADD THIS QUANTITY TO THE QUANTITY FOR A DOUBLE BOX)

FOR HEIGHT(H) LESS THAN 12ft.
$[8.56ft^2 (SPAN(ft)+0.67ft)]/COS\ SKEW\ ANGLE$

FOR HEIGHT(H) EQUAL TO OR GREATER THAN 12ft.
$[9.23ft^2 (SPAN(ft)+0.67ft)]/COS\ SKEW\ ANGLE$

REINFORCING FOR TWO TYPE II HEADWALLS FOR EACH ADDITIONAL CELL (POUNDS) (ADD THIS QUANTITY TO THE QUANTITY FOR A DOUBLE BOX)

FOR HEIGHT(H) LESS THAN OR EQUAL TO 7ft.
[16.69lb/ft(SPAN(ft)+0.67ft)]/COS SKEW ANGLE

FOR HEIGHT(H) EQUAL TO 8ft OR 9ft.
[24.03lb/ft(SPAN(ft)+0.67ft)]/COS SKEW ANGLE

FOR HEIGHT(H) EQUAL TO OR GREATER THAN 10ft.
[42.72lb/ft(SPAN(ft)+0.67ft)]/COS SKEW ANGLE

ANGLE	COSINE
0°	1.0000
15°	0.9659
30°	0.8660
45°	0.7071

SHEET 2 OF 2

NEVADA DEPARTMENT OF TRANSPORTATION

RCB CULVERTS
TYPE II HEADWALLS

Signed Original On File
CHIEF BRIDGE ENGINEER

B-20.1.4.1 (502,505)
ADOPTED 11/70 REVISION 10/00

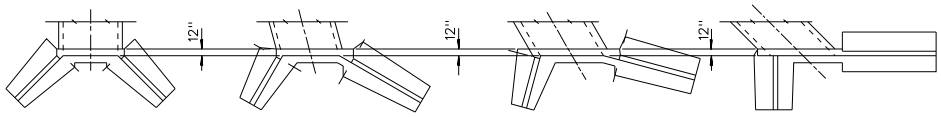

0° SKEW 15° SKEW 30° SKEW 45° SKEW

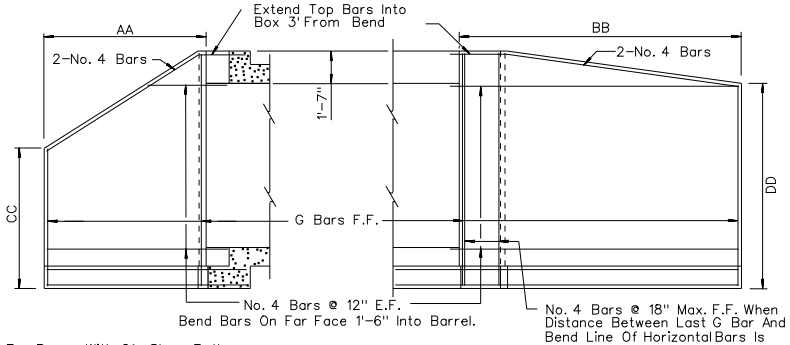

NOTE: For Boxes With 0° Skew Both Wings Are As Shown For Wing A.

SECTION WING A SECTION WING B

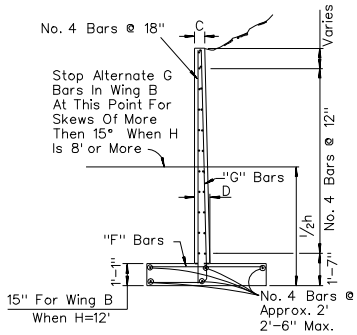

SECTION OF WINGS A AND B

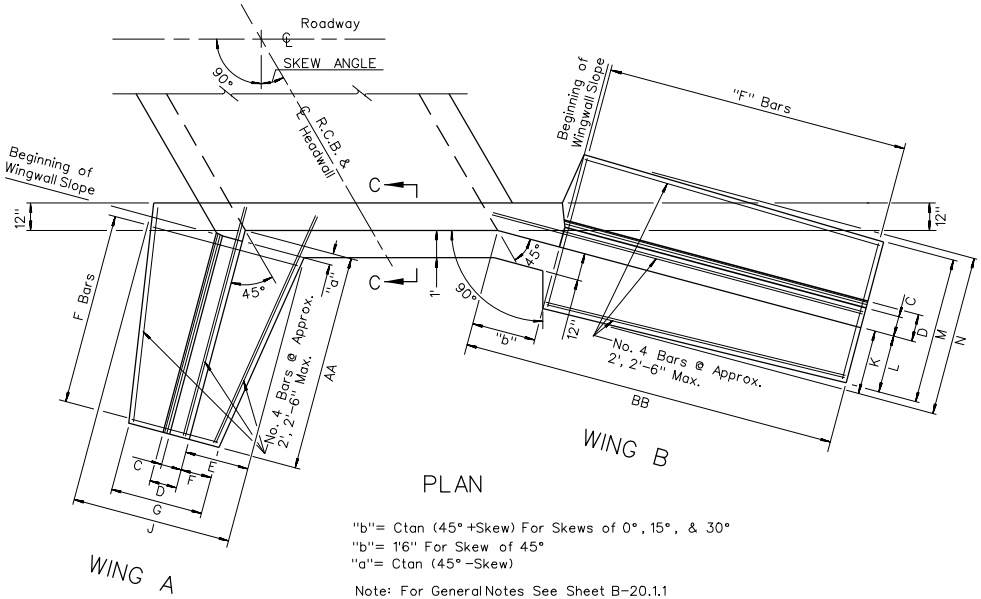

PLAN

"b"= Ctan (45° +Skew) For Skews of 0°, 15°, & 30°
"b"= 1'6" For Skew of 45°
"a"= Ctan (45° -Skew)

Note: For General Notes See Sheet B-20.1.1

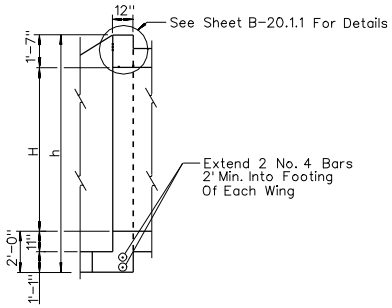

SECTION C-C

SHEET 1 OF 2

NEVADA DEPARTMENT OF TRANSPORTATION

RCB CULVERTS
TYPE I HEADWALLS

Signed Original On File	B-20.1.5	(502)
CHIEF BRIDGE ENGINEER	ADOPTED 11/70	REVISION 1/09

TYPE I HEADWALL DIMENSIONS AND REINFORCING STEEL

0° SKEW

H=Height In Feet	h= All Wings Except B For 45° Skew	AA & BB	CC & DD	C & D	E & K	F & L	G & M	J & N	Wings A&B G Bars Size	Wings A&B G Bars Spacing	Wings A&B F Bars Size	Wings A&B F Bars Spacing
3	6-7	4	4-2	8	1-4	0-10	2-1	3-4	4	12	4	12
4	7-7	5	5-8	8	1-6	1-2	2-10	3-10	4	12	4	12
5	8-7	6-2	6-2	8	1-9	1-3	3-1	4-4	4	12	4	12
6	9-7	7-2	6-8	8	1-11	1-4	3-4	4-10	4	10½	4	12
7	10-7	8-4	7-3	8	2-2	1-6	3-8	5-4	4	7	4	12
8	11-7	9-4	7-9	8	2-4	1-7	3-11	5-10	6	10½	4	11
9	12-7	10-5	8-3	9	2-6	1-8	4-2	6-4	6	9	4	9
10	13-7	11-6	8-10	10	2-9	1-9	4-5	6-10	6	7½	4	6½
12	15-7	13-7	9-11	12	3-2	2	5	7-10	7	7	5	6½

15° SKEW

H=Height In Feet	AA	BB	CC	DD	C	D	E & K	F	G	J & N	L	M	Wing A G Bars Size	Wing A G Bars Spacing	Wing A F Bars Size	Wing A F Bars Spacing	Wing B G Bars Size	Wing B G Bars Spacing	Wing B F Bars Size	Wing B F Bars Spacing
3	3-7	4-8	4-11	5-7	8	8	1-4	1	2-6	3-4	1-2	2-10	4	12	4	12	4	12	4	12
4	4-6	5-11	5-4	6-2	8	8	1-6	1-1	2-8	3-10	1-3	3-1	4	12	4	12	4	12	4	12
5	5-6	7-2	5-9	6-9	8	8	1-9	1-2	2-11	4-4	1-4	3-5	4	12	4	12	4	10	4	12
6	6-5	8-5	6-3	7-4	8	8	1-11	1-3	3-2	4-10	1-6	3-8	4	12	4	12	4	6½	4	12
7	7-6	9-9	6-9	8	8	8	2-2	1-4	3-5	5-4	1-7	4	4	8½	4	12	6	10	4	12
8	8-5	11	7-2	8-7	9	9	2-4	1-5	3-7	5-10	1-8	4-4	6	12	4	12	6	8	4	9½
9	9-4	12-3	7-7	9-2	9	10	2-6	1-6	3-10	6-4	1-10	4-7	6	10	4	10	7	9	4	8
10	10-4	13-6	8-1	9-11	9	12	2-9	1-7	4-1	6-10	2	5	6	8	4	8½	7	7½	4	6
12	12-3	15-11	9-1	11-4	11	15	3-2	1-10	4-7	7-10	2-3	5-8	7	7½	5	6½	7	6	5	6

30° SKEW

H=Height In Feet	h= All Wings Except B For 45° Skew	AA	BB	CC	DD	C	D	E & K	F	G	J & N	L	M	Wing A G Bars Size	Wing A G Bars Spacing	Wing A F Bars Size	Wing A F Bars Spacing	Wing B G Bars Size	Wing B G Bars Spacing	Wing B F Bars Size	Wing B F Bars Spacing
3	6-7	3-4	5-10	4-8	6-2	8	8	1-4	0-11	2-4	3-4	1-3	3-4	4	12	4	12	4	12	4	12
4	7-7	4-3	7-5	5-2	6-11	8	8	1-6	1	2-7	3-10	1-6	3-10	4	12	4	12	4	8½	4	12
5	8-7	5-2	8-11	5-6	7-8	8	8	1-9	1-1	2-9	4-4	1-9	4-4	4	12	4	12	4	6½	4	12
6	9-7	6-1	10-6	5-11	8-4	8	8	1-11	1-2	3	4-10	1-8	4-10	4	12	4	12	6	12	4	12
7	10-7	7	12-2	6-5	9-3	9	9	2-2	1-4	3-3	5-4	1-10	5-4	4	10½	4	12	6	8½	4	10½
8	11-7	7-11	13-9	6-10	10	9	9	2-4	1-5	3-5	5-10	2-4	5-10	4	6	4	12	6	7	4	7½
9	12-7	8-10	15-3	7-3	10-9	9	12	2-6	1-6	3-8	6-4	2-6	6-4	5	7½	4	9	7	8	5	7
10	13-7	9-9	16-10	7-8	11-7	9	13	2-9	1-7	3-10	6-10	2-9	6-10	6	9	4	7½	7	6½	6	7½
12	15-7	11-6	19-11	8-7	13-3	11	16	3-2	1-9	4-4	7-10	3-2	7-10	7	9	5	7½	8	6½	6	7½

45° SKEW

H=Height In Feet	AA	BB	CC	DD	C	D	E & K & L	F	G	J & M & N	Wing B h	Wing B DD	Wing A G Bars Size	Wing A G Bars Spacing	Wing A F Bars Size	Wing A F Bars Spacing	Wing B G Bars Size	Wing B G Bars Spacing	Wing B F Bars Size	Wing B F Bars Spacing
3	3-4	8-4	4-7	6-7	8	8	1-4	0-11	2-4	3-4	6-7	6-7	4	12	4	12	4	12	4	12
4	4-2	10-5	5	7-7	8	8	1-6	1	2-6	3-10	7-7	7-7	4	12	4	12	5	9½	4	12
5	5-1	12-7	5-5	8-7	9	9	1-9	1-1	2-9	4-4	8-7	8-7	4	12	4	12	6	9½	4	11
6	5-11	14-8	5-10	9-7	10	10	1-11	1-2	2-11	4-10	9-7	9-7	4	12	4	12	7	10	4	6½
7	6-11	17	6-3	10-7	12	12	2-2	1-3	3-2	5-4	10-7	10-7	4	10½	4	12	7	8½	5	7½
8	7-9	19-1	6-8	11-7	12	12	2-4	1-4	3-4	5-10	11-7	11-7	4	7	4	12	7	6½	6	8
9	8-7	21-2	7-1	12-7	9	14	2-6	1-5	3-7	6-4	12-7	12-7	5	8	4	10	7	6	6	7½
10	9-6	23-4	7-6	13-7	9	16	2-9	1-6	3-9	6-10	13-7	13-7	6	9½	4	7½	8	6½	8	10
12	11-3	27-7	8-6	15-9	11	20	3-2	1-8	4-2	7-10	15-9	15-9	7	9	5	7	7	8	8	8½

NEVADA DEPARTMENT OF TRANSPORTATION

RCB CULVERTS
TYPE I HEADWALLS

Signed Original On File
CHIEF BRIDGE ENGINEER

B-20.1.5.1 (502)
ADOPTED 11/70 REVISION 1/09

CUBIC YARDS OF CONCRETE AND POUNDS OF REINFORCING FOR TWO TYPE I HEADWALLS (1)

SPAN	HEIGHT	SINGLE BOX								DOUBLE BOX								TRIPLE BOX							
		0° SKEW		15° SKEW		30° SKEW		45° SKEW		0° SKEW		15° SKEW		30° SKEW		45° SKEW									
		CONC.	REINF.	CONC.	REINF.	CONC.	REINF.	CONC.	REINF.	CONC.	REINF.	CONC.	REINF.	CONC.	REINF.	CONC.	REINF.	CONC.	REINF.	CONC.	REINF.	CONC.	REINF.	CONC.	REINF.
5	3	5.6	393	6.4	476	7.2	563	8.9	739	7.7	508	8.5	597	9.5	700	11.8	910								
	4	7.6	609	8.0	644	9.6	774	11.6	946	9.7	726	10.1	767	12.0	912	14.6	1119	11.8	842	12.3	886	14.4	1045	17.6	1280
	5	9.6	705	10.2	782	11.8	942	15.0	1238	11.7	825	12.4	908	14.3	1085	18.0	1414	13.9	944	14.6	1030	16.8	1220	21.0	1578
6	3	6.0	418	6.8	504	7.6	595	9.4	779	8.3	600	9.2	699	10.3	817	12.7	1062								
	4	7.9	637	8.3	673	10.0	807	12.1	985	10.3	821	10.8	869	12.7	1032	15.5	1270	12.6	1004	13.2	1058	15.4	1243	18.8	1525
	5	9.9	730	10.6	809	12.2	974	15.4	1278	12.3	917	13.0	1009	15.0	1203	18.8	1566	14.7	1103	15.5	1199	17.7	1413	22.1	1823
	6	12.4	983	12.6	1106	15.5	1505	20.4	2158	14.8	1173	15.0	1310	18.3	1740	23.7	2449	17.2	1361	17.5	1502	21.0	1951	27.1	2708
	7	15.3	1400	16.0	1601	19.8	2155	26.5	3104																
7	3	6.3	442	7.1	532	8.0	626	9.9	820																
	4	8.3	665	8.7	702	10.4	839	12.6	1025																
	5	10.3	756	10.9	837	12.6	1006	15.9	1319																
	6	12.8	1011	12.9	1137	15.9	1544	20.8	2209																
	7	15.6	1432	16.3	1637	20.2	2199	27.0	3161																
8	3	6.7	467	7.5	559	8.4	658	10.4	861	7.8	817	10.7	1064	11.8	1109	14.5	1268								
	4	8.6	693	9.1	731	10.8	872	13.1	1065	11.8	1045	12.3	1078	14.3	1238	17.3	1475	14.9	1320	15.5	1365	17.8	1558	21.4	1858
	5	10.6	782	11.3	864	13.0	1038	16.4	1360	13.8	1137	14.5	1216	16.6	1405	20.6	1773	17.0	1414	17.8	1501	20.2	1720	25.0	2159
	6	13.1	1039	13.3	1169	16.3	1583	21.3	2261	16.4	1401	16.6	1525	19.9	1958	25.6	2676	19.6	1677	19.9	1814	23.6	2276	29.9	3065
	7	16.0	1464	16.7	1673	20.6	2242	27.5	3219	19.2	1824	21.0	2133	24.3	2620	31.8	3637	22.5	2107	24.4	2428	28.0	2946	36.1	4029
	8	17.9	1904	20.2	2234	24.2	2778	33.1	3938	21.2	2267	23.6	2552	27.9	3051	39.5	4359	24.5	2552	27.0	2850	31.7	3381	43.9	4753
10	3	7.3	515	8.2	612	9.2	721	11.4	942	11.2	1111	12.2	1227	13.6	1383	16.8	1734								
	4	9.3	749	9.8	789	11.6	936	14.1	1144	13.2	1348	13.8	1396	16.1	1608	19.6	1939								
	5	11.3	833	12.0	920	13.8	1101	17.4	1441	15.2	1434	16.1	1531	18.4	1770	23.0	2239	19.2	1876	20.1	1985	22.9	2274	28.5	2857
	6	13.8	1093	14.0	1233	17.1	1661	22.3	2365	17.8	1697	18.1	1775	21.7	2187	28.0	3165	21.8	2141	22.2	2219	26.3	2666	33.6	3786
	7	16.6	1528	17.4	1745	21.4	2329	28.4	3334	20.7	2135	21.6	2359	26.1	3006	34.1	4137	24.7	2582	25.8	2821	30.7	3519	39.8	4761
	8	18.6	1978	20.9	2314	25.0	2870	34.1	4054	22.7	2587	25.2	2935	29.7	2544	39.9	4860	26.8	3037	29.4	3399	34.4	4057	45.6	5486
	9	23.2	2117	25.4	2482	31.1	3244	41.4	4597																
		29.5	3352	31.6	3598	38.6	4397	51.7	5892	33.7	3967	36.0	4217	43.5	5077	57.6	6703	37.8	4422	40.3	4688	48.3	5598	63.5	7335
12	4	10.0	804	10.5	848	12.4	1001	15.1	1224	14.6	1732	15.2	1806	17.6	2090	21.5	2449								
	5	12.0	884	12.7	975	14.6	1165	18.4	1522	16.6	1815	17.5	1941	20.0	2247	24.9	2849								
	6	14.5	1148	14.7	1296	17.9	1738	23.3	2469	19.2	2086	19.6	2244	23.3	2817	29.9	3799	23.9	2744	24.4	2922	28.7	3576	36.5	4733
	7	17.3	1591	18.1	1817	22.2	2416	29.4	3449	22.1	2531	23.0	2775	27.7	3497	36.1	4782	26.8	3195	27.9	3460	33.1	4261	42.8	5719
	8	18.3	1945	21.8	2404	25.8	2962	35.1	4171	23.1	2884	26.7	3396	31.3	4048	41.8	5506	27.8	3554	31.6	4094	36.8	4830	48.6	6446
	9	23.9	2181	26.1	2553	31.9	3327	42.4	4704	28.7	3123	31.1	3522	37.5	4414	49.2	6042	33.5	3796	36.1	4218	43.0	5191	56.1	6984
	10	30.2	3429	32.3	3680	39.4	4488	52.7	6003	35.0	4373	37.4	4646	45.1	5580	59.6	7344	39.9	5049	42.4	5341	50.7	6353	66.5	8289
	12	42.8	5137	47.2	5372	56.4	6075	80.1	8124	47.8	6087	52.3	6340	62.2	7141	87.2	9470	52.7	6768	57.5	7045	67.9	7930	94.2	10.420

(1) – QUANTITIES SHOWN ARE FOR HEADWALLS AT THE INLET AND OUTLET

NEVADA DEPARTMENT OF TRANSPORTATION

ESTIMATE OF QUANTITIES
TYPE I HEADWALLS

Signed Original On File
CHIEF BRIDGE ENGINEER

B-20.1.6 (502)
ADOPTED 11/70 REVISION 3/97

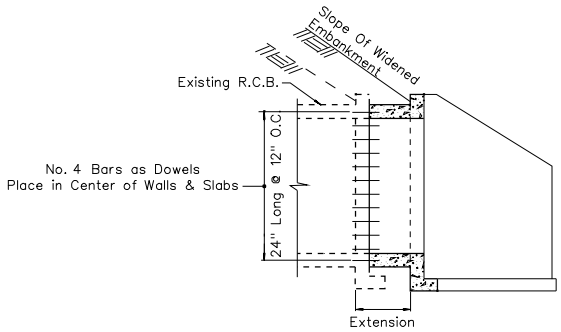

PART LONGITUDINAL SECTION

Old Headwalls to Remain in Place
Unless Otherwise Noted

NOTES:

1. FOR GENERAL NOTES SEE SHEET B-20.1.1.
2. DOWEL HOLES SHALL BE DRILLED 12" INTO EXISTING CONCRETE. DIAMETER OF HOLE SHALL BE 1/4" LARGER THAN DIAMETER OF BAR. HOLE MAY BE INCLINED NO MORE THAN 5° OFF THE HORIZONTAL. DOWELS SHALL BE EPOXIED INTO CLEAN HOLES. EPOXY SHALL CONFORM TO THE REQUIREMENT OF SECTION 728 OF THE STANDARD SPECIFICATIONS.

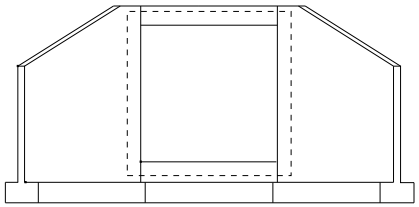

ELEVATION

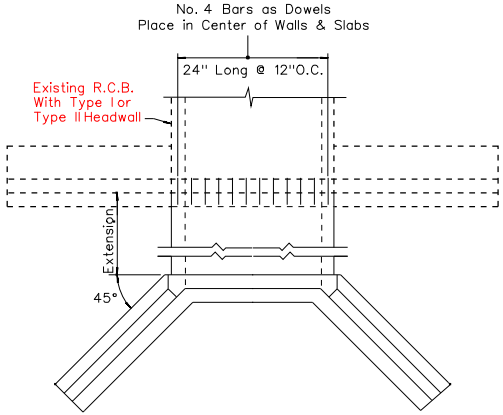

PLAN

R.C.B. CULVERT EXTENSION

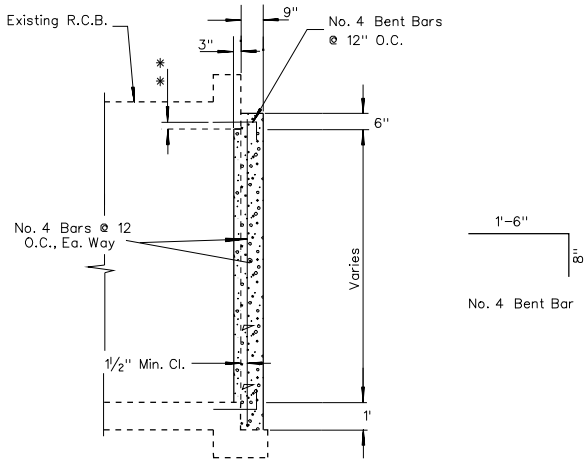

SECTION

METHOD OF PLUGGING R.C.B.
Width And Height Varies

NEVADA DEPARTMENT OF TRANSPORTATION

METHOD OF EXTENDING
R.C.B. CULVERTS

Signed Original On File	B-20.1.7	(502)
CHIEF BRIDGE ENGINEER	ADOPTED 11/70	REVISION 1/09

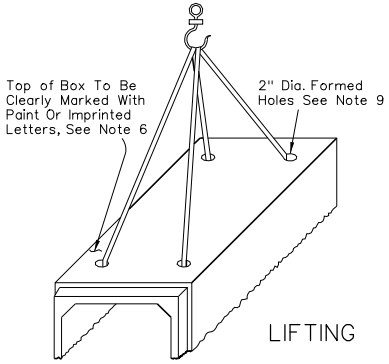

LIFTING

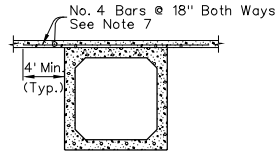

CONCRETE PAVING

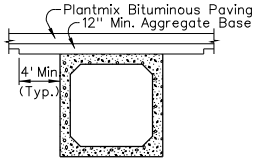

BITUMINOUS PAVING

MINIMUM COVER CONDITIONS

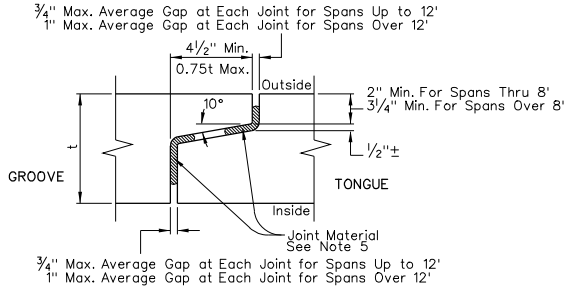

TYPICAL JOINT

NOTES:

1. CONCRETE SHALL BE AS SPECIFIED IN AASHTO M259 OR M273 (ASTM C1433), AS MODIFIED IN SUBSECTION 502.03.24.
2. REINFORCING STEEL SHALL BE AASHTO M31 (ASTM A615) GRADE 60. WELDED WIRE FABRIC SHALL BE AASHTO M55 (ASTM A185) (SMOOTH WIRE), OR AASHTO M22 (ASTM A497) (DEFORMED WIRE). REINFORCING STEEL IN THE TOP SLAB SHALL HAVE AN EPOXY COATING CONFORMING TO AASHTO M284 (ASTM D3963) WHEN THERE IS 6" OR LESS OF COVER ON THE RCB (CLARK COUNTY EXCLUDED).
3. BEDDING MATERIAL SHALL BE GRANULAR BACKFILL OR TYPE 2 CLASS B AGGREGATE MEETING THE RESISTIVITY REQUIREMENTS FOR GRANULAR BACKFILL. BEDDING MATERIAL WILL BE PAID FOR AS GRANULAR BACKFILL.
4. HEADWALL DETAILS SHALL BE AS SHOWN IN THE STANDARD PLANS. EXPOSED REINFORCEMENTS TO TIE CAST-IN-PLACE HEADWALL TO PRECAST BOX SHALL CONSIST OF EITHER NO. 4 BARS AT 12" SPACINGS OR EXPOSURE OF THE PRECAST BOX WELDED WIRE FABRIC. THE NO. 4 BARS SHALL BE CAST A MINIMUM OF 18" INTO THE PRECAST BOX SEGMENT. BOTH THE NO. 4 BAR OR WELDED WIRE FABRIC SHALL EXTEND INTO HEADWALL TO 2" CLEAR OF THE HEADWALL FACE.
5. JOINT MATERIAL SHALL BE A PREFORMED JOINT MATERIAL MEETING AASHTO M198 TYPE B. THE MATERIAL SHALL BE INSTALLED IN ACCORDANCE WITH THE MANUFACTURERS RECOMMENDATIONS. A DOUBLE APPLICATION OF JOINT MATERIAL SHALL BE USED. APPLY ONE APPLICATION TO THE TONGUE AND THE OTHER TO THE GROOVE. THE MINIMUM SIZE OF JOINT MATERIAL SHALL BE 1¼". ANY JOINT MATERIAL EXTRUDING FROM THE INTERIOR OF THE JOINT SHALL BE REMOVED FLUSH WITH THE BOX WALL.
6. IN ADDITION TO THE MARKINGS REQUIRED BY THE AASHTO AND ASTM SPECIFICATIONS, MARK EACH BOX SECTION WITH THE APPROPRIATE NDOT CONTRACT NUMBER.
7. REINFORCING STEEL SHALL EXTEND FULL WIDTH OF CONCRETE PAVEMENT AND SHALL HAVE A MINIMUM CLEARANCE OF 3" ON THE BOTTOM. IN AREAS OF THE STATE WHERE ROAD SALTS ARE USED, THE REINFORCING SHALL BE EPOXY COATED. REINFORCING IS TO BE PLACED PARALLEL TO THE CENTERLINE OF ROAD FOR LONGITUDINAL REINFORCEMENT AND PARALLEL TO THE PRECAST BOX FOR TRANSVERSE REINFORCEMENT.
8. LENGTH OF CULVERT SHALL BE INCREASED AS FOLLOWS: ADD 2' TO EACH END WHEN COVER AT SHOULDER IS 0' TO 5', ADD AN ADDITIONAL 1' TO EACH END FOR EACH SUCCEEDING 5' OF COVER OR PORTION THEREOF.
9. FILL CYLINDRICAL LIFTING HOLES (LOCATED BY MANUFACTURER) WITH AN APPROVED EPOXY NON-SHRINK GROUT. HOLE WITH AN APPROVED CONICAL SHAPE FOR THE BOTTOM 3" MAY BE FILLED WITH A CONCRETE GROUT COMPOSED OF ONE PART BY VOLUME OF CEMENT TO TWO PARTS BY VOLUME OF SAND WITH ONLY ENOUGH WATER TO PERMIT PLACING AND TAMPING. AN APPROVED CUSTOM PLUG MAY BE USED. AN OPTIONAL METHOD OF LIFTING MAY BE USED WITH APPROVAL.

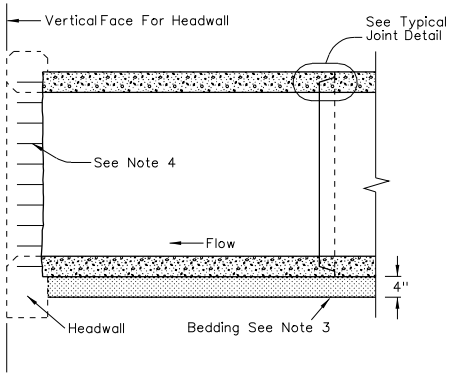

CULVERT END

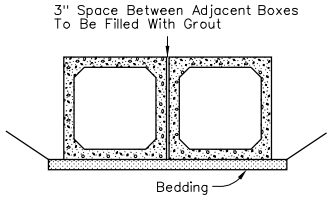

MULTIPLE CULVERT INSTALLATION

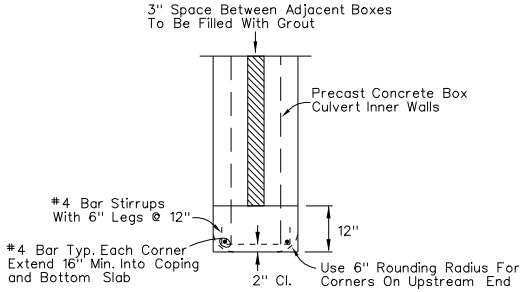

MULTIPLE CULVERT INNER WALL END PLAN

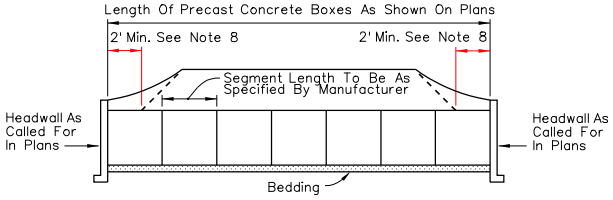

TYPICAL CULVERT INSTALLATION

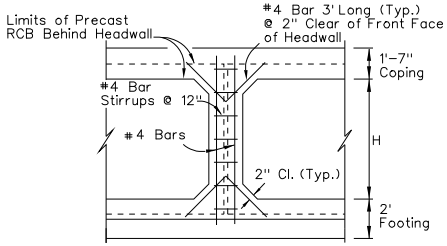

MULTIPLE SPAN INNER WALL END ELEVATION

Designer To Investigate The Availability Of The Required Box Size.

NEVADA DEPARTMENT OF TRANSPORTATION

PRECAST CONCRETE BOX CULVERT

Signed Original On File	B-20.1.8	(502)
CHIEF BRIDGE ENGINEER	ADOPTED 4/85	REVISION 9/09

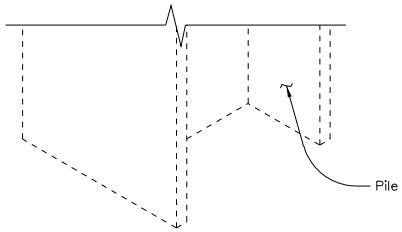

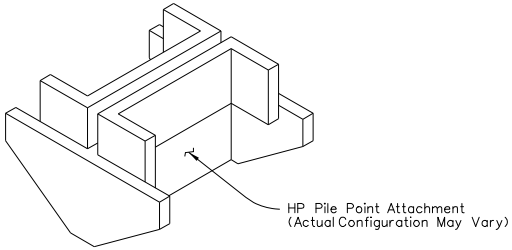

TYPICAL HP PILE POINT DETAIL

HP PILE POINT ATTACHMENT NOTES:

1. HP PILE POINT ATTACHMENTS ARE REQUIRED ONLY WHEN SHOWN ON THE PLANS OR IN THE SPECIAL PROVISIONS.
2. THE PILE POINT CONFIGURATION SHALL BE AS SHOWN ON PLANS.
3. PILE POINT ATTACHMENTS SHALL CONFORM TO THE REQUIREMENTS OF ASTM A27 GRADE 65-35 UNLESS NOTED OTHERWISE.
4. WELDS FOR ATTACHMENTS SHALL BE AS RECOMMENDED BY THE MANUFACTURER.

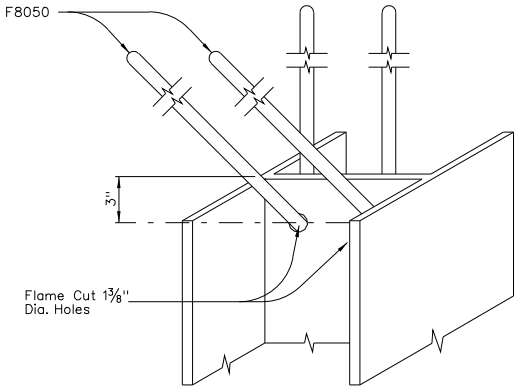

HP PILE ANCHORAGE DETAIL

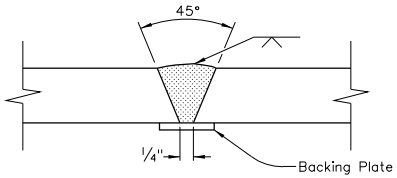

SINGLE VEE-GROOVE BUTT WELD

Permitted For All Positions

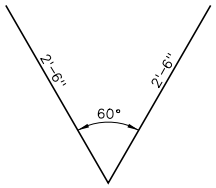

2-F8050

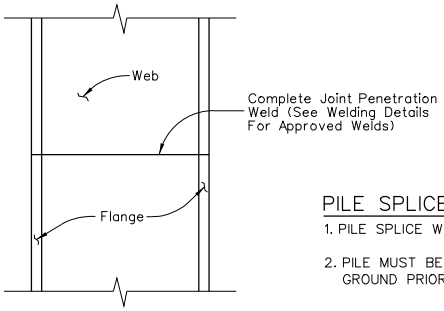

HP PILE SPLICE DETAIL

PILE SPLICE NOTES:

1. PILE SPLICE WELDS SHALL CONFORM TO AWS D1.1.
2. PILE MUST BE STOPPED AT LEAST 3'-0" ABOVE GROUND PRIOR TO SPLICING.

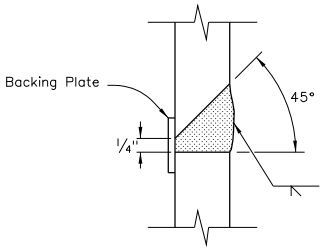

SINGLE BEVEL-GROOVE BUTT WELD

Permitted In Horizontal Position Only

PILE SPLICE WELDING DETAILS

NEVADA DEPARTMENT OF TRANSPORTATION

"HP" PILE DETAILS

Signed Original On File	B-23.1.4	(508)
CHIEF BRIDGE ENGINEER	ADOPTED 12/90	REVISION

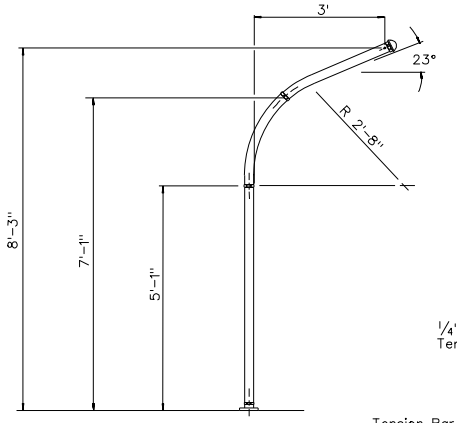

TYPE M

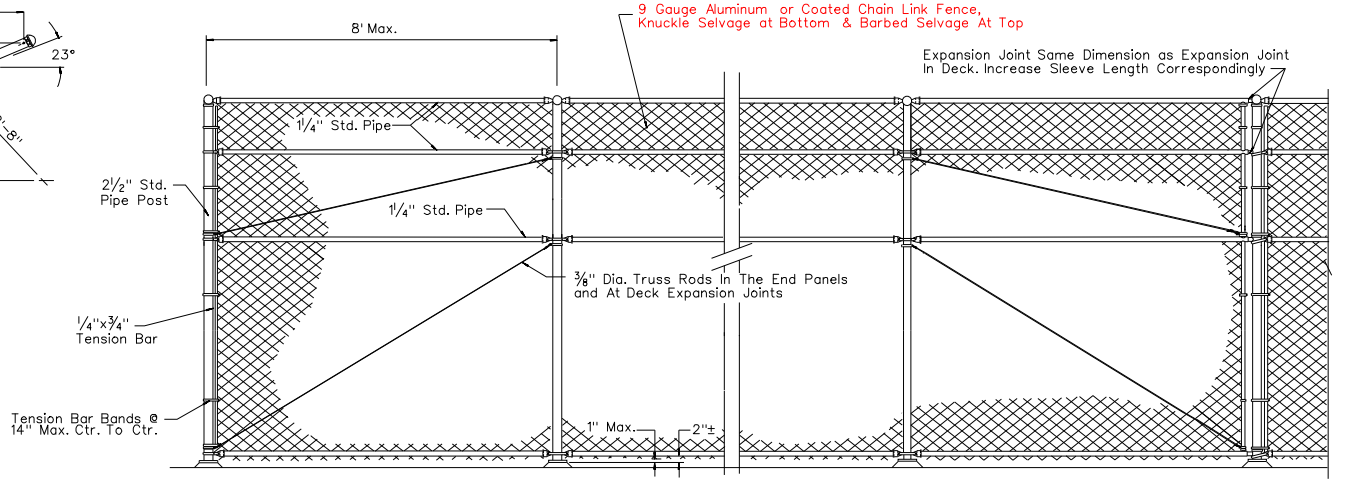

END POST

TYPICAL INTERIOR PANEL

AT EXPANSION JOINT

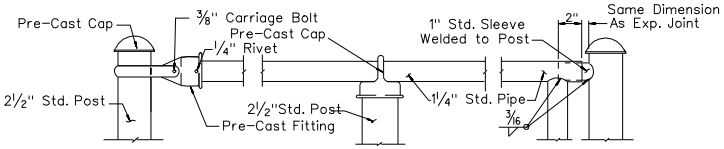

ALTERNATE FOR INTERIOR POSTS

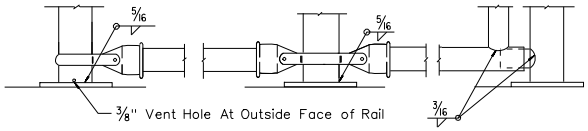

TYPICAL CONNECTION DETAILS

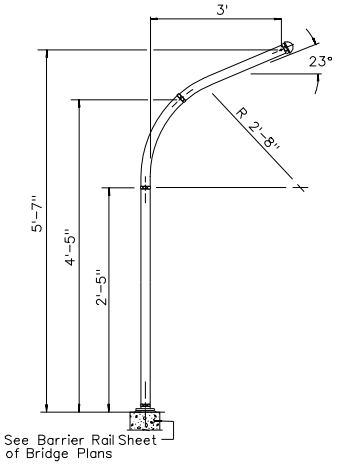

TYPE M (MODIFIED)

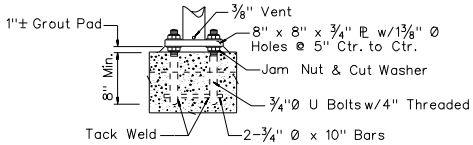

ANCHORAGE DETAILS

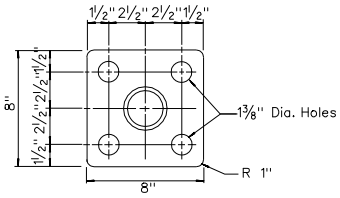

BASE PLATE

NOTES:

1. RAILING ASSEMBLY EXCEPT CHAIN LINK FABRIC, TO BE GALVANIZED AFTER FABRICATION.
2. RAILING SHALL CONFORM TO HORIZONTAL AND VERTICAL ALIGNMENTS. POSTS SHALL BE VERTICAL. TOP, INTERMEDIATE AND BOTTOM PIPES SHALL BE BENT IF THE RADIUS IS 150' OR LESS: MAY BE ON 8' CHORDS IF RADIUS IS OVER 150'.
3. SPACE POSTS TO CLEAR EXPANSION JOINTS BY 6" MIN. TO CENTERLINE POSTS.
4. ALL EXPOSED CORNERS TO BE SMOOTH.
5. PEEN ALL ⅜" BOLTS.
6. WHEN FENCE IS ON SLOPE THE FABRIC SHALL BE PLACED PARALLEL TO THE SLOPE.
7. ALTERNATIVE DETAILS MAY BE SUBMITTED BY THE CONTRACTOR FOR THE ENGINEERS APPROVAL.

NEVADA DEPARTMENT OF TRANSPORTATION

PEDESTRIAN RAIL
TYPE M

Signed Original On File	B-25.1.4	(506)
CHIEF BRIDGE ENGINEER	ADOPTED 8/85	REVISION 1/09

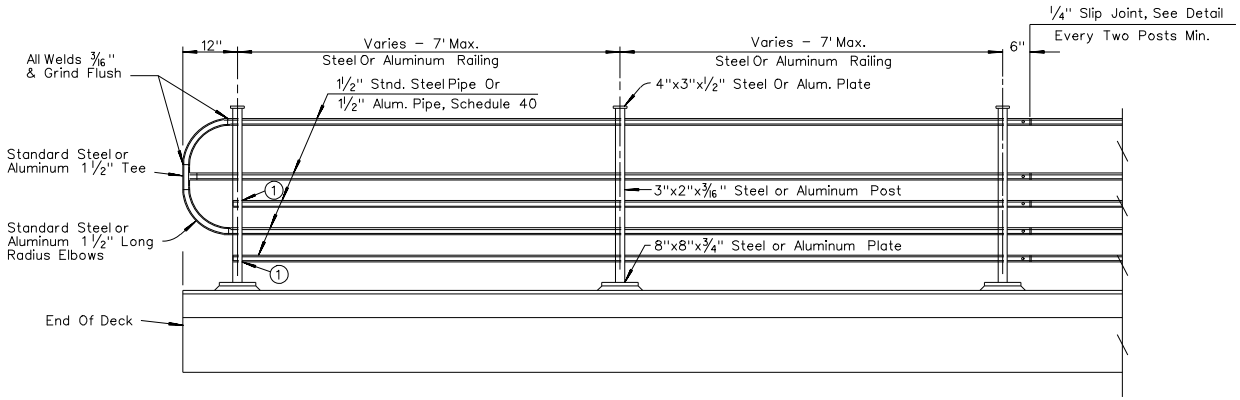

PART ELEVATION

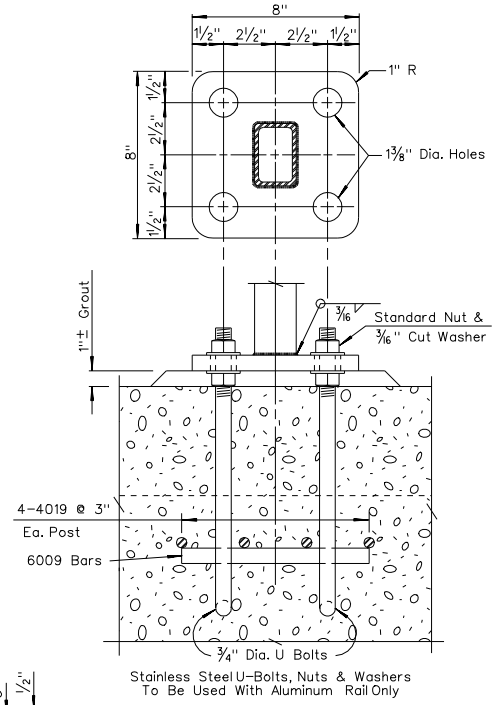

BOTTOM PLATE DETAILS

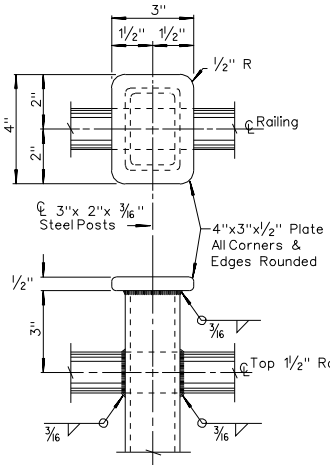

TOP POST PLATE DETAILS

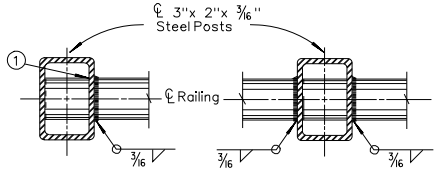

TYPICAL RAIL & POST CONNECTION STEEL

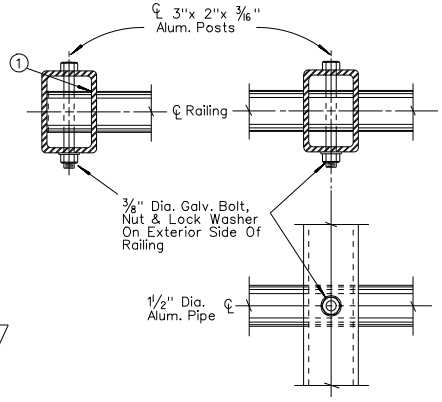

TYPICAL RAIL & POST CONNECTION ALUMINUM

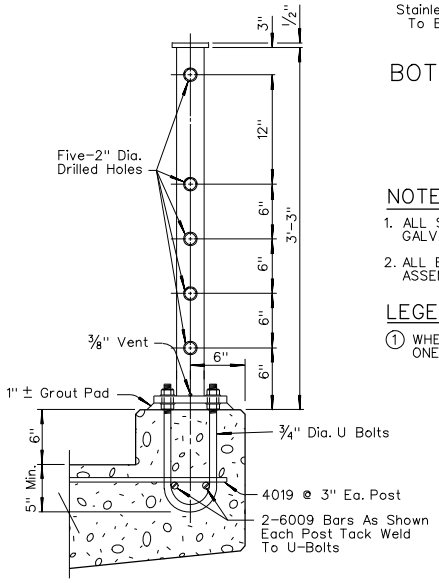

TYPICAL SECTION

NOTES:

1. ALL STEEL RAILING ASSEMBLY SHALL BE GALVANIZED AFTER FABRICATION.
2. ALL EXPOSED SURFACES OF STEEL RAILING ASSEMBLY SHALL BE PAINTED WHITE.

LEGEND:

1 WHERE RAIL ENDS AT POST, DRILL POST ONE SIDE ONLY & END RAIL WITHIN POST.

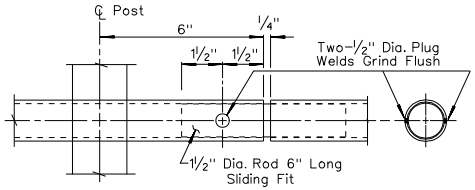

SLIP JOINT DETAILS

NEVADA DEPARTMENT OF TRANSPORTATION

PEDESTRIAN RAIL
TYPE R

Signed Original On File	B-25.1.5	(506)
CHIEF BRIDGE ENGINEER	ADOPTED 11/78	REVISION 3/97

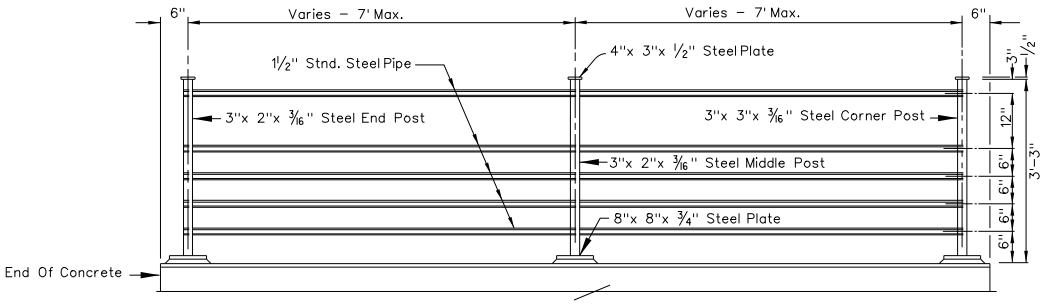

PART ELEVATION

NOTES:

1. ALL STEEL RAILING ASSEMBLY SHALL BE GALVANIZED AFTER FABRICATION.
2. ALL EXPOSED SURFACES OF STEEL RAILING ASSEMBLY SHALL BE PAINTED WHITE.

LEGEND:

✳ – WHERE RAIL ENDS AT POST DRILL POST ONE SIDE ONLY & END RAIL WITHIN POST

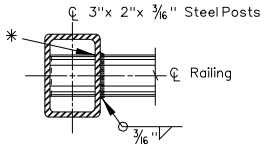

TYPICAL
RAIL & END POST
CONNECTION

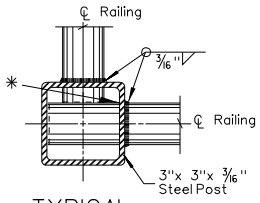

TYPICAL
RAIL & CORNER POST
CONNECTION

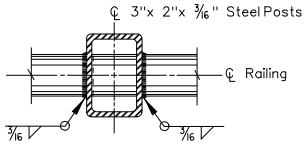

TYPICAL
RAIL & MIDDLE POST
CONNECTION

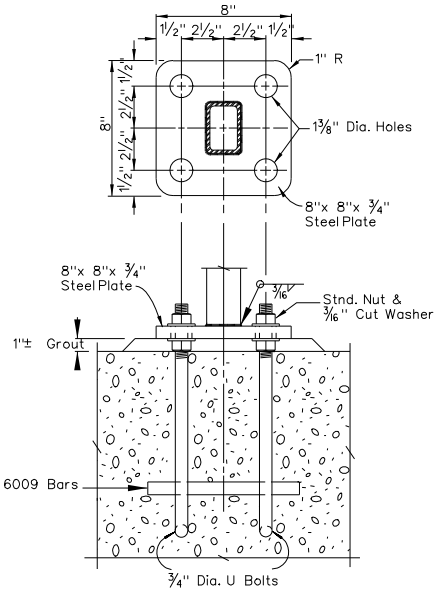

BOTTOM PLATE DETAILS

Stainless Steel U-Bolts, Nuts & Washers
To Be Used With Aluminum Rail Only

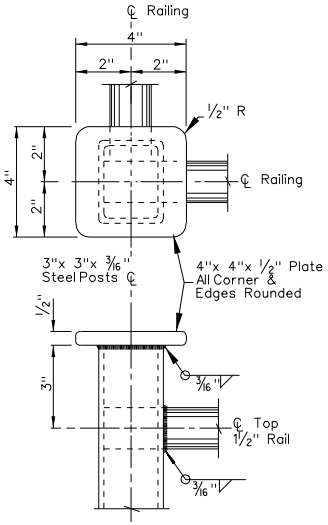

TOP POST PLATE
FOR 3" x 3"
CORNER POSTS
DETAILS

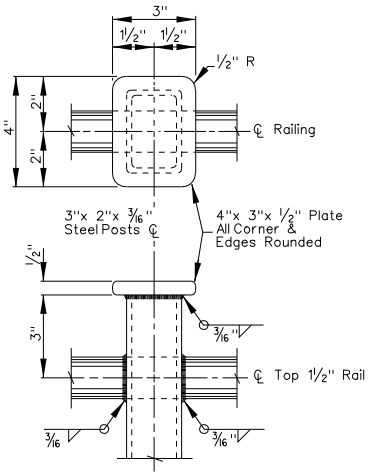

TOP POST PLATE
FOR 3" x 2" POSTS
DETAILS

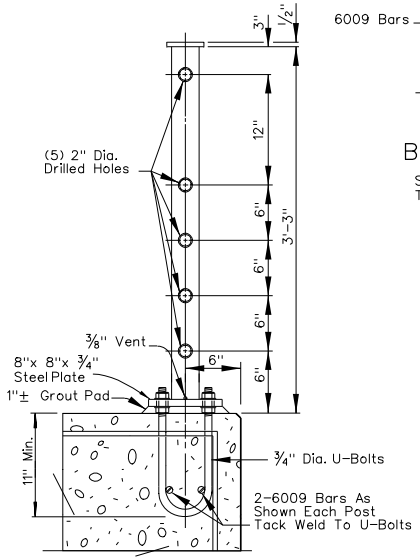

TYPICAL SECTION

NEVADA DEPARTMENT OF TRANSPORTATION

PEDESTRIAN RAIL
TYPE R MODIFIED

Signed Original On File	B-25.1.6	(623)
CHIEF BRIDGE ENGINEER	ADOPTED 12/06	REVISION 1/09

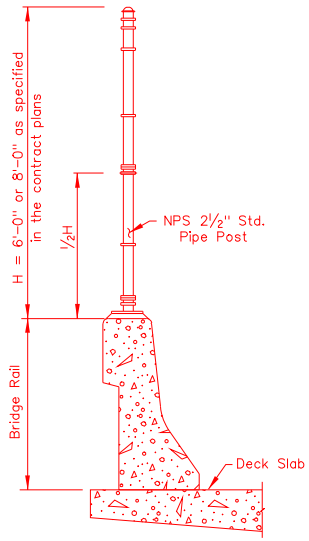

SECTION

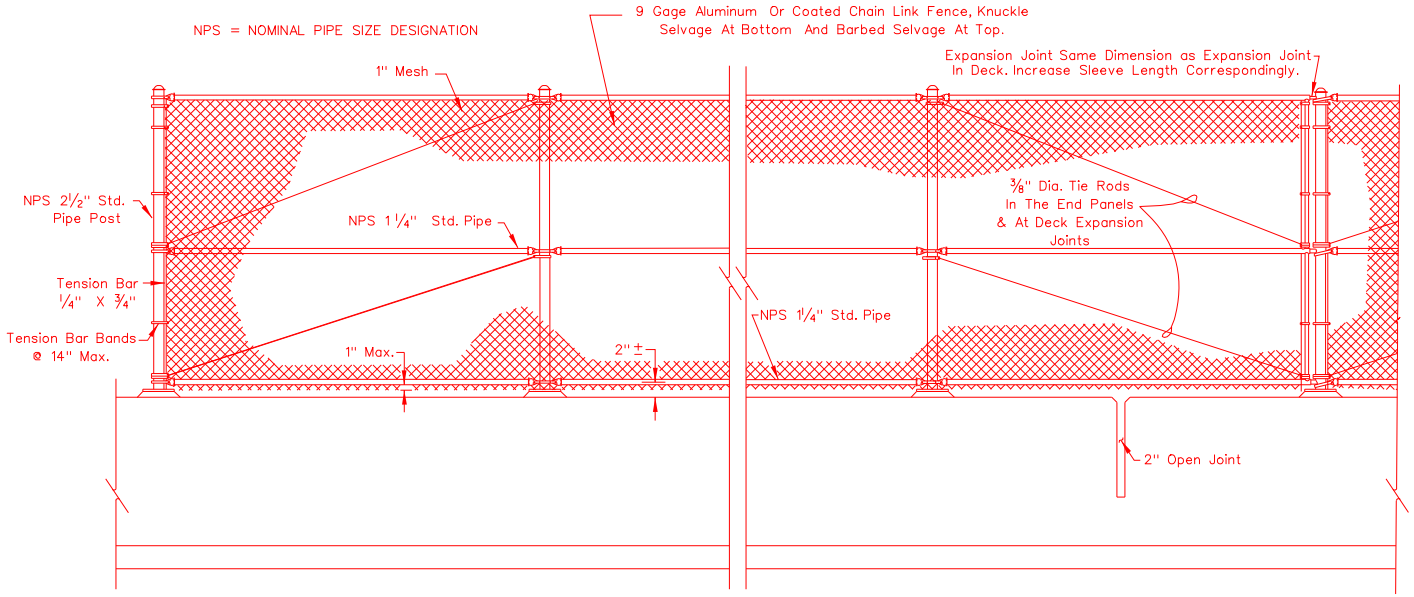

END POST

TYPICAL INTERIOR PANEL

AT EXPANSION JOINT

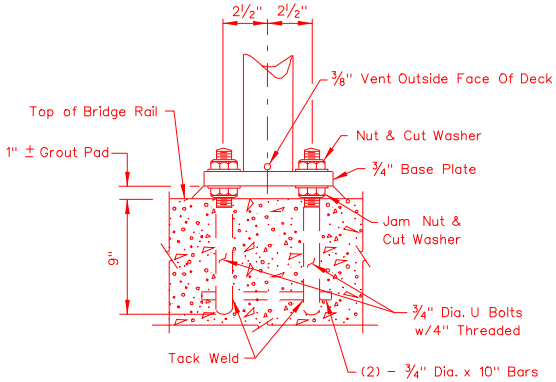

ANCHORAGE DETAILS

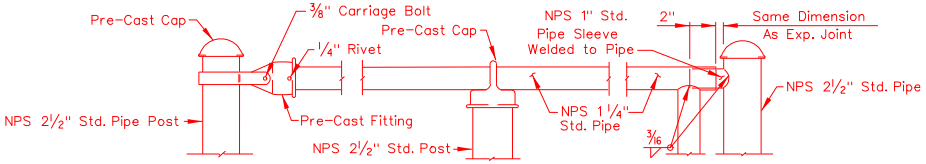

ALTERNATE FOR INTERIOR POSTS

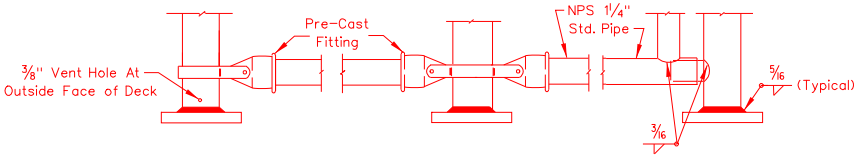

TYPICAL CONNECTION DETAILS

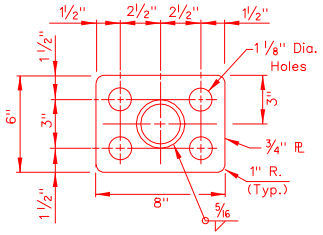

BASE PLATE

NOTES:

1. RAILING ASSEMBLY, EXCEPT CHAIN LINK FABRIC, TO BE GALVANIZED AFTER FABRICATION.
2. RAILING SHALL CONFORM TO HORIZONTAL AND VERTICAL ALIGNMENTS. POSTS SHALL BE VERTICAL. TOP, INTERMEDIATE AND BOTTOM PIPES SHALL BE BENT IF THE RADIUS IS 150' OR LESS; MAY BE ON 8' CHORDS IF RADIUS IS OVER 150'.
3. ALL EXPOSED CORNERS TO BE SMOOTH.
4. PEEN ALL 3/8" BOLTS.
5. WHEN FENCE IS ON SLOPE THE FABRIC SHALL BE PLACED PARALLEL TO THE SLOPE.
6. ALTERNATIVE DETAILS MAY BE SUBMITTED BY THE CONTRACTOR FOR THE ENGINEERS APPROVAL.
7. STEEL BASE PLATES SHALL BE GRADE ASTM A36 STEEL.

NEVADA DEPARTMENT OF TRANSPORTATION

PEDESTRIAN RAIL TYPE "V"

Signed Original On File	B-25.1.7	(506)
CHIEF BRIDGE ENGINEER	ADOPTED 1/09	REVISION

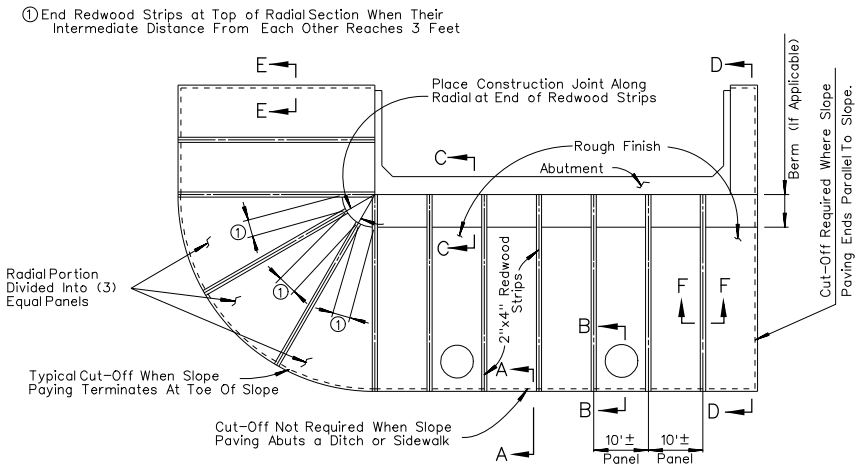

PLAN VIEW

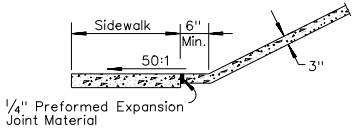

SECTION A-A
WITH SIDEWALK

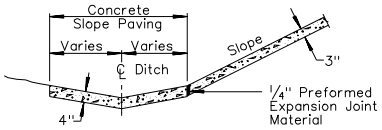

SECTION A-A
WITH DITCH

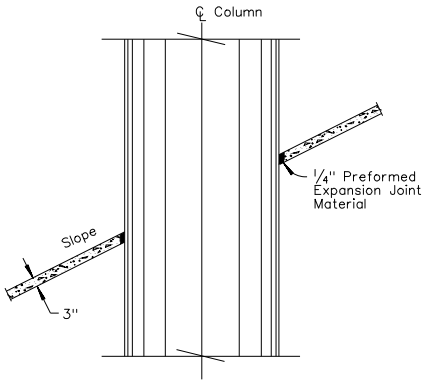

SECTION B-B
AT PIER

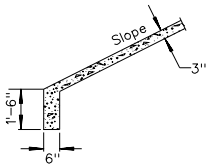

SECTION A-A
TOE OF SLOPE

NOTES:

1. SLOPE PAVING IS TO BE DIVIDED INTO EQUALLY SPACED PANELS THE WIDTH OF EACH PANEL IS TO BE AS NEARLY 10' AS SITE DIMENSIONS WILL PERMIT.
2. THESE DETAILS WILL NOT APPLY IN TOTAL TO ANY ONE SITE, BUT ARE INTENDED TO BE GENERAL ENOUGH TO COVER ALL POSSIBLILITIES. TO OBTAIN LIMITS OF SLOPE PAVING FOR A SPECIFIC SITE, CONSULT THE PLAN SHEETS.
3. CONCRETE SHALL BE CLASS A OR AA WITH FIBER REINFORCING.

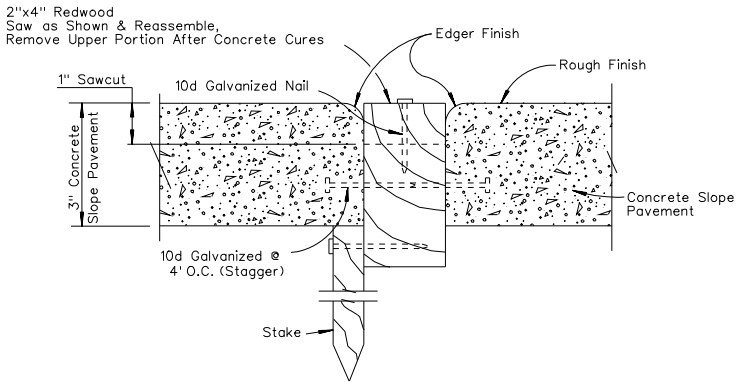

SECTION F-F

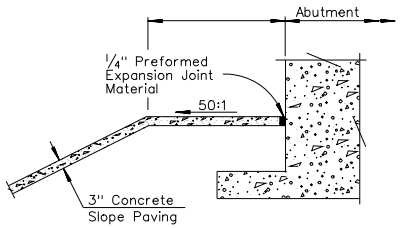

SECTION C-C
AT ABUTMENT

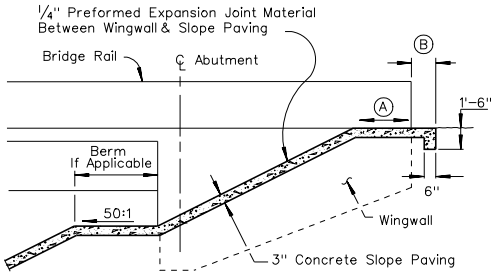

Ⓐ Slope shall be 50:1 Min. or roadway grade Max.
Ⓑ 1' Unless shown otherwise in plans.

SECTION D-D
AT WINGWALL

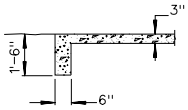

SECTION E-E
EDGE OF SLOPE

NEVADA DEPARTMENT OF TRANSPORTATION

CONCRETE SLOPE PAVING DETAILS

Signed Original On File	B-26.1.1	(611)
CHIEF BRIDGE ENGINEER	ADOPTED 11/78	REVISION 2/05

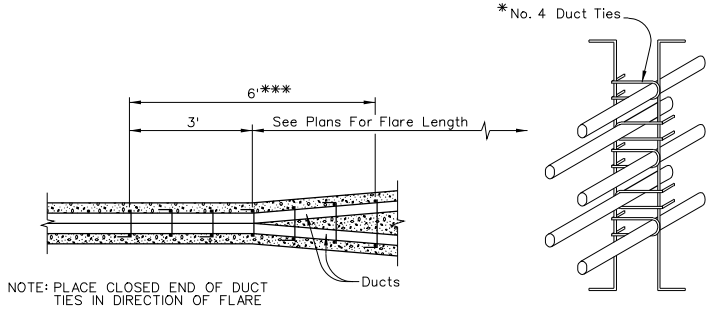

PLAN

STIRRUP REINFORCEMENT AT FLARE OF GIRDER STEM

DISTRIBUTION OF PRESTRESSING FORCE:

UNLESS OTHERWISE NOTED THE PRESTRESSING FORCE, P JACK OR PF, SHALL BE DISTRIBUTED WITH AN APPROXIMATELY EQUAL AMOUNT IN EACH GIRDER AND SHALL BE PLACED SYMMETRICALLY ABOUT THE CENTERLINE OF THE STRUCTURE. IN SLABS, THE PRESTRESSING FORCE SHALL BE UNIFORMLY DISTRIBUTED ACROSS THE SLAB.

STRESSING SEQUENCE:

NO MORE THAN 1/2 OF THE PRESTRESSING FORCE IN ANY GIRDER MAY BE STRESSED BEFORE AN EQUAL FORCE IS STRESSED IN THE ADJACENT GIRDERS, AT NO TIME DURING THE STRESSING OPERATIONS WILL MORE THAN 1/6 OF THE TOTAL PRESTRESSING FORCE BE APPLIED ECCENTRICALLY ABOUT THE CENTERLINE OF THE STRUCTURE.

GIRDER STEM SHALL BE FLARED NEAR ANCHORAGE TO PROVIDE A MINIMUM OF 1½" CONCRETE COVERING THE REBAR, FLARE MAY BE ON ONE SIDE OF THE GIRDER ONLY. BAR REINFORCEMENT INTERFERING WITH THE PRESTRESSING TENDON ALIGNMENT SHALL BE ADJUSTED AS APPROVED BY THE ENGINEER.

* BARS MARKED THUSLY ARE TO BE INCLUDED IN THE COST OF PRESTRESSING CAST-IN-PLACE CONCRETE.

** CONCRETE USED IN THE BEARING SEATS IS TO BE INCLUDED IN THE COST OF PRESTRESSING CAST-IN-PLACE CONCRETE.

*** ADD ADDITIONAL No.4 STIRRUP BARS, IN PAIRS, AS NECESSARY TO MAINTAIN A 12 INCH STIRRUP SPACING. SEE PLANS FOR STIRRUP BENDING DIMENSIONS AND EPOXY COATING REQUIREMENTS. ADDITIONAL No.4 STIRRUP BARS TO BE INCLUDED IN COST OF PRESTRESSING.

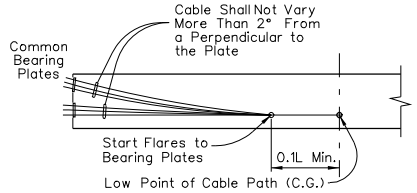

COMMON BEARING PLATE PRESTRESSING PATH

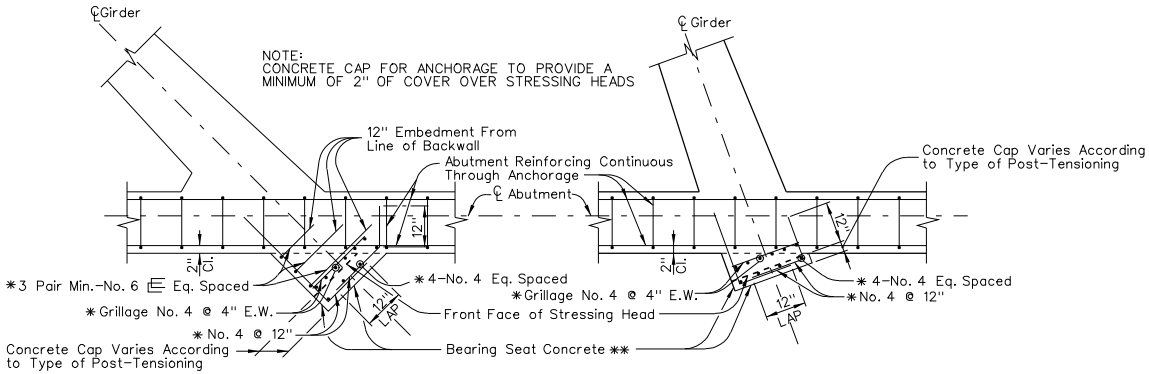

SKEW OVER 20° PLAN

SKEW 20° AND UNDER PLAN

BEARING SEAT FOR PRESTRESSED ANCHORAGE AT DIAPHRAGM TYPE ABUTMENTS

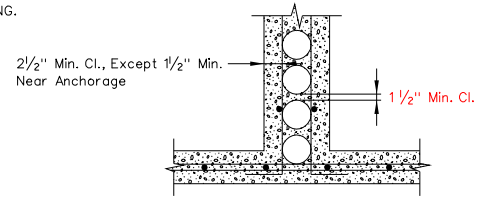

DUCTS OVER 4" O.D.

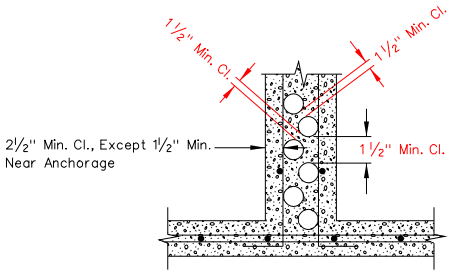

DUCTS 4" O.D. & LESS

CLEARANCE REQUIREMENTS FOR DUCTS

1. DUCT PATTERNS SHOWN ARE FOR 12" WIDE GIRDER STEM; FOR OTHER WIDTHS THE MINIMUM CLEARANCES MUST BE MAINTAINED.
2. VERTICAL DIMENSIONS AT TENTH POINTS TO BE SHOWN IN ORDER TO FACILITATE THE PLACING OF THE DUCTS ACCURATELY.
3. APPROVAL OF THE ENGINEER IS REQUIRED FOR DEVIATIONS.

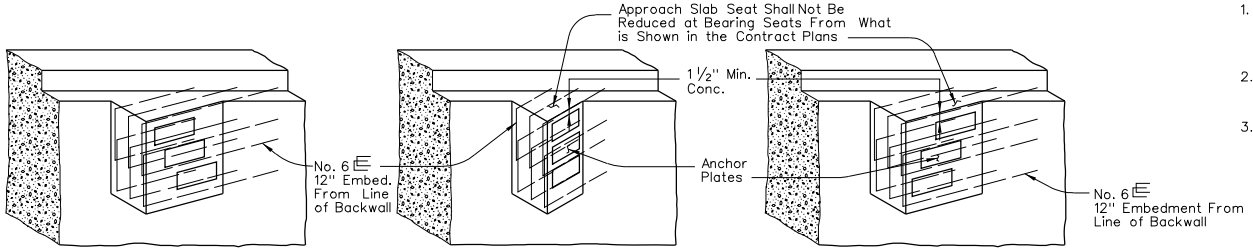

EXT.SLOPING GIRDER

VERTICAL GIRDER

EXT.SLOPING GIRDER

NOTE: DETAILS MAY BE MODIFIED TO SUIT SPECIFIC ANCHORAGE

TYPICAL BEARING SEAT ILLUSTRATIONS

NEVADA DEPARTMENT OF TRANSPORTATION

CAST-IN-PLACE PRESTRESSED GIRDER DETAILS

Signed Original On File	B-28.1.1	(503)
CHIEF BRIDGE ENGINEER	ADOPTED 3/85	REVISION 1/09

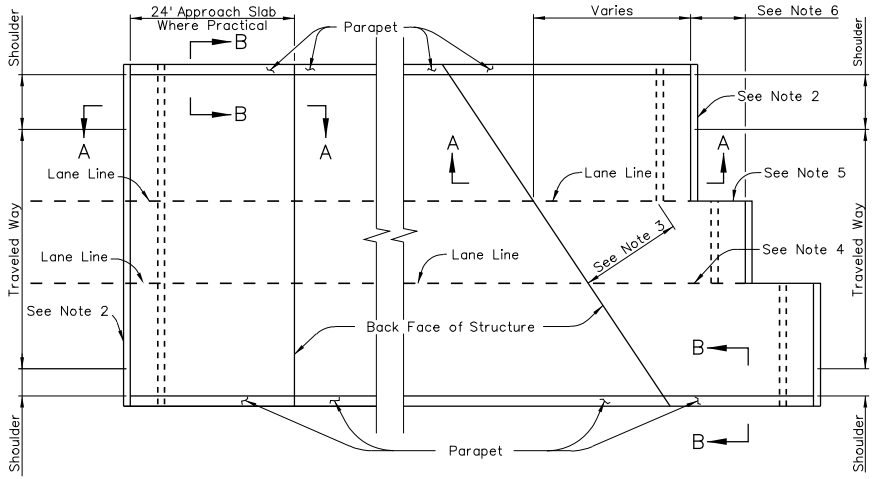

TYPICAL PLAN (NORMAL) TYPICAL PLAN (SKEWED)

CONCRETE PAVING

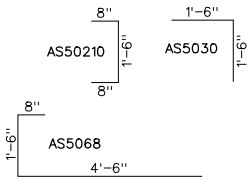

BENT BAR DETAIL

NOTES:

1. THE CONCRETE SHALL BE "EA", F'c=4500 PSI, OR "A" F'c=4000 PSI, AS INDICATED IN THE PLANS. WHEN "EA" CONCRETE IS REQUIRED, THE REINFORCING STEEL SHALL HAVE AN EPOXY COATING.
2. A. THE CONTACT JOINT BETWEEN THE CONCRETE PAVEMENT AND THE APPROACH SLAB SHALL PARALLEL THE BACK FACE OF THE STRUCTURE FOR SKEWS OF 20 DEGREES OR LESS; FOR SKEWS GREATER THAN 20 DEGREES THE CONTACT JOINT SHALL BE NORMAL TO THE ROADWAY ALIGNMENT CONTROL LINE. JOINTS SHALL BE STAGGERED ON LANE LINES FOR SKEWED STRUCTURES. STAGGER LINES SHALL BE AT EACH LANE LINE FOR SKEWS OF 45 DEGREES OR MORE.
   B. THE CONTACT JOINT BETWEEN ASPHALT PAVEMENT AND APPROACH SLAB SHALL PARALLEL THE BACK FACE OF THE STRUCTURE.
3. FOR SKEWS GREATER THAN 20 DEGREES THE DISTANCE MEASURED NORMAL TO AND FROM THE BACK FACE OF THE STRUCTURE TO THE END OF THE APPROACH SLAB SHALL BE A MINIMUM OF 15'.
4. LONGITUDINAL CONSTRUCTION JOINTS IN THE APPROACH SLAB MAY BE LOCATED ON LANE LINES WHEN PERMITTED BY THE ENGINEER.
5. PLACE 1/4" EXPANSION JOINT MATERIAL BETWEEN THE CONCRETE PAVEMENT AND THE LONGITUDINAL FACE OF THE APPROACH SLAB. THE EXPANSION JOINT MATERIAL IS TO BE RECESSED 1/2" FROM THE SURFACE AND THE JOINT SEALED IDENTICALLY TO THE "LONGITUDINAL WEAKENED PLANE JOINT" ON SHEET R-10.1.1 OF THE STANDARD PLANS.
6. THE LENGTH OF THE STEPS MUST BE 15' OR INCREMENTAL INTERVALS OF 15' TO MAINTAIN A 15' SPACING OF THE TRANSVERSE WEAKENED PLANE JOINTS IN THE CONCRETE PAVEMENT. SEE SECTION 409.03.09 OF THE SPECIAL PROVISIONS AND SHEET R-10.1.2 OF THE STANDARD PLANS FOR SAW-CUTTING DETAILS.
7. FILL MATERIAL UNDER APPROACH SLABS SHALL BE A 12" LAYER OF GRANULAR BACKFILL COMPACTED TO NOT LESS THAT 95% OF THE MAXIMUM DENSITY IN ACCORDANCE WITH SUBSECTION 207.03.01 OF THE STANDARD SPECIFICATIONS.
8. SEE PLANS FOR EXPANSION JOINT DETAILS.
9. GALVANIZE ASSEMBLY AFTER FABRICATION OR USE A588 STEEL. ASSEMBLY TO EXTEND FULL WIDTH OR TO THE FACE OF ANY BRIDGE OR BARRIER RAILS. FULL PENETRATION BUTT WELD ANY FIELD SPLICES.

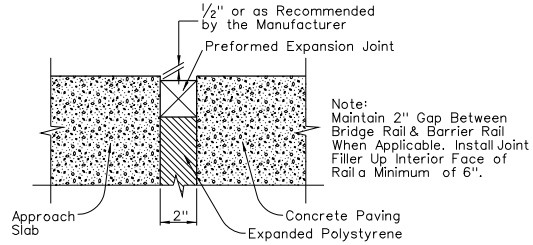

DETAIL D
CONCRETE PAVING OPTION

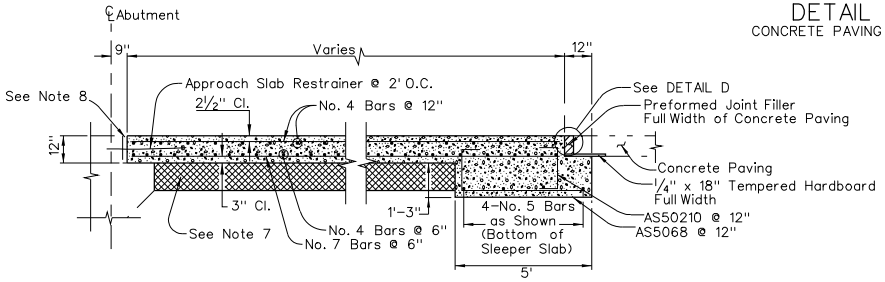

SECTION A-A
SEE DETAIL C FOR PLANTMIX BITUMINOUS PAVING

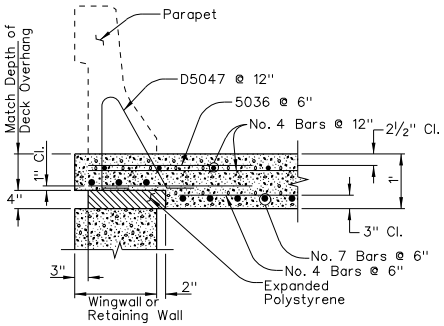

SECTION B-B
When the Approach Slab Extends Beyond the Wingwalls, Extend the Expanded Polystyrene 2" Beyond the Wingwall Ends, Adjust the Approach Slab to its Full Depth & Eliminate the 5036 Bars.

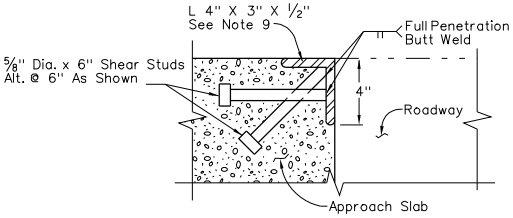

DETAIL E
APPROACH SLAB JOINT PROTECTION
PLANTMIX BITUMINOUS PAVING

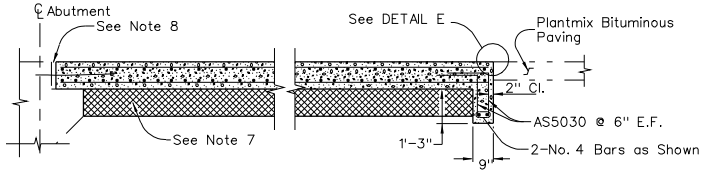

DETAIL C
PLANTMIX BITUMINOUS PAVING
FOR INFORMATION & DIMENSIONS NOT SHOWN SEE SECTION A-A

THIS SHEET IS FOR GENERAL INFORMATION, FOR ACTUAL DIMENSIONS AND REINFORCING STEEL LAYOUTS SEE CONTRACT PLANS.

NEVADA DEPARTMENT OF TRANSPORTATION

APPROACH SLAB

Signed Original On File	B-29.1.1	(502)
CHIEF BRIDGE ENGINEER	ADOPTED 12/90	REVISION 1/05

TYPE 1A – REINFORCED CONCRETE RETAINING WALL
TABLE OF DIMENSIONS AND REINFORCING STEEL

Layout and reinforcement data	Design H	4'	6'	8'	10'	12'	14'	16'	18'	20'	22'	24'	26'	28'	30'
	W	3'-5"	5'-1"	6'-7"	8'	9'-4"	10'-10"	12'-4"	13'-9"	15'-3"	16'-9"	18'-1"	19'-6"	21'-2"	22'-4"
	F	1'-4"	1'-4"	1'-4"	1'-6"	1'-6"	1'-6"	1'-8"	1'-10"	1'-10"	2'-2"	2'-6"	2'-10"	2'-11"	3'-1"
	C	1'	1'-4"	1'-8"	2'	2'-4"	2'-8"	2'-11"	3'-3"	3'-7"	3'-11"	4'-3"	4'-9"	5'-3"	5'-5"
	K	0	0	0	0	0	0	0	0	0	0	0	0	0	0
	Batter, Z	1/2	1/2	1/2	1/2	1/2	1/2	1/2	1/2	1/2	5/8	3/4	7/8	7/8	7/8
	ⓐ bars	–	–	–	–	–	–	–	–	#5@24"	#5@24"	#5@28"	#6@24"	#6@24"	#6@24"
	ⓑ bars	–	–	–	–	#5@24"	#6@24"	#6@16"	#8@16"	#8@12"	#8@12"	#9@14"	#9@12"	#10@12"	#10@12"
	ⓒ bars	#5@12"	#5@12"	#5@12"	#6@12"	#7@12"	#8@12"	#8@8"	#9@8"	#9@6"	#9@6"	#10@7"	#10@6"	#11@6"	#11@6"
	ⓓ bars	#5@12"	#5@12"	#5@12"	#6@12"	#7@12"	#8@12"	#8@8"	#9@8"	#9@6"	#9@6"	#10@7"	#10@6"	#11@6"	#11@6"
	ⓔ bars	#5@24"	#5@24"	#5@24"	#5@24"	#6@24"	#7@24"	#7@16"	#8@16"	#8@12"	#8@12"	#9@14"	#9@12"	#9@12"	#9@12"
	L_1	–	–	–	–	5'-7"	5'-11"	5'-11"	5'-11"	6'-3"	7'-3"	8'-2"	8'-2"	8'-2"	9'-10"
	L_2	–	–	–	–	–	–	–	–	8'-10"	10'-2"	12'-2"	12'-2"	12'-6"	14'-9"
Est'd Qtys	Concrete ft^3/ft	8.9	13.6	18.1	24.1	28.8	34.3	41.9	49.9	56.3	70.9	87.2	105.9	118.3	131.8
	Reinf lbs/ft	34	46	55	77	97	132	187	257	337	375	440	536	677	724
Max Pressure (ksf)	Level Slope w/surcharge	1.3	1.5	1.7	2.0	2.2	2.3	2.6	2.9	3.1	3.4	3.8	4.1	4.2	4.6
	Level Slope @ 0.15g	0.9	1.0	1.2	1.4	1.6	1.9	2.1	2.4	2.6	2.9	3.2	3.5	3.8	4.0
	Level Slope @ 0.40g	1.2	1.3	1.6	1.9	2.1	2.3	2.6	2.9	3.1	3.5	3.9	4.3	4.4	4.8
	Slope ≤ 3:1	0.8	1.0	1.2	1.5	1.8	2.0	2.3	2.6	2.9	3.2	3.6	3.9	4.1	4.5
	Slope ≤ 3:1 @ 0.15g	1.1	1.3	1.6	2.0	2.3	2.6	3.0	3.4	3.7	4.2	4.7	5.1	5.4	5.9

STANDARD BAR LAPS		
BAR #	UNCOATED	EPOXIED
4	20"	23"
5	26"	30"
6	31"	36"
7	39"	45"
8	51"	59"
9	59"	67"
10	75"	85"
11	91"	102"

REINFORCED CONCRETE
RETAINING WALL TYPES 1A & 1B

Backfill Condition	Wall Type Required for Seismic Acceleration	
	0.15g	0.40g
Level backfill w/surcharge	1A	1A
Sloping backfill w/o surcharge	–	
Slope ≤ 3:1	1A	1B
3:1 Slope ≤ 2:1	1B	*

* Special design required

NOTES:

1. FOR GENERAL NOTES SEE B-30.1.3
2. FOR DETAILS NOT SHOWN AND DRAINAGE REQUIREMENTS SEE SHEETS B-30.1.3 THRU B30-1.5.
3. ROUGHEN CONSTRUCTION JOINT SURFACE TO 1/4" AMPLITUDE.
4. GEOTECHNICAL ENGINEER WILL VERIFY MAXIMUM ALLOWABLE BEARING PRESSURES FOR ACTUAL SITE SOIL CONDITIONS.

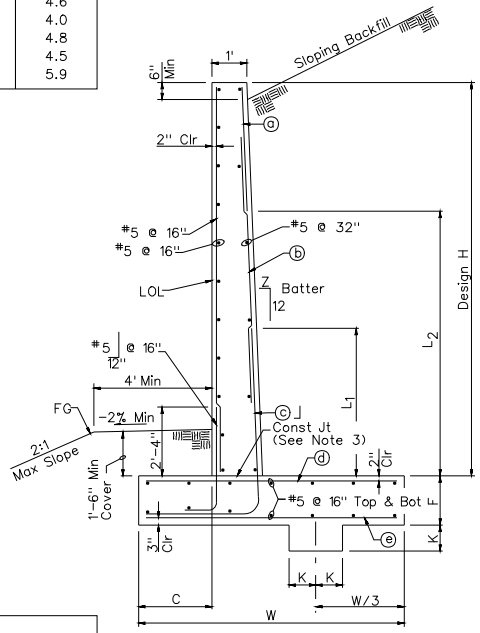

TYPICAL SECTION

TYPE 1B – REINFORCED CONCRETE RETAINING WALL
TABLE OF DIMENSIONS AND REINFORCING STEEL

Layout and reinforcement data	Design H	4'	6'	8'	10'	12'	14'	16'	18'	20'	22'	24'	26'	28'	30'
	W	3'-5"	5'-1"	6'-7"	8'-6"	10'-6"	12'-4"	14'-1"	16'-1"	17'-11"	19'-10"	21'-8"	23'-8"	25'-5"	27'-3"
	F	1'-4"	1'-4"	1'-4"	1'-6"	1'-6"	1'-8"	1'-10"	2'	2'-4"	2'-8"	2'-11"	3'-3"	3'-7"	4'
	C	1'	1'-4"	1'-8"	2'	2'-4"	2'-8"	2'-11"	3'-3"	3'-7"	3'-11"	4'-3"	4'-9"	5'-3"	5'-5"
	K	0	1'	1'	1'	1'	1'	1'	1'	1'	1'	1'	1'	1'	1'
	Batter, Z	1/2	1/2	1/2	1/2	1/2	1/2	1/2	1/2	5/8	3/4	3/4	7/8	7/8	1
	ⓐ bars	–	–	–	–	–	–	–	–	#6@32"	#6@32"	#6@28"	#6@24"	#6@20"	#6@20"
	ⓑ bars	–	–	–	–	#5@24"	#6@20"	#8@20"	#8@14"	#9@16"	#10@16"	#10@14"	#11@12"	#11@10"	#11@10"
	ⓒ bars	#5@12"	#5@12"	#5@12"	#5@10"	#7@12"	#8@10"	#9@10"	#9@7"	#10@8"	#11@8"	#11@7"	#11@6"	#11@10" ℄	#11@10" ℄
	ⓓ bars	#5@12"	#5@12"	#5@12"	#5@10"	#7@12"	#8@10"	#9@10"	#9@7"	#10@8"	#11@8"	#11@7"	#11@6"	#11@10" ℄	#11@10" ℄
	ⓔ bars	#5@24"	#5@24"	#5@24"	#5@20"	#6@24"	#7@20"	#7@20"	#7@14"	#8@16"	#8@16"	#8@14"	#8@12"	#8@10"	#8@10"
	L_1	–	–	–	–	4'-3"	4'-7"	4'-11"	5'-3"	6'-7"	7'-7"	7'-7"	7'-7"	7'-7"	7'-7"
	L_2	–	–	–	–	–	–	–	–	8'-10"	9'-10"	9'-10"	10'-10"	10'-10"	12'-2"
Est'd Qtys	Concrete ft^3/ft	8.9	15.5	20.1	26.8	32.7	40.7	49.2	59.0	74.3	92.0	107.2	129.6	149.6	178.5
	Reinf lb/ft	34	46	55	76	101	153	204	298	370	462	553	710	884	943
Max Pressure (ksf)	Slope ≤ 3:1	0.8	1.0	1.2	1.5	1.6	1.9	2.2	2.5	2.8	3.1	3.4	3.7	3.9	4.4
	Slope ≤ 3:1 @ 0.40g	1.8	2.2	2.7	3.2	3.4	4.0	4.6	5.0	5.7	6.3	6.9	7.4	8.0	8.8
	3:1 < Slope ≤ 2:1	0.8	1.1	1.4	1.7	1.8	2.2	2.6	2.9	3.2	3.6	4.0	4.3	4.6	5.1
	3:1 < Slope ≤ 2:1 @ 0.15g	1.4	1.8	2.3	2.8	3.0	3.6	4.2	4.7	5.3	5.9	6.5	7.0	7.5	8.3

℄ Denotes a bundle of two bars

NEVADA DEPARTMENT OF TRANSPORTATION

TYPES 1A & 1B
CANTILEVER CONCRETE
RETAINING WALLS

Signed Original On File	B-30.1.1	(502)
CHIEF BRIDGE ENGINEER	ADOPTED 12/02	REVISION 7/04

REINFORCED CONCRETE RETAINING WALL TYPE 2		
Backfill Condition	Wall Type Required for Seismic Acceleration	
	0.15g	0.40g
Level backfill w/surcharge	2	2
Sloping backfill w/o surcharge	–	
Slope ≤ 3:1	2	2
3:1 < Slope ≤ 2:1	2	*

* Special design required

STANDARD BAR LAPS		
BAR#	UNCOATED	EPOXIED
4	20"	23"
5	26"	30"
6	31"	36"
7	39"	45"
8	51"	59"
9	59"	67"
10	75"	85"
11	91"	102"

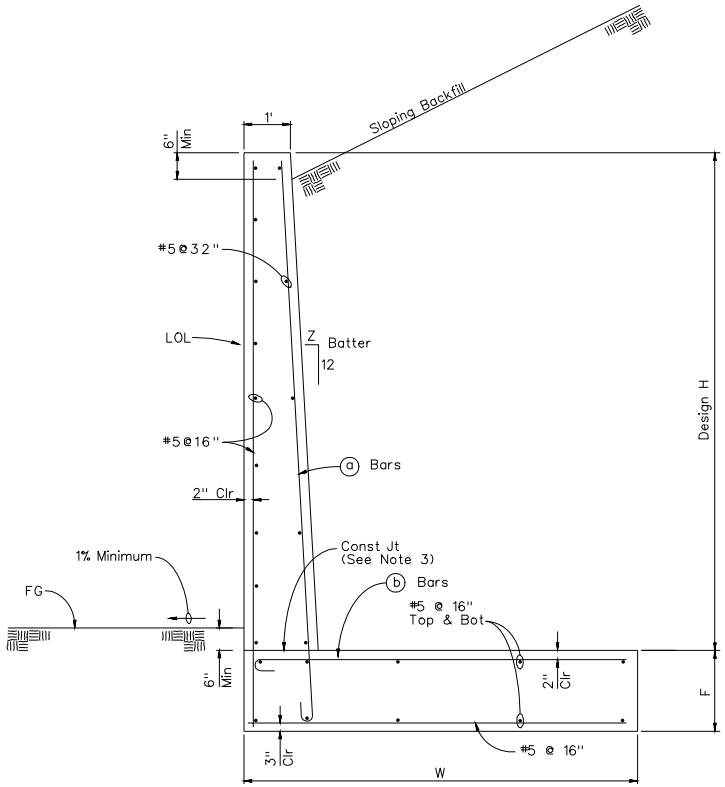

TYPICAL SECTION

TYPE 2 – REINFORCED CONCRETE RETAINING WALL TABLE OF DIMENSIONS AND REINFORCING STEEL						
Layout and reinforcement data	Design H	4'	6'	8'	10'	12'
	W	4'–1"	5'–1"	6'–7"	8'	9'–6"
	F	1'–4"	1'–4"	1'–6"	1'–6"	1'–10"
	Batter, Z	0	0	0	3/8	3/4
	ⓐ bars	#5@12"	#6@16"	#6@12"	#6@10"	#7@10"
	ⓑ bars	#5@12"	#6@16"	#6@12"	#6@10"	#7@10"
Est'd Qtys	Concrete ft^3/ft	9.5	12.8	17.9	23.6	33.9
	Reinf lb/ft	33	45	61	80	111
Max Pressure (ksf)	Level Backfill w/surcharge	1.8	2.4	2.8	3.2	3.7
	Level Backfill @ 0.15g	1.4	1.8	2.1	2.5	2.9
	Level Backfill @ 0.40g	1.6	2.2	2.6	3.0	3.5
	Slope ≤ 3:1	1.2	1.7	2.3	2.7	3.4
	Slope ≤ 3:1 @ 0.15g	1.4	2.1	2.7	3.3	4.0
	Slope ≤ 3:1 @ 0.40g	2.0	3.3	4.3	5.2	6.4
	3:1 < Slope ≤ 2:1	1.3	2.0	2.6	3.1	3.8
	3:1 < Slope ≤ 2.1 @ 0.15g	1.9	2.9	3.8	4.7	5.8

NOTES:

1. FOR GENERAL NOTES SEE B-30.1.3
2. FOR DETAILS NOT SHOWN AND DRAINAGE REQUIREMENTS SEE SHEETS B-30.1.3 THRU B30-1.5.
3. ROUGHEN CONSTRUCTION JOINT SURFACE TO 1/4" AMPLITUDE.
4. GEOTECHNICAL ENGINEER WILL VERIFY MAXIMUM ALLOWABLE BEARING PRESSURES FOR ACTUAL SITE SOIL CONDITIONS.

NEVADA DEPARTMENT OF TRANSPORTATION

TYPE 2
CANTILEVER CONCRETE
RETAINING WALL

Signed Original On File	B-30.1.2 (502)	
CHIEF BRIDGE ENGINEER	ADOPTED 12/02	REVISION 7/04

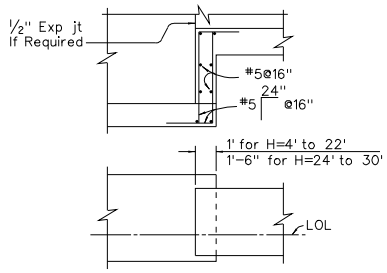

FOOTING STEP

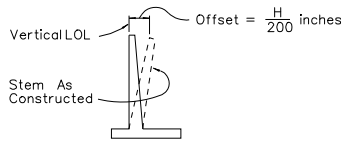

APPROXIMATE WALL OFFSET VALUES

Values For Offsetting Forms To Be Determined By The Engineer

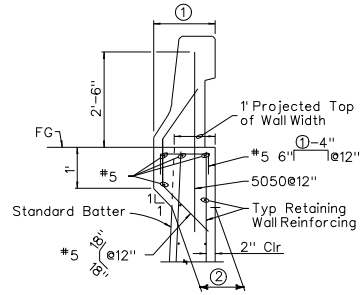

STEM HAUNCH FOR BARRIER RAIL

Dimension ① (Barrier Rail Width) To Be As Shown In the Project Plans. Stem Width ② At Base of Haunch To Be Determined As Shown.

GENERAL NOTES:

1. DESIGN SPECIFICATIONS: AASHTO STANDARD SPECIFICATIONS FOR HIGHWAY BRIDGES, 1996 WITH INTERIMS THROUGH 2000.
2. LOADING: LIVE LOAD SURCHARGE PRESSURE EQUAL TO 2 FEET OF EARTH. SEISMIC ACCELERATION = 0.15g & 0.4g, WHERE 1/2 THE PEAK GROUND ACCELERATION IS USED IN THE DESIGN.
3. CONCRETE: ALL CONCRETE SHALL BE CLASS A OR AA MODIFIED (MAJOR) WITH f'c = 4000 psi AT 28 DAYS.
4. REINFORCING STEEL: ALL REINFORCING STEEL SHALL BE ASTM A615 GRADE 60 OR A706.
5. DESIGN DATA: CANTILEVER WALLS ARE DESIGNED BASED ON THE FOLLOWING PARAMETERS:

   SOIL PROPERTIES:

   INTERNAL ANGLE OF FRICTION = 35°
   UNIT WEIGHT = 120 pcf
   EQUIV. ACTIVE FLUID PRESS.= 36 pcf (LEVEL BACKFILL)
   EQUIV. ACTIVE FLUID PRESS.= RANKINE METHOD (SLOPING BACKFILL)
   EQUIV. PASSIVE FLUID PRESS.= 360 pcf (TOP OF FOOTING DOWN)
   COEFFICIENT OF FRICTION BETWEEN SOIL AND CONCRETE = 0.45

   WALL PROPERTIES:

   STATIC DESIGN BASED ON ALLOWABLE STRESS DESIGN
   fc = 1.6 ksi
   fs = 24 ksi
   n = 8

   SEISMIC DESIGN BASED ON LOAD FACTOR DESIGN
   f'c = 4 ksi
   fy = 60 ksi

   FACTORS OF SAFETY APPLIED
   STATIC OVERTURNING = 2.0
   STATIC SLIDING = 1.5
   SEISMIC OVERTURNING = 1.5
   SEISMIC SLIDING = 1.1
6. RETURN WALLS: RETURN WALL NOT REQUIRED UNLESS SHOWN IN PLANS. FOR DIMENSION (D), SEE PROJECT PLANS.
7. DRAINAGE: DRAINAGE SYSTEM (GUTTER, DRAIN, PIPE) NOT REQUIRED UNLESS SPECIFIED IN THE PLANS.

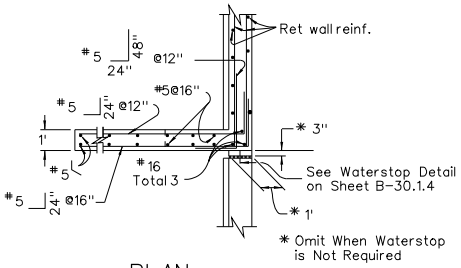

PLAN

For Return Wall Type A

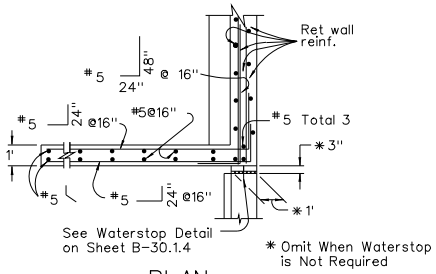

PLAN

For Return Wall Type C

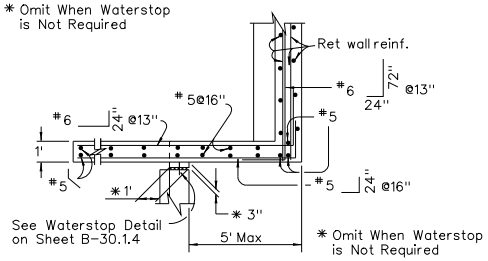

PLAN

For Return Wall Type B

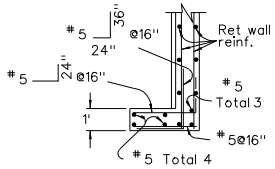

PLAN

For Return Wall Type D

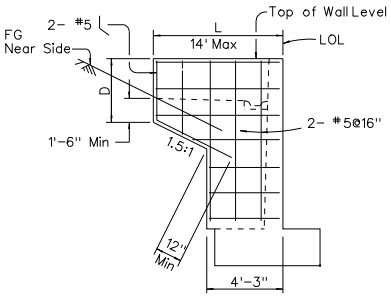

ELEVATION

RETURN WALL TYPE A

Use Where H=8' or Less

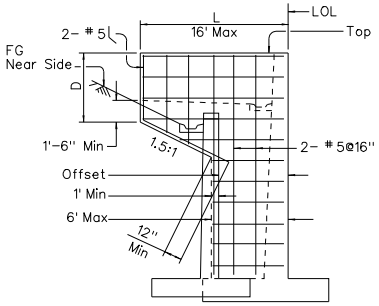

ELEVATION

RETURN WALL TYPE B

Use Where H=10' or More On Offset Walls

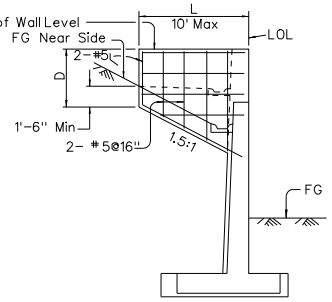

ELEVATION

RETURN WALL TYPE C

Use Where H=10' or More On Straight Walls

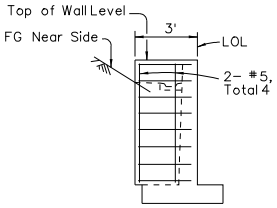

ELEVATION

RETURN WALL TYPE D

Use Where H=6' or Less

NEVADA DEPARTMENT OF TRANSPORTATION

CANTILEVER CONCRETE RETAINING WALL DETAILS No. 1

Signed Original On File	B-30.1.3	(502)
CHIEF BRIDGE ENGINEER	ADOPTED 12/02	REVISION

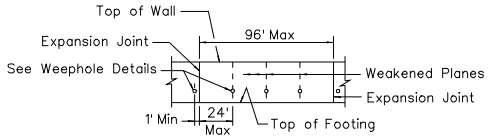

WALL EXPANSION JOINTS AND WEAKENED PLANES

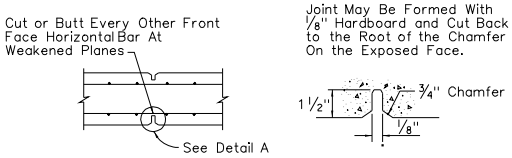

SECTION DETAIL A

WEAKENED PLANES

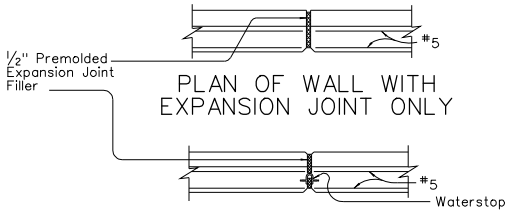

PLAN OF WALL WITH EXPANSION JOINT ONLY

PLAN OF WALL WITH EXPANSION JOINT AND WATERSTOP

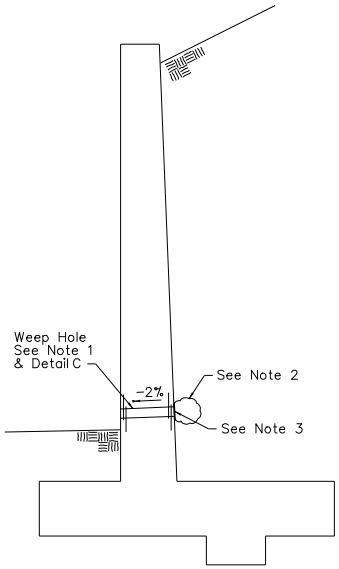

WEEP HOLE

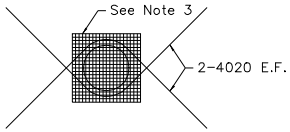

DETAIL C

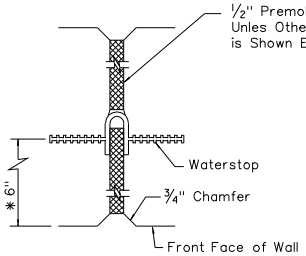

WALL EXPANSION JOINT WITH WATERSTOP

* For Wall Thickness Less Than 12", Use 1/2 the Wall Thickness

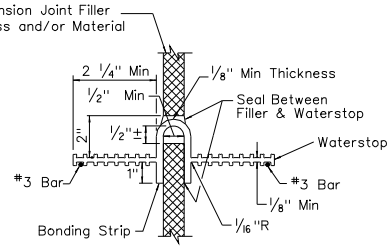

WATERSTOP

WEEP HOLE NOTES:

1. 4" Dia. Drains At 25' Maximum Center to Center. Exposed Drains Shall Be Located 3"± Above Finish Grade.
2. 2 Cubic Feet of Type 2 Drain Backfill Encapsulated In a Geotextile Fabric Securely Tied. Geotexile Shall Meet the Following:
   a) Meet At Least Class 2 Strength Requirement Per AASHTO M288 Test Method.
   b) Have An AOS Not Greater Than U.S. Sieve No. 40.
   c) Have a Permittivity of At Least 0.5 Sec^{-1}.
3. 6" Square Aluminum or Galvanized Steel Wire Mesh Hardware Cloth (4 Openings Per Inch and Minimum Wire Diameter 0.03").

WATERSTOP NOTES:

Holes Will Be Permitted in the Outer 1/2" of the Web For Wire, Rings, etc. Tie Web to No.3 Reinforcing Bars @ 16" Maximum Intervals to Support the Waterstop in Proper Position During Concrete Placement. Alternative Detail May Be Submitted For Approval of the Engineer.

Waterstop to Have 5 or More Pairs of Raised Ribs to Provide 0.1 Square Inches Minimum Rib Cross-Section Area On Each Half of the Waterstop.

NEVADA DEPARTMENT OF TRANSPORTATION

CANTILEVER CONCRETE RETAINING WALL DETAILS No. 2

Signed Original On File	B-30.1.4	(502)
CHIEF BRIDGE ENGINEER	ADOPTED 12/02	REVISION 6/04

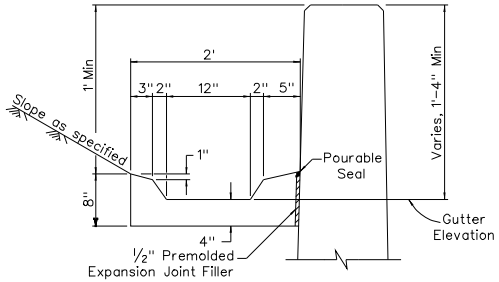

TYPICAL GUTTER DETAIL

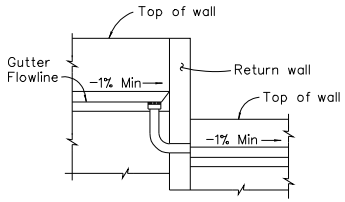

SECTION A-A

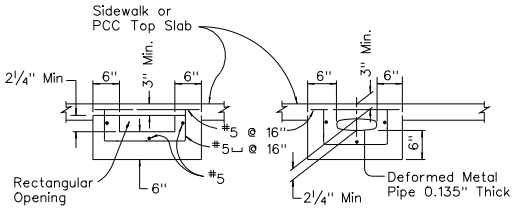

NOTE:
Area of Opening To Be Not Less Than That of Pipe From Wall Gutter. Make Opening Transition in Wall. Edge Opening in Curb Face to 3/4" Minimum Radius.

OUTLET DETAIL - SECTION B-B

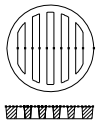

GRATE DETAIL
Sizes To Fit Standard Hubs

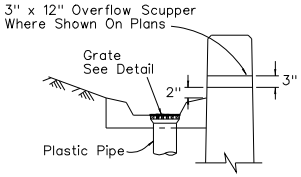

WALL DRAIN DETAIL

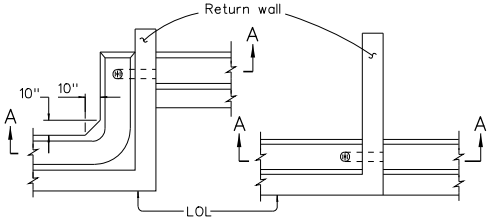

PLAN-OFFSET WALL PLAN-CONTINUOUS WALL

DRAIN THROUGH RETURN WALL

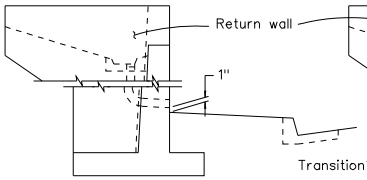

RETAINING WALL, FACE OF WALL OUTLET

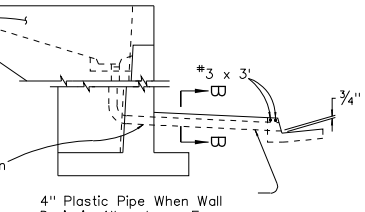

4" Plastic Pipe When Wall Drain is 4" or Less. For Larger Pipe See "Outlet Detail".

RETAINING WALL, GUTTER OUTLET

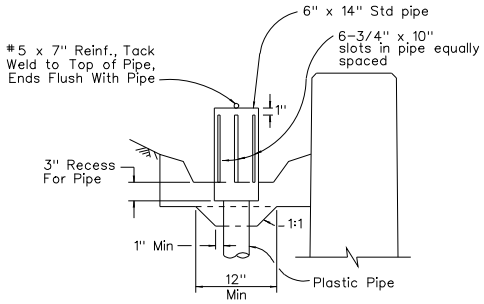

ALTERNATIVE WALL DRAIN WITH PIPE DOME

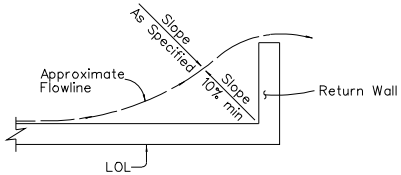

WALL DRAINAGE
WHERE GUTTER NOT REQUIRED

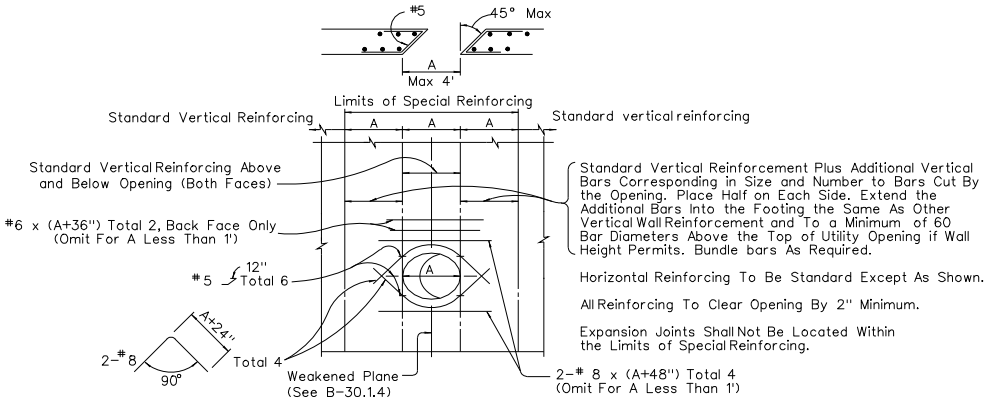

RETAINING WALL UTILITY OPENING
Maximum Size of Opening (A) = 4'

NEVADA DEPARTMENT OF TRANSPORTATION

CANTILEVER CONCRETE RETAINING WALL DETAILS No. 3

Signed Original On File	B-30.1.5	(502)
CHIEF BRIDGE ENGINEER	ADOPTED 12/02	REVISION

2010 ENGLISH STANDARD PLANS INDEX

Description and (Sheet Numbers)	Page
A	
Airplane Monitoring Symbol (T-38.1.6)	T-96
Approach Slab, Bridge (B-29.1.1)	B-21
Approaches, Paved and unpaved (R-S2.1)	R-1
B	
Backfill, Structures and Culverts (R-1.1.1 - R-1.1.5)	R-2 to R-6
Barrier Rail, Concrete Median (R-8.6.2)	R-109
Barrier Rail, Concrete (R-8.6.1)	R-108
Barrier Rail, Portable Precast (R-8.7.1)	R-113
Barrier Rail, Portable Temporary Traffic Screen (R-8.8.1)	R-115
Barrier Rail, Reflectors (R-9.2.2)	R-118
Bridge Slope Paving (B-26.1.1)	B-19
Bridge Approach Slab (B-29.1.1)	B-21
C	
Cattle Guard, BLM (R-7.1.9)	R-90
Cattle Guard, Precast (R-7.1.6)	R-86
Cattle Guard, Precast Sections and Details (R-7.1.6.2 - R-7.1.6.3)	R-88, R-89
Cattle Guard, Steel 12’ to 20’ (R-7.1.1 – R-7.1.1.1)	R-76, R-77
Cattle Guard, Steel 26' to 40' (R-7.1.2 – R-7.1.2.1)	R-78, R-79
Cattle Guard, Steel Timber Foundation (R-7.1.5)	R-84
Cattle Guard, Steel Type B (R-7.1.3 – R-7.1.3.1)	R-80, R-81
Cattle Guard, Steel Type C (R-7.1.4 – R-7.1.4.1)	R-82, R-83
Chain Area Markings (T-35.4)	T-66
CMP, Coupling Band Details (R-2.8.1 – R-2.8.2)	R-34, R-35
CMP, End Sections (R-2.2.1)	R-13
CMP, Metal End Section (Safety Type) For Metal Pipes (R-2.2.2 – R2.2.2.1)	R-15, R-16
CMP, Metal End Section (Safety Type) For Concrete Pipes (R-2.2.3 – R-2.2.3.1)	R-17, R-18
CMP, Slotted Drain (R-2.1.3)	R-11
Concrete Barrier Rail, (R-8.6.1 - R-8.6.2)	R-108, R-109
Concrete Barrier Rail, Vertical Taper (R-8.6.5)	R-112
Concrete Barrier Rail Transition Type A to Type FA (R-8.6.3)	R-110
Concrete Barrier Rail Transition Type A to F-Shape Type A (R-8.6.4)	R-111
Concrete Pavement, Plain Jointed (R-10.1.1)	R-120
Concrete Pavement, Doweled (R-10.1.2)	R-121
Concrete Pavement, Weakened Plane Joints (R-10.1.3)	R-122
Cross Walk Markings, Permanent/Temporary (T-38.1.3)	T-93
Culvert, Safety End Grate (R-2.3.1.1)	R-20
Culvert Bedding (R-1.1.6)	R-7
Culvert Headwalls, CMAP’s (R-2.6.1 – R-2.6.1.1)	R-29, R-30
Culvert Headwalls, CMP’s 12" to 42" (R-2.4.1 – R-2.4.1.1)	R-21, R-22
Culvert Headwalls, CMP’s 48" to 72" (R-2.4.2 – R-2.4.2.1)	R-23, R-24
Culvert Headwalls, Oval RCP’s (R-2.7.1 - R-2.7.1.1 - R-2.7.2)	R-31 to R-33

2010 ENGLISH STANDARD PLANS INDEX

Description and (Sheet Numbers)	Page
Culvert Headwalls, RCP's 12" to 36" (R-2.5.1 – R-2.5.1.1)	R-25, R-26
Culvert Headwalls, RCP's 42" to 72" (R-2.5.2 – R-2.5.2.1)	R-27, R-28
Culvert Installation (R-2.1.1, R-2.1.4)	R-10, R-12
Curb Ramps, Existing Sidewalks (R-5.2.2)	R-59
Curb Ramps, Median Island (R-5.2.3, R-5.2.4)	R-60, R-61
Curb and Gutter (R-5.1.1)	R-56
Curb Ramps, New Construction (R-5.2.1)	R-58
D	
Drainage Ditches and Dikes (R-1.4.1)	R-9
Driveway Geometrics, Type C and Type R (R-5.3.1)	R-62
Driveways, Multi-Family, Commercial, & Industrial (R-5.3.3)	R-64
Driveways, Single Family (R-5.3.2)	R-63
Drop Inlet, Concrete Apron (R-4.2.7)	R-51
Drop Inlet, Pipe Riser Inlet Type 3 (R-4.1.1)	R-41
Drop Inlet, Trench Drain (R-4.2.8)	R-52
Drop Inlet, Type 2 & 2A (R-4.2.1 R-4.2.1.1)	R-42, R43
Drop Inlet, Type 2B (R-4.2.2)	R-44
Drop Inlet, Type 3 (R-4.2.3 – R-4.2.3.1)	R-45, R46
Drop Inlet, Type 7 & 8 (R-4.2.4 – R-4.2.4.1)	R-47, R48
Drop Inlet, Type 10 (R-4.2.5)	R-49
Drop Inlet, Type 11 (R-4.2.6)	R-50
E	
Embankment Protector Type 5 (R-3.1.2)	R-37
Embankment Protector Type 5-2G (R-3.1.3)	R-38
Excavation, Structure and Culverts (R- 1.1.1 - R-1.1.5)	R-2 to R-6
F	
Fence, Bench and Cattle Pass (R-6.2.1)	R-72
Fence, Type C-NV-4B (R-6.1.2 - R-6.1.2.2)	R-67 to R-69
Fence, Type A, B, and C (R-6.1.1)	R-66
Fence, Gate and Fence Details (R-6.1.3)	R-70
Fence, High-Tensile, 8-Wire (R-6.1.4)	R-71
Fence, Chain Link Swing Gates (R-6.3.2, R-6.3.3)	R-73, R-75
Fence, Chain Link with Tortoise Fence (R-6.3.2.1)	R-74
Fill Height, RCP (R-1.1.6)	R-7
Fill Height, Steel Culverts (R-1.3.1.2)	R-8
G	
Gabions (R-3.1.4)	R-39
Gates, Swing (R-6.3.2)	R-73
Guardrail, Bridge/Barrier Rail Connection, Triple Corr. (R-8.4.2, R-8.4.3)	R-103, R-104
Guardrail, Modified (Missing) Post Installation Type 1 and 2 (R-8.3.2)	R-100
Guardrail, Triple Corrugation, Wood Post (R-8.4.1)	R-101
Guardrail, Triple Corrugation, Steel Post (R-8.4.1.1)	R-102
Guardrail, Back Spacing & Deflection Requirements (R-8.3.1)	R-99
Guardrail, Terminals Grading Plan (R-8.2.1)	R-94

2010 ENGLISH STANDARD PLANS INDEX

Description and (Sheet Numbers)	Page
Guardrail, Trailing End Anchor (R-8.2.2)	R-95
Guardrail, Anchor Terminal (R-8.2.4.1)	R-98
Guardrail, Buried End Anchor, W-Beam & Thrie Beam (R-8.2.3)	R-96
Guardrail, W-Beam (R-8.5.1)	R-105
Guardrail, Bridge/Barrier Rail Connection, W-Beam (R-8.5.2, R-8.5.3)	R-106, R-107
Guardrail, Typical Installation (R-8.1.1, R-8.1.2)	R-92, R-93
Guardrail, Special Installation CRT Posts (R-8.2.4)	R-97
Guardrail – Guide Post Reflectors (R-9.2.2)	R-118
Guide Post (R-9.1.1)	R-116
H	
Headwalls, See Culvert Headwalls	
Headwalls, RCB, See RCB(Reinforced Concrete Box)	
Hydraulics - Drop Inlet Concrete Apron (R-4.2.7)	R-51
I	
Intelligent Traffic System (M-1.1 – M-1.14)	M-1 to M-14
L	
Lighting and Signals Section (T-30.1.2 - T-30.1.20)	T-1 to T-31
M	
Mailbox Supports (R-12.1.2 - R-12.1.3)	R-128, R-129
Mailbox Turnouts (R-12.1.1)	R-127
Manhole Cover, Frame and Concrete Collar (R-4.3.3)	R-55
Manhole Type 4 (R-4.3.2)	R-54
Manholes Type 1 & 2, Type 1 & 2 Modified (R-4.3.1)	R-53
Median Crossover Detail (T-35.5)	T-67
O	
Object Markers (R-9.2.1)	R-117
Overhead Signs (T-36.1.1 - T-36.1.17)	T-68 to T-88
P	
Pavement Markings, Ramp Metering and HOV (T-38.1.7)	T-97
Pedestrian Rails, Type "M" & "R" (B-25.1.4, B-25.1.5)	B-15, B-16
Pedestrian Rails, Type “R” (B-25.1.6)	B-17
Pedestrian Rails, Type “V” (B-25.1.7)	B-18
Piles, “HP” Details (B-23.1.4)	B-14
Pipe Connection/Termination Detail, HDPE (R-2.9.1)	R-36
Permanent/Temporary Pavement Markings (T-37.1.1 - T-38.1.6)	T-89 to T-96
Pull Boxes, Lighting and Signals (T-30.1.18)	T-29
Prestressed Girder Details, Cast-In-Place (B-28.1.1)	B-20
R	
Railroad Crossings, Signal, Gate, & Guardrail Detail (T-35.3 - T-35.3.1)	T-64, T-65
RCB (Reinforced Concrete Box & Headwalls) (B-20.1.1 - B-20.1.8)	B-1 to B-13
RCP, End Sections (R-2.3.1)	R-19
Retaining Walls, (B-30.1.1 - B-30.1.5)	B-22 to B-26
Riprap Aprons (R-3.1.4 - R-3.1.5)	R-39, R-40
Roadside Signs (T-31.1.1 - T-31.6.1)	T-32 to T-46

2010 ENGLISH STANDARD PLANS INDEX

Description and (Sheet Numbers)	Page
Rumble Strips, Milled (R-10.1.4)	R-123
Rumble Strips, Approaches, On/Off Ramps (R-10.1.5)	R-124
Rumble Strips, Centerline (R-10.1.6 – R-10.1.6.1)	R-125, R-126
S	
Shoulder Dike, Bituminous (R-1.4.1)	R-9
Sidewalks (R-5.2)	R-57
Sidewalks, Curb Ramps New Construction (R-5.2.1)	R-58
Sidewalks, Curb Ramps Existing Sidewalks (R-5.2.2)	R-59
Signals and Lighting (T-30.1.2 - T-30.1.20)	T-1 to T-31
Slotted Drain (R-2.1.3)	R-11
Striping, See Permanent/Temporary Pavement Markings	
Structure Excavation (R-1.1.1 - R-1.1.5)	R-2 to R-6
Survey Monuments (R-9.3)	R-119
T	
Traffic Control (T-35.1.1 - T-35.1.17)	T-47 to T-62
Traffic Control Devices (T-35.2)	T-63
Traffic Lighting and Signals (T-30.1.2 - T-30.1.20)	T-1 to T-31
Trench Detail, Lighting and Signals (T-30.1.2.1)	T-2
Traffic Loop Detectors (T-30.1.4 – T-30.1.4.4)	T-8 to T-12
W	
Water Lines, Conduit for Future installation (R-5.4.1)	R-65
Weakened Plane Joints Concrete (R-10.1.3)	R-122