ATTACHMENT 01-1
TENTATIVE LIST OF CONCURRENT PROJECTS ADJACENT TO THE PROJECT

This page intentionally left blank.

Tentative List of Concurrent Projects Adjacent to the Project *

No.	Project	Estimated Construction Start	Estimated Construction Complete
NDOT			
1	EA 73796 I-15 North Seismic Retrofits (CL44.13-48.43)	2015Q3	2016Q3
2	EA 73797 I-515 Downtown Viaduct Seismic Retrofit and Bridge Deck Rehab (CL74.35-76.67)	2016Q1	2018Q2
3	PIN 73796 Project No.: NHP-015-1(154) I 15 No. Las Vegas Seismic Retrofit & Rehabilitation (H-948, G-949, G-953, and I-956)	2015Q3	2016Q3
City of Las Vegas			
Roadway Projects			
1	Main Commerce One-Way Couplet - Las Vegas Boulevard to Bonneville	2014Q2	2015Q2
2	Martin L. King Boulevard Improvements - Costco to Metro Headquarters	2013Q3	2015Q3
3	Las Vegas Boulevard Improvements - Sahara to Stewart	2015Q2	2016Q2
4	Rancho Drive Pavement Overlay Mesquite to Charleston	2020	2021
5	Charleston Boulevard Landscaped Median Improvements - 6th to Maryland	2013Q3	2015Q4
6	Alta Drive Complete Street Improvements - Rancho to Main	2017	2018
7	Oakey Avenue Bicycle Lanes - Rainbow to Industrial	2014Q1	2015Q4
8	Main Street Complete Street Improvements - Bonneville to I-515	2013Q4	2015Q3
9	Shadow Lane Complete Street Improvements - Charleston to Alta	2015Q2	2016Q1
10	Charleston Boulevard Complete Street Improvements - Rancho to Shadow	2016Q2	2017Q1
11	Carson Street Bicycle & Pedestrian Improvements - Casino Center to 9th	2015Q4	2016Q3
12	Gass Avenue Bicycle & Pedestrian Improvements - Main to Charleston	2015Q4	2016Q3
13	Coolidge Street Bicycle & Pedestrian Improvements - Main to 4th	2015Q4	2016Q3
14	Martin L. King Boulevard Relocation with Project Neon - Oakey to Charleston	2016	2017
15	6th Street Bicycle & Pedestrian Improvements - Bridger to Stewart	2015Q4	2016Q3
16	Bridger Street Bicycle & Pedestrian Improvements - Main to Las Vegas Boulevard	2013Q2	2015Q2
17	3rd Street Bicycle & Pedestrian Improvements - Charleston to Fremont	2014Q4	2015Q3
Regional Transportation Commission (RTC)			
Area-wide Major Projects – City of Las Vegas			
	No RTC projects identified at this time.		

* Additional projects could be added to the list pending each agency's prioritization and funding availability.

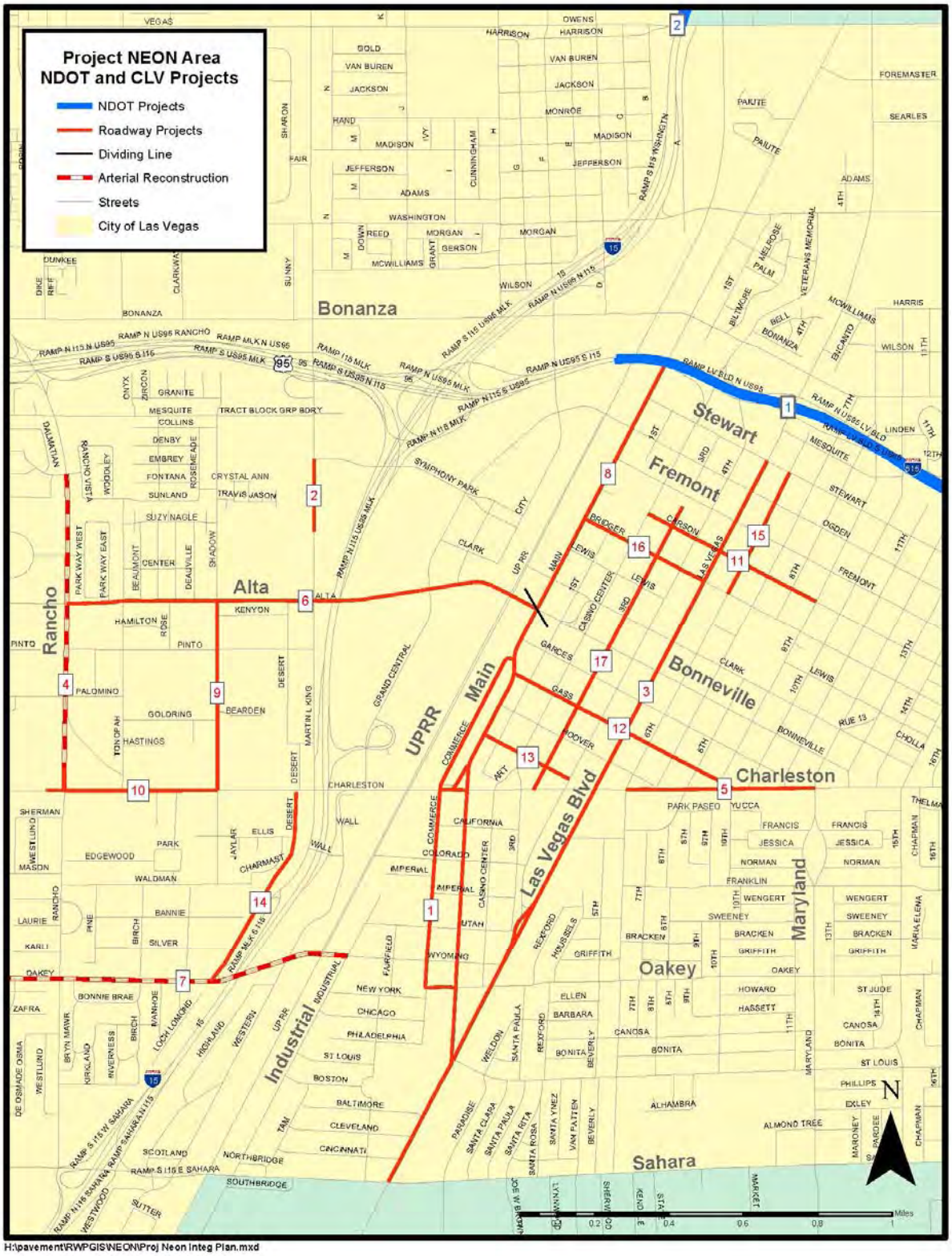

H:\pavement\RWPGIS\NEON\Proj Neon Integ Plan.mxd

ATTACHMENT 01-2
SAFETY AND HEALTH – SAFETY PLAN

1 SAFETY AND HEALTH REQUIREMENTS

Design-Builder shall perform all Work in the Contract in a skillful manner with due regard to the safety and health of its Employees and of the public, and in compliance with all applicable Laws. Design-Builder shall comply with 29 *Code of Federal Regulations* (CFR) Part 1926 regarding the safety and protection of persons employed in construction and demolition Work.

1.1 Occupational Safety and Health

In accordance with Occupational Safety and Health Administration (OSHA) regulations, Design-Builder's employees shall be required to wear protective helmets (hard hats) when there is a possible danger of head injury from impact, from falling or flying objects, or from electrical shock and burns. Additionally, all employees working within an active highway right-of-way (ROW) must wear protective helmets at all times. Helmets are not required for employees within a completely enclosed cab constructed of a steel frame and glass or inside an automobile. Helmets must meet current OSHA standards for impact, electrical shock, and burn protection. Design-Builder's employees will be considered to include everyone on its payroll, as well as employees of Subcontractors, Suppliers, and other personnel on the Site under the direction of Design-Builder.

Design-Builder shall be responsible for performing all necessary planning, supervision, and training activities to ensure that all of the requirements of 29 CFR Part 1926 are fully met for all workers employed in the Work of the Project. Design-Builder shall provide satisfactory evidence to the Department that all current requirements of 29 CFR Part 1926 will be adequately addressed before the start of Work.

1.2 Safety and Protection

1. Design-Builder shall be solely responsible for initiating, maintaining, and supervising all safety precautions and programs in connection with the Work. Design-Builder shall take all necessary precautions for the safety of, and shall provide the necessary protection to prevent damage, injury, or loss to, the following:

    a. All employees employed in the Construction Work and other persons who may be affected thereby.

    b. All Work and all equipment and material to be incorporated therein, whether in storage on or off the Site.

    c. Other property at the Site or adjacent thereto, including trees, shrubs, lawns, walks, pavements, roadways, structures, and Utilities, except as designated for relocation, removal, or replacement as part of the Work.

2. Design-Builder shall take immediate action after an accident to correct the Construction Work methods and conditions that are the apparent cause of the accident.

3. Design-Builder's duties and responsibilities for the safety and protection of the Construction Work shall continue until Final Acceptance, provided, however, that Design-Builder shall retain responsibility for safety and protection related to the Work during the Operating Period as specified in the Contract Documents. Design-Builder shall coordinate the Work with the Department's safety staff.

4. Design-Builder shall comply with the following:

    a. Perform the Work with due regard for the protection of public and private property and the health, welfare, mobility, safety, and convenience of the public, particularly with regard to disabled persons and pedestrians.

    b. When the Work involves use of public ways, provide necessary flaggers and traffic control devices and install and maintain means of reasonable access to all fire hydrants, service stations, warehouses, stores, houses, garages, and other property. Private residential driveways shall be closed only within the specified constraints and requirements for notice contained in the Contract Documents.

    c. Allow the public's travel over any public highway, street, or sidewalk without obstruction or interference except as specified in the Contract Documents. Do not obstruct drainage in roads or natural or constructed drainage ways.

    d. Comply with all instructions received from the Department or local authorities regarding protection of public and private property and the health, welfare, mobility, public safety, and convenience of the public.

    e. Provide reasonable access to the Work area at all times for emergency traffic, such as police, fire, and ambulance units.

    f. Give notice and describe upcoming construction to agencies, owners, tenants, and residents in accordance with the Contract Documents.

1.3 Design-Builder's Safety Obligations

Design-Builder shall perform all actions necessary for safety and be solely and completely responsible for conditions on the Site, including safety of all persons and property on the Site through Final Acceptance. This requirement shall apply continuously for the duration of the Contract and shall not be limited to normal business hours or other time constraints or be reduced or diminished in any way because Design-Builder is not given sole possession of the Site. Design-Builder is fully responsible for the safety of workers engaged upon the Project and all other persons working at or visiting the Site and the protection of the public in the vicinity.

1.4 Design-Builder's Safety Plan

Design-Builder shall submit a written Project-specific Safety Plan that documents Design-Builder's safety policy and identifies and addresses specific health and safety concerns to be encountered on the Project to the Department for review and approval. Before the Work begins, and at regular periods throughout the Contract, Design-Builder's Project supervision staff shall meet with the Department to review and discuss the status of safety issues on the Project. An appropriate notice shall be posted at the job Site that the Safety Plan is available for examination by any worker employed on the Project.

Design-Builder shall implement, review, and update the Safety Plan and introduce a program for assuring that the Safety Plan is followed at all times. Design-Builder shall coordinate with all authorities and relevant entities as necessary to ensure compliance with the Safety Plan.

The Department will monitor and audit Design-Builder's safety performance. The Safety Plan shall provide for the following:

1. Planning, management, and design to avoid hazards
2. Detection of potential hazards
3. Timely correction of hazards
4. Dedication to the protection of the public and the Workers
5. Active participation of all persons involved with the Contract
6. Dedicated safety staff
7. Liaison with the Department's safety monitoring staff
8. Safety training and safety meetings

Design-Builder shall ensure that all its employees and those of the Subcontractors of any tier (including labor-only) are under an obligation at all times to fully conform to the provisions of the Safety Plan.

1.4.1 Content of the Safety Plan

The Safety Plan shall be comprehensive and include all required actions, activities, rules, and mitigation relative to the safety of the Work. The Safety Plan shall include an Emergency Plan and an Incident Management Plan as described in Section 6.5.6 (*Emergency, Unforeseen Utility Disruptions, Hazardous Conditions, Traffic Emergencies, Security, and Loss-of-Access Notifications*) of these Technical Provisions. The Safety Plan shall include, at a minimum, the following items:

1. Policy statement indicating Design-Builder's commitment to safety, goals stated as maximum lost hours, and no loss of life goals
2. Identification of Design-Builder's safety officers, including responsibility definitions, an organization chart, reporting procedures, safety inspection procedures, and audit programs
3. References to all applicable Laws
4. An education and training plan for required training for all Workers, including a separate program and Hazardous Materials communications plan for Workers involved with hazardous and contaminated substances remediation, required toolbox meetings, and required posting of information
5. Procedures to address Project health and safety concerns, including housekeeping, material handling and storage, personal protective equipment, wall and floor openings, scaffolds, ladders, welding, flame cutting, electrical equipment, lock-out or tag-out, motor vehicles, heavy equipment, small tools, concrete forms, steel erection, cranes and hoisting, Work platforms, fire prevention and protection, sanitation, confined space entry, blasting and explosives, and other items
6. Industrial hygiene, including respiratory protection, noise, Hazardous Materials, Material Safety Data Sheets, and lists of hazardous chemicals present

7. Fire protection and prevention
8. Emergency and rescue procedures, including detailed procedures for all types of emergencies, such as, medical, fire, chemical spill, property damage, bomb threat, severe weather, flooding, explosion, and earthquakes
9. Incident investigation, reporting, and record-keeping
10. Policy for substance abuse
11. Security provisions
12. Safety requirements and procedures for surveyors and engineering personnel conducting Site investigations and verification sampling and testing
13. Procedures for compelling worker compliance with health and safety requirements
14. Emergency phone numbers

The Safety Plan shall contain a list of the detailed safety procedures to be followed.

1.4.2 Submittal of the Safety Plan

Before the start of any field Work or construction, Design-Builder shall submit a Safety Plan to the Department in accordance with the requirements of the Contract Documents. Upon receipt of approval, Design-Builder shall issue the complete Safety Plan, which will be based on the safety information contained in the preliminary project management plan in Design-Builder's Proposal along with the incorporated comments of the Department and any other required updating. The Safety Plan shall be a controlled document to be issued by Design-Builder to, at least, the following persons:

1. The Department
2. Design-Builder's Project Manager
3. Design-Builder's Safety Manager
4. Design-Builder's Design Manager
5. Design-Builder's Quality Manager
6. Design-Builder's Construction Quality Manager
7. Design-Builder's Design Quality Manager
8. DB-Related Entities

Other controlled copies shall be distributed as determined by Design-Builder and the Department. Uncontrolled copies shall be issued as considered necessary by Design-Builder.

Design-Builder shall maintain a traceable record of the issuance of the controlled copies, including numbering and acknowledgement of receipt. Revisions to the Safety Plan shall be subject to the provisions of Section 2.1.1 of the Contract and upon approval by the Department, shall be issued to all recipients of the controlled copies and managed in the same way as the controlled copies.

Submission of the required Safety Plan by Design-Builder and its approval by the Department shall not be construed to imply approval of any particular method or sequence for addressing health and safety concerns or to relieve Design-Builder from the responsibility to adequately protect the health and safety of all workers involved in the Project as well as any members of the public who are affected by the Project.

1.4.3 Revisions to the Safety Plan and Procedures

The Department may require a revision to the Safety Plan or any safety procedure in order to ensure compliance with the Contract. Following discussion with the Department, Design-Builder shall issue such revision within 30 Days of receipt of the instruction.

Design-Builder shall review the Safety Plan and any safety procedure in order to revise it in accordance with activities and experiences on the Site. Such revision, from time to time, shall enhance the standards of safety being implemented on the Site. At the very least, procedures shall be reviewed and new procedures issued whenever the character or extent of any activity is changed or a new activity of a different nature is introduced that necessitates such revision.

In addition to such revision, Design-Builder shall conduct a formal review of the Safety Plan once every 6 months on or near the anniversary of NTP. Such formal review shall consider all matters pertaining to safety planning and implementation, including accident reports, inspections, audits, suggestions from meetings, and other sources, such as the Department and hazard analysis reviews. Within 7 Days of finishing this review, Design-Builder shall issue a review report to the Department, giving the conclusions of the review and identifying the revisions to be made to the Safety Plan.

Within 30 Days of the issue of the review report, Design-Builder shall issue a revised Safety Plan for review and approval by the Department in accordance with Section 2.1.1 of the Contract.

1.4.4 Design-Builder's Safety Organization

Design-Builder shall designate a member of the executive team, if it is a corporation or a joint venture, or a principal of the organization who shall be responsible and directly accountable to the Department in all matters concerning safety. Design-Builder shall also require its Project Manager to be responsible and directly accountable to this designated safety board member or principal in all matters concerning safety.

Design-Builder's Project Manager shall be designated as the Emergency Contact Person, with the Deputy Project Manager as an alternate contact. The names of both persons and the telephone numbers at which they can be reached at any time shall be given to the Department and all police agencies in the area. Both individuals shall have full authority and capability to mobilize forces promptly as required to respond to an emergency and protect the public.

Design-Builder's Safety Manager is a Key Personnel and whose Project duties shall be solely connected with the safety aspects of the Project and who shall report directly to the designated safety board member or principal. Such an appointment shall be subject to written acceptance by the Department. The Safety Manager shall meet the minimum qualifications as described in Section 1.6.3 (*Key Personnel*). The Safety Manager shall implement, maintain, and monitor compliance with the Safety Plan and all safety procedures, and shall be based full-time at the Site.

Design-Builder shall provide and maintain an organizational structure that ensures the effective control of the Project's safety assurance tasks by Design-Builder's safety staff. Such staff shall be engaged solely in safety assurance. Responsibilities and task subdivision shall be clearly identified in the Safety Plan, and shall show direct lines of communication and reporting between Design-Builder's Safety Manager and the designated safety board member or principal and between the Design-Builder's Safety Manager and Design-Builder's Project Manager.

Design-Builder shall not remove the appointed Safety Manager without the prior written consent of the Department. Design-Builder shall nominate any replacement at the same time consent is sought.

If the Safety Manager is removed for incompetence or fitness for duty, a suitably qualified and immediately available replacement shall be proposed to the Department within 14 Days of receipt of the notice requiring the removal.

Design-Builder shall provide adequate numbers of supporting personnel for the Safety Manager, including a deputy to act in his/her absence.

Design-Builder shall not begin any Work on the Site until the Safety Manager has been appointed and accepted by the Department and has begun his/her duties on the Site.

Design-Builder shall give authority to the Safety Manager and safety staff to issue "stop Work orders" that instruct employees of Design-Builder and its Subcontractors of any tier, including labor-only Subcontractors, to cease operations and take urgent and appropriate action to make the Site safe and prevent unsafe working practices or other infringements of the Safety Plan or breach of any Laws.

Design-Builder shall require the Safety Manager to verify by inspection that the requirements of Design-Builder's Safety Plan and safety procedures are being strictly complied with. In the event of any noncompliance, the Safety Manager shall forthwith issue an instruction to stop Work until the noncompliance is rectified. Once rectified, Work may resume with approval from the Department.

No Work shall be performed on Site unless Design-Builder's Safety Manager or designated deputy is on Site. Work shall not be performed at the Site unless the specified safety supervisors are on the Site.

1.5 Emergency Plan

Design-Builder's Emergency Plan shall include strategies, techniques, communications, and other plans for responding to Emergencies through Final Acceptance. Design-Builder shall coordinate this approach with the Department. Design-Builder's Emergency Plan at a minimum shall clearly and comprehensively address the following items:

- Communication protocol, process, and contact methods from Design-Builder to the Department describing Design-Builder's plan to respond and act to Emergencies.

- Protocol for communicating information to the emergency service providers regarding access to the Project ROW for emergency vehicles, including Design-Builder's personnel responsibilities for communicating the information.

- Communication protocol for notifying stakeholders and the public, including Design-Builder's personnel responsibilities for communicating the information.

- Proposed personnel available and response times for any Emergency condition requiring attention.

- Proposed personnel roles and responsibilities for responding to any Emergency condition requiring attention.

- Description of the proposed contact methods, personnel available, and response times for any Emergency condition requiring attention outside of normal working hours.

- Identification of all essential functions that need to be performed in the event of an Emergency.

- Identification of actions be taken to mitigate the Emergencies and how these actions will be applied to any Emergency.

- Corrective procedures, if applicable, that will be put in place as a result of the Emergency.

- In the event of an Emergency, Design-Builder shall summarize the Emergency protocol and submit a report to the Department within 5 Business Days of the Emergency.

1.6 Incident Management Plan

Design-Builder's Incident Management Plan shall include strategies, techniques, communications, and other approaches for responding to Incidences through Final Acceptance. Design-Builder shall coordinate this approach with the Department and Design-Builder's Traffic Management Plan. Design-Builder's Incident Management Plan shall address the following:

- Communication protocol, process, and contact methods from Design-Builder to the Department describing Design-Builder's plan to respond and act to Incidences.

- Protocol for communicating information to the emergency service providers regarding access to the Project ROW for emergency vehicles, including Design-Builder's personnel responsibilities for communicating the information.

- Communication protocol for notifying stakeholders and the public. Including Design-Builder's personnel responsibilities for communicating the information.

- Proposed personnel available and response times for any Incident condition requiring attention.

- Proposed personnel roles and responsibilities for responding to any Incident condition requiring attention.

- Description of the proposed contact methods, personnel available, and response times for any Incident condition requiring attention outside of normal working hours

- Identification of all essential functions that need to be performed in the event of an Incident.
- Identification of actions be taken to mitigate the Incidences and how these actions will be applied to any Incident.
- Corrective procedures, if applicable, that will be put into place as a result of the Incident.
- In the event of an Incident, Design-Builder shall summarize the Incident protocol and submit a report to the Department within 5 Business Days of the Incident.

1.7 Not Used

1.8 Inspections

Design-Builder shall notify the Department of any Inspections to be conducted on the Project by the U.S. Department of Labor, OSHA, or other health and safety agencies, and of any resulting closing conference, and to the extent possible, provide the Department with the opportunity to be present at such Inspections and closing conference. Design-Builder shall notify the Department in writing of the results of any health and safety Inspections conducted on the Project by representatives of the U.S. Department of Labor, OSHA, or other health and safety agencies, within 1 Business Day of the completion of the closing conference resulting from such Inspections. If any citations are issued for alleged violations, a copy shall be provided to the Department within 1 Business Day of their receipt by Design-Builder, and a copy of the final disposition of such citations shall also be provided to the Department within 1 Business Day of their receipt by Design-Builder. In addition, Design-Builder shall notify the Department within 24 hours of the details relative to any accident or incident occurring at the Site involving any worker employed working at the Site or delivering material, equipment, or supplies to the Project.

1.9 Reports

Design-Builder shall submit a safety report using Form SAF (shown at the end of this attachment) with the monthly Progress Report described in Section 1.6.1.1.4 (*Progress Report*) of these Technical Provisions.

1.10 Explosives

When the use of explosives is necessary for the prosecution of the Work, Design-Builder shall exercise the utmost care not to endanger life or property, including new work. Design-Builder shall be responsible for all damage resulting from the use of explosives.

Design-Builder shall store explosives in a secure manner in compliance with all Laws and shall clearly mark all such storage places. Where no Laws apply, Design-Builder shall provide satisfactory storage and in general not closer than 1,000 feet from the road or from any building or camping area or place of human occupancy.

Design-Builder shall notify each property owner and public utility company having structures or facilities in proximity to the site of the Work of the intention to use explosives. Design-Builder shall give such notice sufficiently in advance to enable the companies to take such steps as they may deem necessary to protect their property from injury.

1.11 Guarding and Protection

Design-Builder shall be responsible for guarding and protecting open and unattended excavations and other potentially hazardous locations in and adjacent to areas lawfully frequented by any person. Such guarding and protection shall consist of any one, or a combination of, the following:

1. A substantial fence or barricade, at least 4 feet high and mounted on satisfactory supports spaced at intervals of not more than 10 feet. Warning signs reading “DANGER – KEEP OUT” shall be mounted on the fence or barricade, as required by the Department, at no more than 100-foot intervals. The signs shall be 24 inches wide by 16 inches high. The lower portion of the sign shall be white and shall bear the words “KEEP OUT” in 5-inch black letters. The upper portion shall be predominantly red with 5-inch white lettering spelling out the word “DANGER.” The lettering shall be enclosed by an approximately elliptical, white ring and the entire sign bordered in black. All barricades and warning signs shall be furnished, erected, relocated, maintained, and removed as required.

2. A 4-foot extension of the trench sheeting above the ground surface adjacent to the excavation.

3. A substantial covering over the excavation. Where it is possible that vehicles will move over such covering, the covering shall be of sufficient strength to withstand the loading.

1.12 Equipment Involving Radioactive Materials

The use of equipment involving radioactive Materials, including, but not limited to, nuclear density gauges, shall adhere to all applicable regulations, including U.S. Nuclear Regulatory Commission (NRC) regulations, related U.S. Department of Transportation (DOT) regulations concerning transportation of radioactive material, and Nevada Revised Statutes (NRS) 459.010 to 459.290, inclusive, and shall be provided in the Safety Plan submitted to the Department. The Safety Plan shall address in detail transportation and storage of the equipment and operating and emergency procedures. Design-Builder shall provide the name and address of the radiation safety officer. A copy of the owner’s license to possess the radiation source shall also be provided. All equipment operators’ equipment shall be certified as having completed training on the safe and proper use of their specific piece of equipment. A copy of the certification shall be provided to the Department for each operator before their Work on the Project begins.

FORM SAF
Monthly Safety Report Format

Design-Builder's Name: _____

Period Covered (Month and Year): _____

Name of Design-Builder's Safety Manager: _____

Item	Contract Total This Period	Contract Cumulative Total
No. Man-Hours Worked (Construction)		
No. Lost Workday Cases (entire shift lost)		
No. Restricted Workday Cases (partial shift lost or reassigned to "light" duty)		
No. Cases Requiring Medical Attention		
No. Fatalities		
No. On-Site Safety Meetings		
No. On-Site Equipment Accidents		
No. Vehicle Accidents, including off-site accidents by vehicles working on Contract		
No. New Workers on Site During Period		
No. New Worker Safety Orientation		
No. Supervisor/Foreman Safety Sessions		
No. Site Safety Inspections		

1. Describe circumstances surrounding each lost workday and each fatality case.

2. Describe actions taken and/or planned to prevent reoccurrence.

FORM SAF
Monthly Safety Report Format (Continued)

(Signature)	(Signature)
(Printed or typed name) Design-Builder Executive	(Printed or typed name) Design-Builder's Project Manager
(Date)	(Date)

This page intentionally left blank.

ATTACHMENT 01-3
PROJECT MANAGEMENT PLAN

This page intentionally left blank.

This Attachment 01-3 contains the Project Management Plan (PMP) contents and schedule for provision of the component parts.

Legend:

A = Submitted by Design-Builder within 30 Days of initial Notice to Proceed (NTP1) and approved by the Department prior to commencement of Design Work and issuance of final Notice to Proceed (NTP2)

B = Submitted by Design-Builder within 90 Days of NTP1 and approved by the Department prior to commencement of Construction Work

C = Submitted by Design-Builder within 60 Days of initial Notice to Proceed (NTP1) and approved by the Department prior to commencement of Design Work and issuance of final Notice to Proceed (NTP2)

Part	Section	Contents	Required by
1. Project Administration			
	Organization	Organizational diagram	A
	Personnel	Names and contact details, titles, and job roles	A
	Design-Builder's	Design-Builder's contracting Plan	A
	Schedule	Design Submittal portion of the Project Baseline Schedule in accordance with Section 1 (*General Scope of Work*) of the Technical Provisions	A
		Balance of Project Baseline Schedule in accordance with Section 1 (*General Scope of Work*) of the Technical Provisions	B
	Quality Control	Procedures to establish and encourage continuous improvement	A
	Audit	Procedures to facilitate review and audit by the Department	A
		Auditing and management review of Design-Builder's own activities under the PMP	A
		Auditing and management review of Design-Builder's activities and management procedures	A
	PMP Update	Procedures for preparation of amendments and submission of amendments to any part of the PMP	A
	Document Management	The manner in which records will be maintained in compliance with the Technical Provisions, including any specific systems Design-Builder will use	A
		Document management procedures in compliance with Section 1 (*General Scope of Work*) of the Technical Provisions, including EDMS.	A

Part	Section	Contents	Required by
2. Quality Management System and Quality Manual			
	Organization	Design-Builder's main contractual arrangements	A
		Organizational structure covering the activities to be performed in accordance with the Contract Documents	A
	Personnel	Resource plan for Design-Builder and its Subcontractors	A
		Arrangements for coordinating and managing staff interaction with the Department and its consultants including collocation of Key Personnel and description of approach to coordinating work of offsite personnel	A
		Names and contact details, titles, job roles and specific experience required for the Key Personnel and for other principal personnel during design	A
		Names and contact details, titles, job roles of principal personnel for Subcontractors and any third party with which Design-Builder will coordinate activities	A
2A. Design Quality Management Plan			
	Organization	Design-Builder's main contractual arrangements	A
		Organizational structure covering the activities to be performed in accordance with the Contract Documents	A
	Personnel	Resource plan for Design-Builder and its Subcontractors	A
		Arrangements for coordinating and managing staff interaction with the Department and its consultants, including collocation of Key Personnel and description of approach to coordinating work of offsite personnel	A
		Names and contact details, titles, job roles, and specific experience required for the Key Personnel and for other principal personnel during Design Work	A
		Names and contact details, titles, and job roles of principal personnel for Subcontractors and any third party with which Design-Builder will coordinate activities	A
	Offices and Equipment	Description of the necessary offices and office equipment to be provided by Design-Builder during Design Work	A

Part	Section	Contents	Required by
	Design-Builder's	Overall control procedures for Design-Builder's, including consultants and subconsultants	A
		Responsibility of Design-Builder's and affiliates	A
		Steps taken to ensure Design-Builder's and Suppliers meet the obligations imposed by their respective Contracts	A
	Interfaces	Interfacing between Design-Builder, Subcontractors, and independent certifiers during Design Work, including interfaces between the structural design auditor, the safety auditor, and any quality reviewer	A
		Coordination with Utility Owners	A
	Environmental	Control of the interactions between environmental requirements (including landscaping) and the Design Work of the Project	A
	Procedures	Procedures describing how the principal activities will be performed during the design stage: to include geotechnical site investigation, surveys and mapping, environmental management, safety audit, structural audit, and checking	A
	Quality Control/Quality Assurance	Quality control and quality assurance procedures, including a resource table for monitoring and auditing all design services, design review and certification, and verification of plans	A
		Procedures for environmental compliance	A
		Procedures to establish Design-Builder's hold points in the design process where checking and review will take place	A
		Procedures to ensure accuracy, completion, and quality in submittals to the Department and Governmental Entities	A
		Procedures to establish and encourage continuous improvement	A
	Audit	Name of Design-Builder's representative(s) with defined authority for establishing, maintaining, auditing and reporting on the Design Quality Management Plan (DQMP)	A
		Names, titles, roles, and responsibilities of supporting quality management staff reporting to the person with defined authority	A
	Document Management	The manner in which records will be maintained in compliance with the Technical Provisions, including any specific systems that Design-Builder will use	A
		Document management procedures in compliance with Section 3 (*Design Quality Management*) of the Technical Provisions	A
		Identify environmental documentation and reporting requirements for the Environmental Compliance	A

Part	Section	Contents	Required by
		Plan	
2B. Construction Quality Management Plan			
	Organization	Design-Builder's main contractual arrangements	A
		Organizational structure covering the activities to be performed in accordance with the Contract Documents	A
	Personnel	Resource plan for the Design-Builder and its Subcontractors	B
		Arrangements for coordinating and managing staff interaction with the Department and its consultants including collocation of Key Personnel and description of approach to coordinating work of offsite personnel	B
		Names and contact details, titles, job roles, and specific experience required for the Key Personnel as related to Construction Work	A
		Names and contact details, titles, and job roles of principal personnel for Subcontractors and any third party with which Design-Builder will coordinate its activities	B
		Procedures for implementation of environmental compliance and mitigation training program for all employees in accordance with Section 7 (*Environmental*) of the Technical Provisions	B
	Offices and Equipment	Description of the necessary offices and office equipment to be provided by Design-Builder during Construction Work	A
	Design-Builder's	Overall control procedures for Design-Builder's, including consultants and subconsultants	B
		Responsibility of Design-Builder's and affiliates	B
		Steps taken to ensure Contractors and Suppliers meet the obligations imposed by their respective Contracts	B
		Procedures for implementation of environmental compliance and mitigation training program for employees of Contractors in accordance with Section 7 (Environmental) of the Technical Provisions	B
	Interfaces	Interaction among Design-Builder and Subcontractors, during Construction Work	A
	Procedures	List of Project-specific construction procedures	B
		Detailed procedure for each major Construction Work activity whether directly undertaken or subcontracted to include pavement, structures, drainage, and communications	B
		Construction transportation management plan	B

Part	Section	Contents	Required by
	Quality Control/Quality Assurance	Construction monitoring plan	B
		Construction monitoring program (environmental)	B
		Procedures for environmental compliance	B
		Control, identification, and traceability of materials, including any material or samples temporarily or otherwise removed from Site for testing or other reasons.	B
		Examinations and audits of Construction Work; review of examination and audit; issue of certificates	B
		Observation and reporting of all tests in compliance with Section 4 (*Construction Quality Assurance, Quality Control, and Oversight*) of the Technical Provisions	B
		Procedures for tests and inspections for the purpose of the Design-Builder's certifying that prior to burying, each part of the Work is complete and conforms to the Contract Documents.	B
		Quality control and quality acceptance procedures, including a resource table for monitoring and auditing during any construction work and testing undertaken by Design-Builder's and Suppliers both onsite and offsite	B
		Procedures to establish Design-Builder's hold points in Construction Work	B
		Procedures to ensure accuracy, completion, and quality in submittals to the Department and Governmental Entities	B
		Procedures to establish and encourage continuous improvement	A
	Audit	Inspection and test plans that identify the pro forma and/or databases to be used for recording the inspection and test results, and methodology for transmitting acceptance testing and inspection reports to the Department	B
		Name of Design-Builder's representative with defined authority for establishing, maintaining, auditing, and reporting on the Construction Quality Management Plan (CQMP)	A
		Names, titles, roles, and responsibilities of supporting quality management staff reporting to the person with defined authority	B
	Document Management	The manner in which records will be maintained in compliance with the Technical Provisions, including any specific systems that Design-Builder will use	B
		Document management procedures in compliance with Section 4 (*Construction Quality Assurance, Quality Control, and Oversight*) of the Technical Provisions	A

Part	Section	Contents	Required by
3. Environmental Management			
	Organization	Design-Builder's main contractual arrangements	A
		Organizational structure covering the activities to be performed in accordance with the Contract Documents	A
		Environmental contact tree	A
	Personnel	Resource plan for Design-Builder and its Subcontractors	B
		Arrangements for coordinating and managing staff interaction with the Department and its consultants, including collocation of Key Personnel and description of approach to coordinating work of offsite personnel	A
		Names and contact details, titles, job roles, and specific experience required for Key Personnel and for other environmental personnel	A
		Implement environmental compliance and mitigation training program for all employees in accordance with Section 7 (*Environmental*) of the Technical Provisions	A
	Design-Builder's	Overall control procedures for Design-Builder's, including consultants and subconsultants	A
		Responsibility of Design-Builder's and affiliates	A
	Environmental	Environmental Compliance and Mitigation Plan (ECMP)	B
		Environmental Management System (EMS)	B
		Environmental compliance and mitigation training program	A
		Spill Prevention Plan	B
		Hazardous Materials Management Plan (HMMP)	B
	Quality Control and Quality Acceptance	Procedures to ensure accuracy, completion, and quality in submittals to the Department and Governmental Entities	A
		Procedures to establish and encourage continuous improvement	A
		Procedures for environmental compliance	A
	Audit	Names, titles, roles, and responsibilities of supporting quality management staff reporting to the person with defined authority	B
	Document Management	The manner in which records will be maintained in compliance with Section 1 (*General Scope of Work*) of the Technical Provisions, including any specific systems that Design-Builder will use	A
		Identify environmental documentation and reporting requirements	A

Part	Section	Contents	Required by
4. Public Involvement Plan			
	Organization	Design-Builder's main contractual arrangements	A
		Organizational structure covering the activities to be performed in accordance with the Contract Documents	A
	Personnel	Resource plan for the Design-Builder and its Subcontractors	A
		Arrangements for coordinating and managing staff interaction with the Department and its consultants, including collocation of Key Personnel and description of approach to coordinating work of offsite personnel	A
		Names and contact details, titles, job roles, and specific experience required for Key Personnel and for other principal personnel	A
		Names and contact details, titles, and job roles of principal personnel for Subcontractors and any third party with which Design-Builder will coordinate its activities	A
	Offices and Equipment	Description of the necessary offices and office equipment to be provided by Design-Builder during Design Work	A
	Design-Builder's	Overall control procedures for Design-Builder's, including consultants and subconsultants	A
		Responsibility of Contractors and affiliates	A
		Steps taken to ensure Design-Builder's and Suppliers meet the obligations imposed by their respective Contracts	A
		Procedures for implementation of environmental compliance and mitigation training program for employees of Design-Builder	A
	Interfaces	Community Outreach Plan in accordance with Section 6 (*Public Involvement*) of the Technical Provisions	A
		Procedures for liaison with the public, the media, and other customer groups in accordance with Section 6 (*Public Involvement*) of the Technical Provisions and the press media policy of the Department. Proposed website configuration, layout, and content. Activation of Project website and hotline.	A
		Procedures to coordinate with Projects stakeholders such as municipalities, counties, Metropolitan Planning Organizations (MPOs), RMAs, and other customer groups	A

Part	Section	Contents	Required by
	Procedures	Procedures describing how the principal activities will be performed	A
	Quality Control	Quality control procedures including a resource table for monitoring and auditing all public information and communication services	A
		Procedures to ensure accuracy, completion, and quality in submittals to the Department, Governmental Entities, and customer groups	A
		Procedures to establish and encourage continuous improvement	A
	Audit	Name of Design-Builder's representative with defined authority for establishing, maintaining, auditing, and reporting on the PMP	A
		Names, titles, roles, and responsibilities of supporting quality management staff reporting to the person with defined authority	A
	Document Management	The manner in which records will be maintained in compliance with the Technical Provisions, including any specific systems that Design-Builder will use	A
		Document management procedures in compliance with Section 1 (*General Scope of Work*) of the Technical Provisions	A
5. Safety Plan			
	Organization	Policies, plans, training programs, Site controls, and Incident response plans to ensure the health and safety of personnel involved in the Project and the general public affected by the Project	B
		Procedures for immediately notifying the Department of all Incidents arising out of or in connection with the performance of the Work	B
	Personnel	Resource plan for the Design-Builder and its Subcontractors	B
		Arrangements for coordinating and managing staff interaction with the Department and its consultants, including collocation of Key Personnel and description of approach to coordinating work of offsite personnel	B
		Names and contact details, titles, job roles, and specific experience required for Key Personnel and for other principal personnel	B
		Names and contact details, titles, and job roles of principal personnel for Subcontractors and any third party with which Design-Builder will coordinate its activities	B
	Procedures	Safety Plan with the minimum requirements described in Attachment 01-2 (*Health and Safety – Safety Plan*)	B

Part	Section	Contents	Required by
	Incident Management Plan	Incident Management Plan intended to address unplanned events or incidents for significant projects to ensure Incident response operations within the Project are managed effectively. The plan identifies priorities and procedures for detection and response to Incidents with the goal of safeguarding the public and restoring traffic flow as quickly as possible. The plan should define a process of regular review and analysis to identify actions that will reduce Incident frequency and severity.	B
6. Communications Plan			
	The manner in which Design-Builder's organization will respond to unexpected requests for information, communicate changes or revisions to necessary Design-Builder personnel, and notify affected stakeholders before and after changes are made		A
	Processes and procedures for communication of Project information between Design-Builder's organization and the Department		A
7. Transportation Management Plan			
	The Transportation Management Plan at a minimum, the content described in Section 12.3 (*Transportation Management Plan*)		C
8. Preliminary L&A Plan			
	The revised Preliminary L&A Plan at a minimum the content described in Section 5.3.1 (*Preliminary Landscape and Aesthetic Plan*).		C

This page intentionally left blank.

ATTACHMENT 01-4
PROJECT SCHEDULE

This page intentionally left blank.

PROJECT SCHEDULE

General

Design-Builder shall prepare and submit Project Schedules as specified herein showing the order in which the Work is proposed to be carried out.

Project Baseline Schedule – This time-scaled, resource-loaded, and cost-loaded Critical Path Method (CPM) network shall depict the milestones, durations, sequences, and interrelationships that represent Design-Builder's Work plans; Design-Builder's work breakdown structure (WBS) for designing, constructing, and completing the Project; from the date of Notice to Proceed (NTP) 1 to Final Acceptance. Design-Builder shall organize the Project Baseline Schedule to conform to WBS Level IV for Design and Construction Activities.

Design-Builder shall not construe the approval of any schedule submitted to assign responsibility of performance or contingencies to the Department or relieve Design-Builder's responsibility to adjust forces, equipment, and work schedules as may be necessary to ensure completion of the Work within the Project Schedule Deadlines.

In addition to hard copies of plots and reports, Design-Builder shall submit the electronic copy of any Project Schedule in .xer or an approved compatible format, which can be accessed by the Department's current version of the Primavera scheduling program. The submittal of satisfactory supplemental Project Schedules, including Project Baseline Schedule, Project Status Schedule, and recovery schedule, shall be considered as a necessary portion of the Work.

The Project Status Schedule and recovery schedule shall not alter the logic previously established in the Project Baseline Schedule unless approved by the Department in writing.

Definitions

The following definitions shall apply to the Project Schedule:

Activity – A task that is a definable part of the overall project. The task must be performed in order to complete the work defined in the Contract. An Activity has interrelationships, and is measurable by resource and time.

Level IV – A WBS that depicts Activities by package/area/facility/craft/crew, establishes a sequence for and interrelationship between Activities, and allows tracking of Activity progress with its associated resources.

Revised Project Baseline Schedule – Incorporates revisions to the Project Baseline Schedule subject to the approval of the Department.

Total Float – The amount of time that an Activity may be delayed without delaying the Substantial Completion Date.

Updated Schedule – The most current schedule in effect, which incorporates actual progress and sequence of activities to date, projected completion dates and proposed logic changes for future work, and approved Change Orders and/or time extensions.

For definitions not specified in this Attachment 01-4, refer to Appendix 1 of the Contract.

Schedule Requirements

General

a) The work shall be scheduled to show the completion of the Contract within the Completion Deadlines.

b) Schedule start date shall be NTP1.

c) Design-Builder shall establish project specific calendars for the work. Design-Builder shall provide a list of non-work days, which include holidays and weather days. Holidays shall be established pursuant to the Contract. Additional holidays not recognized by the State of Nevada, such as union holidays, may be included as approved by the Department.

d) Design-Builder shall submit tabular reports detailing the Predecessors and Successors and a report sorted by Total Float with every schedule submittal except the weekly look-ahead schedule. Basic schedule and tabular reporting templates shall be submitted by Design-Builder.

e) All out of sequence logic conditions shall be corrected by adding new activities and relationships as opposed to deleting activities. Alternative approaches to correcting out of sequence activities shall be submitted and accepted by the Department prior to incorporating such corrections into the schedule.

f) Activities shall not be deleted from the schedule. If the scope of work associated with an Activity has been removed through a Change Order, Design-Builder shall set the Activity's duration to zero, change the status to complete, and add "DELETE" to the description.

g) Design-Builder shall establish the resource dictionary. The resource dictionary shall include labor and equipment. Labor may be represented by work crews, labor classifications, and/or individual names. If utilizing work crews, the composition of each crew shall be detailed and included as an appendix to the Project Baseline Schedule narrative report.

h) Design-Builder shall use the precedence diagramming methods. The WBS of the Project Baseline Schedule shall be formatted in a manner consistent with the requirements of the Contract Documents.

i) Failure to include any element of work required for performance of this Contract in the Preliminary Baseline Schedule, the Project Baseline Schedule, the Updated Schedule, or Revised Project Baseline Schedule will not excuse Design-Builder from completing work required to achieve Completion Deadlines, notwithstanding acceptance of schedule submittals.

j) Schedule submittals shall not be used to notify the Department of owner caused delays or to request additional contract time. Formal notice and requests are required per applicable Contract provisions. The Department's acceptance of a schedule that shows work being performed later than the Completion Deadline(s) shall not be construed as approval to extend the contract time.

Activity Requirements

a) A critical path Activity shall be defined as a current Activity located on the longest path. Not more than 50% of activities in the schedule can be critical or near critical. Near critical is defined as having a float value of five (5) days or less. The Design-Builder shall submit any proposed constraints in the schedule to the Department for approval.

b) Schedule activities shall be cost and resource loaded. Resource loading shall include all major equipment and hours for each resource. The resource dictionary shall be used to assign the required resources to each Activity. There shall be no more than one driving resource per Activity. All schedules shall be “scheduled” and “resource leveled” using the driving resources. The Activity ID numbering, scope of work, and descriptions of activities shall remain the same as the accepted Project Baseline Schedule.

c) The sum of all cost loaded activities shall equal the current Contract Price.

d) Activity descriptions shall briefly convey scope and location of work indicated. The description shall consist of a verb or work function (e.g.; form, pour, excavate), an object (e.g.; slab, footing), and area/location (e.g.; bent 200, northeast corner).

e) The schedules shall reflect any Department activities such as review times and third party activities.

f) The work activities shall be subdivided to identify the staging of construction through the use of coding structure within Primavera. The coding structure can use either the WBS or Activity code structures and shall subdivide area, sub-area, discipline, stage, phase, and reference to sheet and specification sections.

g) Work Activity durations shall not exceed 30 days in length for design activities and 14 days in length for construction activities. Exceptions would include procurement activities and Work activities that may be considered routine once they are initiated, as approved by the Department. No work Activity shall have an associated cost over $500,000, unless otherwise approved by the Department.

h) Should a work Activity require more than fifteen (15) calendar days, it shall be subdivided to appropriate work activities. The Department reserves the right to require more detailed sequences of work activities as deemed necessary to review the schedule or monitor the Work.

i) With the exception of the first (start) and the last (finish) milestone activities, all other activities shall be logically tied to appropriate predecessors and successors.

j) The Contract milestones dates and any Department furnished equipment availability date, as described in the Contract Documents, shall be unique zero duration activities containing corresponding dates and logic ties. These activities shall be designed as either "start" or "finish" milestones. Each milestone Activity shall constrain its dependent Work. Calculation of constraint dates for milestones shall assume NTP1 is given at day zero.

k) Leads or lags shall not be used when the creation of an Activity will perform the same function (e.g. concrete cure time). Lag durations shall not have a negative value. The use

of interrelation constraints such as leads and lags on activities shall be explained in the narrative and submitted to the Department.

l) Use of mandatory start or finish constraints, start on, expected finish and zero Total Float constraints shall not be used in the Project Baseline Schedule, Revised Project Baseline Schedule, Recovery Schedule, or Updated Schedules without the approval of the Department.

m) Design-Builder shall provide an analysis of the network diagram that includes the following information as a minimum for each Activity:

1. Preceding and succeeding event numbers
2. Activity description and number
3. Estimated duration of activities
4. Early start date (by calendar date)
5. Early finish date (by calendar date)
6. Late start date (by calendar date)
7. Late finish date (by calendar date)
8. Total Float
9. Activity constraints

n) Activities shall be coded to allow for the following summaries:

1. Responsible party for the accomplishment of each Activity, i.e., Design-Builder, Subcontractor, Department, or Utility Owner. Only one party can be responsible for an Activity.
2. Phase/stage during which Activity is planned to be accomplished, including design.
3. Area/location, i.e., bridges, ramps, or mainline station.

o) Material quantities for each Activity shall be indicated in the resource fields when they become available. Material descriptions such as concrete, asphalt, guide railing, and signs shall be used.

Schedule Submittals

Preliminary Project Baseline Schedule (90-Day Schedule)

For the first 90 Days following NTP1, the Design-Builder will proceed with Work as described in the Preliminary Project Baseline Schedule submitted by Design-Builder with its Proposal and as accepted by the Department.

Project Baseline Schedule

The Project Baseline Schedule shall contain Design-Builder's detailed activities and sequencing for all Work. It is essential that the Project Baseline Schedule present a clear understanding of the staging of construction. This shall be reflected in the coding structure in the schedule. Design-Builder shall, unless directed otherwise by the Department, use the Project Baseline Schedule as target for required comparisons to the current updates in tabular reports, bar charts, physical progress curves or any other comparisons requested by the Department.

The Project Baseline Schedule activities shall indicate Design-Builder's best estimate for original durations, early dates, late dates, logic ties, constraint dates, and Total Float. Activities shall be scheduled in the sequence Design-Builder intends to perform the work.

The Project Baseline Schedule must be consistent with the Preliminary Project Baseline Schedule submitted in Design-Builder's Proposal.

The Project Baseline Schedule shall contain the Activity sequence for major material and equipment procurement, including submittal preparation, reviews by the Department and others, fabrication, and delivery. Procurement items that may contain multiple submittals occurring at different times shall be divided into separate Activity sequences that can be tracked on an individual basis.

Design-Builder shall incorporate into the Project Baseline Schedule all Project activities, activities for procurement and delivery of materials and equipment, activities assigned to Subcontractors, Design Reviews, and all Utility Work or Work by other Subcontractors within or near the Site.

Design-Builder shall incorporate into the Project Baseline Schedule and Project Status Schedule the Department's Project ROW for the activities described in Section 21.3 (*Project ROW Acquisition Status*).

Activities shall include the Contract deliverables, such as Submittal of design documents, permit applications, material samples, shop drawings, working drawings, Inspection and Testing Plans, safety and security plans. Activities that may affect progress shall be reflected, as well as those of affected utility companies and other similarly involved third parties. Any such activities set forth in the Contract Documents shall be reflected on the Project Baseline Schedule.

Once the Project Baseline Schedule is accepted by the Department in accordance with the PMP, it shall become the basis for the Updated Schedule.

Design-Builder shall submit six copies of the Project Baseline Schedule in accordance with the requirements of Section 1.6.1.1.1 of the Technical Provisions and Section 3.2.2.1 of the Contract. Design-Builder shall designate at the time of submittal, in writing, an authorized representative who will be responsible for the preparation, revision, and updating of the Project Schedules. Design-Builder shall participate in review and evaluation sessions of the Project Baseline Schedule with the Department, as requested, and shall provide requested revisions to the Project Schedule within 10 Days.

Design-Builder shall provide a plot of the Project Baseline Schedule in an acceptable size, scale, and format showing the order and interdependence of activities and the sequence of work. Critical activities shall be distinguished on all reports by the use of color or other acceptable means. Successors may not be required for certain activities that are not on the Project Schedule Critical Path, if it can be reasonably assumed that the Activity in question is not critical and must be completed sometime before Substantial Completion Deadline for Final Acceptance Date.

Monthly Project Status Schedule

Design-Builder shall provide six copies of monthly Project Status Schedule and reports together with an electronic copy in .xer or approved format showing the activities, or portions of activities, completed during the reporting period. Design-Builder shall state the percentage of the Work actually completed and scheduled, the remaining duration, and the progress along the Critical

Path in terms of Days ahead or behind the allowable dates as of the report date. Design-Builder shall indicate any changes made to the Project Baseline Schedule. Changes to the baseline schedule will only be allowed as approved by the Department. Design-Builder shall participate in a review and evaluation of the monthly update with the Department, as requested, and provide requested revisions to the monthly update within 10 Days.

Failure to Provide an Acceptable Schedule

Any failure or delay in the submittal or approval of a Project Baseline Schedule, monthly Project Status Schedule, or recovery schedule shall not result in any time extension under the Contract.

ATTACHMENT 02-1
QUALITY MANUAL

This page intentionally left blank.

ATTACHMENT 02-1
QUALITY MANUAL

1. As a component of the Project Management Plan (PMP), Design-Builder's Quality Manager shall establish and maintain a comprehensive Quality Manual that describes the Quality Management System (QMS) for all aspects of the Project Work. The Quality Manual shall establish the quality policy and quality objectives for all aspects of the Work. It shall also describe the processes that are to be established, implemented, controlled, and continually improved to achieve the aforementioned quality objectives.

2. The quality objectives shall be specific and measurable, consistent with the quality policy and linked to meeting the needs and performance expectations of the Department with regard to the Project. The QMS described in the Quality Manual shall include all of the activities required to achieve these quality objectives, including project controls such as scope, cost, schedule, and general document control management activities. All of these activities shall be subject to internal and external quality audits.

3. The Quality Manual shall describe the organization and reporting relationships of Design-Builder-Related Entities involved in performing the Work and how key quality management activities such as the management of project controls, design, construction, traffic, and environmental activities shall interface with each other.

   The Quality Manual shall also provide an organizational chart showing the Department's Quality Oversight relationship with Design-Builder, and the responsibilities of all Design-Builder's Key Personnel involved with the Project. The Quality Manual shall also show how the various levels of QMS documentation are linked to each other.

4. The Quality Manual shall clearly define the reporting function and authority of Design-Builder's Quality Manager, who shall liaise with the Department and act as Design-Builder's single-point representative to the Department for all matters relating to quality management.

This page intentionally left blank.

ATTACHMENT 02-2
DESIGN QUALITY MANAGEMENT PLAN

This page intentionally left blank.

ATTACHMENT 02-2
DESIGN QUALITY MANAGEMENT PLAN

1. As a component of the Project Management Plan (PMP) and the Quality Management System (QMS), Design-Builder shall establish and maintain a comprehensive Design Quality Management Plan (DQMP) that describes how it will manage the design processes for the Project in accordance with the International Organization for Standardization (ISO) 9001:2008 standard, its Quality Manual, and the requirements of the Contract Documents, including Section 3 (*Design Quality Management*) of the Technical Provisions.

2. The DQMP shall contain an organizational chart for all design activities that expands on the organizational chart in the PMP and the Quality Manual, identifying personnel responsible for design management and their relationship with the Quality Manager, who is responsible for Design-Builder's overall QMS as documented in Design-Builder's Quality Manual. It shall also contain a description of the responsibilities, qualifications, and authority of the above personnel and the organizational interfaces between those responsible for design management and other engineering and construction management disciplines.

3. The DQMP shall, at a minimum, include or reference detailed procedures and detailed process flow charts for the following processes:

   a. The procedures to be used or designing and checking of the designs and the form of design review to be undertaken.

   b. The identification of the checking team.

   c. The contents and format of Design Document Submittals.

   d. A design and audit review schedule, including dates Design-Builder plans to:

      i. Conduct internal audits of the design verification process.

      ii. Submit design packages.

      iii. Undertake Design Review meetings with the Department.

   e. The process and schedule for road safety audits, including, but not limited to, performing an audit prior to opening a section of roadway to traffic.

   f. A drawing tree indicating the organization and hierarchy of Design-Builder's drawings.

   g. Suitable metrics to measure the progress of design for each discipline.

4. In addition, the DQMP shall, at minimum, include or reference detailed Quality System Procedures (QSPs) and detailed quality process flowcharts for the following processes and procedures that shall document who does the Work, and auditable evidence of compliance with the Contract Documents:

   a. Design input and output review.

   b. Design verification to ensure that design input requirements have been met.

   c. Design validation to ensure that the completed design is compliant with the Contract Documents and suitable for its intended use.

d. Design changes.

e. Quality assessment and procurement of Design-Builder-Related Entities responsible for design.

f. External quality audits of Design-Builder-Related Entities responsible for design.

g. Internal quality audits of quality assurance (QA) and quality control (QC) processes.

h. Corrective actions, preventive actions, and opportunities for improvement.

i. Control of quality records.

j. Document management.

ATTACHMENT 02-3
CONSTRUCTION QUALITY MANAGEMENT PLAN

This page intentionally left blank.

ATTACHMENT 02-3
CONSTRUCTION QUALITY MANAGEMENT PLAN

1. As a component of the Project Management Plan (PMP) and the Quality Management System (QMS), Design-Builder's Quality Manager shall establish and maintain a comprehensive Construction Quality Management Plan (CQMP) that describes how it will manage the construction activities in accordance with the International Organization for Standardization (ISO) 9001:2008 standard, its Quality Manual, and the requirements of the Contract Documents, including Section 4 (*Construction Quality Assurance, Quality Control, and Oversight*) of the Technical Provisions.

2. The CQMP shall contain an organizational chart, which expands upon the organizational chart of the Quality Manual, identifying personnel responsible for construction management and their relationship with the Quality Manager for the Design-Builder's overall QMS as documented in Design-Builder's Quality Manual. It shall also contain a description of the responsibilities, qualifications, and authority of the above personnel and the organizational interfaces between those responsible for the Work, including construction management and other disciplines such as design management, environmental, and traffic management.

3. The CQMP shall, at a minimum, include or reference detailed Quality System Procedures (QSPs) and detail process flowcharts for the following processes:

   a. Construction safety audits.

   b. The process and schedule for work zone safety audits.

   c. Inspection, testing, and monitoring.

   d. Materials identification and traceability.

   e. Quality assessment and procurement of Design-Builder-Related Entities responsible for construction.

   f. External quality audits of DB-Related Entities responsible for Construction Work.

   g. Internal quality audits.

   h. Control of Nonconforming Work.

   i. Corrective actions, preventive actions, and opportunities for improvement.

   j. Document management.

   k. Control of quality records.

   l. The above procedures and flowcharts shall document who does the Work, what they do, and what provide evidence they have done the Work correctly.

4. The CQMP shall also include and/or reference an Inspection and Testing Plan. The Inspection and Testing Plan shall, at a minimum, include:

   a. Description of the operations or stage of Work.

   b. Description of the inspection, calibration, sample, test or trail activity (at what stage the inspection or test take place), and monitoring activity.

c. Frequency, number, and time schedule of inspections, calibration, sample, test and monitoring for both QC and QA.

d. Reference to Project Standards, codes, specifications, and acceptance criteria.

e. Specified testing and inspection procedures and applicable checklists and reports.

f. Personnel or agency responsible for inspection, calibration, sample, test, trail activity, and monitoring activity.

g. QA review, all hold points and witness points.

h. When applicable, description and frequency of geotechnical instrumentation.

i. Monitoring and adherence to acceptance criteria and other records.

j. Witness and hold points, including who is the responsible party (includes Designer and the Department).

k. The steel fabricator's QC program outlining the QC tasks to be performed and identifying the individuals responsible for performing the QC tasks.

l. Concrete QC plan, revisions and weekly reports that address the production, QC testing, transport, contingency plans for equipment breakdown or inclement weather, placement, finish, and cure of Portland cement concrete for foundations, abutments, superstructures, decks, drainage structures, pavement and other pours over 100 yd^3 ($75m^3$).

m. Design support during construction review points.

ATTACHMENT 02-4
TRAFFIC QUALITY MANAGEMENT PLAN

This page intentionally left blank.

ATTACHMENT 02-4
TRAFFIC QUALITY MANAGEMENT PLAN

1. As a component of the Project Management Plan (PMP) and the Quality Management System (QMS), Design-Builder shall provide a comprehensive Traffic Quality Management Plan (TQMP) that describes how it will administer the Project's traffic management processes in accordance with the International Organization for Standardization (ISO) 9001:2008 standard, its Quality Manual, and the requirements of the Contract Documents, including Section 12 (*Maintenance of Traffic During Construction Period*) of the Technical Provisions. The TQMP is to apply throughout Design and Construction, and all traffic personnel of Design-Builder and those of Design-Builder-Related Entities shall comply with the Quality Manual, this TQMP, and the processes and procedures that are part of this TQMP.

2. The TQMP shall contain an organizational chart, which expands upon the organization chart of the Quality Manual, identifying personnel responsible for traffic management and their relationship with the Maintenance of Traffic (MOT) Manager, the Quality Manager, and for Design-Builder's overall Quality Management System (QMS) as documented in Design-Builder's Quality Manual. It shall also contain a description of the responsibilities, qualifications, and authority of the above personnel and the organizational interfaces between those responsible for traffic management and other disciplines such as design management, construction management, and environmental management. The TQMP shall address the manner in which traffic management relates to Project Design and Construction.

3. The TQMP shall, at a minimum, include or reference detailed Quality System Procedures (QSPs) and process flowcharts for the following processes:

   a. Significant processes outlined in Design-Builder's Transportation Management Plan (TMP) and associated sub-plans.

   b. External quality audits of Design-Builder-Related Entities responsible for traffic management.

   c. Internal quality audits.

   d. Management of Nonconforming Work.

   e. Corrective actions and preventive actions.

   f. Document management.

   g. Control of quality records.

4. The above procedures and flowcharts shall document who does the Work, what they do, and what evidence is generated that they have done the Work correctly. When the above processes are already covered as part of another QMP, the process heading still needs to be identified as part of the TQMP; however, the details can be minimized to a reference to the other QMP and section or paragraph where the details are provided. The referenced QMP and section or paragraph must indicate specific requirements with regard to the above processes as it relates to traffic quality management. Notwithstanding the above, processes that fall within the specific requirements of the TMP must include detailed QSPs and process flowcharts under the TQMP.

This page intentionally left blank.

ATTACHMENT 02-5
ENVIRONMENTAL QUALITY MANAGEMENT PLAN

This page intentionally left blank.

ATTACHMENT 02-5
ENVIRONMENTAL QUALITY MANAGEMENT PLAN

1. As a component of the Project Management Plan (PMP) and the Quality Management System (QMS), Design-Builder shall provide a comprehensive Environmental Quality Management Plan (EQMP) that describes how it intends to manage the environmental components of the Project in accordance with the International Organization for Standardization (ISO) 9001:2008 standard, its Quality Manual, the requirements of the Contract Documents, and Environmental Management System (EMS), and the Environmental Compliance Management Plan (ECMP). The EQMP is to apply through Final Acceptance.
2. The EQMP shall contain an organizational chart that expands upon the organizational chart of the Quality Manual, identifying personnel responsible for environmental management and their relationship with the Environmental Compliance Manager (ECM), the Quality Manager, and Project Manager for Design-Builder's overall QMS as documented in Design-Builder's Quality Manual. It shall also contain a description of the responsibilities, qualifications, and authority of the above personnel and the organizational interfaces between those responsible for environmental management and other discipline such as management of Project Design and Construction.
3. Design-Builder shall appoint an ECM meeting the qualifications as described in Section 1.6.3 (*Key Personnel*) who shall be responsible for the EQMP and who shall report to the Quality Manager.
4. The EQMP shall include or reference detailed Quality System Procedures (QSPs) and process flowcharts for the following processes:
   a. Satisfying and ensuring compliance with Design-Builder's environmental obligations, including compliance with the EMS and in particular, the preparation and implementation of an ECMP and specific plans as may be detailed elsewhere in the Contract Documents.
   b. Obtaining and maintaining applicable permits, licenses, and approvals.
   c. Environmental monitoring and reporting.
   d. Environmental incident reporting and tracking.
   e. External quality audits of Design-Builder-Related Entities responsible for environmental aspects of the Project.
   f. Internal quality audits.
   g. Control of Nonconforming Work.
   h. Corrective actions, preventive actions, and opportunities for improvement.
   i. Document management.
   j. Control and retention of quality records.

The above procedures and flowcharts shall document who does the Work, what they do, and what evidence is generated that they have done the Work correctly.

1. The Department, in the course of its review, shall pay special attention to Design-Builder's EQMP to verify that Design-Builder has taken full responsibility for all of the environmental requirements as specified for the Project.

This page intentionally left blank.

ATTACHMENT 05-1
LANDSCAPE AND AESTHETICS REQUIREMENTS

This page intentionally left blank.

PROJECT NEON DB 1-4 LANDSCAPE AND AESTHETICS REQUIREMENTS

NEVADA DOT

TABLE OF CONTENTS

Table of Contents i

Use of Landscape and Aesthetics Requirements iii

Introduction to Meadows Redux v

1.0 Bridge Aesthetics 1-1

2.0 Wall Aesthetics 2-1

3.0 Groundplane Treatments 3-1

4.0 Vegetation 4-1

5.0 Sculptural/Artistic Features 5-1

6.0 Color Palette 6-1

7.0 Local Agency Project Infrastructure 7-1

USE OF LANDSCAPE & AESTHETICS REQUIREMENTS

GENERAL

These landscape and aesthetic (L&A) requirements shall supplement the project technical specifications and shall be used by project Design-Builder to guide the aesthetic design of the Project NEON DB 1-4. These requirements set the aesthetic expectations for the project and allow for innovation in achieving project requirements. These requirements set the design parameters and prescribe design templates in the project corridor for mainlines, gateways, interchanges, and remnant parcels to specific architecture and landscape architecture components. The components represented in these requirements were selected to relate to one another through massing, colors, materials, and graphic elements to create an overall aesthetic that supports the Meadows Redux design theme.

These requirements illustrate the application of L&A elements for the thematic character chosen for the project. The L&A theme is Meadows Redux as described in the Project NEON Landscape and Aesthetics Requirements Report by NDOT listed in the Technical Provisions Section 26 (Standards and References).

These requirements lay out the application of the theme elements. The Design-Builder shall design a compatible set of artistic impressions of the theme.

The following sections address Bridge Aesthetics, Wall Treatments, Groundplane Treatments, Vegetation, Sculptural/Artistic Features, and Color Palette.

Placement of L&A elements shall be defined by a hierarchy of treatment levels:

- **Standard**– the base elements throughout the corridor (base color and texture)
- **Accentuated**– areas where the traveling public will view an area as pleasing rather than mundane
- **Focal**– areas to draw attention or that will have focused attention
- **Landmark**– big theme L&A treatments

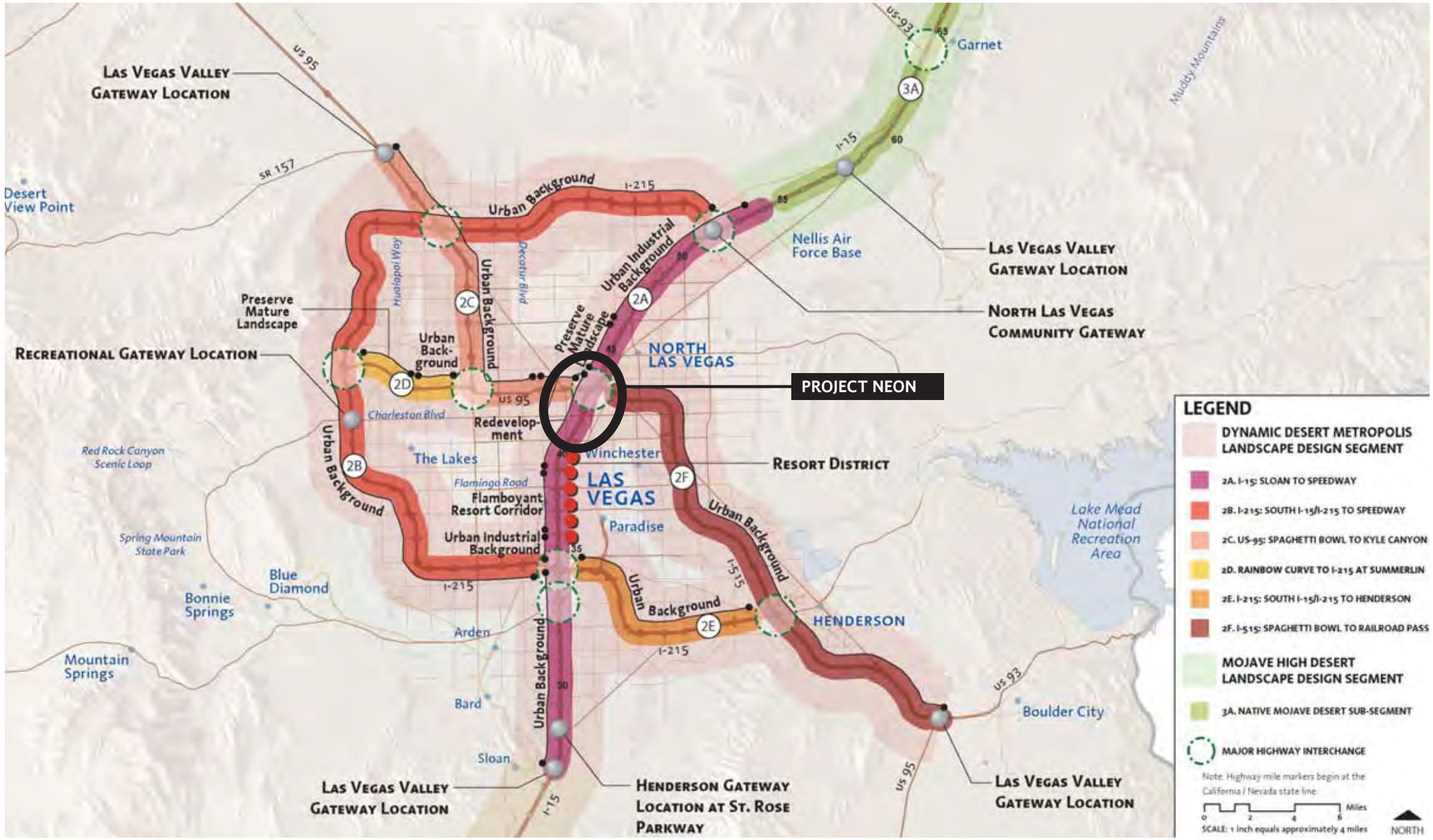

I-15 CORRIDOR PLAN

LAS VEGAS METROPOLITAN AREA

Dynamic Desert Metropolis Landscape Design Segment

INTRODUCTION TO MEADOWS REDUX

MEADOWS REDUX: A HISTORY

Beginning in May 2000, the State of Nevada through the State Transportation Board and NDOT began a planning process to create a vision for the state highway system that would satisfy the need for L&A considerations throughout the state. It was recognized that the state highways represent an opportunity to demonstrate the images, history, peoples, and climate that make Nevada a unique place.

Pattern and Palette of Place: A Landscape and Aesthetics Master Plan for the Nevada State Highway System (NDOT, 2002) established the framework for developing corridor studies. *The I-15 Landscape and Aesthetics Corridor Plan* (NDOT, 2005) describes a comprehensive vision for L&A within the corridor from Primm on the California border to Mesquite on the Utah border, a stretch that includes the project. The project falls within the Dynamic Desert Metropolis area identified in the corridor plan.

In 2006, the *Project NEON Aesthetics and Landscape Requirements Report* was completed. The report provides the State's past planning efforts, presents the development of conceptual themes, and details design options for structural and landscape aesthetics for the project. Three project themes were developed and presented at a public open house at which the public provided input into the theme selection.

The selected theme, Meadows Redux, seeks to bring back to the center of Las Vegas the meadow imagery for which the city was named. Grassland meadows characterize the aesthetic theme on structures and in the landscape. Mojave flora and fauna are overlaid on this Meadows Redux theme, supporting the diversity of images and plant material. Traveling the corridor from north to south, at the US 95 and I-15 intersection one encounters desert landscape and painted images. This theme transitions to the meadow/grassland theme provided in the *Project NEON Aesthetics and Landscape Requirements Report*. The farther south one travels in the corridor, the "wetter" the grassland imagery appears until reaching the oasis with palm plantings at the I-15 Sahara Avenue interchange.

Images of flora and fauna supporting the theme shall be expressed on structures and wall treatments. Bridge architecture shall have strong forms, and bridge rails, columns, and abutment/wing walls shall have aesthetic treatments. Fences and railings associated with the structures shall echo the Meadows Redux patterns. At key focal points, sculptural and lighting accents shall highlight gateways into city streets.

"A vision for the State Highway System: We envision a system of state highways that reflects the land and people of Nevada. We believe that Nevada should have highways that are aesthetically pleasing, as well as safe and cost effective. Therefore, no state highway is complete until landscape and aesthetics are considered and addressed."

-NDOT, Pattern and Palette of Place: A Landscape and Aesthetics Master Plan for the Nevada State Highway System

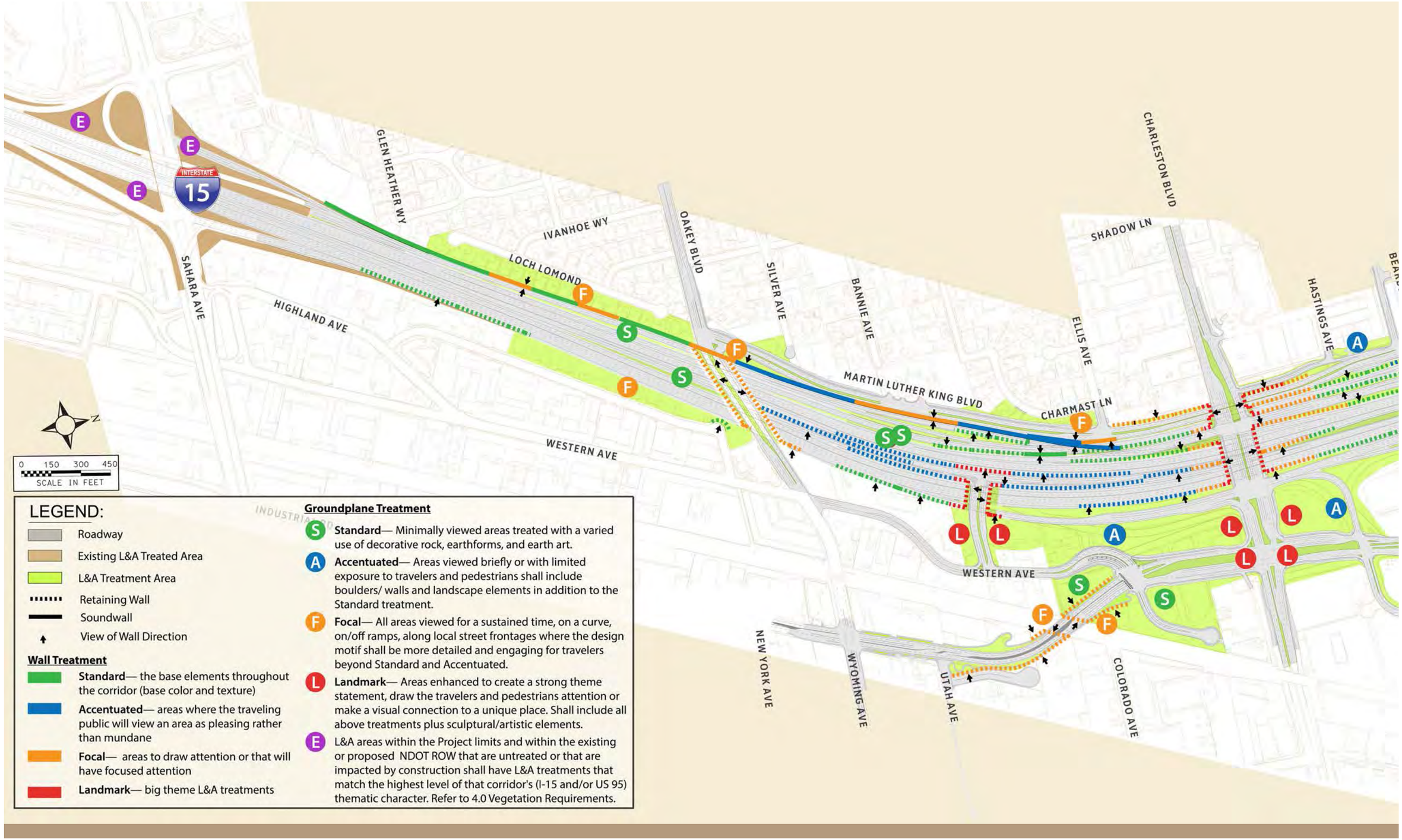
INTERSTATE 15
SAHARA AVE
HIGHLAND AVE
GLEN HEATHER WY
IVANHOE WY
LOCH LOMOND
OAKEY BLVD
SILVER AVE
BANNIE AVE
MARTIN LUTHER KING BLVD
CHARMAST LN
ELLIS AVE
SHADOW LN
CHARLESTON BLVD
HASTINGS AVE
WESTERN AVE
NEW YORK AVE
WYOMING AVE
UTAH AVE
COLORADO AVE
0 150 300 450
SCALE IN FEET
LEGEND:
Roadway
Existing L&A Treated Area
L&A Treatment Area
Retaining Wall
Soundwall
View of Wall Direction
Wall Treatment
Standard— the base elements throughout the corridor (base color and texture)
Accentuated— areas where the traveling public will view an area as pleasing rather than mundane
Focal— areas to draw attention or that will have focused attention
Landmark— big theme L&A treatments
Groundplane Treatment
Standard— Minimally viewed areas treated with a varied use of decorative rock, earthforms, and earth art.
Accentuated— Areas viewed briefly or with limited exposure to travelers and pedestrians shall include boulders/ walls and landscape elements in addition to the Standard treatment.
Focal— All areas viewed for a sustained time, on a curve, on/off ramps, along local street frontages where the design motif shall be more detailed and engaging for travelers beyond Standard and Accentuated.
Landmark— Areas enhanced to create a strong theme statement, draw the travelers and pedestrians attention or make a visual connection to a unique place. Shall include all above treatments plus sculptural/artistic elements.
L&A areas within the Project limits and within the existing or proposed NDOT ROW that are untreated or that are impacted by construction shall have L&A treatments that match the highest level of that corridor's (I-15 and/or US 95) thematic character. Refer to 4.0 Vegetation Requirements.

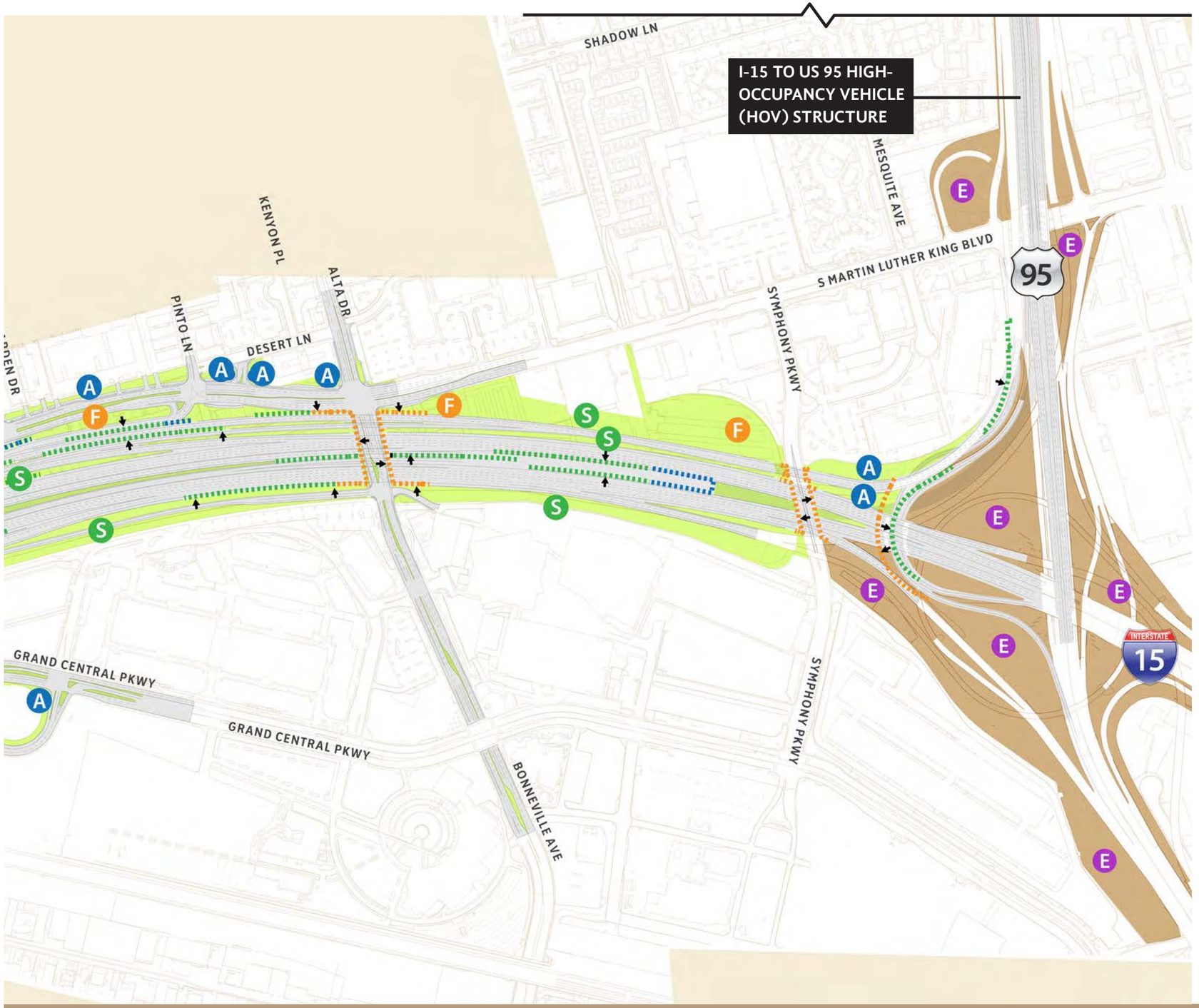
I-15 TO US 95 HIGH-OCCUPANCY VEHICLE (HOV) STRUCTURE
SHADOW LN
MESQUITE AVE
S MARTIN LUTHER KING BLVD
95
KENYON PL
ALTA DR
PINTO LN
DESERT LN
SYMPHONY PKWY
GRAND CENTRAL PKWY
GRAND CENTRAL PKWY
BONNEVILLE AVE
SYMPHONY PKWY
INTERSTATE
15

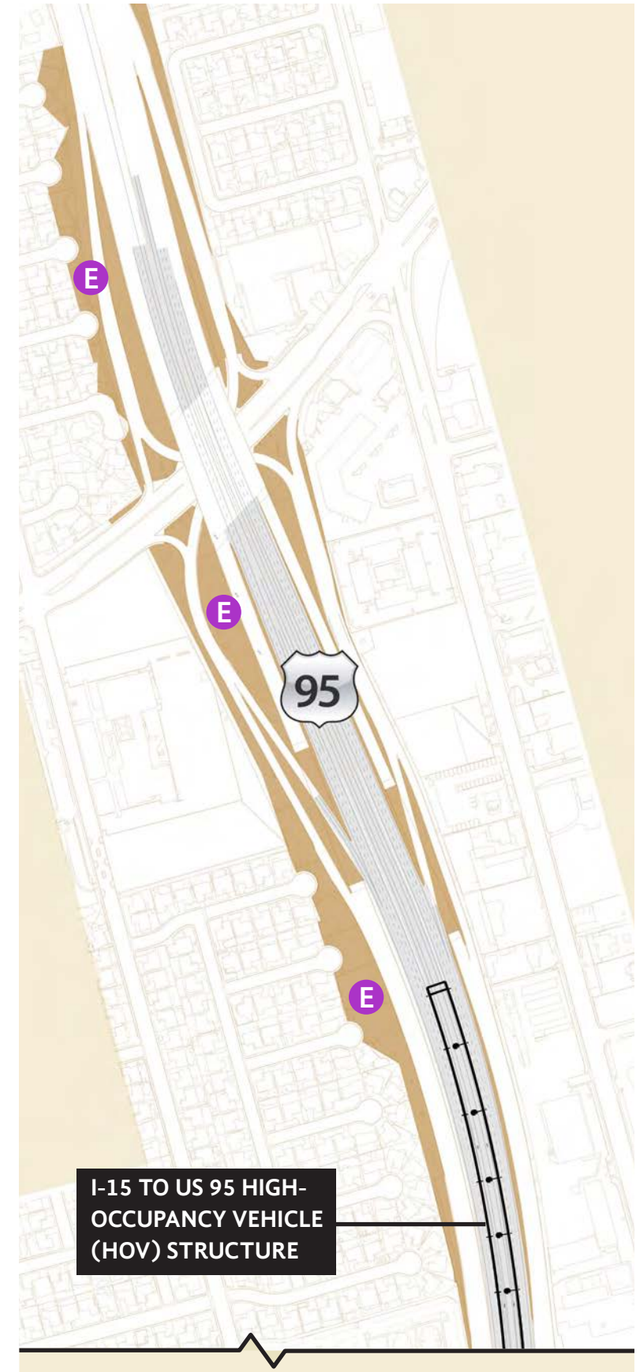
95
I-15 TO US 95 HIGH-OCCUPANCY VEHICLE (HOV) STRUCTURE

1.0 BRIDGE AESTHETICS

1.0 BRIDGE AESTHETICS

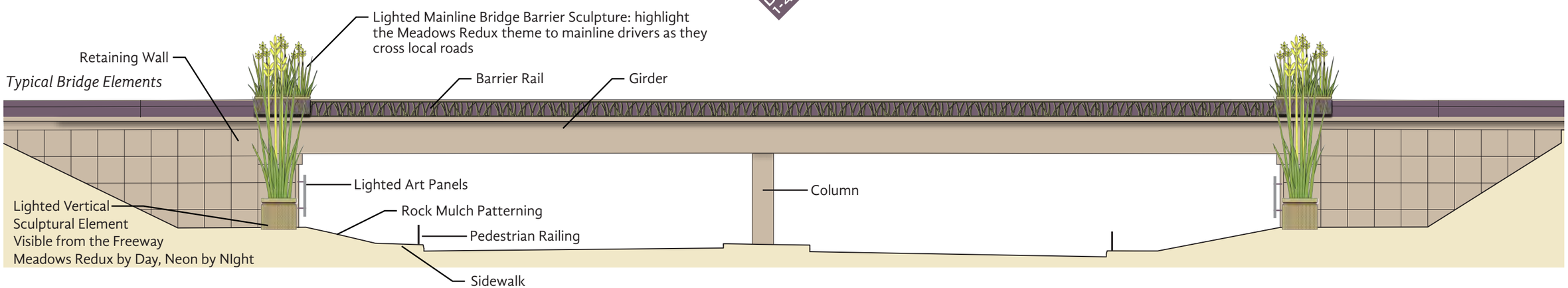

Bridge Map

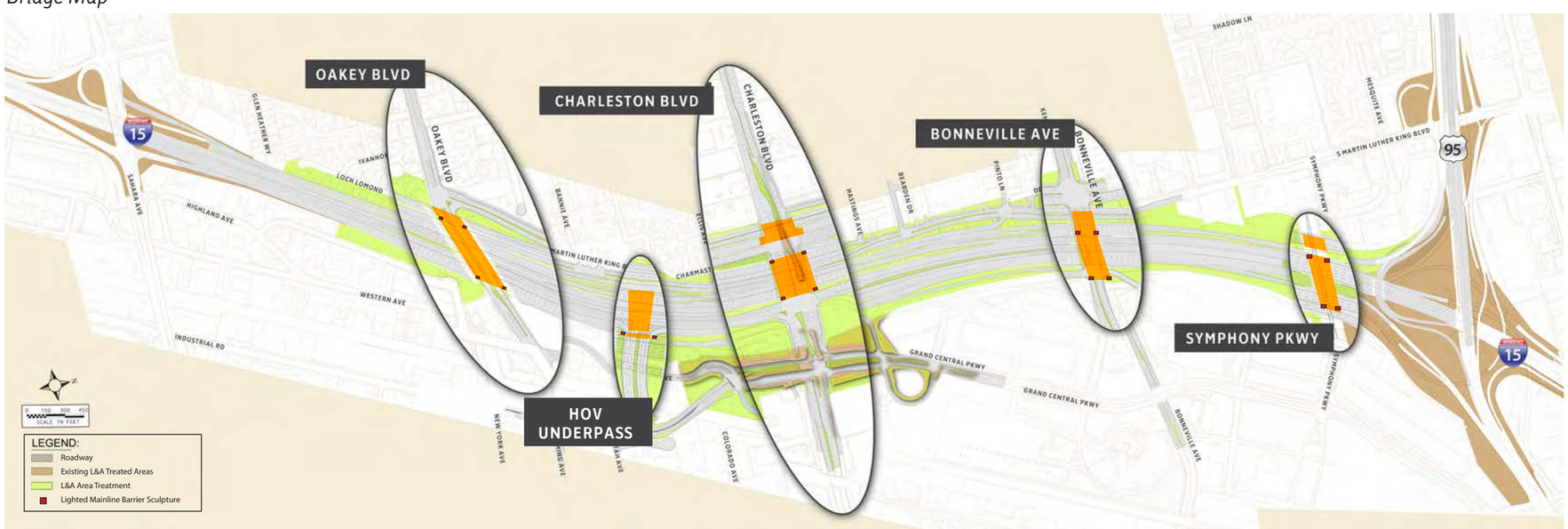

VISION

Good bridge engineering and aesthetics should be synonymous. Beauty is not simply a matter of taste alone. When qualities such as proportion, order, and symmetry are applied well, people typically often agree the object has aesthetic value; when applied poorly, they generally agree it does not. Aesthetics should be an integral part of design and must be considered both in the general form and in the details that support it. The parts must be considered as contributing to the whole.

DESIGN INTEGRITY

A well-designed bridge is the product of design decisions that are in alignment with one another, with one result being that the design has integrity. Myriad options are available to design, express, and highlight structural form.

Scale: Scale refers to the size relationships among features of the bridge structure and between the bridge structure and its surroundings. Because most design relates to things that will be used by people, a connection exists between the human body and designed objects. Structures that respond to the size of the human form are often referred to as having human scale. Highways have a larger scale because they are built for vehicles moving at high speeds. Highway elements such as piers or girders can be very large but appear "in scale" with the highway environment. Conflicts in scale become apparent when pedestrian accommodations are integrated into the highway environment. Ways must then be found to humanize the scale of the pedestrian portion of the bridge structure so that the structure operates at both scales.

Proportion: Proportion creates a sense of order by assigning appropriate relative sizes to different elements. The goal of good design is to achieve appropriate proportions among the parts of a structure: between its height, width, and depth; between solids and voids; between surfaces and openings; and between areas of sunlight and shadow. Proportion can suggest the order of significance of the elements or the roles played by the elements in the structure. Surface textures and colors also contribute to the sense of proportion.

- Meadows Redux formliner motif along bridge barrier with two accent colors shall extend along the entire length of bridge structures and the approach slab.
- Meadows Redux formliner motif along bridge barrier rail with two accent colors shall be used for 30 feet on either side of bridge columns on the I-15/US 95 HOV Connector.

Harmony, Contrast, and Rhythm: Harmony results when design elements have visual similarity and a complementary relationship. If planes or lines in a design have more dissimilar characteristics than similar characteristics, they are generally not perceived as being harmonious. Contrast relieves the monotony of simple harmony by juxtaposing the characteristics of some design elements with their opposites. Contrast often takes the form of dramatic differences in color or light and shadow. A dominant theme is essential in organizing the design into a pleasing aesthetic experience. Rhythm creates a sense of order by repeating similar elements in, on, or around a structure. These elements create a pleasing natural flow. On bridges, rhythms may be created by the spacing of light poles, spacing posts within a railing, and applying surface texture and color.

Color: Color can be applied to define, clarify, modify, accentuate, or subdue the visual effects of structural elements. Warm colors tend to emphasize the presence and size of forms, whereas cool colors diminish the visual importance of the elements to which they are applied. Colors are perceived differently throughout the day and during various seasons because of the position of the sun and atmospheric conditions. Colors are also influenced by the background against which they are seen, and their appropriateness is often judged in terms of their fit with their background. Background is particularly important for highway color selections because the highway element is generally a very small part of a much larger scene.

Texture: Texture helps define form through subtle surface variations and shadings. Texture can be used to soften or reduce imposing scale, add visual interest, and introduce human scale to large objects such as piers, abutments, monuments, and retaining walls. Distance and motion alter the perception of texture. When viewed from a distance or at high speeds, fine textures blend into a single tone and appear flat. The greater the distance, the higher the observer's speed, or the larger the object to which it is applied, the coarser or larger the texture must be to stand out.

DEFINED HIERARCHY OF TREATMENT LEVELS

Standard
Base color and texture, accent colors

Accentuated
Repeating pattern of Meadows Redux motif, accent colors or appliqués

Focal
Meadows Redux motif on barrier rail on bridges and on sections of barrier rail over columns on HOV structure

Landmark
Bridge barrier rails or columns: enhanced to carry out a strong theme statement, draw the traveler's attention, or make a visual connection to the unique place and/or history

I-15 to US 95 HOV Structure

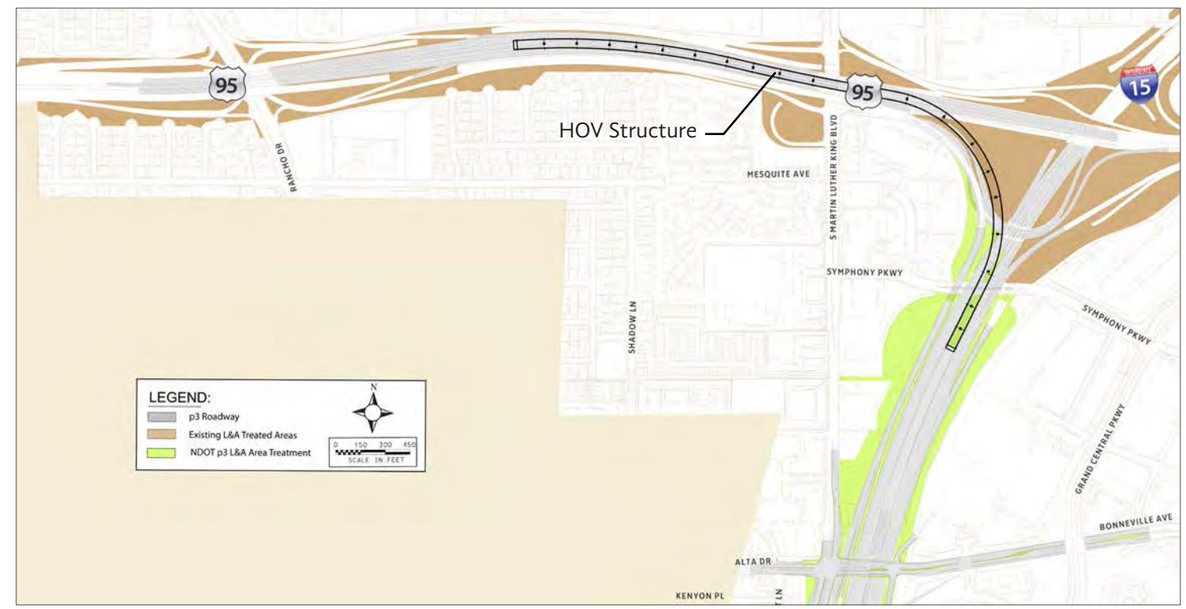

HOV Structure Elements

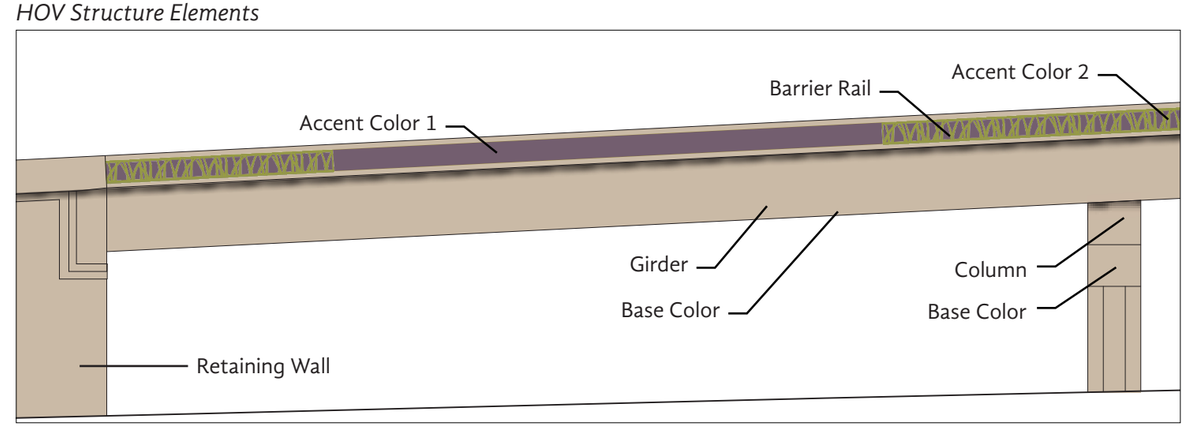

BRIDGE ELEMENTS

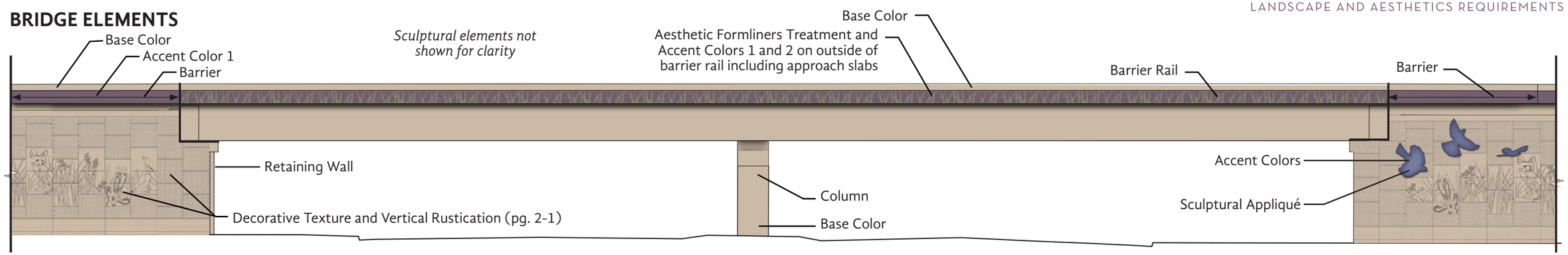

DESIGN CHARACTER

Meadows Redux Grasses and Flowers:
Mojave Fauna
Mojave Flora
Hierarchy Landmark Treatment:
HOV/NEON Gateway
Charleston Boulevard
Focal Treatment:
Bonneville Avenue/Alta Drive

COLOR PALETTE (see Section 6.0)

Base Color:
DE 6130 Wooded Acre
Accent Colors:
DE 5978 Plum Wine
DE 5537 Woodland Walk
DE 5914 Bossa Nova Blue

PEDESTRIAN RAILINGS

Pedestrian railings shall be used for pedestrian safety and directional control.

SIDEWALKS

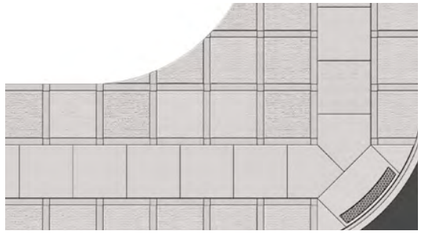

Sidewalks shall be standard finish and accessible, 6 feet to 8 feet wide or greater. The remaining sidewalk area shall be scored or textured under the bridges and at intersections.

MEDIAN & MEDIAN BARRIERS

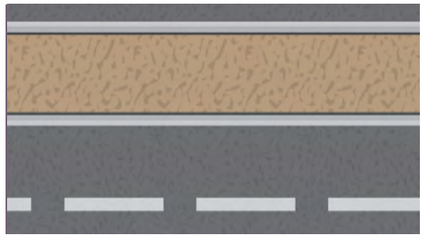

Medians under bridge structures shall be stamped concrete or pavers that are base color and textured.

EXISTING SLOPE PAVE

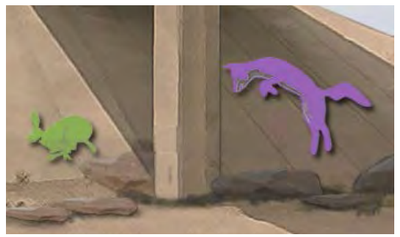

Slope pave shall be base color with accent color patterning and sculptural appliqués.

UNDERPASS ART PANELS

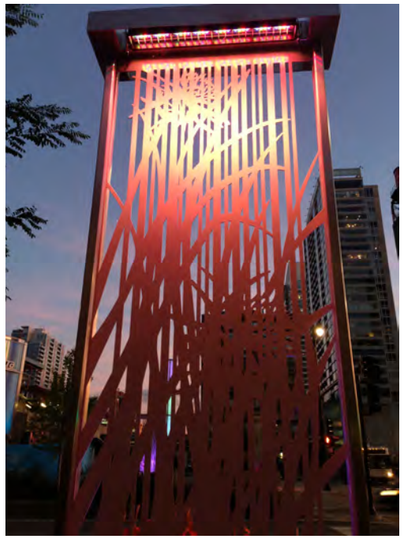

A series of lighted art panels under bridge overpasses shall enhance pedestrian safety and experience.

SCULPTURAL APPLIQUÉS

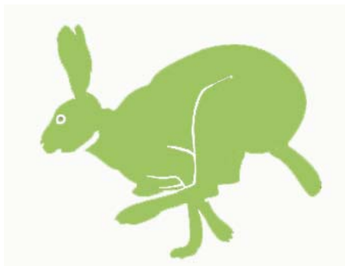

Sculptural appliqués promoting the Meadows Redux theme and accent colors shall be applied to walls to provide scale, proportion, contrast, and interest.

- All highway structure elements shall be painted with the base color.
- Accent colors shall be used in a composition to visually reinforce structural elements on bridges.
- Accent colors shall be used to highlight structural aspects in high-visibility areas.
- Abutment walls with properly scaled aesthetic images, formliners and vertical rustication shall provide a strong visual anchor for the bridge.
- A consistent horizontal span across the bridge length shall be provided on either side of bridge column set back from the edge to provide a strong shadow line to the bridge girder.
- Center columns shall be well-proportioned to the overall bridge.
- Lighted mainline bridge barrier sculptures shall be placed on the outside mainline bridge rail, where the mainline crossing consists of multiple bridges.
- Pedestrian rails, as shown on the civil drawings, control pedestrian crossings along amenity zones and sidewalks, under bridges, and along medians.

- Bridge abutment wing walls shall be exposed the full height of retaining wall for a 25' length before sloping up to meet grade to allow for expression of the corridor theme on walls.
- Aesthetic treatment of the bridge barrier rail shall appear integrated into the approach barrier.
- Bridge barrier rail treatment shall include a minimum of two accent colors.
- Apply appliqué elements and wraps on three columns in accented/focal areas (see map on page vii).

BARRIER RAILS AND GIRDERS

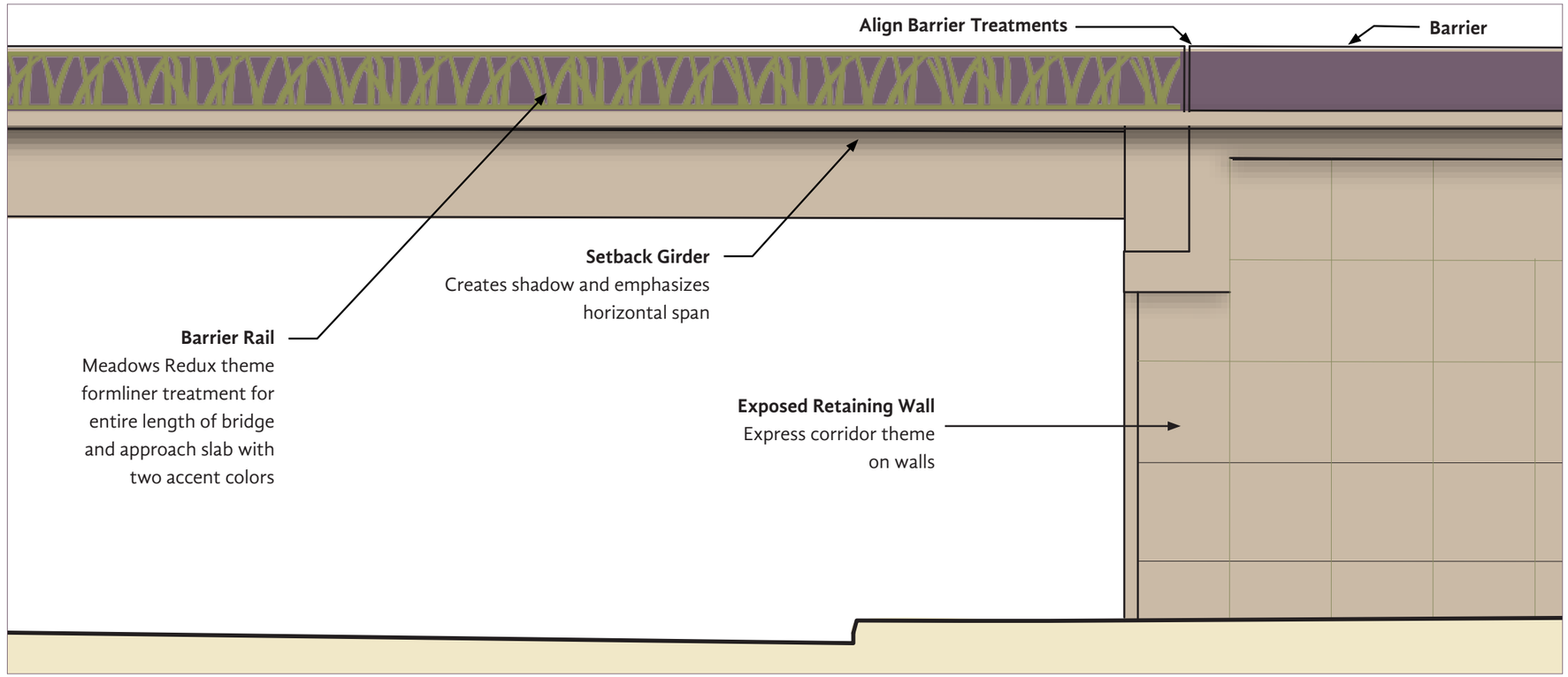

Barrier Rail and Girder at Abutment

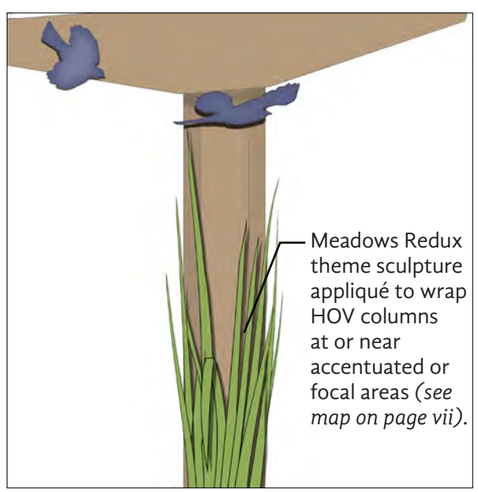

Appliqué Treatments

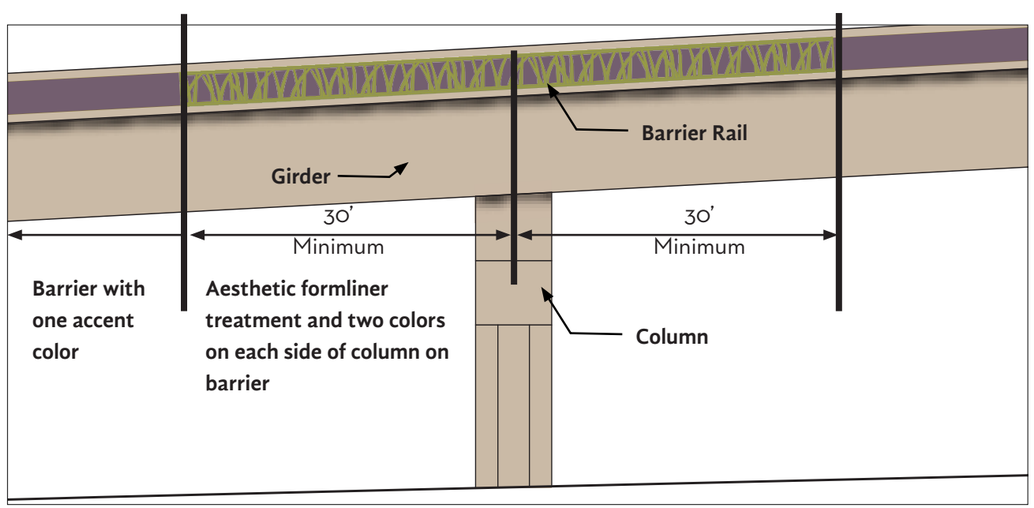

Barrier Rail on HOV Structure

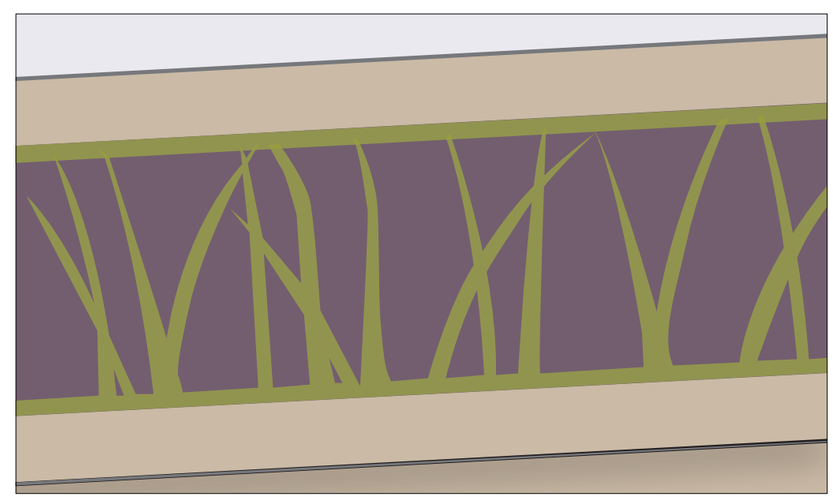

Aesthetic Treatment for Barrier Rail

2.0 WALL AESTHETICS

2.0 WALL AESTHETICS

INTRODUCTION

This section addresses the treatment of retaining walls, soundwalls, and bridge/structure abutment walls.

All walls shall be integral with their caps and associated traffic barriers and/or retaining walls in the application of a unified base color (Section 6.0) and texture (rustication).

DEFINED HIERARCHY OF TREATMENT LEVELS

Standard
Base color and texture

Accentuated
Repeating pattern of mural inserts, accent colors, or appliqués

Focal
All areas viewed for a sustained time, on a curve, on/off ramps, or a stop light condition where the decorative wall motif shall be more detailed

Landmark
Wall areas enhanced to carry out a strong theme statement, draw the traveler's attention, or make a visual connection to the unique place and/or history

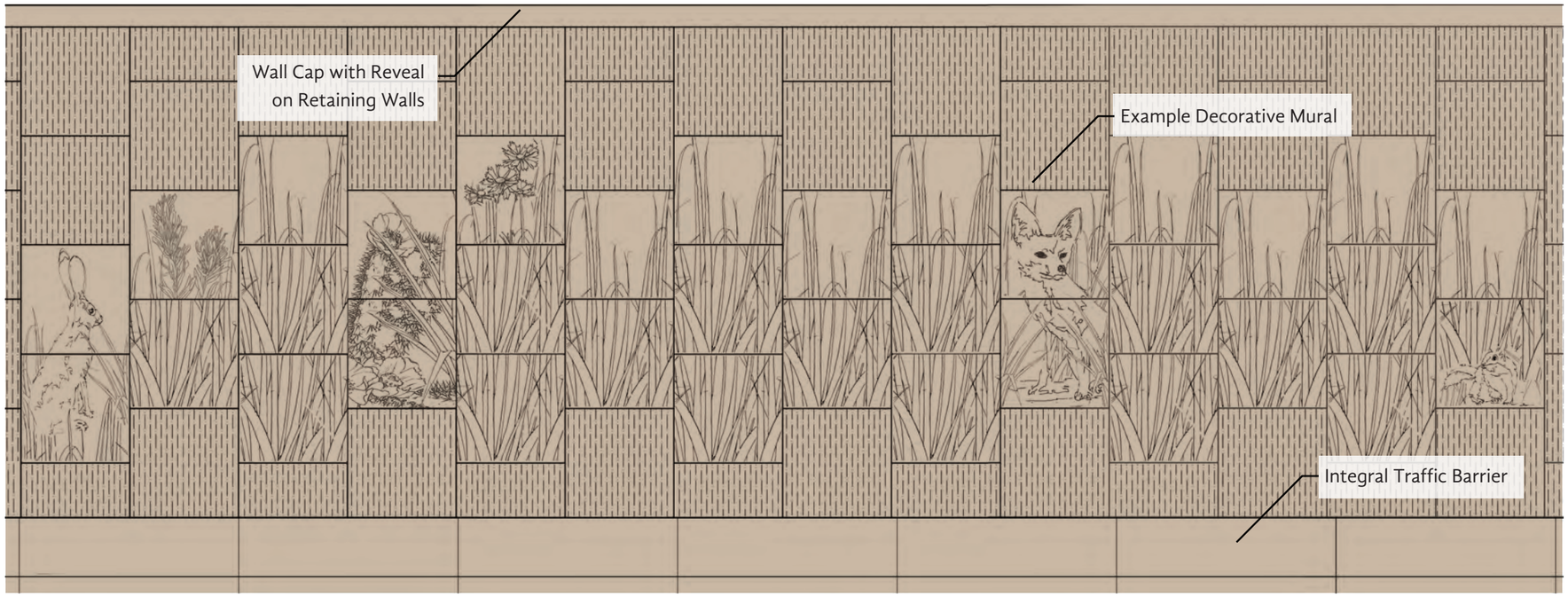

- Surrounding land shall be graded with slopes, terraces, and low walls to minimize wall height and turn ends into slopes.
- Planting shall be provided in front of walls where space permits to soften appearance of wall.
- Walls which require steps in the top level shall have steps with no height greater than 2 feet.
- No post and panel walls or segmental block walls shall be allowed. All terraces shall be planted.
- All retaining walls shall be treated with vertical rustication as a base treatment.
- All retaining walls shall be treated with interspersed aesthetic panels (formliners) depicting the NEON Meadows Redux theme.
- Use one detailed set to three less detailed panels of equal size.
- See the Sculptured Artistic Features section of this attachment for use of structural/artistic features.

- All soundwalls shall be treated with vertical rustication as a base treatment on both sides.
- All soundwalls shall be treated with interspersed aesthetic panels (formliners) depicting the Project NEON Meadows Redux theme.
- A varied pattern of number of panels is preferred.
- One detailed mural panel to three less detailed panels of equal size shall be used.
- A ratio of one third vertical rustication to two thirds mural patterns shall be used.
- Placement of aesthetic patterns and appliqués on walls shall be appropriate in scale to the hierarchy of treatment levels.
- All soundwalls shall receive equal aesthetic treatment on both sides.
- Soundwalls shall have interior columns and single outside seams. Post and panel walls shall not be allowed.
- Each soundwall mural panel shall work independently and in combination with others and special attention paid to avoid horizontal line reveal or texture distortions.

RETAINING WALLS

Retaining wall treatments shall include a multi-panel Meadows Redux theme mural that can be used in multiple combinations depending on the wall type, height, and width.

A Meadows Redux motif of grasses, wildflowers, desert cacti, and native wildlife of appropriate size and scale to the location shall be developed into retaining panels or retaining wall formliners and used in areas of lower speeds or to highlight bridges or intersections.

SOUNDWALLS

Pattern shall be used on both sides of soundwalls. A series of Meadows Redux landscape murals shall be developed at an appropriate size and scale for highway speeds. A minimum of three textures, including vertical rustication, shall be used.

The incorporation of appliqués on the soundwalls is encouraged to break up patterns.

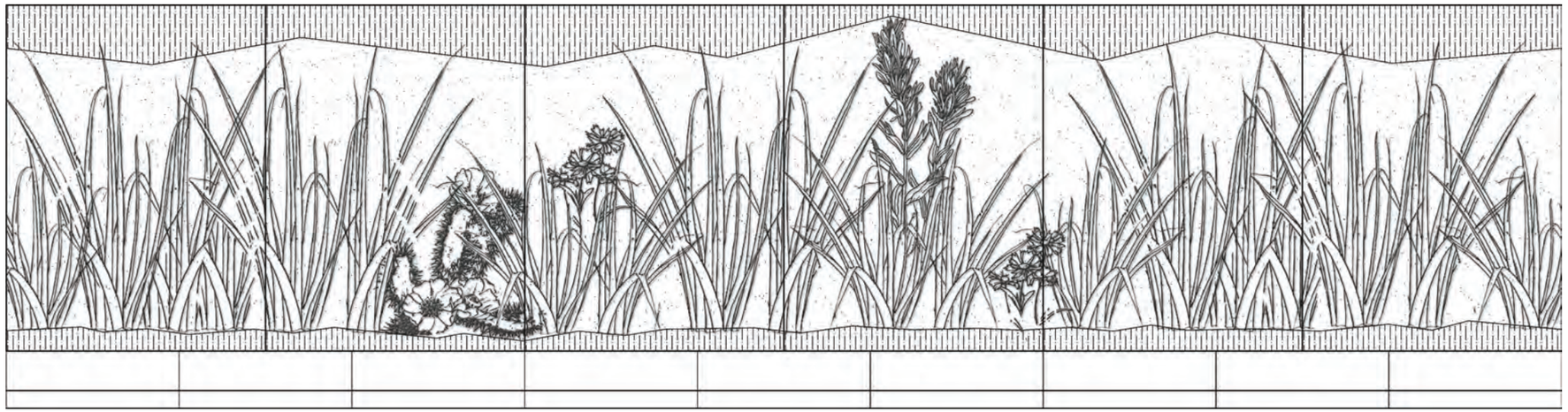

Mural Concept *A six-panel Meadows Redux mural concept with vertical rustication top and bottom. Depth and scale of reveals shall be appropriate for highway speeds.*

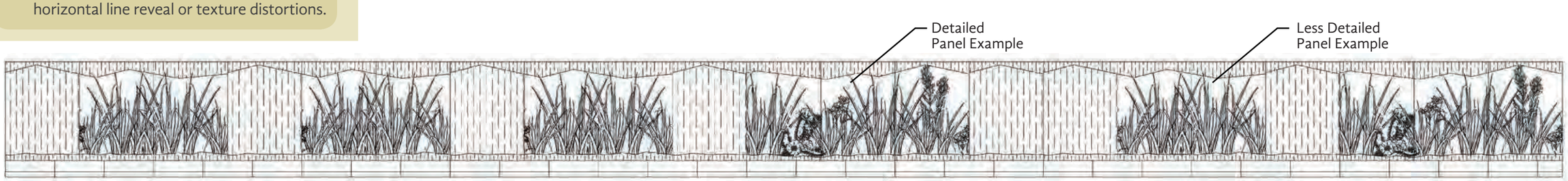

A 250-Foot Sample Wall Segment Series *This 250' sample soundwall series uses two-thirds mural panels to one-third vertical rustication panels. Ground plane and skyline align at each panel minimizing horizontal and texture distortions as the panels change.*

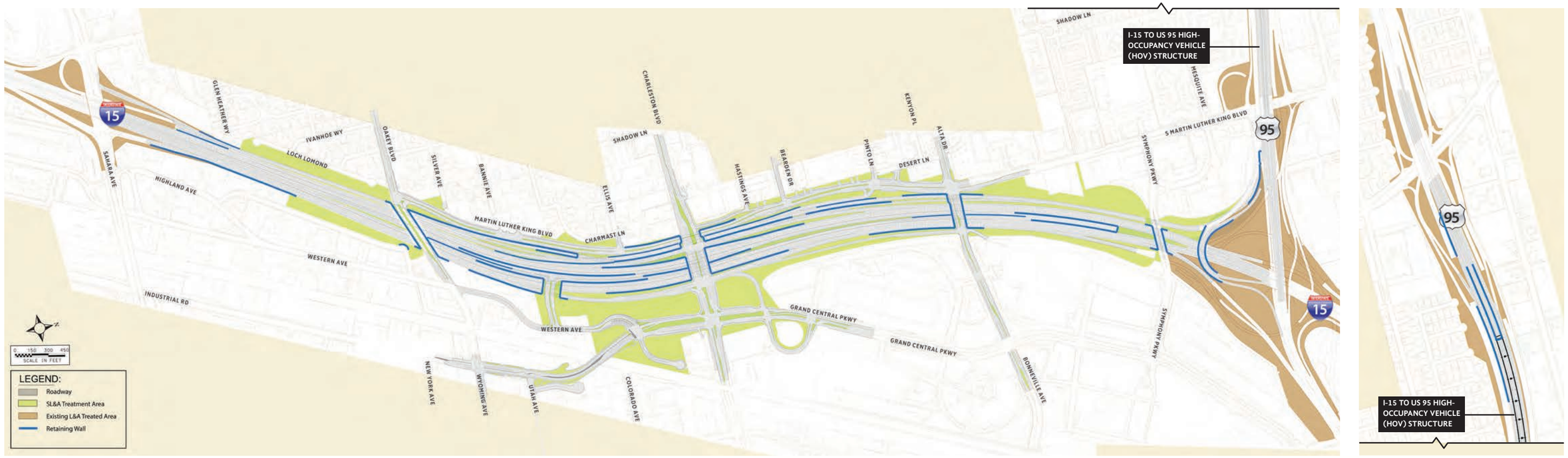

Retaining Wall Map

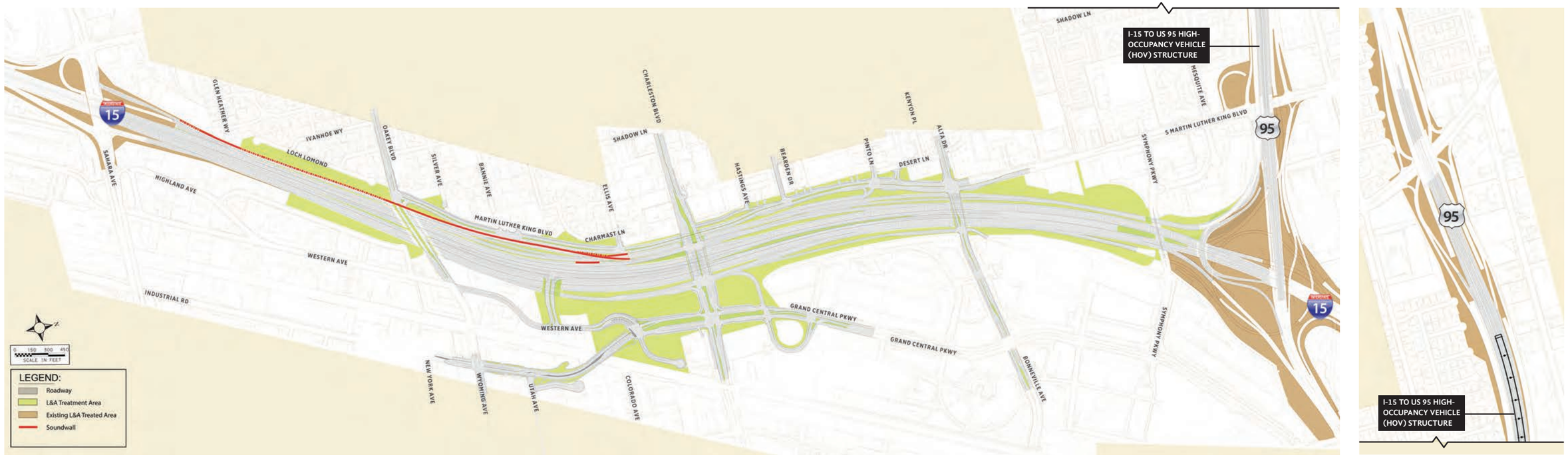

Soundwall Map

3.0 GROUNDPLANE TREATMENTS

3.0 GROUNDPLANE TREATMENTS

GROUNDPLANE CONCEPTS

Groundplane treatments along the roadway provide erosion protection, dust and weed control. and an aesthetically diverse visual environment. This treatment includes uniform depth applications of rock mulch, variable sizes and colors of stone, boulders, or glass mulch combined to create textures and patterns that mimic the existing environment and/ or the thematic character of the corridor.

The use of varying rock sizes and textures shall break up the monotony of a continuous plane of mulch for a more natural and aesthetically pleasing visual environment. Varying rock sizes and patterns creates shadow lines and reduces the potential for eye fatigue and related safety issues.

Use of rock mulch colors adds special visual interest, depth of visual scene, and an opportunity to reinforce the corridor theme.

Use of groundplane type, size, color, and patterning design shall be defined by the following hierarchy of treatment levels as viewed from I-15 or the local roadways:

· **Standard**– Minimally viewed areas treated with a varied use of decorative rock, earthforms, and earth art

· **Accentuated**– Areas viewed briefly or with limited exposure to travelers and pedestrians shall include boulders/ walls and landscape elements in addition to the Standard treatment.

· **Focal**– All areas viewed for a sustained time, on a curve, on/off ramps, along local street frontages where the design motif shall be more detailed and engaging for travelers beyond Standard and Accentuated

· **Landmark**– Areas enhanced to create a strong theme statement, draw the travelers and pedestrians attention or make a visual connection to a unique place. Shall include all above treatments plus sculptural/artistic elements.

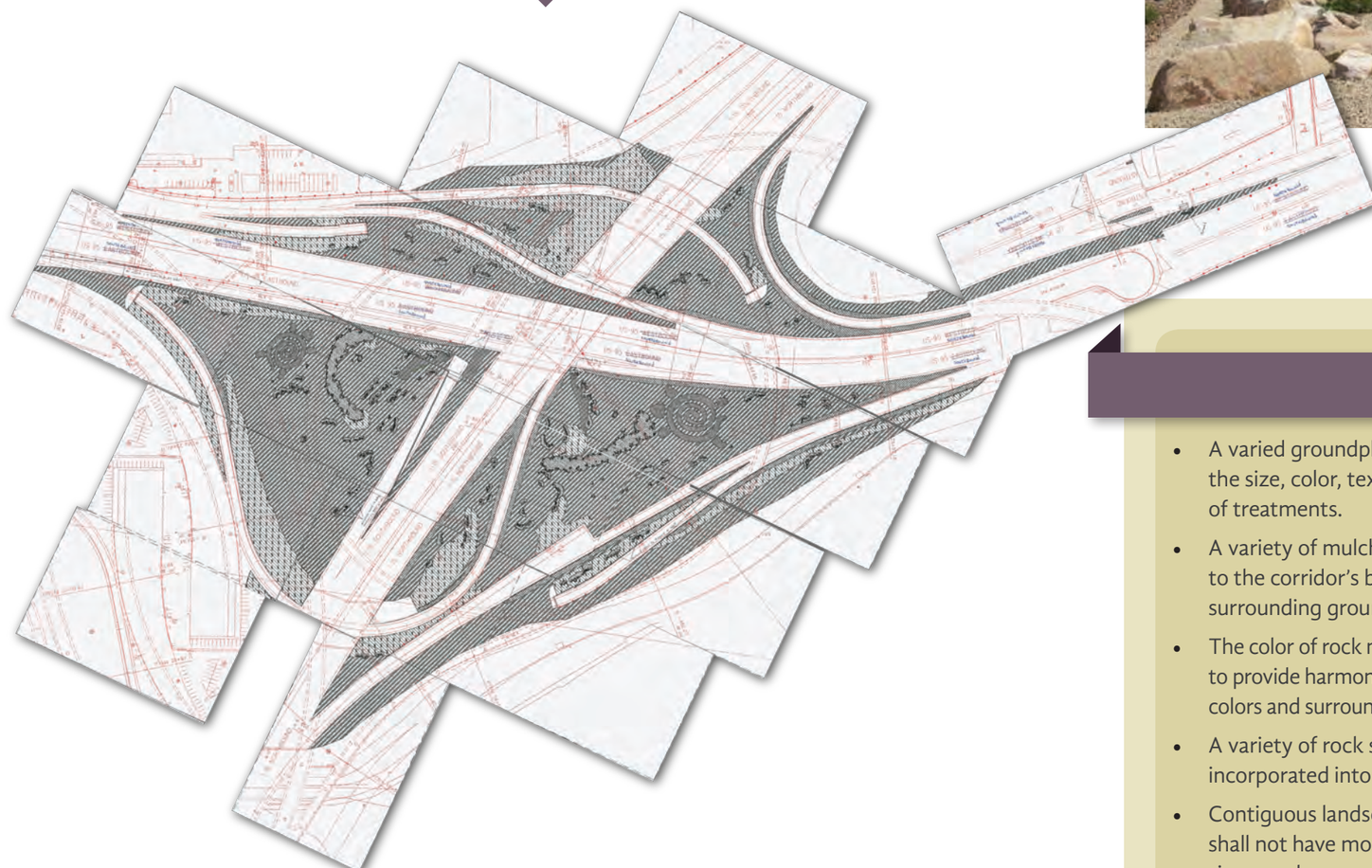

- A varied groundplane shall be created by the size, color, texture, and configuration of treatments.
- A variety of mulch colors that correspond to the corridor's base color and the natural surrounding groundplane shall be used.
- The color of rock mulch shall be coordinated to provide harmony with the corridor theme colors and surrounding environment.
- A variety of rock sizes shall be incorporated into the design.
- Contiguous landscape and aesthetics areas shall not have more than 30% of one rock size or color.
- All exposed ground shall be treated to include as a minimum with earthforms, decorative rock, and earth art.

- Patterns, sizes, and textures of rock mulch shall be used in combination with plant material (see the Vegetation section of this attachment).
- Slope paving shall be used only when other demonstrable, viable alternative treatments are not available.
- Smooth transitions shall be designed with rounding tops and toes of slopes.
- Large spaces of one or more acres shall have aesthetic landforms that vary the topography.
- Use of larger rock size shall meet clear zone safety requirements while providing aesthetic relief.
- Channel alignments shall create naturalized patterns while keeping engineering and hydraulic considerations in focus.
- Pockets of varied size boulders along the edges of the drainage channels shall be used to soften the appearance and visually connect the channel to the landscape context.

GROUNDPLANE CONCEPTS

The design for groundplane aesthetics shall use familiar desert meadow shapes and concepts. Although not always apparent, the concepts help organize materials and guard against random placement. The chosen concept shall focus on achieving the desired outcome whether disguising linear drainages, or screening or creating patterning on uniform fill slopes. Design rock mulch patterns with a curvilinear alignment that flows over and through linear drainage channels, and up slope and shall be used to provide a natural appearance.

Rounding of tops and toes of slopes in channels and painting of concrete-lined channels shall be used to add to the integration of drainage into the landscape.

Large remnant parcels that flank I-15 near Loch Lomond Way and South Highland Avenue are shown below. As illustrated, the area has large Mojave rattlesnake patterning of a second rock mulch type. Landscape boulders, water-wise trees, and desert shrubs are placed infrequently along the edges.

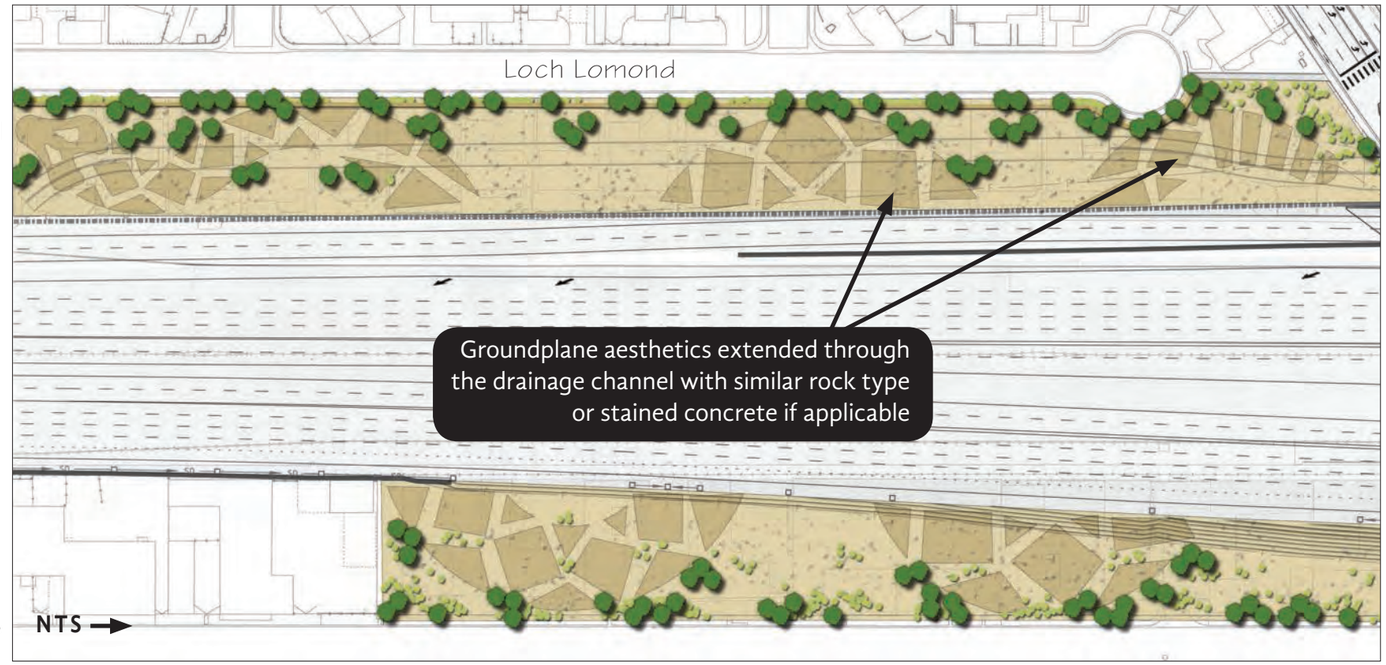

The HOV Gateway from I-15 to Western Avenue is envisioned as a landmark treatment area that includes a formal groundplane treatment. Appropriate height and scale earthen berms, spaced for the travel speed, would be covered with a grid pattern of grasses and contrasting rock mulch. Six Meadows Redux sculptures (see Sculptural/ Artistic Features of this document) in increasing height announce the gateway access. Smaller sculptures grace the median together with trees, grasses, and a formal pattern of rock mulch. Glass mulch shall be designed to catch the light from sculptures and street lights. See cover sheet for rendering.

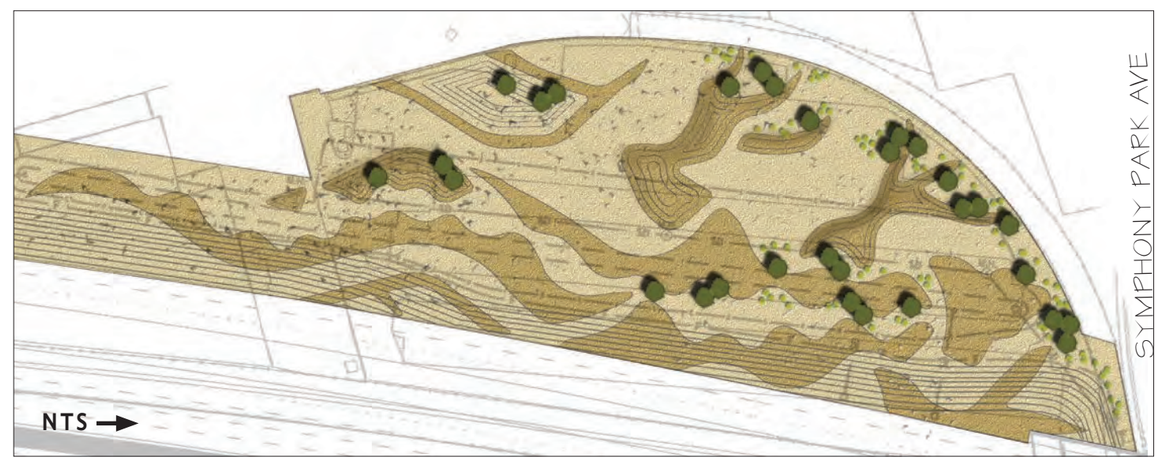

Remnant parcel treatment at I-15 and Symphony Park Avenue. Curvilinear shapes and earthen berms shall be used and second mulch soften long linear fill slopes and drainage channels. Landscape boulders, water-wise trees, and desert shrubs screen the remnant edges and dot the berms and drainage channels. Rock mulch groundplane patterning shall transition seamlessly up slopes.

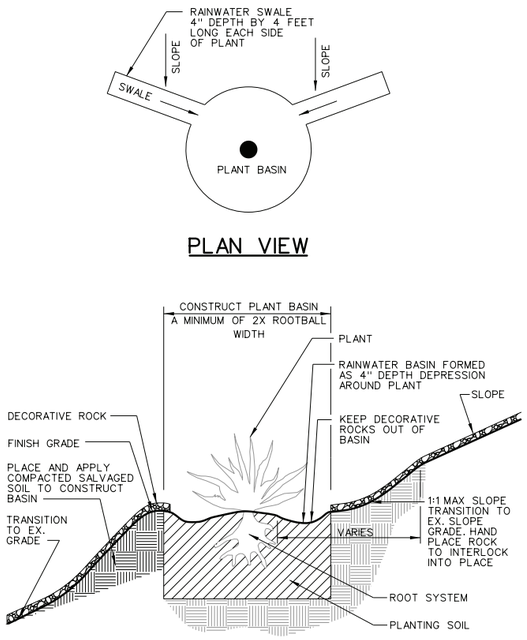

1 TYPICAL RAINWATER HARVESTING DETAIL
NTS

Planting Pit *Prior to plant installation, a planting pit shall be dug 6 inches deeper than the root extension. The planting pit shall be filled with water and allowed to drain. If the planting pit does not drain within 8 hours, then the pit shall have a 6-inch by 24-inch-deep chimney hole dug and filled with pea gravel to improve drainage. For all plants on slopes, dig two shallow depressions (4 inches deep, 12 feet wide by 4 feet or greater long) on uphill side of pits to direct rainwater to plant pit for capturing rainfall from slope. Fill depression with decorative rock (no fines) matching color and size to adjacent decorative rock.*

Rainwater Harvesting *Rainwater harvesting on slopes increases stormwater collection for infiltration and reduces runoff volume.*

Positive Drainage *Using positive drainage from slopes, plants can capture stormwater for required moisture.*

RAINWATER HARVESTING

Rainwater harvesting slows water flow during peak rainfall, and may lessen the burden placed on stormwater drainage systems. The goal of rainwater harvesting is to use natural drainage corridors and thoughtful grading to disperse drainage paths over a broad area, decreasing runoff volume and slowing water flow to create greater contact with soils and promote natural infiltration and plant health. This natural infiltration from paved surfaces also may reduce pollutant transport. Rainwater harvesting increases water collection within the landscape to use in place of or to supplement irrigation.

Small retention facilities shall be used to facilitate rainwater harvesting for landscape and aesthetics. For drainage design purposes, any retention provided shall not be considered for storm retention.

LANDFORMS

Earthen forms, along with various rocks, boulders, decorative mulches, sculpture, and art, complete the decorative groundplane at intersections and other points of interest.

- Water harvesting shall be employed as a passive system of drawing natural rainfall to all plantings.
- Landforms shall be designed for large remnant parcels, 1 acre or greater, to provide a background for perimeter planting and aesthetic interest to the traveling public.

- Freestanding walls, landscape planting, and rock mulch designs shall be integrated with vehicle recovery zone setbacks in non-parallel, pleasing curvilinear or geometric designs.
- Freestanding walls shall not exceed 14 feet in height without a step in the wall plane; individual step heights shall not exceed 2 feet.
- All freestanding wall foundations shall be covered by groundplane treatment so they are not visually exposed.

FREESTANDING METAL ART WALLS

Decorative freestanding art walls can provide vertical elements, add visual interest, and screen traffic from undesirable views.

Metal walls shall be treated with a natural-looking finish such as Desert Varnish, approved accent colors, or other approved finishes.

FREESTANDING GABION ROCK ART WALLS

Curvilinear freestanding gabion art walls add interest to large remnant parcels and highlight changes in groundplane materials.

DRY STACK ROCK WALLS

Curvilinear freestanding rock walls shall be designed as dry stack to add interest to large remnant parcels and highlight changes in groundplane materials.

GRADE CHANGES

Rammed earth walls allow for subtle grade changes and the display of sculpture or desert landscape. Boulder groups transition slopes naturally.

- Uniform slopes with boulder outcroppings, dry stack, or rammed earth wall shall be used. These will be varied to create interesting areas for landscape or sculpture.
- The tops and toes slope rounding of fill slopes and undulate steepness shall be used and alternated with boulder groupings or earth walls to transition grades and increase visual interest while creating vegetation and rainwater harvesting pockets.
- Decorative freestanding art walls shall be used in a unifying pattern in all contiguous open areas of 1 acre and a minimum of 100 linear feet.
- Dry stack, rammed earth, and boulders shall be used to create grade changes in open landscape areas under one acre.

- Depth of all decorative rock mulches shall be no less than 3 inches.
- Landscape boulders shall be placed in clusters visible to motorists and pedestrians to enhance remnant parcels, fill slopes, and interchanges in focal areas.
- Landscape boulders shall be used in the following sizes and numbers at a minimum:

Small	1'x2'	600
Medium	2'x3'	400
Large	3'x4'	300

- In areas of non-concentrated drainage flows decorative rock shall be 1/2" minimum to 6" maximum.

DECORATIVE ROCK

Rock mulch shall be varied and employ multiple colors, sizes, and textures. Patterns and shapes created with rock mulch can lead to a view of special features such as sculptures and accent vegetation. A homogenous palette of rock mulch can produce negative views such as glare and a monotonous driving experience. Overuse of lightly colored mulch can create sunscald on plant material so shall not be used under or around vegetation.

Apache Gold Rock

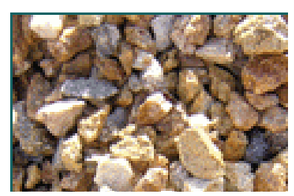

Gold Granite

Mojave Gold Rock

Kino Blue Riprap

GLASS MULCH

Glass mulch can avoid monotonous environments when used primarily as accents among rock mulch or as a groundplane feature or art piece. Large expanses of glass mulch is discouraged.

Recycled glass colors

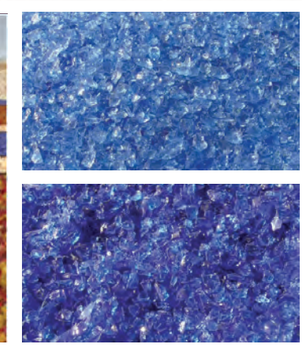

Recycled glass with epoxy coating can emulate water flow or water bodies

BOULDERS

Boulders can break up rock mulch areas by adding visual interest. They can also simulate a stream or linear path by drawing the eye to special site features such as a sculpture or other site accent, thus creating visual movement.

Boulders shall be placed in varying patterns and sizes and shall not have similar visual characteristics within the same grouping. Boulders to be buried 1/3 depth and oriented such that no scaring will show.

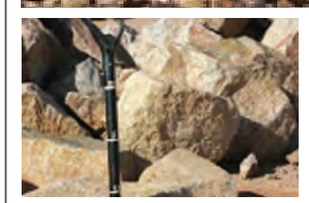

Desert Gold Boulders

Corona Brown Boulders

Kino Blue Boulders

4.0 VEGETATION

4.0 VEGETATION

Vegetation treatment types for the existing I-15 corridor vary from simple groundcover treatments to masses of varied vegetation. Vegetation for the Meadows Redux concept includes plant material from native Mojave specimens to diverse, regionally adapted plant material selected for color and seasonal interest.

Landscape plant material shall emulate the Meadows Redux theme with the use of grasses or grass-like plants in focal areas. Vegetation areas shall be concentrated in areas most visible to the traveling public on I-15, US 95, and local streets.

Vegetation shall be designed in coordination with groundplane treatments of rock mulches, boulders, berms, and land forms; wherever feasible, rainwater harvesting shall be sculpted into the land.

Enhanced Native

Native Revegetation

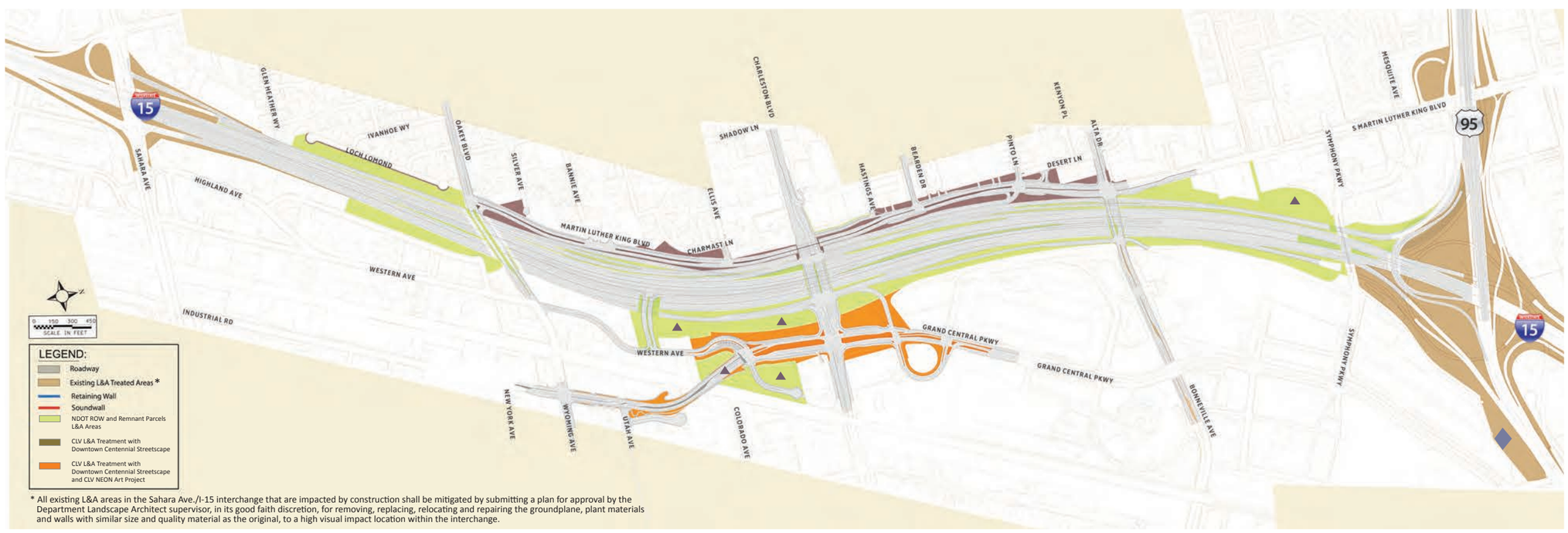

* All existing L&A areas in the Sahara Ave./I-15 interchange that are impacted by construction shall be mitigated by submitting a plan for approval by the Department Landscape Architect supervisor, in its good faith discretion, for removing, replacing, relocating and repairing the groundplane, plant materials and walls with similar size and quality material as the original, to a high visual impact location within the interchange.

- See City of Las Vegas L&A section of this document.
- Native revegetation seed shall be installed in interior areas of large remnant parcels shown with ▲.
- The existing berm will be removed, the area shall be treated to be compatible with the existing US 95 L&A treatments. Treatments shall include, land sculpting to add interest and varied topography without blocking views to adjacent properties; irrigation with a tap and meter within Department ROW shall be accessible to maintenance crews and compatible with District 1 Central Control system; drought tolerant species to match species and density of the existing Spaghetti Bowl theme and vegetation. Shown with ◆.

PLANT PALETTE - TREES

	Height x Width	Exposure to Sun	Water Requirement	Seasonal Interest
NATIVE VEGETATION				
Acacia greggii - Catclaw Acacia	15-25' x 15'	Full	Low	Spring/Fall
Chilopsis linearis - Desert Willow	20' x 15'	Full	Low to Medium	Spring/Fall
Prosopis glandulosa - Honey Mesquite	25' x 35'	Full	Medium	Summer
Yucca brevifolia - Joshua Tree	30' x 15'	Full	Low	Spring
ENHANCED NATIVE				
Acacia shaffneri - Twisted Acacia	18' x 20'	Full	Low	Spring
Acacia smallii - Sweet Acacia	10-35' X 15-25'	Full	Low	Spring
Cercidium microphyllum - Foothills Palo Verde	20' x 20'	Full	Low	Spring
Cordia parviflora - Little Leaf Cordia	4' x 8'	Full	Low	Summer
Parkinsonia aculeata - Mexican Palo Verde	30' x 30'	Full	Low	Spring
Rhus lancea - African Sumac	20' x 30'	Full to Partial	Low to Medium	Spring
REGIONALLY ADAPTED				
Cercidium Hybrid - Desert Museum Palo Verde	25' x 25'	Full	Low	Spring
Cordia boissieri - Texas Olive	10' x 10'	Full to Partial	Low	Summer
Parkinsonia floridum - Blue Palo Verde	20' x 25'	Full	Low	Spring

Note: Several of the plants listed above will require establishment from seed because they are not available in containers.

PLANT PALETTE - SHRUBS

	Height x Width	Exposure to Sun	Water Requirement	Seasonal Interest
NATIVE VEGETATION				
Ambrosia dumosa - White Bursage	2' x 3'	Full	Low	Fall/Spring
Atriplex canescens - Four Wing Saltbush	5' x 8'	Full	Low	Year round
Baccharis spp. – Baccharis ****note: plant male species only*	9' x 9'	Full to Partial	Low	Spring
Coleogyne ramosissima – Blackbrush ****note seed with Erioneuron pulchellum*	5'x6'	Full	Low	Spring
Ephedra nevadensis - Mormon Tea	3' x 3'	Full	Low	Year round
Larrea tridentata - Creosote Bush	10' x 10'	Full	Low	Spring
ENHANCED NATIVE				
Acacia cultriformis - Knifeleaf Acacia	10-15' x 10-15'	Full	Low	Spring
Cassia artemisiodes - Feathery Cassia	6' x 6'	Full	Low	Spring
Cassia nemophila - Desert Cassia	6' x 6'	Full	Low	Spring
Chrysothamnus nausseosus - Rabbit Brush	4' x 4'	Full to Partial	Low	Fall
Ephedra viridis - Mormon Tea	3' x 3'	Full	Low	Year Round
Eremophila spp. - Valentine (TM)	4' x 4'	Full	Low to Medium	Winter
Ericamerica larcifolia - Turpentine Bush	2' x 3'	Full	Low	Fall
Leucophyllum frutescens - Texas Ranger	5' x 5'	Full	Low	Summer
Santolina virens - Green Santolina	2' x 3'	Full	Low	Summer
Simmondsia chinensis - Jojoba	6' x 6'	Full	Low	Spring
REGIONALLY ADAPTED				
Anisacanthus quadrifidus - Mountain Flame	3' x 3'	Full to Partial	Low	Fall/Summer
Buddleia davidii - Navajo Purple Butterfly Bush	8' x 6'	Full to Partial	Low	Spring
Cassia phyllodenia - Silver Leaf Senna	6' X 6'	Full	Low	Spring
Chrysactinia mexicana - Damianita	2' x 2'	Full	Low	Summer
Convolvulus cneurom - Bush Morning Glory	2' x 3'	Full	Low	Spring/Fall
Dalea spp. - Dalea	4' x 5'	Full	Low	Fall
Dodonea viscosa - Hopbush	10' x 6'	Full	Low	Year Round
Leucophyllum spp. - Texas Ranger	4' x 4'	Full	Low	Summer
Rhus ovata - Sugar Bush	10' x 10'	Full to Partial	Low	Spring
Salvia clevelandii - Chaparral Sage	4' x 6'	Full	Low	Spring

- Trees shall be provided at a minimum of 10 per 1 acre of area.
- Grasses, shrubs, cactus, and perennial groundcovers shall be provided at a minimum of 40 per 1 acre of L&A treated areas and remnant parcels.
- Plantings shall be located in groupings for maximum impact.
- The landscape shall be planted to make the best use of the natural form of plants. Groups that require shearing to maintain the design aesthetic shall not be used.
- Plantings shall be designed in accordance with the Meadows Redux theme with native and Mojave desert-adapted low-water-use plants.
- Planting design, placement, and type shall respond to the defined hierarchy of treatment levels.
- At a minimum, plants shall be installed as 24-inch box trees (1.25" to 1.5" caliper, depending on species), 5-6 foot Joshua trees, 5-gallon containers for shrubs and cacti, and 1-gallon containers for groundcovers and perennials.

- Existing plants removed shall be mitigated per the Project NEON Technical Specifications.
- An efficient and effective temporary low-water-use irrigation system shall be used for the 2-year warranty and plant maintenance period.
- This system shall have an integral fertigation system that delivers controlled, organic-based fertilizer, soil amendments and conditioners, wetting agents, organic bio-stimulants, organic critter repellent, and insect control.
- The temporary irrigation system shall meet water purveyor requirements.
- No exposed above-ground systems will be allowed.
- The Design-Builder shall be responsible for all water and electrical service coordination, fees, and charges.
- For CLV irrigation requirements refer to TP Section 5.3.14 and Attachment 05-1 section 7.0 Local Agency Project Infrastructure.

PLANT PALETTE - CACTI, PERENNIALS, AND ACCENTS

	Height x Width	Exposure to Sun	Water Requirement	Seasonal Interest
NATIVE VEGETATION				
Baileya multiradiata - Desert Marigold	1' x 1'	Full to Partial	Low	Spring/Summer/Fall
Echinocereus engelmannii - Hedge Hog Cactus	4' x 1.25'	Full	Low	Year round
Encelia farinosa - Brittlebush	3' x 4'	Full	Low	Spring
Erioneuron pulchellum - Fluffgrass	2" x 6"	Full	Low	Spring/Summer
Ferocactus acanthodes - Barrel Cactus	3-5' x 1.5'	Full	Low	Spring/Summer
Fouquieria splendens - Ocotillo	15' x 5-25'			
Opuntia bigelovia - Teddy Bear Cholla	4' x 2'	Full	Low	Spring
Sphaeralcea ambigua - Desert Globemallow	3' x 3'	Full	Low	Spring
Yucca schidigera - Mojave Yucca	12' x 6'	Full	Low	Spring
ENHANCED NATIVE				
Erigeron divergens - Native Fleabane	1.5' x 1'	Full	Low	Summer
Ferocactus wislizenii - Fish Hook Barrel	5' x 2'	Full	Low	Summer
Opuntia microdasys - Polka Dot Cactus	3' x 3'	Full	Low	Summer
Psilotrophe cooperi - Paper Flower	1' x 1.5'	Full to Partial	Low to Medium	Spring/Summer/Fall
Santolina chamaecyparissus - Lavender Cotton	1.5' x 3'	Full	Low	Spring
Yucca spp. - Yucca	10' x 6'	Full	Low	Summer
REGIONALLY ADAPTED				
Agave weberi - Weber's Century Plant	3' x 2'	Full to Partial	Low	Summer
Artemisia frigida - Wormwood	1' x 1'	Full	Low	Spring
Convolvulus mauritanicus - Ground Morning Glory	1' x 3'	Full to Partial	Low	Spring/Summer
Hemerocallis spp. – Daylily	2' x 2'	Full to Partial	Low	Spring
Muhlenbergia rigens - Deer Grass	3' x 4'	Full	Low	Summer
Nolina erumpens - Beargrass	4' x 6'	Full	Low	Spring
Penstemon spp. - Penstemon	3' x 2'	Full	Low	Spring
Tulbaghia violacea - Society Garlic	3' x 3'	Full	Low	Spring/Summer

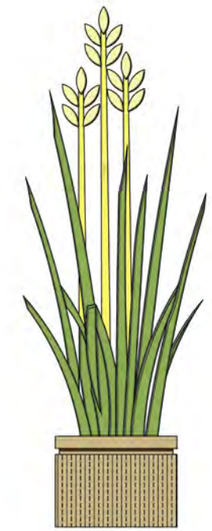

5.0 SCULPTURAL/ ARTISTIC FEATURES

5.0 SCULPTURAL/ARTISTIC FEATURES

INTRODUCTION

This section addresses sculptural/artistic features that shall be used throughout the Project NEON to enhance the Meadows Redux theme. These features shall be in the form of standalone features in the landscape or additions to bridges and walls.

Sculptural/artistic features are designed in scale and type and placed according to the defined hierarchy of treatment levels used as a guide throughout this document.

- A series of lighted gateway sculptural elements and lighted mainline sculptural shall be placed at outside bridge overpass/underpass at the following locations;
  Oakey Boulevard – Two large gateway sculptures shall be included, one at each outside bridge abutment, and four mainline sculptures.
  HOV Gateway - Two large gateway sculptures, four medium sculptures and six small sculptures shall be included leading to the entrance to the bridge overpass. In addition a minimum of two medium or four small sculptures shall be placed in the median between the underpass and Grand Central Blvd. Two mainline sculptures placed at outside bridge rails.
  Charleston Boulevard - Two large gateway sculptures shall be included, one at each outside bridge abutment and four mainline sculptures.
  Alta Drive / Bonneville Avenue – Two large gateway sculptures shall be included, one at each outside bridge abutment and four mainline sculptures.
  Symphony Parkway - Four mainline sculptures shall be included.
- The sculptures shall be of appropriate size and illumination to be visible from both the local streets below and the highway above.
- Sculptures shall be designed to portray the Meadow Redux theme without lighting during the day but shall transition to lighted art installation at night.

SCULPTURE

Sculptural features shall be used to accent walls, bridges, and remnant parcels in focal and landmark areas. They shall be characterized by excellence in craftsmanship, quality, and originality and shall have a minimum design life of 30 years.

Special attention shall be paid to the lighting of all installations so that they transform from the Meadows Redux theme during the day to a lighted gateway theme at night. A series of lighted verticle sculpural elements shall be installed to be seen from I-15 at bridge crossings of local streets and at the HOV gateway. Sculptures placed as focal points in the landscape shall be aesthetically lighted.

A family of sculptural elements shall vary in size and include Project NEON accent colors and wind- or motion-activated elements. The wind- or motion-activated system of sculptural elements shall have a minimum design life of 10 years, shall be accessible and easily maintained with standard practices.

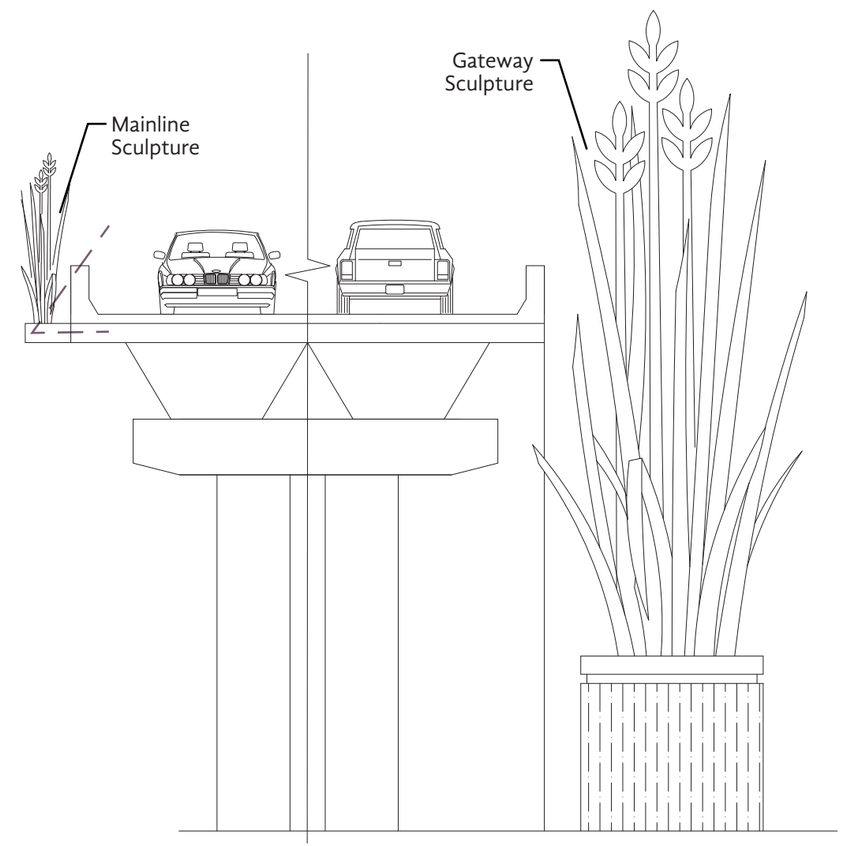

The largest sculptural element shall be visible from the elevated highway and shall provide both daytime color and nighttime lighting effects.

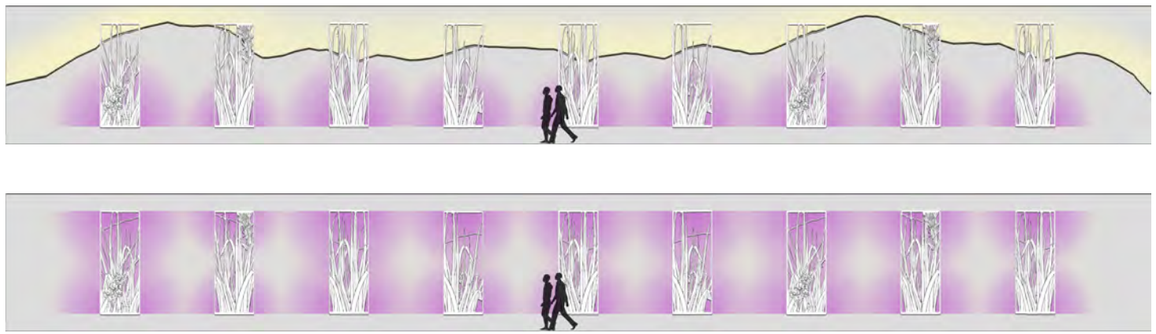

UNDERPASS ART PANELS

The I-15 bridges spanning the HOV entrance/exit, Charleston Boulevard and Symphony Parkway underpass provide opportunities to showcase a day-to-night transition as travelers enter and exit the Downtown Arts District and Las Vegas Government Center area. Attention shall focus on underpass abutment walls where as many as eight bridge structures pass overhead. Meadows Redux underpass art panels shall provide a colorful texture by day then transform into a iconic lighted art installation after dark. Panel installations shall be durable and vandal-resistant and shall enhance the safe movement of both pedestrians and drivers.

- Underpass art panels shall provide at a minimum the light level required for pedestrians and shall have automatic/remote controls for color and timing.
- Underpass art panels shall cover a minimum of 75 percent of the exposed wall height for each installation.
- Underpass art panels shall cover a minimum of 33 percent of the total horizontal distance of each designated overpass structure. Panels shall be no less than 5 panels per 150 linear feet.
- Supplementary lighting may be allowed if it is incorporated and integrated into the Meadows Redux Underpass Art Panel theme.

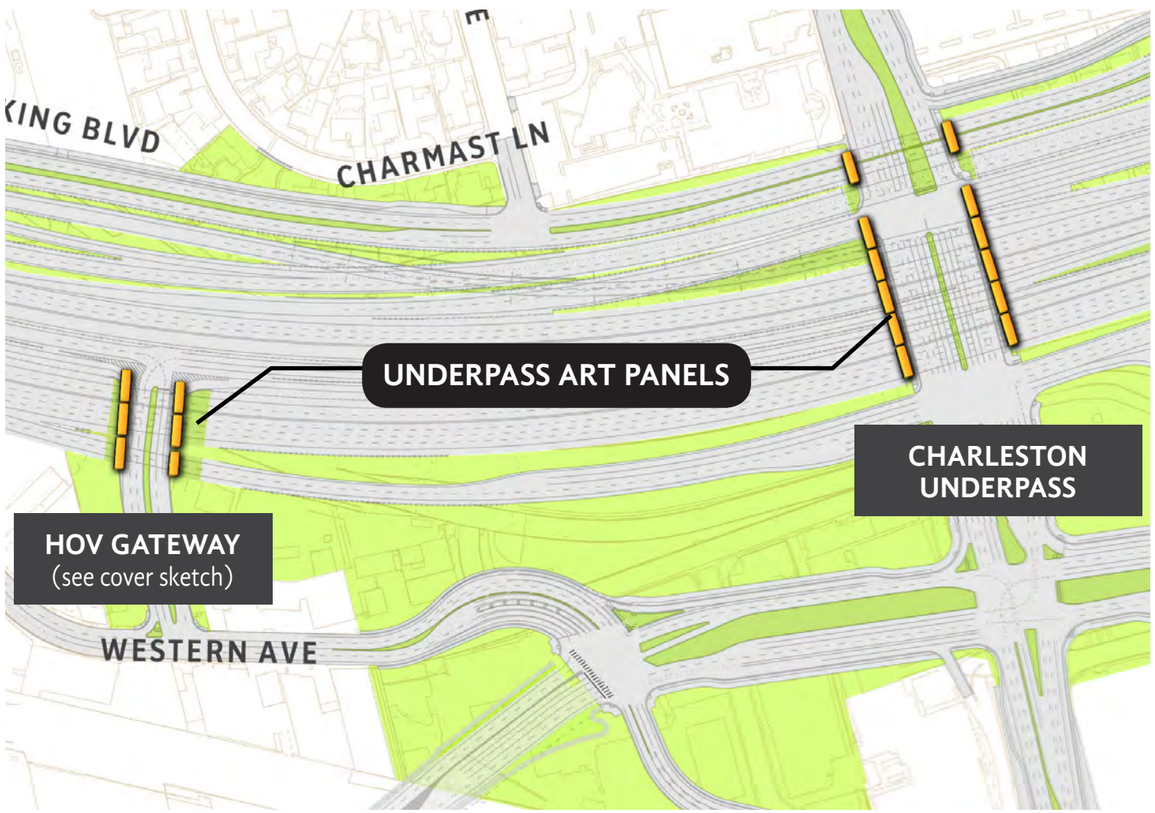

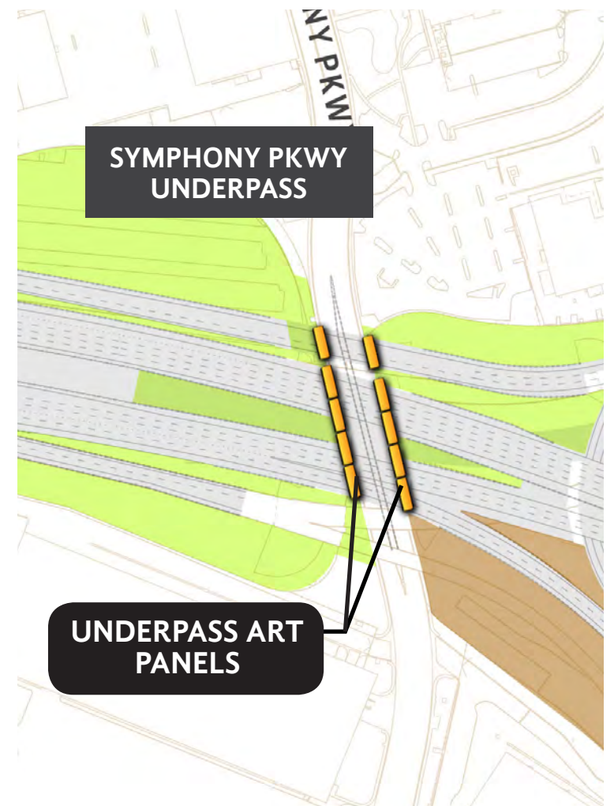

Lighted art panels depicting a Meadows Redux scene shall line bridge abutment walls at the HOV Gateway Charleston Boulevard overpasses and Symphony Parkway Underpass. Lighting may include color changes or motion activation.

- Large-size art appliqué installations (minimum 10 feet by 12 feet) shall be placed along mainline areas as transitions between graphic murals on soundwalls and retaining walls.
- Medium-sized art appliqué installations (minimum 8 feet by 10 feet) shall be grouped with small appliqués to add visual interest to areas of significance or where driver speed is reduced. These areas include large slope-paved areas, on-ramps and off-ramps, or at bridge underpasses.
- Small-sized art appliqué installations (minimum 5 feet by 7 feet), when not used along with larger applications, shall be placed in groups of no fewer than five.
- The following minimums are required on the project:
  - 20 large-size art appliqués
  - 50 medium-size art appliqués
  - 45 small-size art appliqués
- Slope paving is undesirable. In the event slope pave is approved by the Department, additional medium and small-size appliqués are required.

APPLIQUÉS

Appliqué art panels showing desert wildlife shall be placed on walls or bridges to add visual interest. A greater concentration of panels shall be placed where drivers travel at slower speeds. Animal appliqués shall be scaled relative to their size and in scale to each other.

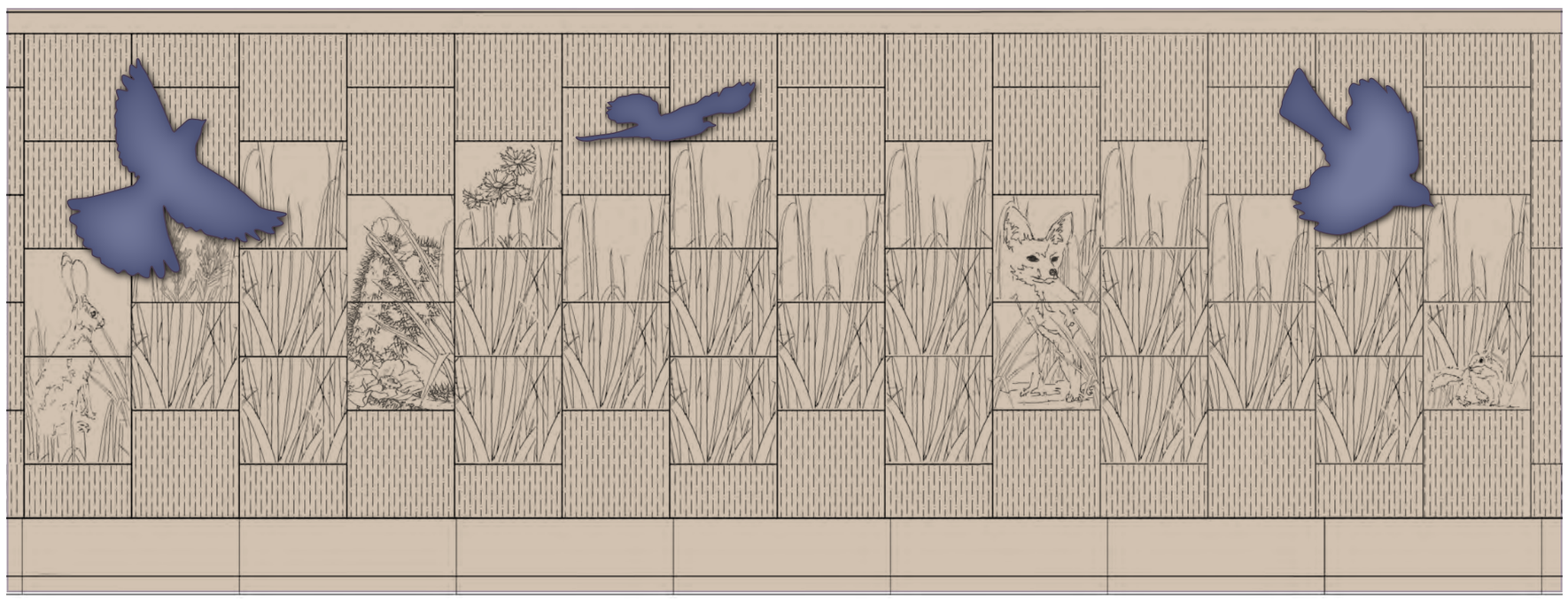

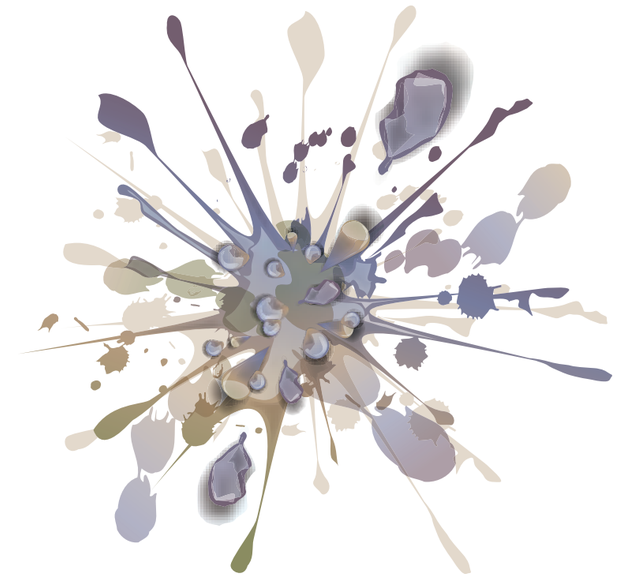

6. COLOR PALETTE

6. COLOR PALETTE

COLOR PALETTE APPLICATION

A uniform, consistent color palette shall be used for all highway structures. The standard NDOT practice is to use a uniform and consistent color palette for all new and existing highway structures to complement the surrounding landscape. Base and accent stain or paint colors for all NDOT highways have been selected. To ensure accurate color references, the colors are matched to the Dunn-Edwards system (shown right).

Each highway structure shall use the selected base color and up to two accent colors. Roadway structures within a single landscape design segment shall use the same base color and accent color(s). As existing structures require refinishing, they shall be stained or repainted to be consistent with the selected color palette. Existing art is exempt from this color palette requirement.

Accent colors shall be used to highlight structural aspects and/or details of highway structures, such as the girder of a bridge or a barrier rail. Accent color application shall logically respond to and reinforce structural features or change in materials.

Surface stain Desert Varnish specifically formulated for galvanized metal (hereafter referred to as Desert Varnish) creates a permanent natural earth tone when applied to galvanized steel. Desert Varnish shall be applied to galvanized steel surfaces including fencing, fabric posts and gates, pedestrian light poles, signal-sign bridges and poles, and guardrails.

BASE COLOR

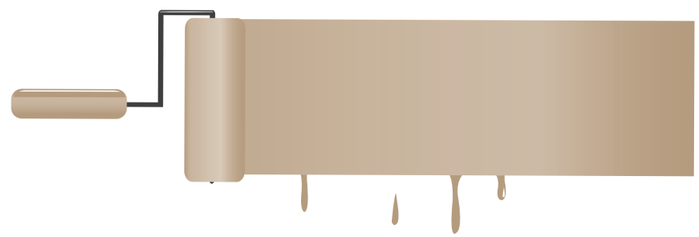

DE 6130
Wooded Acre

NEON SELECTED ACCENT COLORS

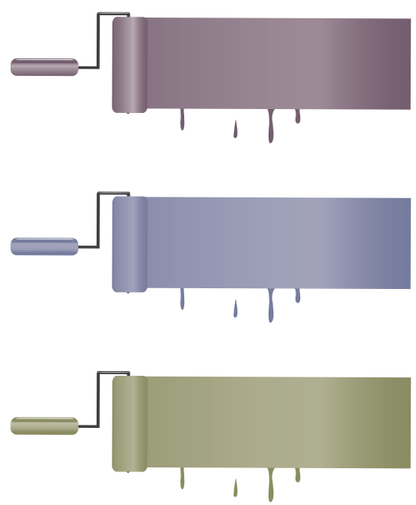

DE 5978
Plum Wine

DE 5914
Bossa Nova Blue

DE 5537
Woodland Walk

- The color palette has been selected for the Project NEON DB 1-4. These colors shall be used on all landscape and aesthetic features, barriers, structural features, and groundplane treatments.
- The base color shall be used on roadway or bridge barriers, columns, retaining walls and soundwalls to present a consistent color from top to bottom with addition of accent colors.
- Fencing, fabric, posts, gates, sign poles, traffic light poles, signal-sign bridges and poles, and pedestrian light poles shall be treated with Desert Varnish.
- Guardrails shall be galvanized and treated with Desert Varnish.
- Color for sculptural/artistic features shall be chosen from the selected accent colors or treated with a complementary thematic finish.
- Desert Varnish formulated for concrete shall be applied to all existing or new concrete open channels, concrete drainage swales or exposed surfaces of open storm drain confluence structures such as headwalls.
- Control of access fencing shall be treated with Desert Varnish.

- Existing Spaghetti Bowl structures shown on plan shall be painted I-15/ US-95 color themes.
- Existing surfaces to be painted with base color include but not limited to, barrier rails (both inside and outside), monuments, bridges, bridge rail, bridge columns, girders, soundwalls, retaining walls, and slope paving.
- All existing barrier rail outside surfaces shall be painted with one accent color (Plum Wine).
- All existing aesthetic painted thematic design elements shall be inspected, cleaned, repaired, restored, repainted per Section 20 (Maintenance Requirements) of the Technical Provisions.
- All existing plant material, art and groundplane treatments shall be protected from paint overspray.

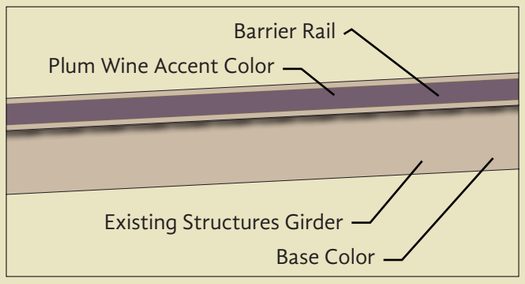

US 95 BASE COLOR

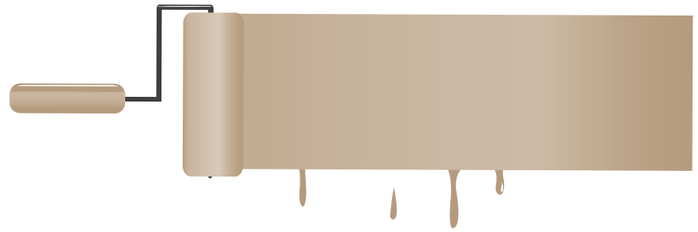

BBB3A2
Flintstone

US 95 SELECTED ACCENT COLORS

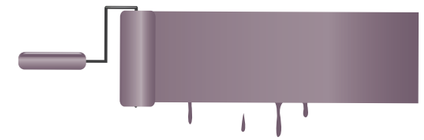

DE 5978
Plum Wine

7.0 LOCAL AGENCY PROJECT INFRASTRUCTURE

7.0 LOCAL AGENCY PROJECT INFRASTRUCTURE

L&A Work that will be locally maintained and operated infrastructure and will be designed and constructed to City of Las Vegas Downtown Centennial Standards. Design-Builder shall maintain those treatments through a two year maintenance and establishment period, and until the City of Las Vegas's acceptance of the said improvements, in a manner consistent with City of Las Vegas standards and practices.

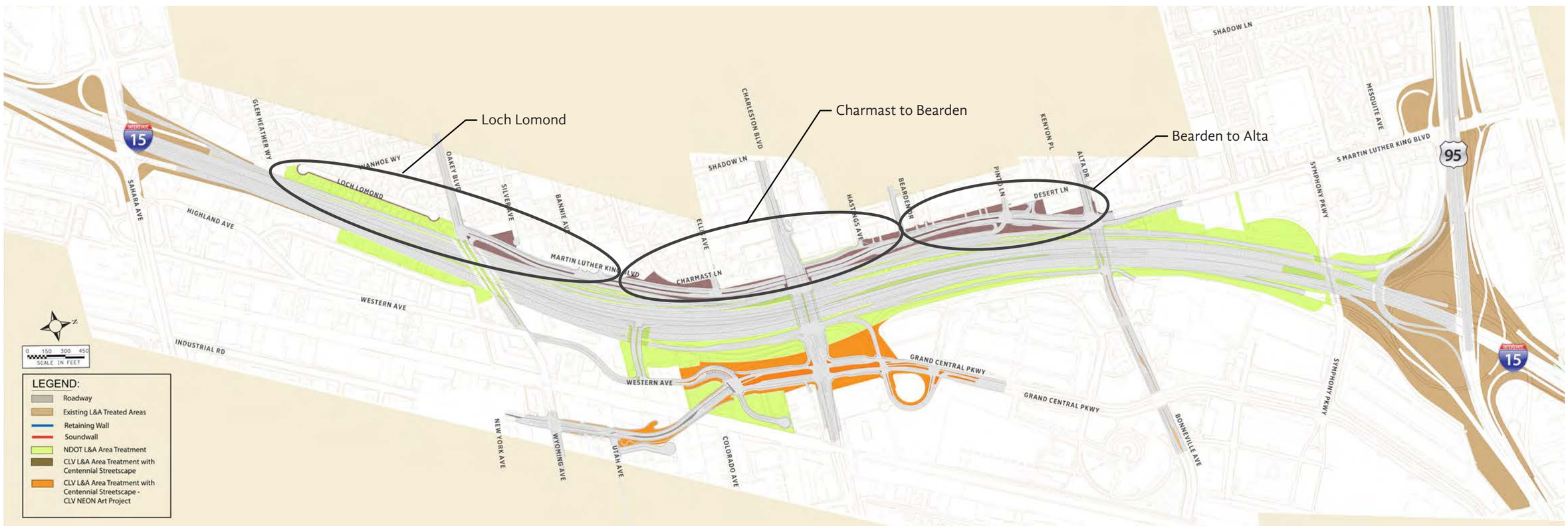

- Sidewalks shall be 10' wide.
- Amenity Zone between sidewalk and roadways shall be 5" wide and contain deciduous street -trees with 30' on center spacing.
- Planted medians shall contain street trees with 30' on center spacing.
- Trees planted in medians and streetscape amenity zones shall be a minimum of 36-inch box (2.25"-2.5" caliper depending on species). Shrubs and cacti shall be a minimum size of 5-gallon containers, and 1-gallon containers for groundcovers and perennials.
- Complimentary species of desert trees shall be planted outside the sidewalk where space allows with 60' on center spacing.
- 5' amenity zones under Project NEON Bridges shall be colored and textured concrete.
- Planting of desert grasses, shrubs, and perennial groundcovers shall be provided in remnant parcels at 40 per 1 acre of area.
- Plants installed in remnant parcels shall be, at a minimum, 24" box trees (1.25" caliper depending on species), 5-6 foot Joshua trees, 5-gallon containers of shrubs and cacti, and 1-gallon containers for containers and perennials.
- Plantings shall be located in groupings for maximum impact.
- An efficient and effective low-water use irrigation system shall be used. This system shall have an integral fertigation system that delivers controlled, organic-based fertilizer, soil amendments and conditioners, wetting agents, organic bio-stimulants, organic critter repellent, and insect control.

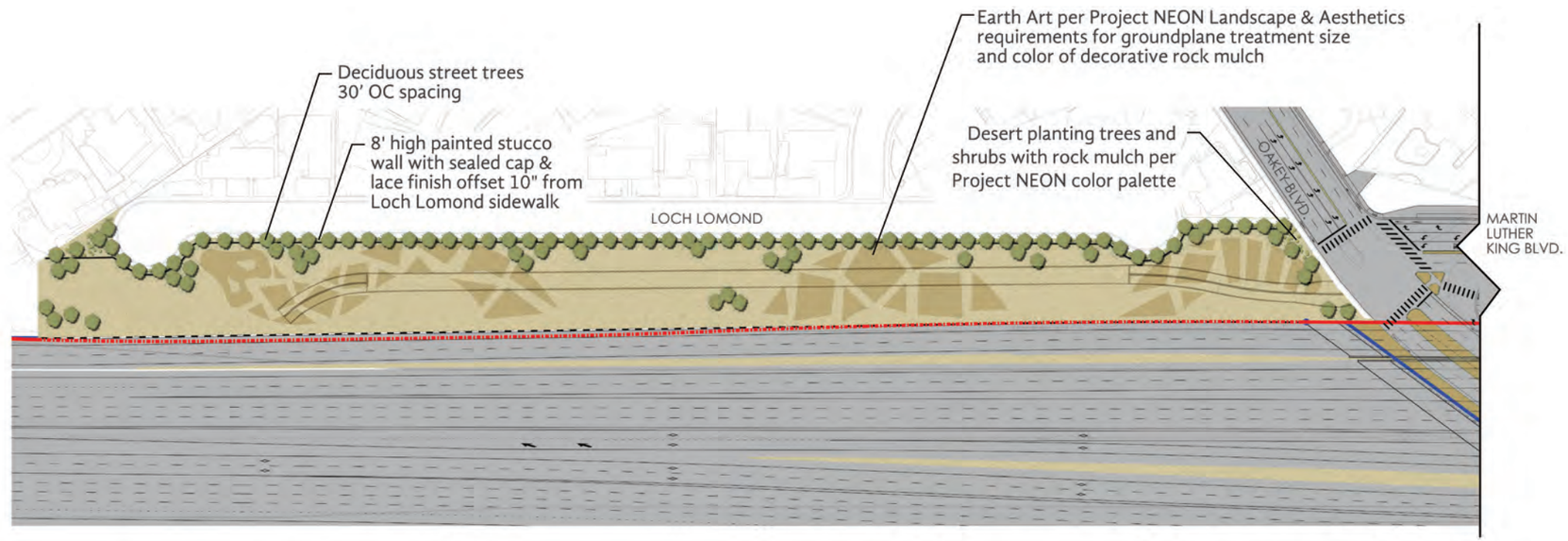

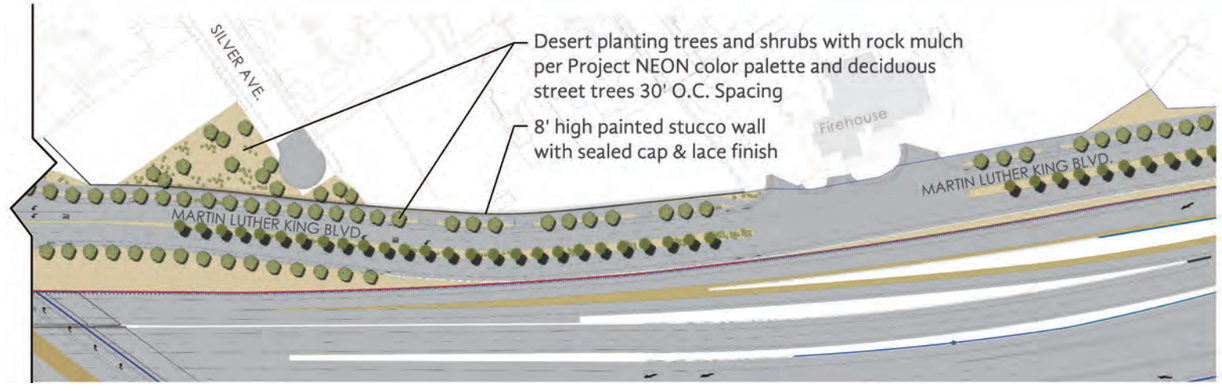

Remnant Parcels - Loch Lomond

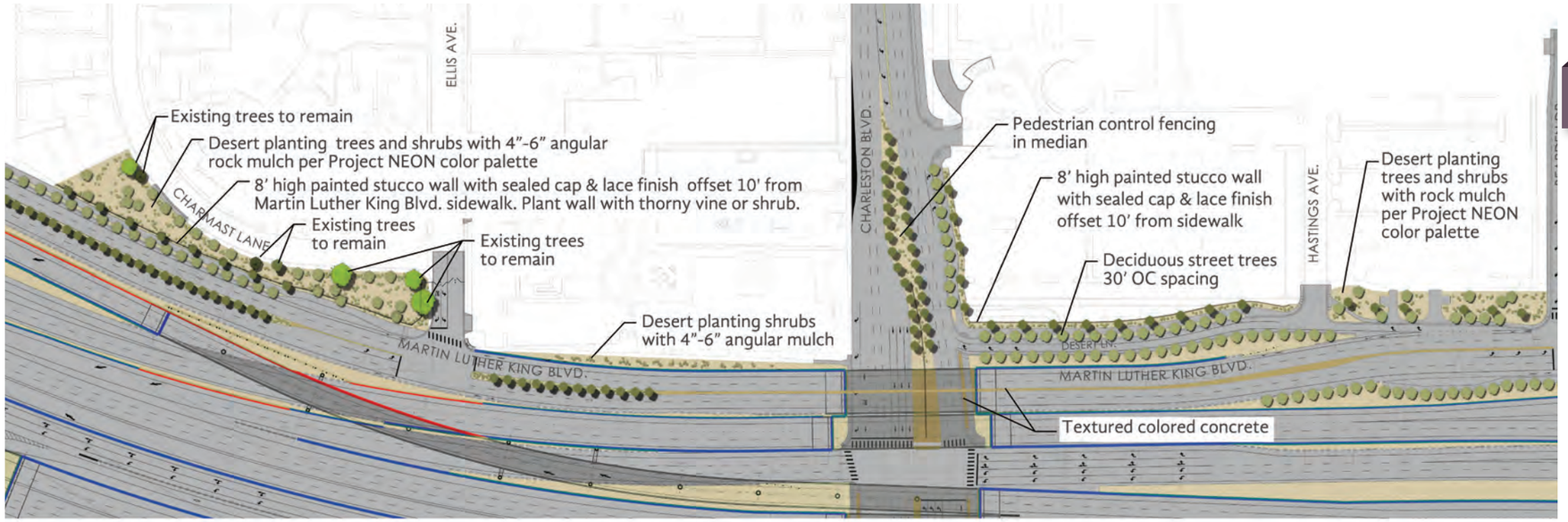

Remnant Parcels - Charmast to Bearden

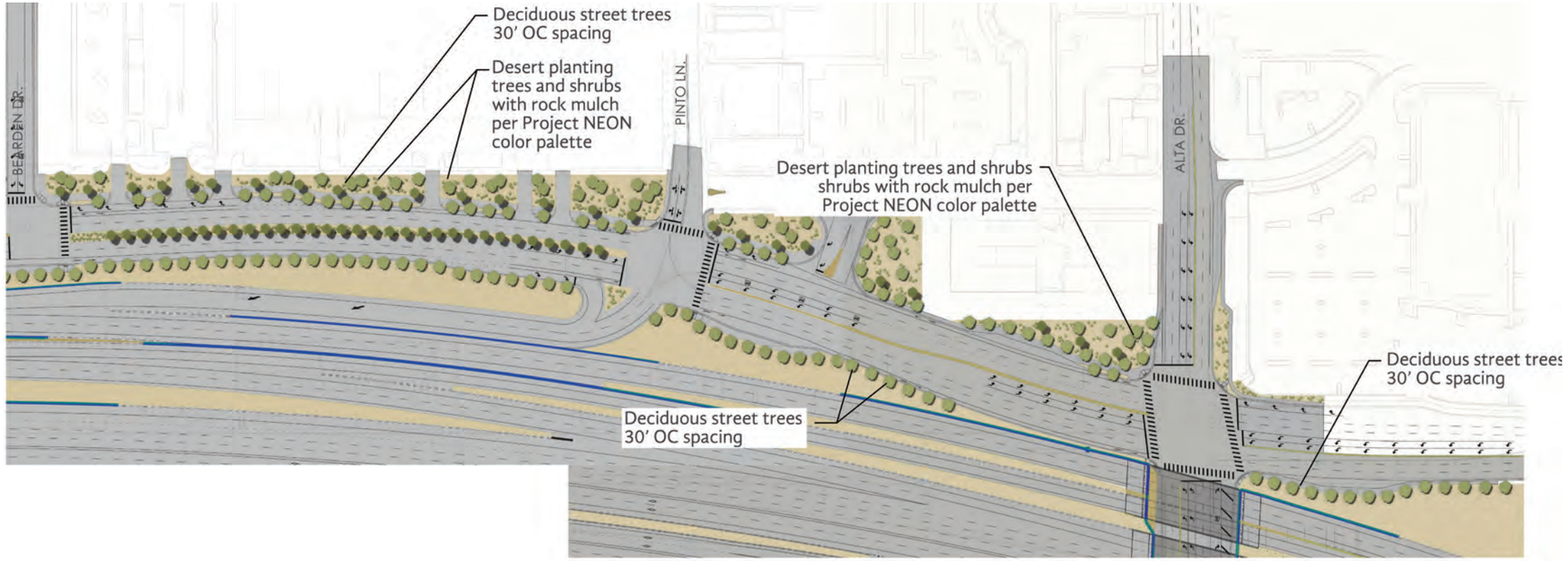

Remnant Parcels - Bearden to Alta

- The landscape shall be planted to make the best use of the natural form of plants. Groups that require shearing to maintain the design aesthetic shall not be used.
- The irrigation system shall meet City of Las Vegas design Requirements.
- Patterns, sizes, and textures of rock mulch shall be used in combination with plant material.
- A varied groundplane shall be created by the size, color, texture, and configuration of treatments.
- A variety of mulch colors that correspond to the corridor's base color and the natural surrounding groundplane shall be used.
- The color of rock mulch shall be coordinated to provide harmony with the corridor theme colors and surrounding environment.
- A variety of rock sizes shall be incorporated into the design.
- Uniformly sized and colored rock mulch in large expanses shall not be accepted.
- All exposed ground shall be treated to include as a minimum earthforms, decorative rock, and earth art.
- In Downtown Centennial Area, poles and appurtenances shall be painted "Black Green" RAL 6012.
- CLV bridge and wall structures shall comply with Meadow Redux theme colors (base and accent) and textures. Refer to 1.0 Bridge Aesthetics and 2.0 Wall Aesthetics.
- In Downtown Centennial Area, pedestrian railings shall be painted a Meadow Redux accent color to complement the bridge and wall aesthetics.

ATTACHMENT 07-1
PERMITS AND STATUS

Department-Provided Approvals

Location	Approval Name	Administrating Agency	Approval Date
Project	Record of Decision	FHWA	2010
Project	Final EIS	FHWA	2010
Project	Final EIS Reevaluation	FHWA	2012
Project	Final EIS Reevaluation	FHWA	Pending

Major Environmental Approvals

Location	Approval Name	Administrating Agency	Major Environmental Approval Deadline
Project	Section 404 Permit: Discharge of dredged or fill material into Waters of the U.S. (jurisdiction begins at OHWM) (aboveground drainage feature west of I-15 and south of Sahara Drive between South Rancho Drive and I-15)	U.S. Army Corps of Engineers (USACE)	Within 120 days of the resource agencies receipt of Design-Builder's complete design and information package.
Project	Section 401 Water Quality Certification Permit Discharge of dredged or fill material into Waters of the U.S. (drainage feature west of I-15 and south of Sahara Drive between South Rancho Drive and I-15)	Nevada Division of Environmental Protection	Within 150 days of the resource agencies receipt of Design-Builder's complete design and information package.

Note:
On January 23, 2013 the Department sent a preliminary Jurisdictional Determination Report to the U.S. Army Corps of Engineers (USACE) seeking the agency's input on whether there are Waters of the U.S. within the Site. On March 3, 2014 the USACE sent a letter to the Department indicating that the only potential Water of the U.S. in the Project area is a drainage feature on the west side of I-15 between South Rancho Drive and I-15, which extends approximately 2,169 feet between Meade Avenue on the south and a point between Kings Way and West Sahara Avenue on the north. Section 7.5.1.3 (*Waters of the United States*) of the Technical Provisions provides further information.

This page intentionally left blank.

ATTACHMENT 08-1
DRAINAGE DESIGN CRITERIA SUMMARY

This page intentionally left blank.

Design Criteria		Design Summary	Reference
Hydrologic Parameters	HEC-1 (SCS Unit Hydrograph or Kinematic Wave)	Use for offsite flows to storm sewers, inlets, roadside ditches, and culverts typically up to 100 square miles	NDOT *Drainage Manual,* Section 3 *Hydrologic Criteria Drainage Design Manual (HCDDM)* National Oceanic and Atmospheric Administration (NOAA) atlases
	Rational Method	Use for onsite flows to storm sewers, inlets, roadside ditches, and culverts, and typically up to 150 acres	
	Natural Resources Conservation Service (NRCS) TR-55 Method	Use for offsite flows to storm sewers, inlets, roadside ditches, and culverts typically up to 150 acres	
	Refer to *HCDDM,* Section 304.3, for Stormwater Runoff Determination Computation Procedures and Section 3.2 of the NDOT *Drainage Manua*l for additional guidance.		
	Time of Concentration	NRCS (TR-55)	
		Maximum sheet flow = 300 feet	
		Minimum Tc = 5 minutes	
	Rainfall Data	Offsite Hydrology - from *HCDDM,* Section 500 -or- Onsite Hydrology - obtain from NOAA atlas 14 Use single gauge	
	Rainfall Distribution (*HCDDM,* Table 503)	SDN3 Distribution – Tributary Area is less than 8 square miles SDN4 Distribution – Tributary Area is greater than or equal to 8 square miles and less than 12 square miles SDN5 Distribution – Tributary Area is greater than or equal to 12 square miles	
	Runoff Coefficients	*HCDDM,* Section 600	
	NRCS Curve Numbers	*HCDDM,* Section 600	

Design Criteria		Design Summary	Reference
CCRFCD Master Plan Update (MPU) Facilities	Design Storm	100-year Proposed Condition flow to verify Project NEON improvements do not negatively impact the area more than the Existing Conditions	*HCDDM*
		100-year Ultimate Condition flow to verify all applicable criteria are met.	
	Design Procedures	Acceptable methods per NDOT *Drainage Manual* and *HCDDM*	
	Maximum Allowable Velocity	Refer to *HCDDM*, Table 703	
	Freeboard	*HCDDM,* Section 706.1.3 or Section 706.2.4	
	Channel Lining	100-year design storm – Design for the worse case flow parameters between Proposed Condition and Ultimate Condition	
		All lining shall be in accordance with NDOT *Drainage Manual* and *HCDDM*	
	Flow Superelevation	2 feet maximum per *HCDDM,* Section 706	
Roadside Ditches (Open Channels)	Design Storm	Per NDOT *Drainage Manual/ HCDDM* appropriate requirements	NDOT *Drainage Manual* *HCDDM* Section 700
		Proposed Condition flow to verify Project NEON improvements do not negatively impact the area more than the Existing Conditions	
		Ultimate Condition flow to verify all applicable criteria are met.	
	Design Procedures	Manning's equation	
	Maximum Allowable Velocity	Refer to *HCDDM,* Table 703	
	Freeboard	*HCDDM,* Section 706.1.3 or Section 706.2.4	
	Channel Lining	Design for the worse case flow parameters between Proposed Condition and Ultimate Condition	
		All lining shall be in accordance with NDOT *Drainage Manual* and *HCDDM*	
	Side Slopes	2:1 maximum for riprap-lined channels	
		3:1 maximum outside of clear zone 6:1 within clear zone or protect.	
		Shall meet clear-zone requirements	

Design Criteria		Design Summary	Reference
Culverts	Design Storm	Per NDOT *Drainage Manual HCDDM* appropriate requirements	NDOT *Drainage Manual HCDDM,* Section 1000
		Proposed Condition flow to verify Project NEON improvements do not negatively impact the area more than the Existing Conditions	
		Ultimate Condition flow to verify all applicable criteria are met.	
	Culvert Roughness	Minimum value of n = 0.012 for smooth wall and minimum value of n = 0.024 for corrugated wall	
	Minimum Size (Diameter)	24-inch minimum on interstate system (or equivalent diameter) 18-inch minimum (or equivalent diameter)	
	Maximum Velocity (V) and Outlet Protection	V<5 feet/second – Minimum Riprap Protection	
		5 feet/second ≤ V < 15 feet/second – Riprap Protection or Energy Dissipater	
		V≥15 feet/second – Use Energy Dissipator	
	Energy Dissipators	Refer to *HCDDM,* Section 1102 and NDOT *Drainage Manual*	
	Slope	0.3% minimum, except where limited due to the existing tie in location	
Spread Criteria	Freeways (mainline, ramps, bridges):	Design: 25-year (edge of travel lane)	NDOT *Drainage Manual HCDDM*
	Ramps, gores, auxiliary lanes, acceleration and deceleration lanes with striped lane widths >12 feet	Design: 25-year – 12 foot dry lane within lane striping	
	Local Roads	Design: For the Ultimate Condition flow – 10-year and 100-year requirements per *HCDDM,* Section 303.4	
		Design: For the Proposed Condition flow – 10-year and 100-year flow conditions do not negatively impact adjacent properties	
Manholes, Drop Inlets, and Scuppers (where allowed)	Drainage Structure Types	Outside of NDOT right-of-way (ROW) – Clark County Standard Drawings and Specifications	NDOT *Drainage Manual HCDDM*
	Maximum Manhole Spacing	Pipes 24-inch or less – 300 feet Pipes over 24-inch – 400 feet	
	Minimum difference between invert and outlet pipe invert elevations	0.1 foot, unless flat slopes for connecting pipes, then use the through slope of the storm drain system	

Design Criteria		Design Summary	Reference
	Inlet Location	Onsite: Refer to NDOT *Drainage Manual,* Section 3.3.2.2 for onsite inlet location or *HCDDM,* as appropriate	
		Offsite: Refer to *HCDDM* and Clark County Standard Drawings and Specifications and NDOT *Drainage Manual* for offsite inlet locations	
	Inlet Spacing	Dependent on Roadway Spread Criteria and key collection points	
	Clogging	0% on grade elevated freeway drop inlets 25% on grade drop inlets 50% sag locations drop inlets 35% on grade elevated freeway scuppers 35% on grade scuppers 50% sag locations or flat sections of roadway (< 0.3% longitudinal slope) scuppers	
Storm Sewer Networks	Design Storm – Freeways and Ramps	Per NDOT *Drainage Manual/ HCDDM* appropriate requirements	NDOT *Drainage Manual* *HCDDM*
	Design Storm – Non-Freeways	Per NDOT *Drainage Manual/ HCDDM* appropriate requirements	
		10-year and 100-year Proposed Condition flow to verify Project NEON improvements do not negatively impact the area more than the Existing Conditions	
		10-year and 100-year Ultimate Condition flow to verify all applicable criteria are met.	
	Minimum Size	18-inch diameter 12-inch diameter for down drains	
	Minimum Slope	Slope to ensure 3 feet/second or no less than 0.3 percent, except where limited due to the existing tie in location	
	Maximum Level of Surcharging	Ultimate Condition flow with maximum hydraulic grade level (HGL) to 1 foot below the final grade above the storm sewer at all locations	
		Proposed Condition flow HGL shall not exceed the Existing Condition HGL	
		New Facilities (independent system, unaffected by existing surcharging drainage facilities) – Proposed Condition flow & Ultimate Condition flow with maximum hydraulic grade level (HGL) to 1 foot below the final grade above the storm sewer at all locations	

Design Criteria		Design Summary	Reference
	Design Velocities	3 feet/second minimum (design flow)	
		25 feet/second maximum (design flow)	
	Outlet Velocities (V) and Protection	V<5 feet/second – Minimum Riprap Protection	
		5 feet/second ≤ V < 15 feet/second – Riprap Protection or Energy Dissipater	
		V≥15 feet/second – Use Energy Dissipator	
Bridges	Bridge Deck Drainage	Refer to NDOT *Drainage Manual* Section 3.3.2.2.6 or *HCDDM* as appropriate	NDOT *Drainage Manual* *HCDDM*
Flood Zone	CLOMR/LOMR	FEMA guidelines and procedures	FEMA

This page intentionally left blank.

ATTACHMENT 08-2
DRAINAGE DESIGN COMPONENTS: REQUIREMENTS / LIMITATIONS / PROHIBITIONS

This page intentionally left blank.

Drainage Design Component	**Required/ Limited/ Restricted**
Steel or Iron Grates.	Required
Bridge Drains – Ultraviolet (UV) protected fiberglass-reinforced pipe (FRP) or steel pipe with 8-inch minimum diameter.	Required
Channel Linings – Articulated Concrete Block, Partially Grouted Riprap (per HEC-23), Loose Riprap, or Concrete.	Required
Reinforced-concrete pipe (RCP) and reinforced-concrete box (RCB) under I-15 mainline ramps, major arterials, or other locations where required by the Department or Local Agencies.	Required
Water tight joints behind walls and on all flexible pipe and where leakage /infiltration is a concern.	Required
Concrete headwalls, metal or precast concrete end sections, or similar outfall treatment.	Required
Drop Inlet with reinforced concrete or corrugated high-density polyethylene (HDPE) pipe riser in shoulder area.	Required
Minimum Fill Height Requirements on Box Culverts – see Section 14.3.6 (*Drainage Structures*) of these Technical Provisions.	Required
Underdrain System wrapped in the appropriate geotextile fabric and provide a functional 100-year design life, where subgrade drainage to accommodate groundwater is necessary.	Limited Use
Scuppers – circular or rectangular, 9-inch-high by 18-inch-wide opening in concrete barrier with constant slope face or 6-inch-high by 24-inch-wide opening in F-shape concrete barrier; approved in accordance with National Cooperative Highway Research Program (NCHRP) Report 350; must be configured such that debris will not be able to collect and restrict flow; may be considered for use in areas where drop inlets are not desirable, it is difficult to meet spread criteria, and must be approved on a case by case basis by the Department. Limited use upon approval of Deviation in accordance with Section 1.2.10 (*Deviations to the Technical Provisions*).	Limited Use
Linear Drains (Trench or Slotted) must be configured such that debris will not be able to collect and restrict flow and per the requirements in Section 8.3.6 (*Inlets*) of these Technical Provisions. Limited use upon approval of Deviation in accordance with Section 1.2.10 (*Deviations to the Technical Provisions*).	Limited Use
Structures not conforming to NDOT or local standards as appropriate. Limited use upon approval of Deviation in accordance with Section 1.2.10 (*Deviations to the Technical Provisions*).	Limited Use
Detention Basins – except where other flood protection or mitigation is not available.	Prohibited
Retention Basins – except for rainwater harvesting purposes as specified in Section 5 (*Landscape and Aesthetics*) of these Technical Provisions.	Prohibited
Plastic Pipe and corrugated metal pipe (CMP) under freeway mainline, ramps, or major arterials. HDPE pipe may be used for pipe risers, vertical drop shafts, or similar when located in the roadway shoulder and not under the travel lanes.	Prohibited
Polyvinyl chloride (PVC) and single-wall HDPE Storm Drain/Culverts.	Prohibited
Plastic Drop Inlets – unless encased in structural concrete with steel or iron grates.	Prohibited
Bridge Drains – PVC or HDPE.	Prohibited
Closed Conveyances with an open or soft bottom.	Prohibited
Channel Lining – Gabions.	Prohibited
Channel Lining – Fully Grouted Riprap.	Prohibited
Channel Lining relying on geotextiles and vegetative uptake.	Prohibited

This page intentionally left blank.

ATTACHMENT 09-1
FREEWAY DESIGN CRITERIA

This page intentionally left blank.

DESIGN STANDARDS	DESIGN CRITERIA - FREEWAY SYSTEM						
	INTERSTATE	MANAGED LANES – HOV	MANAGE LANES – HOV DIRECT CONNECTOR[1]	MANAGED DROP RAMP – HOV	RAMP	SYSTEM CONNECTOR	COLLECTOR DISTRIBUTOR
Functional Classification	Interstate	Interstate	Ramp	Ramp	Ramp	System Connector	Collector Distributor
Ownership	NDOT	NDOT	NDOT	NDOT	NDOT	NDOT	NDOT
Access	Full	Full	Full	Full	Full	Full	Full
Design Speed (DS) (mph) (Upper/Middle/Lower Ranges, where applicable) for Ramps	70	70	50	60/50/35	60/50/35[2]	60/50/40[2]	65
Posted Speed (mph)	65	65	45	VARIES	VARIES	VARIES	65
Design Vehicle	WB-67	A-BUS	A-BUS	A-BUS	WB-67	WB-67	WB-67
Minimum Stopping Sight Distance (feet)	730	730	425	570/425/250	570/425/250	570/425/305	645
Stopping Sight Distance Adjustments for Grades	AASHTO 2011 Table 3-2	AASHTO 2011 Table 3-2	AASHTO 2011 Table 3-2	AASHTO 2011 Table 3-2	AASHTO 2011 Table 3-2	AASHTO 2011 Table 3-2	AASHTO 2011 Table 3-2
GEOMETRY							
Horizontal							
Minimum Horizontal Radius Curve (feet)	AASHTO 2011 Table 3-10b	AASHTO 2011 Table 3-10b	AASHTO 2011 Table 3-10b	AASHTO 2011 Table 3-10b	AASHTO 2011 Table 3-10b[3,4]	AASHTO 2011 Table 3-10b[3]	AASHTO 2011 Table 3-10b
Minimum Length of Curve (feet)	AASHTO 2011 Section 3.3.13	AASHTO 2011 Section 3.3.13	AASHTO 2011 Section 3.3.13	AASHTO 2011 Section 3.3.13	AASHTO 2011 Section 3.3.13	AASHTO 2011 Section 3.3.13	AASHTO 2011 Section 3.3.13
Maximum Superelevation (%)	8	8	8	8	8	8	8
Design Superelevation Rate	AASHTO 2011 Table 3-10b	AASHTO 2011 Table 3-10b	AASHTO 2011 Table 3-10b	AASHTO 2011 Table 3-10b	AASHTO 2011 Table 3-10b[3,4]	AASHTO 2011 Table 3-10b[3]	AASHTO 2011 Table 3-10b
Minimum Length of Runoff	AASHTO 2011 Table 3-17b AASHTO 2011 Equation 3-23	AASHTO 2011 Table 3-17b AASHTO 2011 Equation 3-23	AASHTO 2011 Table 3-17b AASHTO 2011 Equation 3-23	AASHTO 2011 Table 3-17b AASHTO 2011 Equation 3-23	AASHTO 2011 Table 3-17b AASHTO 2011 Equation 3-23	AASHTO 2011 Table 3-17b AASHTO 2011 Equation 3-23	AASHTO 2011 Table 3-17b AASHTO 2011 Equation 3-23
Minimum Length of Runout	AASHTO 2011 Equation 3-24	AASHTO 2011 Equation 3-24	AASHTO 2011 Equation 3-24	AASHTO 2011 Equation 3-24	AASHTO 2011 Equation 3-24	AASHTO 2011 Equation 3-24	AASHTO 2011 Equation 3-24
% of Runoff on Tangent	AASHTO 2011 Table 3-18	AASHTO 2011 Table 3-18	AASHTO 2011 Table 3-18	AASHTO 2011 Table 3-18	AASHTO 2011 Table 3-18	AASHTO 2011 Table 3-18	AASHTO 2011 Table 3-18
Vertical							
Terrain classification	Level	Level	Level	Level	Level	Level	Level
Maximum Grade (%)	3	3	6	6	6	6	4
Minimum Grade (%)	0.30	0.30	0.30	0.30	0.30	0.30	0.30
Minimum Rate of Vertical Curvature (Ksag – Design)	AASHTO 2011 Table 3-36	AASHTO 2011 Table 3-36	AASHTO 2011 Table 3-36	AASHTO 2011 Table 3-36	AASHTO 2011 Table 3-36	AASHTO 2011 Table 3-36	AASHTO 2011 Table 3-36
Minimum Rate of Vertical Curvature (Kcrest – Design)	AASHTO 2011 Table 3-34	AASHTO 2011 Table 3-34	AASHTO 2011 Table 3-34	AASHTO 2011 Table 3-34	AASHTO 2011 Table 3-34	AASHTO 2011 Table 3-34	AASHTO 2011 Table 3-34
Minimum Length of Vertical Curve (feet)	3 x Design Speed	3 x Design Speed	3 x Design Speed	3 x Design Speed	3 x Design Speed	3 x Design Speed	3 x Design Speed
Minimum Vertical Clearance - New Roadway Structures	16 feet-6 inches	16 feet-6 inches	16 feet-6 inches	16 feet-6 inches	16 feet-6 inches	16 feet-6 inches	16 feet-6 inches

Notes:

[1] Managed Lanes HOV Direct Connector between station “MC” 831+45 to “MC” 899+00 from the RID Reference Design Documents.
[2] “EN”, “MLK-515” and “MLK-NB15” ramp design speed shall be 60/50/30.
[3] “EN”, “MLK-515” and “MLK-NB15” shall use AASHTO 2011 Table 3-9.
[4] “CH-GC” shall use AASHTO Table 3-13b.

AASHTO = American Association of State Highway and Transportation Officials
DS = design speed
mph = miles per hour

DESIGN STANDARDS	DESIGN CRITERIA - FREEWAY SYSTEM						
	INTERSTATE	MANAGED LANES – HOV	MANAGE LANES – HOV DIRECT CONNECTOR[1]	MANAGED DROP RAMP – HOV	RAMP	SYSTEM CONNECTOR	COLLECTOR DISTRIBUTOR
Intersections							
Signalization	--------	--------	--------	Yes	Yes[2]	--------	--------
Design Vehicle (Inside Lane/Outside Lane)	--------	--------	--------	SU/A-BUS	SU/WB-65		
Right Turn Radius	--------	--------	--------	25'	25'	--------	--------
Pedestrian Access	--------	--------	--------	No	No	--------	--------
Bike Facility	--------	--------	--------	No	No	--------	--------
Ramp Metering	--------	--------	--------	--------	Yes[3]	--------	--------
CROSS SECTION							
Travel Lanes							
Minimum Number of Lanes	Varies	Varies	2	1	Varies	Varies	Varies
Minimum Lane Width (feet)	12	12	12	12	12	12	12
Turn Lanes							
Minimum No. of Lanes	--------	--------	--------	2LT/1RT	1RT	--------	--------
Minimum Lane Width (feet)	--------	--------	--------	12	12	--------	--------
Shoulders							
Minimum Shoulder Width – Left/Inside (feet)	10	4	4	4	4	4	4
Minimum Shoulder Width – Right/Outside (feet)	12	0-foot Buffer	8	8	8	8	8
			`				
Cross Slope							
Normal Crown (%)	2	2	2	2	2	2	2
Minimum Roadbed Widening (feet) for Fill Slopes 3:1 or Steeper	5	5	5	5	5	5	5
Graded Roadway Slopes							
Depth of Cut – Back Slope Ratio (feet/ratio) Height of Fill – Slope Ratio (feet/ratio)	NDOT Road Design Guide Section 2.20, Table 2.20	NDOT Road Design Guide Section 2.20, Table 2.20	NDOT Road Design Guide Section 2.20, Table 2.20	NDOT Road Design Guide Section 2.20, Table 2.20	NDOT Road Design Guide Section 2.20, Table 2.20	NDOT Road Design Guide Section 2.20, Table 2.20	NDOT Road Design Guide Section 2.20, Table 2.20
Concrete Barrier Rail							
Lateral Offset (Beyond Normal Edge of Shoulder) (feet)	Standard Drawings R-8.6.1	Standard Drawings R-8.6.1	Standard Drawings R-8.6.1	Standard Drawings R-8.6.1	Standard Drawings R-8.6.1	Standard Drawings R-8.6.1	Standard Drawings R-8.6.1
Widening for Barrier Rail (ft)	Standard Drawings R-8.6.1	Standard Drawings R-8.6.1	Standard Drawings R-8.6.1	Standard Drawings R-8.6.1	Standard Drawings R-8.6.1	Standard Drawings R-8.6.1	Standard Drawings R-8.6.1
Roadside Safety							
Minimum Clear Zone Distance (feet)	AASHTO Roadside Design Guide Table 3.1	AASHTO Roadside Design Guide Table 3.1	AASHTO Roadside Design Guide Table 3.1	AASHTO Roadside Design Guide Table 3.1	AASHTO Roadside Design Guide Table 3.1	AASHTO Roadside Design Guide Table 3.1	AASHTO Roadside Design Guide Table 3.1

Notes:

[1] Managed Lanes HOV Direct Connector between station “MC” 847+00 to “MC” 865+00 from the RID Reference Design Documents.
[2] See Section 15 of the Technical Provisions for Signalized intersection locations.
[3] See Section 9 of the Technical Provisions for Ramp Metering Locations.
[4] See Section 9.3.3 (*High-Occupancy Vehicle Lanes*) for the minimum horizontal clearance width requirements between barriers. The minimum shoulder widths listed above for the Manage Lanes – HOV Direct Connector can be switched from left to right for sight distance requirements.

AASHTO = American Association of State Highway and Transportation Officials

ATTACHMENT 09-2
ARTERIALS, COLLECTORS, AND LOCAL STREETS DESIGN CRITERIA

This page intentionally left blank.

ATTACHMENT 09-2

Design Standards	Design Criteria – Arterials, Collectors, and Local Streets																			
	SR 159 Charleston Boulevard	Martin Luther King Blvd (Oakey to Pinto)	Martin Luther King (Pinto to North of Alta)	Grand Central Parkway (Iron Horse Loop to Western)	Grand Central Parkway/Industrial Connector (Western to Wyoming)	Alta Drive	Oakey Boulevard	Western Avenue	Iron Horse Drive	Martin Luther King to Charleston Slip Ramp	Ellis Avenue	Hastings Avenue	Pinto Lane	Charmast Lane	Wall Street	Beardon Drive	Desert Lane	Silver Avenue	Symphony Park Avenue	Neon Gateway
Functional Classification	Principal Urban Arterial	Minor Urban Arterial	Minor Urban Arterial	Minor Urban Arterial	Minor Urban Arterial	Minor Urban Arterial	Minor Urban Arterial	Minor Urban Arterial	Urban Collector	Urban Collector	Urban Collector	Urban Collector	Urban Collector	Urban Collector	Urban Collector	Urban Collector	Urban Collector	Urban Collector	Minor Urban Arterial	Urban Collector
Ownership	NDOT	City of Las Vegas	City of Las Vegas	City of Las Vegas	City of Las Vegas	City of Las Vegas	City of Las Vegas	City of Las Vegas	City of Las Vegas	City of Las Vegas	City of Las Vegas	City of Las Vegas	City of Las Vegas	City of Las Vegas	City of Las Vegas	City of Las Vegas	City of Las Vegas	City of Las Vegas	City of Las Vegas	NDOT
Design Speed (mph)	45	45	45	35	35	40	40	25	30	35	30	30	30	30	30	30	30	30	40	35
Posted Speed (mph)	35	35	35	35	35	35	35	25	25	30	25	25	25	25	25	25	25	25	35	25
Design Vehicle	WB-62	WB-62	WB-62	WB-62	WB-62	WB-62	WB-62	WB-62	WB-62	WB-62	WB-62	WB-62	WB-62	WB-62	WB-62	WB-62	WB-62	WB-62	WB-62	ABUS
Stopping Sight Distance (feet)	360	360	360	250	250	305	305	360	300	250	300	300	300	300	300	300	300	300	305	250
Geometry																				
Horizontal																				
Minimum Horizontal Radius Curve (feet)	1039	1039	1039	510	510	762	762	148	Match Existing	510	333	333	333	333	333	333	333	333	762	510
Maximum Superelevation – Emax (%)	N/C	N/C	N/C	N/C	N/C	N/C	N/C	N/C	6	N/C	N/C	N/C	N/C	N/C	N/C	N/C	N/C	N/C	N/C	N/C
Vertical																				
Maximum Grade (%) – Maximum	7	6	6	6	6	7	7	6	9	9	9	9	9	9	9	9	9	9	7	6
Minimum Grade (%) – Minimum	0.4	0.4	0.4	0.4	0.4	0.4	0.4	0.4	0.4	0.4	0.4	0.4	0.4	0.4	0.4	0.4	0.4	0.4	0.4	0.5
Rate of Vertical Curvature (Ksag – Design)	79	79	79	49	49	64	64	79	37	49	37	37	37	37	37	37	37	37	64	4.9
Rate of Vertical Curvature (Kcrest – Design)	61	61	61	29	29	44	44	61	19	29	19	19	19	19	19	19	19	19	44	29
Minimum Length of Vertical Curve (feet) - Minimum	135	135	135	105	105	120	120	135	90	105	90	90	90	90	90	90	90	90	120	105
Vertical Clearance – New Roadway Structures	16'-6"	16'-6"	16'-6"	16'-6"	(Note 7)	16'-6"	16'-6"	16'-6"	16'-6"	16'-6"	16'-6"	16'-6"	16'-6"	16'-6"	16'-6"	16'-6"	16'-6"	16'-6"	16'-6"	16'-6"

ATTACHMENT 09-2

Design Standards	Design Criteria – Arterials, Collectors, and Local Streets																			
	SR 159 Charleston Boulevard	Martin Luther King Blvd (Oakey to Pinto)	Martin Luther King (Pinto to North of Alta)	Grand Central Parkway (Iron Horse Loop to Western)	Grand Central Parkway/Industrial Connector (Western to Wyoming)	Alta Drive	Oakey Boulevard	Western Avenue	Iron Horse Drive	Martin Luther King to Charleston Slip Ramp	Ellis Avenue	Hastings Avenue	Pinto Lane	Charmast Lane	Wall Street	Beardon Drive	Desert Lane	Silver Avenue	Symphony Park Avenue	Neon Gateway
Design Vehicle (Inside Lane/Outside Lane)	SU/WB-50	SU/WB-50	SU/WB-50	SU/WB-50	SU/WB-50	SU/WB-50	SU/WB-50	SU/WB-50	SU/WB-50	___	___	___	___	___	___	___	___	___	SU/WB-50	ABUS
Pedestrian Access	Yes	Yes	Yes	Yes	Yes	Yes	Yes	Yes	No	Yes	Yes	Yes	Yes	Yes	Yes	Yes	Yes	Yes	Yes	No
Bike Facility	No	Yes	Yes	No	No	Yes	Yes	Yes	No	No	Yes	Yes	Yes	Yes	Yes	Yes	Yes	Yes	Yes	No
Cross-Section																				
Number of Through Lanes – Each Direction (See Note 8)	3	___	___	___	___	___	___	___	___	___	___	___	___	___	___	___	___	___	___	Varies
Travel Lane Width (feet) – Minimum	11	11	11	11	11	10	11	10.5	12	11	12	12	12	12	12	12	12	12	10	12
Turn Lane Width (feet) – Minimum	10	10	10	10	10	10	10	10	10	10	10	10	10	10	10	10	10	10	10	12
Bike Lane (LT/RT)	No/No	Yes/Yes	Yes/Yes Ellis to Alta Only	Yes/Yes Charleston to Western only	Yes/Yes	Yes/Yes	Yes/Yes	No/No	No/No	No/No	No/No	No/No	No/No	No/No	No/No	No/No	No/No	No/No	No/No	No/No
Bike Lane Width (feet) – Minimum	--------	5	5	--------	5	4	4	___	___	___	___	___	___	___	___	___	___	___	___	___
Shared Use Lane Width (feet) – Minimum	14	___	___	___	___	___	___	16	___	19	14	14	14	14	14	14	14	14	14	___
Cross Slope																				
Normal Crown (%)	2	2	2	2	2	2	2	2	Match Existing	2	2	2	2	2	2	2	2	2	2	2
Concrete Barrier Rail																				
Lateral Offset from Vehicular Lane to Face of Barrier(feet) – Minimum	2	2	2	2	2	2	2	2	2	2	2	2	2	2	2	2	2	2	2	2
Median																				
Width (feet) Minimum	4	4	4	4	4	4	2	4	4	___	___	___	2	___	___	___	4	___	4	4
Sidewalk																				

ATTACHMENT 09-2

Design Standards	Design Criteria – Arterials, Collectors, and Local Streets																			
	SR 159 Charleston Boulevard	Martin Luther King Blvd (Oakey to Pinto)	Martin Luther King (Pinto to North of Alta)	Grand Central Parkway (Iron Horse Loop to Western)	Grand Central Parkway/Industrial Connector (Western to Wyoming)	Alta Drive	Oakey Boulevard	Western Avenue	Iron Horse Drive	Martin Luther King to Charleston Slip Ramp	Ellis Avenue	Hastings Avenue	Pinto Lane	Charmast Lane	Wall Street	Beardon Drive	Desert Lane	Silver Avenue	Symphony Park Avenue	Neon Gateway
Sidewalk (LT/RT)	Yes/Yes	Yes/Yes	Yes/Yes	Yes/Yes	Yes/Yes	Yes/Yes	Yes/Yes	Yes/Yes	No/Yes	Yes/No	Yes/Yes	Yes/Yes	Yes/Yes	Yes/Yes	Yes/No	Yes/Yes	Yes/Yes	Yes/Yes	Yes/Yes	No/No
Width (feet) – Minimum (Note 5)	5	10	5	5	5	5 (Note3)	5	5	5	10	5	5	5	5	5	5	5	5	5	___
Amenity strip -5-foot park strip with 10-foot Minimum Sidewalk (LT/RT)	Yes/Yes (Note 2)	Yes/No	Yes/No	Yes/Yes (Charleston to Iron Horse Loop Only)	Yes/Yes	No/No	No/No	No/No	No/No	Yes/No	No/No	No/No	No/No	No/No	No/No	No/No	No/No	No/No	No/No	No/No
Cut and Fill Slopes																				
Depth of Cut – Back Slope Ratio (feet/ratio) (horizontal/vertical)	4:1	4:1	4:1	2:1	2:1	4:1	4:1	4:1	4:1	4:1	4:1	4:1	4:1	4:1	4:1	4:1	4:1	4:1	4:1	4:1
Height of Fill – Slope Ratio (feet/ratio) (horizontal/vertical)	4:1	4:1	4:1	2:1	2:1	4:1	4:1	4:1	4:1	4:1	4:1	4:1	4:1	4:1	4:1	4:1	4:1	4:1	4:1	4:1
Roadside Safety																				
Clear Zone Distance (feet) – Minimum	BOW or CZ	BOW or CZ	BOW or CZ	BOW or CZ	BOW or CZ	BOW or CZ	BOW or CZ	BOW or CZ	BOW or CZ	BOW or CZ	BOW or CZ	BOW or CZ	BOW or CZ	BOW or CZ	BOW or CZ	BOW or CZ	BOW or CZ	BOW or CZ	BOW or CZ	BOW or CZ	___
Lateral Clearance with Curb and Gutter (feet) – Minimum	6	6	6	6	6	6	6	6	6	6	6	6	6	6	6	6	6	6	6	___

Notes:

1. SR 589 Sahara Avenue and SR 599 Rancho Avenue shall meet standards for Principle Urban Arterial and be similar to Design Criteria for Charleston Boulevard.
2. City amenity required on the north side of Charleston Blvd. starting a minimum of 320 feet on the west side of the University of Nevada-Las Vegas (UNLV) Parking lot to the intersection with Grand Central Parkway and on the south side from the intersection with the SB I-15 on-ramp to the intersection with Grand Central Parkway.
3. 10-foot minimum sidewalk required under I-15 Bridge on both sides of Alta Drive.
4. Western Avenue is from the intersection with Oakey Blvd. to the intersection with Grand Central Parkway, Grand Central Parkway is from the intersection with Western Ave. to the north to Iron Horse Loop. Grand Central Parkway/Industrial Connector is from Grand Central Parkway and Western intersection to Industrial and Wyoming intersection.
5. 2-foot minimum lateral offset required to walls, barrier rail, piers, guardrail and building.
6. Transition lengths to match existing roadway widths shall be a minimum of a 25:1 taper rate.
7. Minimum clearance as required in accordance with *BNSF Railway – Union Pacific Railroad, Guidelines for Railroad Grade Separation Projects* and AREMA requirements.
8. If not listed, the minimum number of lanes is as set forth in Section 9.3.4 (*Local Infrastructure*) of the Technical Provisions. The number of lanes for Neon Gateway is as set forth in Section 9.3.3 (*High-Occupancy Vehicle Lanes*)

LT = left turn; mph = miles per hour; NB = northbound; RT = right turn; SB = southbound

This page intentionally left blank.

ATTACHMENT 09-2						
DESIGN STANDARDS	FUTURE IMPROVEMENT PHASES DESIGN CRITERIA – ARTERIALS, COLLECTORS, AND LOCAL STREETS					
	ALTA DRIVE	OAKEY BOULEVARD	WESTERN AVENUE	RANCHO DRIVE	WESTWOOD DRIVE	HIGHLAND AVENUE
Functional Classification	Minor Urban Arterial	Minor Urban Arterial	Minor Urban Arterial	Minor Urban Arterial	Urban Collector	Urban Collector
Ownership	City	City	City	City	City	City
Design Speed (mph)	40	35	25	25	20	20
Posted Speed (mph)	35	35	25	25	20	20
Design Vehicle	SU/WB-62	SU/WB-62	SU/WB-62	SU	SU	SU
Stopping Sight Distance (feet)	305	250	155	155	115	115
GEOMETRY						
Horizontal						
Minimum Horizontal Radius Curve (feet)	762	510	198	198	107	107
Maximum Superelevation - Emax (%)	N/C	N/C	N/C	N/C	N/C	N/C
Vertical						
Maximum Grade (%) - Maximum	7	7	6	9	9	9
Minimum Grade (%) - Minimum	0.4	0.4	0.4	0.4	0.4	0.4
Rate of Vertical Curvature (Ksag - Design)	64	49	26	26	17	17
Rate of Vertical Curvature (Kcrest - Design)	44	29	12	12	7	7
Minimum Length of Vertical Curve (feet) - Minimum	120	105	100	100	100	100
Vertical Clearance - New Roadway Structures	16'-6"	16'-6"	16'-6"	16'-6"	16'-6"	16'-6"

ATTACHMENT 09-2						
DESIGN STANDARDS	FUTURE IMPROVEMENT PHASES DESIGN CRITERIA – ARTERIALS, COLLECTORS, AND LOCAL STREETS					
	ALTA DRIVE	OAKEY BOULEVARD	WESTERN AVENUE	RANCHO DRIVE	WESTWOOD DRIVE	HIGHLAND AVENUE
Design Vehicle (Inside Lane/Outside Lane)	SU/WB-50	SU/WB-62	SU/WB-62	SU	SU	SU
Pedestrian Access	YES	YES	YES	YES	YES	YES
Bike Facility	YES	YES	YES	NO	NO	NO
CROSS-SECTION						
No. of Thru Lanes –Each Direction	3	2	2	1	1	1
Travel Lane Width (feet) -Minimum	10	11	11	11	11	11
Turn Lane Width (feet)- Minimum	10	10	10	10	10	10
Bike Lane (LT/RT)	YES/YES	YES/YES	YES/YES	NO/NO	NO/NO	NO/NO
Bike Lane Width (feet)-Minimum	4	4	4	N/A	N/A	N/A
Shared Use Lane Width (feet) - Minimum	___	___	___	___	___	___
Cross-Slope						
Normal Crown (%)	2	2	2	2	2	2
Concrete Barrier Rail						
Lateral Offset from Vehicular Lane to Face of Barrier(feet)-Minimum	2	2	2	2	2	2
Median						
Width (feet) Minimum	2	2	3	N/A	N/A	N/A
Sidewalk						
Sidewalk (LT/RT)	YES/YES	YES/YES	YES/YES	YES/NO	YES/NO	NO/YES

ATTACHMENT 09-2

DESIGN STANDARDS	FUTURE IMPROVEMENT PHASES DESIGN CRITERIA – ARTERIALS, COLLECTORS, AND LOCAL STREETS					
	ALTA DRIVE	OAKEY BOULEVARD	WESTERN AVENUE	RANCHO DRIVE	WESTWOOD DRIVE	HIGHLAND AVENUE
Width (feet) – Minimum (Note 3)	5	5	10 (Note 1)	5	5	5
Amenity strip -5' park strip with 10' Minimum Sidewalk (LT/RT)	NO/NO	NO/NO	YES/YES (Note 2)	NO/NO	NO/NO	NO/NO
Cut and Fill Slopes						
Depth of Cut - Back Slope Ratio (feet/ratio) (horiz./vert.)	4:1	2:1	2:1	2:1	4:1	4:1
Height of Fill - Slope Ratio (feet/ratio) (horiz./vert.)	4:1	2:1	2:1	2:1	4:1	4:1
Roadside Safety						
Clear Zone Distance (feet) - Minimum	BOW or CZ	BOW or CZ	BOW or CZ	BOW or CZ	BOW or CZ	BOW or CZ
Lateral Clearance with Curb and Gutter (feet)- Minimum	6	6	6	2	2	2

NOTES

1. 5-foot minimum sidewalk required between Highland Ave and Oakey Blvd.
2. Along Western Avenue between Oakey Blvd and Grand Central Parkway.
3. 2-foot minimum lateral offset required to walls, barrier rails, piers, guardrails, and buildings.

This page intentionally left blank.

ATTACHMENT 09-3
DESIGN EXCEPTIONS AND DEVIATIONS

This page intentionally left blank.

Attachment 09-3		
Design Exceptions		
Location:	**Description:**	**Lane Width**
I-15 Mainline NB “MN” 745+08 to “MN” 765+83 Length: 2,075 feet	Minimum width for the three left-side general-purpose lanes may be reduced to 11 feet for the initial build. A 12-foot minimum lane width shall be provided for the I-15 Freeway Future Improvements.	
I-15 Mainline NB “MN” 749+81 to “MN” 765+83 Length: 1,602 feet	Minimum width for the two right-side lanes (general-purpose and auxiliary lanes) may be reduced to 11 feet for the initial build. A 12-foot minimum lane width shall be provided for the I-15 Freeway Future Improvements.	
Sahara Avenue NB Entrance “SA2” 746+00 to “SA2” 750+15 Length: 415 feet	Minimum width for lanes may be reduced to 11 feet for the initial build. A 12-foot minimum lane width shall be provided for the I-15 Freeway Future Improvements.	
US 95 WB “L” 1134+30 to “L” 1200+72 Length: 6,642 feet	Minimum width for the three left-side general-purpose lanes may be reduced to 11 feet.	
US 95 EB “L” 1134+00 to “L” 1194+80 Length: 6,080 feet	Minimum width for the three left-side general-purpose lanes may be reduced to 11 feet.	
Location:	**Description:**	**Shoulder Width**
I-15 Mainline SB “MS” 728+68 to “MS” 743+75 Length: 1,507 feet	Minimum width for the right-side shoulder may be reduced to provide a width of 8 to 4 feet. 728+68 to 742+81 – 4-foot shoulder 742+81 to 743+75 – 4-foot to 8-foot shoulder transition	
I-15 Mainline SB “MS” 850+65 to “MS” 853+62 Length: 297 feet	Minimum width for the right-side shoulder may be reduced to provide a width of 8 to 2 feet. 850+65 to 852+89 – 8-foot to 2-foot shoulder transition 852+89 to 853+62 – 2-foot to 4-foot shoulder transition	
I-15 Mainline NB “MN” 731+25 to “MN” 745+30 Length: 1,405 feet	Minimum width for the right-side shoulder may be reduced to provide a width of 8 to 4 feet. 731+25 to 734+00 -– 8-foot' to 4-foot' shoulder transition 734+00 to 741+08 -– 4-foot' shoulder 741+08 to 741+28 -– 4-foot' to 6-foot' shoulder transition 741+28 to 745+30 -– 6-foot' shoulder	
I-15 Mainline NB Various Spot Locations	Minimum width for the left-side shoulder may be reduced to provide a width of 4 to 2 feet at locations where overhead sign foundations, bridge columns, and light foundations are located.	
I-15 Mainline SB Various Spot Locations	Minimum width for the left-side shoulder may be reduced to provide a width of 4 to 2 feet at locations where overhead sign foundations, bridge columns, and light foundations are located.	

Attachment 09-3	
Design Exceptions	
I-15 NB to WB I-515 Connector "NE" 848+44 to "NE" 849+68 Length: 124 feet	Minimum width for the right-side shoulder may be reduced to provide a width of 6 to 3 feet. 848+44 to 849+08 – 6-foot to 3-foot shoulder transition 849+08 to 849+36 – 3-foot shoulder 849+36 to 849+68 – 3-foot to 6-foot shoulder transition
US 95 EB "L" 1173+84 to "L" 1177+34 Length: 350 feet	Minimum width for the left-side shoulder may be reduced to provide a width of 4 to 2 feet.
US 95 EB "L" 1165+29 to "L" 1178+10 Length: 1,281 feet	Minimum width for the right-side shoulder may be reduced to provide a width of 8 to 4 feet. 1165+29 to 1167+60 – 8-foot to 4-foot shoulder transition 1167+60 to 1169+15 – 4-foot to 6-foot shoulder transition 1169+15 to 1172+00 – 6-foot to 5-foot shoulder transition 1172+00 to 1173+35 – 5-foot shoulder 1173+35 to 1178+10 – 5-foot to 6-foot shoulder transition
US 95 WB "L" 1175+29 to "L" 1178+41 Length: 312 feet	Minimum width for the left-side shoulder may be reduced to provide a width of 4 to 2 feet.
US 95 WB "L" 1157+32 to "L" 1162+55 Length: 523 feet	Minimum width for the right-side shoulder may be reduced to provide a width of 8 to 4 feet. 1157+32 to 1158+05 – 8-foot to 4-foot shoulder transition 1158+05 to 1158+30 – 4-foot to 7-foot shoulder transition 1158+30 to 1160+55 – 7-foot to 6-foot shoulder transition 1160+55 to 1161+21 – 8-foot to 4-foot shoulder transition 1161+21 to 1162+55 – 4-foot shoulder
US 95 WB "L" 1167+00 to "L" 1176+90 Length: 990 feet	Minimum width for the right-side shoulder may be reduced to provide a width of 8 to 4 feet. 1167+00 to 1168+81 – 8-foot to 4-foot shoulder transition 1168+81 to 1176+90 – 4-foot shoulder
US 95 WB "L" 1178+45 to "L" 1187+90 Length: 945 feet	Minimum width for the right-side shoulder may be reduced to provide a width of 8 to 4 feet. 1178+45 to 1186+05 – 4-foot shoulder 1186+05 to 1187+90 – 4-foot to 8-foot shoulder transition
Rancho Drive EB Entrance "RD-2" 73+10 to "RD-2" 75+96 286 feet'	Minimum width for the right-side shoulder may be reduced to provide a width of 6 to 4 feet. 73+10 to 73+49 – 4-foot to 6-foot shoulder 74+54 to 75+96 – 5-foot shoulder

Attachment 09-3		
Design Exceptions		
I-515 EB to SB I-15 Connector “MS” 851+99 to “MS” 853+75 Length: 176 feet	Minimum width for the right-side shoulder may be reduced to provide a width of 6 to 2 feet.	
MLK-515 Connector Ramp “MLK-515” 50+00 to “MLK-515” 59+80 Length: 980 feet	Minimum width for the right-side shoulder may be reduced to provide a width of 6 to 4 feet.	
MLK-515 Connector Ramp “MLK-515” 62+85 to “MLK-515” 69+05 Length: 620 feet	Minimum width for the right-side shoulder may be reduced to provide a width of 6 to 2 feet.	
“SA4” 721+73 to “SA4” 723+84 Length: 211 feet	Minimum width for the right-side shoulder may be reduced to provide a width of 6 to 5 feet.	
Location:	**Description:**	**Bridge Width**
I-15 Mainline SB “MS” 850+65 to “MS” 851+99 Length: 134 feet	Bridge width and minimum shoulder width for the right-side shoulder may be reduced to provide a width of 8 to 3 feet. 850+65 to 851+20 – 8-foot to 3-foot shoulder transition 851+20 to 851+99 – 3-foot shoulder	
I-15 NB to WB I-515 Connector “NE” 848+44 to “NE” 849+68 Length: 124 feet	Bridge width and minimum shoulder width for the right-side shoulder may be reduced to provide a width of 6 to 3 feet. 848+44 to 849+08 – 6-foot to 3-foot shoulder transition 849+08 to 849+36 – 3-foot shoulder	
Location:	**Description:**	**Horizontal Alignment**
I-15 Mainline NB “MN” 850+00 to “MN” 857+34 Length: 734 feet	The existing roadway horizontal curvature and superelevation rates may be used through these limits.	
I-15 Mainline NB “MN” 857+34 to “MN” 859+34 Length: 200 feet	The existing roadway horizontal curvature and superelevation rates may be used through these limits.	
I-15 Mainline SB “MS” 849+74 to “MS” 852+30 Length: 256 feet	The existing roadway horizontal curvature and superelevation rates may be used through these limits.	
Grand Central Slip Ramp “CH-GC” 804+93 to “CH-GC” 807+86 Length: 293 feet	Alignment centerline radius may be reduced to 156 feet with a maximum superelevation rate of 8%.	

Attachment 09-3		
Design Exceptions		
Location:	**Description:**	**Stopping Sight Distance**
HOV Direct Connector “MC” 846+50 to “MC” 866+00 Length: 1,950 feet	For the barrier sight distance obstruction, a minimum stopping sight distance of 316 feet may be used through this location for the left-side shoulder for the NB to WB direction of travel and for the right-side shoulder for the EB to SB direction of travel. For the NB to WB direction of travel the left and right shoulder widths have been exchanged to provide adequate shoulder widths for the sight distance requirements. The minimum left and right shoulder width criteria are met.	
MLK-515 Connector Ramp “MLK-515” 60+50 to “MLK-515” 63+30 Length: 280 feet	For the barrier sight distance obstruction, a minimum stopping sight distance of 183 feet may be used through this location for the left-side shoulder. Advisory speed warning signs for 25 mph shall be installed for the ramp.	
MLK-515 Connector Ramp “MLK-515” 64+30 to “MLK-515” 69+50 Length: 520 feet	For the barrier sight distance obstruction, a minimum stopping sight distance of 183 feet may be used through this location for the left-side shoulder. Advisory speed warning signs for 25 mph shall be installed for the ramp.	
US 95 Mainline EB “L” 1159+00 to “L” 1175+70 Length: 1,670 feet	For the barrier sight distance obstruction, a minimum stopping sight distance of 536 feet may be used through this location for the left-side shoulder.	
Rancho Drive EB Entrance “RD-2” 71+40 to 73+20 Length: 180 feet	For the barrier and bridge column sight distance obstruction, a minimum stopping sight distance of 377 feet may be used through this location for the right-side shoulder.	
Location:	**Description:**	**Superelevation**
I-15 Mainline NB “MN” 850+00 to “MN” 857+34 Length: 734 feet	The existing roadway horizontal curvature and superelevation rates may be used through these limits.	
I-15 Mainline NB “MN” 857+34 to “MN” 859+34 Length: 200 feet	The existing roadway horizontal curvature and superelevation rates may be used through these limits.	
I-15 Mainline SB “MS” 849+74 to “MS” 852+30 Length: 293 feet	The existing roadway horizontal curvature and superelevation rates may be used through these limits.	
Grand Central Exit “CH-CG” 804+93 to “CH-CG” 807+86 Length: 293 feet	The minimum radii used for design shall be measured from the inner edge of the traveled way. Horizontal curvature and superelevation rates shall provide for a minimum of a 25-mph design speed for a design superelevation rate e_{max} = 6%. Advisory speed warning signs shall be installed for the ramp.	
MLK-515 Connector Ramp “MLK-515” 60+13 to “MLK-515” 60+93 Length: 80 feet	The superelevation transition length for this location may be a minimum of 79 feet.	

Attachment 09-3		
Design Exceptions		
Location:	**Description:**	**High-Occupancy Vehicle (HOV) Buffer Width**
I-15 HOV Southbound “MS” 714+00 to “MS”763+00	The buffer width between HOV lanes and I-15 general-purpose lanes may be reduced to 0 foot for the initial build.	
I-15 HOV Northbound “MN” 739+00 to “MN”760+00	The buffer width between HOV lanes and I-15 general-purpose lanes may be reduced to 0 foot for the initial build.	
Notes: Station limits are derived from the Reference Information Documents (RIDs) and are approximate.		

Attachment 09-3	
Deviations	
Location:	**Description: Lane Width**
Alta Drive “AL” 26+15 to “AL” 30+75 Length: 460’	Minimum width for left-outside general purpose lanes may be reduced to10 feet for the initial build. A 12-foot minimum lane width shall be provided for the Future Improvements.
Alta Drive “AL” 28+19 to “AL” 38+03 Length: 984’	Minimum width for left-outside general purpose lanes may be reduced to10 feet for the initial build. A 12-foot minimum lane width shall be provided for the Future Improvements.
Alta Drive “AL” 66+77 to “AL” 72+20 Length: 543’	Minimum width for left-outside general purpose lanes may be reduced to10 feet for the initial build. A 12-foot minimum lane width shall be provided for the Future Improvements.
Charleston Blvd “CH” 34+60 to “CH” 36+00 Length: 140’	Transition lane widths from 11 feet to match existing.
Charleston Blvd “CH-RT” 45+60 to “CH-RT” 46+00 Length: 140’	Transition lane widths from 11 feet to match existing.
Location:	**Description: Urban Trails (10' Sidewalk with 5' Amenity Zone)**
Charleston Blvd “CH” 31+14 to “CH” 35+30 Length: 416’	Minimum width for left-side amenity zone may be reduced to 0 feet. Minimum width for left-side sidewalk may be reduced to 5 feet.
Charleston Blvd “CH” 30+95 to “CH” 34+82 Length: 387’	Minimum width for right-side amenity zone may be reduced to 0 feet. Minimum width for right-side sidewalk may be reduced to 5 feet.
Charleston Blvd “CH” 31+58 to “CH” 36+12 Charleston Blvd “CH-RT” 45+86.79 to end MLK Blvd “MLK” 20+89 to “MLK” 22+99 Length: 210’	Minimum general purpose lanes may be reduced less than 11.0 feet to match into existing general purpose lanes at UPRR crossing. Minimum k-value may be reduced to match into existing at UPRR crossing. Minimum width for left-side amenity zone may be reduced to 0 feet.
MLK Blvd “MLK” 47+87 to “MLK” 50+27 Length: 240’	Minimum width for left-side amenity zone may be reduced to 0 feet.
MLK Blvd “MLK” 62+77 to “MLK” 64+22 Length: 145’	Minimum width for left-side amenity zone may be reduced to 0 feet.
MLK Blvd “MLK” 49+83 to “MLK” 51+51 Length: 168’	Minimum width for right-side amenity zone may be reduced to 0 feet.

Attachment 09-3	
Deviations	
MLK Blvd “MLK” 70+84 to “MLK” 72+08 Length: 124’	Minimum width for right-side amenity zone may be reduced to 0 feet.
Grand Central Parkway “GC” 41+26 to “GC” 42+36 Length: 110’	Minimum width for left-side amenity zone may be reduced to 0 feet for the initial build. A 5-foot minimum amenity zone shall be provided for the Future Improvements. Minimum width for left-side sidewalk may be reduced to 5 feet for the initial build. A 10-foot minimum sidewalk and a 5-foot Amenity Zone shall be provided for the Future Improvements.
Grand Central Parkway “GC” 33+68 to “GC” 34+09 Length: 41’	Minimum width for left-side sidewalk may be reduced to 5 feet for the initial build. A 10-foot minimum sidewalk and a 5-foot Amenity Zone shall be provided for the Future Improvements.
Grand Central Parkway “GC” 41+22 to “GC” 44+52 Length: 330’	Minimum width for right-side amenity zone may be reduced to 0 feet for the initial build. A 5-foot minimum amenity zone shall be provided for the Future Improvements. Minimum width for right-side sidewalk may be reduced to 5 feet for the initial build. A 10-foot minimum sidewalk and a 5-foot Amenity Zone shall be provided for the Future Improvements.
Western Blvd “W” 38+91 to “W” 43+58 Length: 467’	Minimum width for left-side amenity zone may be reduced to 0 feet for the initial build. A 5-foot minimum amenity zone shall be provided for the Future Improvements. Minimum width for left-side sidewalk may be reduced to 5 feet for the initial build. A 10-foot minimum sidewalk and a 5-foot Amenity Zone shall be provided for the Future Improvements.
Western Blvd “W” 39+21 to “W” 43+02 Length: 381’	Minimum width for right-side amenity zone may be reduced to 0 feet for the initial build. A 5-foot minimum amenity zone shall be provided for the Future Improvements. Minimum width for right-side sidewalk may be reduced to 5 feet for the initial build. A 10-foot minimum sidewalk and a 5-foot Amenity Zone shall be provided for the Future Improvements.
Bearden Dr “B” 11+19 to “B” 13+99 Length: 280’	Minimum width for left-side amenity zone may be reduced to 0 feet. Minimum width for left-side sidewalk may be reduced to 5 feet.
Bearden Dr “B” 10+00 to “B” 14+30 Length: 430’	Minimum width for right-side amenity zone may be reduced to 0 feet. Minimum width for right-side sidewalk may be reduced to 5 feet.
Desert Ln “DL” 10+08 to “DL” 10+93 Length: 85’	Minimum width for left-side amenity zone may be reduced to 0 feet. Minimum width for left-side sidewalk may be reduced to 5 feet.
Desert Ln “DL” 10+45 to “DL” 10+81 Length: 36’	Minimum width for right-side amenity zone may be reduced to 0 feet. Minimum width for right-side sidewalk may be reduced to 5 feet.

Attachment 09-3	
Deviations	
Hastings Ave “H” 13+25 to “H” 13+65 Length: 40’	Minimum width for left-side amenity zone may be reduced to 0 feet. Minimum width for left-side sidewalk may be reduced to 5 feet.
Hastings Ave “H” 13+25 to “H” 13+43 Length: 18’	Minimum width for right-side amenity zone may be reduced to 0 feet. Minimum width for right-side sidewalk may be reduced to 5 feet.
Oakey Blvd “OW” 11+64 to “OW” 13+75 Length: 211’	Minimum width for left-side amenity zone may be reduced to 0 feet. Minimum width for left-side sidewalk may be reduced to 5 feet.
Oakey Blvd “OW” 15+94 to “OW” 24+85 Length: 891’	Minimum width for left-side amenity zone may be reduced to 0 feet. Minimum width for left-side sidewalk may be reduced to 5 feet.
Alta Dr “AL” 41+20 to “AL” 42+20 Length: 100’	Minimum width for left-side amenity zone may be reduced to 0 feet. Minimum width for left-side sidewalk may be reduced to 5 feet.
Alta Dr “AL” 45+24 to “AL” 48+60 Length: 336’	Minimum width for left-side amenity zone may be reduced to 0 feet. Minimum width for left-side sidewalk may be reduced to 5 feet.
Alta Dr “AL” 49+50 to “AL” 50+61 Length: 111’	Minimum width for left-side amenity zone may be reduced to 0 feet. Minimum width for left-side sidewalk may be reduced to 5 feet.
Alta Dr “AL” 41+51 to “AL” 42+67 Length: 116’	Minimum width for right-side amenity zone may be reduced to 0 feet. Minimum width for right-side sidewalk may be reduced to 5 feet.
Alta Dr “AL” 45+11 to “AL” 48+29 Length: 318’	Minimum width for right-side amenity zone may be reduced to 0 feet. Minimum width for right-side sidewalk may be reduced to 5 feet.
World Market Driveway “WM” 10+70 to “WM” 12+68 Length: 198’	Minimum width for right-side amenity zone may be reduced to 0 feet. Minimum width for right-side sidewalk may be reduced to 5 feet.

ATTACHMENT 09-4
BRIDGE REPLACEMENTS I-937, I-938, G-941, AND I-945

This page intentionally left blank.

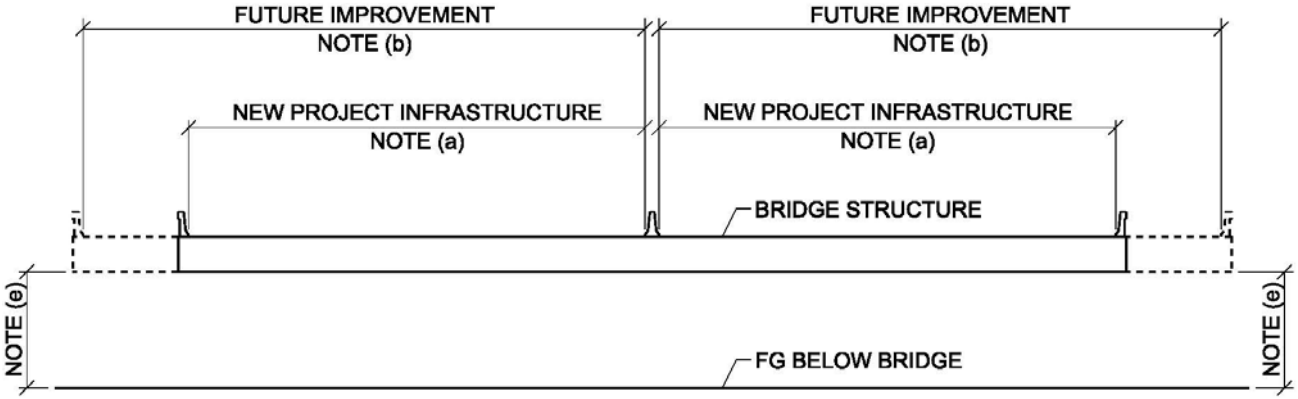

FACILITY CARRIED ON STRUCTURE

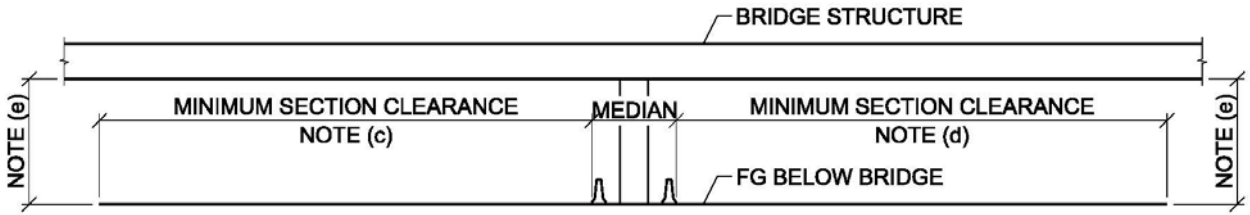

FACILITY UNDER STRUCTURE

Bridge No I-937
Note (a). Design-Builder's bridge replacement shall provide for the New Project Infrastructure for southbound I-15 in accordance with the Project Standards and these Technical Provisions.
Note (a) Design-Builder's bridge replacement shall provide for the New Project Infrastructure for northbound I-15 in accordance with the Project Standards and these Technical Provisions.
Note (b). Southbound I-15, Design-Builder's bridge design and configuration shall be compatible with future improvements providing for four general purpose lanes, and one HOV lane including shoulders, buffers, barrier, medians, and other features in accordance with the Project Standards and as defined in these Technical Provisions. Northbound I-15, Design-Builder's bridge design and configuration shall be compatible with future improvements providing for four general purpose lanes, one auxiliary lane, and one HOV lane including shoulders, buffers, barrier, medians, and other features in accordance with the Project Standards and as defined in these Technical Provisions.
Note (c). Eastbound US95, Design-Builder's bridge replacement shall provide a minimum section clearance width to provide for the Existing Project Infrastructure and for future improvements providing for three general purpose lanes, one auxiliary lane, and one HOV lane including shoulders, buffers, barrier, medians, and other features in accordance with the Project Standards and as defined in these Technical Provisions.
Note (d). Westbound US95, Design-Builder's bridge replacement shall provide a minimum section clearance width to provide for the Existing Project Infrastructure and for future improvements providing for three general purpose lanes, one auxiliary lane, one HOV lane, and one ramp lane including shoulders, buffers, barrier, medians, and other features in accordance with the Project Standards and as defined in these Technical Provisions.
Note (e). Design-Builder's bridge design and configuration shall provide minimum vertical clearance in accordance with the Project Standards compatible with the future improvements.

Bridge No I-938
Note (a). Design-Builder's bridge replacement shall provide for the New Project Infrastructure for southbound I-15 in accordance with the Project Standards and these Technical Provisions.
Note (a). Design-Builder's bridge replacement shall provide for the New Project Infrastructure for northbound I-15 in accordance with the Project Standards and these Technical Provisions.
Note (b). Southbound I-15, Design-Builder's bridge design and configuration shall be compatible with future improvements providing for four general purpose lanes, and one HOV lane including shoulders, buffers, barrier, medians, and other features in accordance with the Project Standards and as defined in these Technical Provisions. Northbound I-15, Design-Builder's bridge design and configuration shall be compatible with future improvements providing for four general purpose lanes, one auxiliary lane, and one HOV lane including shoulders, buffers, barrier, medians, and other features in accordance with the Project Standards and as defined in these Technical Provisions.
Note (c). Design-Builder's bridge replacement shall provide a minimum section clearance width to provide for the Existing Project Infrastructure including one ramp lane, shoulders, buffers, barrier, medians, and other features in accordance with the Project Standards and as defined in these Technical Provisions. Width to provide for horizontal sight distance criteria shall be included in the minimum section width.

Bridge No I-938
Note (e). Design-Builder's bridge design and configuration shall provide minimum vertical clearance in accordance with the Project Standards compatible with the future improvements.

Bridge No. G-941
Note (a). Design-Builder's bridge replacement shall provide for the New Project Infrastructure for southbound I-15 in accordance with the Project Standards and these Technical Provisions.
Note (a) Design-Builder's bridge replacement shall provide for the New Project Infrastructure for northbound I-15 in accordance with the Project Standards and these Technical Provisions.
Note (b). Southbound I-15, Design-Builder's bridge design and configuration shall be compatible with future improvements providing for four general purpose lanes, and one HOV lane including shoulders, buffers, barrier, medians, and other features in accordance with the Project Standards and as defined in these Technical Provisions. Northbound I-15, Design-Builder's bridge design and configuration shall be compatible with future improvements providing for four general purpose lanes, one auxiliary lane, and one HOV lane including shoulders, buffers, barrier, medians, and other features in accordance with the Project Standards and as defined in these Technical Provisions.
Note (c). Design-Builder's bridge replacement shall provide a minimum horizontal clearance in accordance with Project Standards and these Technical Provisions.
Note (e) Design-Builder's bridge design and configuration shall provide minimum vertical clearance in accordance with the Project Standards and these Technical Provisions.

Bridge No I-945
Note (a). Design-Builder's bridge replacement shall provide for the New Project Infrastructure for eastbound US 95 in accordance with the Project Standards and these Technical Provisions.
Note (a) Design-Builder's bridge replacement shall provide for the New Project Infrastructure for westbound US 95 in accordance with the Project Standards and these Technical Provisions.
Note (b). Design-Builder's bridge design and configuration shall be compatible with future improvements providing for three general purpose lanes, one auxiliary lane, and one HOV lane including shoulders, buffers, barrier, medians, and other features in accordance with the Project Standards and as defined in these Technical Provisions.
Note (c) Design-Builder's bridge replacement shall provide a minimum section clearance width to provide for three general purpose lanes, two left turn lanes, bike lane, curb, sidewalks, medians, and other features in accordance with the Project Standards and as defined in these Technical Provisions.
Note (d). Design-Builder's bridge replacement shall provide a minimum section clearance width to provide for three general purpose lanes, two left turn lanes, bike lane, curb, sidewalks, medians, and other features in accordance with the Project Standards and as defined in these Technical Provisions.
Note (e). Design-Builder's bridge design and configuration shall provide minimum vertical clearance in accordance with the Project Standards compatible with the future improvements.

This page intentionally left blank.

ATTACHMENT 10-1
ASPHALTIC CONCRETE FRICTION COURSE

This page intentionally left blank.

ASPHALTIC CONCRETE FRICTION COURSE

01 Description

01.01 General. This work consists of furnishing all materials, mixing at a plant, hauling, and placing a mixture of aggregate materials, mineral filler, and bituminous material (asphalt-rubber) to form a pavement course, in accordance with the details shown on the plans and the requirements of these specifications, and as directed.

Design-Builder shall be responsible for all adjustments to equipment necessary to properly accommodate the use of asphalt-rubber as a bituminous material.

The Design-Builder shall perform mix designs in accordance with Arizona Test Method 814, modified as necessary for Asphaltic Concrete Friction Course (Asphalt-Rubber).

01.02 Qualifications. Qualified Design-Builders must have performed satisfactory mixing and placement of asphalt rubber-asphaltic concrete friction course/dense grade for a minimum of 3 years on at least three projects and a minimum of 200,000 square yards.

Design-Builder's onsite paving foreman shall have a minimum of 3 years' experience, including demonstrated experience supervising the mixing and placement of a minimum of 200,000 square yards of asphaltic concrete friction course, and shall be present on the job site during all mixing and placement activities. Each member of the paving crew shall have experience performing similar paving work for a minimum of 10 lane miles of asphaltic concrete friction course placement. The person in charge of the blending operation for the crumb rubber and the asphaltic binder shall have worked on a minimum of 3 similar jobs previously.

01.03 Pre-paving Coordination. Before developing a mix design, Design-Builder shall perform the following tasks with concurrence from the Lead Engineer:

(a) Design-Builder's qualifications and reference list, which includes project name, location of work, client name, current contact phone numbers, and a brief description of work performed, including equipment used and total area of placed asphalt rubber-asphaltic concrete friction course/dense grade in square yards.

(b) A list identifying the onsite project manager and all paving crew personnel who will be assigned to the project, including a summary of each individual's experience that is complete enough for the Lead Engineer to assess whether each individual has satisfied the required qualifications.

(c) A detailed work plan for the blending and placement operation, which includes the following items:

1. The proposed construction sequence and schedule
2. The types of equipment and tools to be used
3. The number of personnel to be employed on the project
4. The sequence of the proposed asphaltic concrete blending operation

02 Materials

02.02 Bituminous Material. Design-Builder shall provide asphalt rubber conforming to the requirements of the asphalt rubber specifications. When producing the asphalt rubber, asphalt cement type PG64-16 and crumb rubber gradation Type B, conforming to the requirements of the asphalt rubber specifications, shall be used.

Design-Builder shall not dilute the asphalt-rubber with extender oil, kerosene, or other solvents. Contaminated asphalt-rubber will be rejected.

Design-Builder shall purge any kerosene or other solvents used in to clean equipment from the system before any subsequent use of that equipment.

02.03 Mix Design. Design-Builder shall develop a mix design with at least 600 pounds of produced mineral aggregate, in proportion to the anticipated bin percentages and the following materials:

(a) 5-pound of crumb rubber proposed for use
(b) 1 gallon of asphalt cement from the intended supplier
(c) 3 gallons of the proposed mixture of asphalt and rubber
(d) 1-gallon can of the hydrated lime to be used in the asphaltic concrete

Design-Builder shall submit a letter of explanation to the Lead Engineer or mix producer that details the methods of producing aggregate, including wasting, washing, blending, proportioning, etc., and any special or limiting conditions it may propose. The sources of mineral aggregate, the source of asphalt cement and crumb rubber, the asphalt-rubber supplier, and the source and type of mineral filler shall be stated in the letter.

02.04 Mix Design Revisions. Design-Builder shall not change methods of crushing, screening, washing, or stockpiling from those used during production of material used for mix design purposes without developing a new mix design.

During production of asphaltic concrete, the job mix formula may be modified if determined necessary by the Lead Engineer.

If unapproved changes are made in the source of bituminous material, sources of mineral aggregate, production methods, or proportional changes in violation of approved mix design stipulations, stop production until a new job mix formula or mix design is developed, or the Design-Builder complies with the approved job mix formula.

If, during production and on the basis of testing, the Lead Engineer concludes that a change in the job mix formula is necessary, the Design-Builder shall issue a revised job mix formula.

Before beginning full production of asphaltic concrete, Design-Builder shall produce 200 tons of asphaltic concrete and place on the outside shoulder. Production of asphaltic concrete shall be suspended for a maximum of 3 working days or until all test results are available.

02.05 Acceptance of Materials. Design-Builder shall produce aggregate that is free of deleterious materials, clay balls, and adhering films or other material that may prevent thorough coating of the aggregate with the bituminous material.

During asphaltic concrete production, obtain and test samples of aggregate for the determination of the sand equivalent and fractured faces. Should such testing present results that do not meet the requirements for sand equivalent or fractured coarse aggregate particles, Design-Builder shall cease operations and either develop a new mix design or correct deficiencies in the aggregate stockpiles.

02.06 Drying and Heating. A moisture content of 0.5 percent in the asphaltic concrete shall not be exceeded. The moisture content will be calculated in accordance with Arizona Test Method 406. Drying and heating shall be accomplished such that the mineral aggregate is precluded from becoming coated with fuel oil or carbon.

02.07 Placing and Finishing. Before placing asphaltic concrete, Design-Builder shall thoroughly remove striping, clean the surface to be paved by means of vacuum sweep truck or other approved equipment, and tack with asphalt cement.

03 Construction

03.04 Rollers. Design-Builder shall provide a minimum of three static steel wheel rollers, with drums of sufficient width that, when staggered, two rollers can cover the entire width of the mat with one pass. Design-Builder shall provide self-propelled rollers weighing not less than 9.1 metric tons (10 tons) that operate with the drive wheel in the forward position. Vibratory rollers may be used in the static mode only.

03.03 Pavers. Design-Builder shall use a material transfer vehicle (MTV) for all mainline paving operations. The MTV shall be self-propelled and able to operate independently of the paver. The MTV shall have an internal chamber for remixing, including multi-pitch augers, a covered conveyor system to prevent heat loss, and a capacity of 15 to 25 tons. In conjunction with the MTV, Design-Builder shall use a paver hopper insert that prevents the paver wings from being closed and increases hopper capacity.

03.05 Weather Limitations. Design-Builder shall not place asphaltic concrete (asphaltic-rubber) between November 1 and April 1.

Design-Builder shall place asphaltic concrete (asphaltic-rubber) only when the atmospheric temperature and the pavement surface temperature are above 29 °C (85 °F).

03.12 Joints. Design-Builder shall construct longitudinal joints only on the shoulders, or at the edge of travel lanes.

Before a surface course is placed in contact with a cold transverse construction joint, Design-Builder shall trim the cold existing asphaltic concrete to a vertical face by cutting the existing asphaltic concrete back for its full depth and exposing a fresh face. After placement and finishing of the new asphaltic concrete, both sides of the joint should be dense and the joint well-sealed. Design-Builder shall produce a surface in the area of the joint that conforms to the requirements hereinafter specified for surface tolerances when tested with the straightedge placed across the joint.

03.13 Surface Tolerances. Design-Builder shall produce completed surfacing that meets the requirements of Section 10.4.

03.18 Compaction. The temperature of asphaltic concrete just before compaction shall be a minimum of 275 ˚F.

The wheels of compactors shall be wetted with water, or if necessary soapy water, or other product to prevent the asphaltic concrete from sticking to the steel wheels during rolling. If needed, change the rolling procedure to prevent the asphaltic concrete form being picked up.

Design-Builder shall perform compactive rolling, with a minimum of two complete coverages of the mat by each roller, or as directed. A complete coverage is defined as a roller pass forward and back within a given area.

Two compactors shall be used for initial breakdown and shall be maintained no more than 300 feet behind the paving machine. The rollers for final compaction shall follow as closely behind the initial breakdown as possible. As many passes as possible shall be made with the compactors before the temperature of the asphaltic concrete falls below 220 °F.

Bituminous Materials

Asphalt Cement, Grade PG 64-16 shall conform to the following:

TEST	TEST METHOD	REQUIREMENT
Tests on Original Binder:		
Flash point, °C	AASHTO T48	230 Min.
Viscosity @ 135 °C, Pa•s	AASHTO T316	3.00 Max.
Dynamic Shear, G*/sin δ, Test Temp 64 °C @ 10 rad/s, kPa	AASHTO T315	1.00 Min.
Solubility	Nev. T44	99.0 Min.
Tests on Residue from R.T.F.O., AASHTO T240:		
Mass Loss, %	AASHTO T240	1.00 Max.
Dynamic Shear, G*/sin δ, Test Temp 64 °C @ 10 rad/s, kPa	AASHTO T315	2.20 Min.
Tests on Residue from Pressure Aging Vessel, AASHTO R28 @ 100 °C :		
Dynamic Shear, G*sin δ, Test Temp 25 °C @ 10 rad/s, kPa	AASHTO T315	5000 Max.
Creep Stiffness, S, Test Temp -6 °C @ 60 sec, MPa	AASHTO T313[a]	300 Max.
Creep Stiffness, m-value, Test Temp -6 °C @ 60 sec	AASHTO T313[a]	0.300 Min.

[a] If the creep stiffness is below 300 MPa, the direct tension test is not required. If the creep stiffness is between 300 and 600 MPa, the direct tension failure strain can be used in lieu of the creep stiffness requirement. The m-value requirement must be satisfied in both cases.

Asphalt Cement, Grade PG 64-16 not conforming to the requirements specified herein will not be accepted.

The aggregate shall conform to the following requirements:

Sieve Size	Percent Passing by Mass
9.5 millimeter (3/8 inch)	100
4.75 millimeter (No. 4)	30-45
(No. 8)	4-8
75 micrometer (No. 200)	0-2.5

Mineral aggregate shall conform to the requirements in the following table when tested in accordance with the applicable test methods.

Tests on aggregates outlined in the following table, other than abrasion, shall be performed on materials furnished for mix design purposes and composited to the mix design gradation. Abrasion shall be performed separately on samples from each source of mineral aggregate. All sources shall meet the requirements for abrasion:

MINERAL AGGREGATE CHARACTERISTICS

Characteristic	Test Method	Requirement
Combined Bulk Specific Gravity	Arizona Test Method 814	2.35 – 2.85
Combined Water Absorption	Arizona Test Method 814	0-2.5%
Sand Equivalent Method 242	Arizona Test	Minimum 45
Fractured Faces Method 212	Arizona Test fractured faces)	Minimum 90 % (two
Flakiness Index Method 233	Arizona Test	Maximum 25
Abrasion 500 Rev., Max 37%	AASHTO T96	100 Rev., Max 9%

The allowable range of percent absorbed asphalt-rubber shall be 0 to 1.0, when tested in accordance with the applicable section of Arizona Test Method 815.

Asphalt Rubber

Asphalt cement shall conform to the following requirements for the types and grades designated.

Sampling of asphalt cement shall conform to the requirements of AASHTO T 40. Samples shall be taken by Design-Builder and witnessed by the Lead Engineer. The Lead Engineer shall specify the point of sampling and the number of samples.

Design-Builder shall provide convenient facilities for obtaining accurate samples of asphalt cement.

At least 7 working days before the start of asphaltic concrete production, Design-Builder shall obtained a Certificate of Analysis showing complete AASHTO M 320 asphalt cement testing. Laboratory-prepared samples will not be acceptable. Asphaltic concrete production shall not begin until the Lead Engineer evaluates the acceptability of the proposed asphalt cement.

If, during asphaltic concrete production, testing shows that asphalt cement fails to meet the requirements of AASHTO M320 for the specified grade, the asphaltic concrete represented by the corresponding test results shall be evaluated for acceptance. Should the asphaltic concrete be allowed to remain in place, the Design-Builder shall perform an engineering analysis of the expected performance of the asphaltic concrete in which the asphalt cement is incorporated. The analysis shall detail any proposed corrective action and the anticipated effect of such corrective action on the performance. Within 3 working days, the Lead Engineer shall decide whether or not to accept Design-Builder's proposal. If the proposal is rejected, the asphaltic concrete shall be removed and replaced with asphaltic concrete meeting the requirements of the applicable specifications. If Design-Builder's proposal is accepted, the asphalt concrete shall remain in place and any necessary corrective action shall be performed.

During production of asphalt rubber, Design-Builder shall test the blended and cured asphalt rubber for rotational viscosity before incorporating it into the mixture. Design-Builder shall provide a certified tester and a calibrated rotational viscometer to perform this testing. The blended and cured asphalt rubber shall meet the rotational viscosity requirements.

Physical Properties and Tests

Asphalt cement shall be PG64-16 conforming to the requirements of AASHTO M 320. The pressure aging temperature shall be 100 °C.

Crumb rubber shall meet the following gradation requirements when tested in accordance with Arizona Test Method 714.

Sieve Size	Percent Passing
	Type B
No. 10	100
No. 16	65 - 100
No. 30	20 - 100
No. 50	0 - 45
No. 200	0 - 5

The rubber shall have a specific gravity of 1.15 ± 0.05 and shall be free of wire or other contaminating materials, except that Type A rubber shall contain no more than 0.1 percent fabric and Type B shall contain no more than 0.5 percent fabric. Calcium carbonate, up to 4 percent by weight of the granulated rubber, may be added to prevent the particles from sticking together.

Certificates of Compliance shall be submitted confirming that the rubber is a crumb rubber, derived from processing whole scrap tires or shredded tire materials; and that the tires from

which the crumb rubber is produced are taken from automobiles, trucks, or other equipment owned and operated in the United States. The certificates shall also verify that the processing does not produce, as a waste product, casings or other round tire material that can hold water when stored or disposed of above ground.

The asphalt-rubber shall contain a minimum of 20 percent ground rubber by the weight of the asphalt cement.

Asphalt-rubber shall conform to the following:

Property	Requirement Type 1
Grade of base asphalt cement	PG 64-16
Rotational Viscosity: 350 °F; pascal seconds (AASHTO T316)	1.5 - 4.0
Penetration: 39.2 °F, 200 g, 60 sec. (AASHTO T49); minimum	10
Softening Point:(AASHTO T 53); °F, minimum	135
Resilience: 77 °F(ASTM D 5329); %, minimum	30

During production of asphalt-rubber, Design-Builder shall combine materials in conformance with the asphalt-rubber design unless otherwise approved by the Lead Engineer.

The temperature of the asphalt-cement shall be between 350 °F and 400 °F at the time of addition of the ground rubber. No agglomerations of rubber particles in excess of 2 inches in the least dimension shall be allowed in the mixing chamber. The ground rubber and asphalt-cement shall be accurately proportioned in accordance with the design and thoroughly mixed before the beginning of the 1-hour reaction period. Design-Builder shall document that the proportions are accurate and that the rubber has been uniformly incorporated into the mixture. Design-Builder shall also demonstrate that the rubber particles have been thoroughly mixed such that they have been "wetted." The occurrence of rubber floating on the surface or agglomerations of rubber particles shall be evidence of insufficient mixing. The temperature of the asphalt-rubber immediately after mixing shall be between 325 °F and 375 °F. The asphalt-rubber shall be maintained at such temperature for 1 hour before being used.

Before use, the viscosity of the asphalt-rubber shall be tested by the use of a rotational viscotester, which is to be furnished by Design-Builder or the supplier.

Once the asphalt-rubber has been mixed, it shall be kept thoroughly agitated during periods of use to prevent settling of the rubber particles. During the production of asphaltic concrete, the temperature of the asphalt-rubber shall be maintained between 325 °F and 375 °F. However, in no case shall the asphalt-rubber be held at a temperature of 325 °F or above for more than 10 hours. Asphalt-rubber held for more than 10 hours shall be allowed to cool and gradually reheated to a temperature between 325 °F and 375 °F before use. The cooling and reheating shall not be allowed more than once. Asphalt-rubber shall not be held at temperatures above 250 °F for more than 4 days.

For each load or batch of asphalt-rubber, Design-Builder shall provide the Lead Engineer with the following documentation:

(1) The source, grade, amount, and temperature of the asphalt cement before the addition of rubber.

2) The source and amount of rubber and the rubber content expressed as percent by the weight of the asphalt cement.

(3) Times and dates of the rubber additions and resultant viscosity test.

(4) A record of the temperature, with time and date reference for each load or batch. The record shall begin at the time of the addition of rubber and continue until the load or batch is completely used. Readings and recordings shall be made at every temperature change in excess of 20°F, and as needed to document other events that are significant to batch use and quality.

ATTACHMENT 10-2
PLANTMIX BITUMINOUS GAP-GRADED SURFACE

This page intentionally left blank.

Note: References in this Attachment 10-2 to Sections and Subsections not contained herein shall be understood to refer to the corresponding Section or Subsection in the *Uniform Standard Specifications (USS) for Public Works Construction Off-Site Improvements, Clark County Area Nevada*. See Section 26 (*Standards and References*).

SECTION 413

PLANTMIX BITUMINOUS GAP-GRADED SURFACE

01 DESCRIPTION

413.01.01 GENERAL

A. This work shall consist of placing a gap-graded wearing course, bonded to the surface, in accordance with these specifications and in conformity with the lines, grades, thickness, and the typical cross sections shown on the plans or established by the Engineer.

B. The bonded wearing course shall consist of an application of a warm polymer modified asphalt emulsion to create a polymer modified membrane (PMM) followed immediately with a hot gap-graded ultra-thin asphalt concrete surface course (UTACS).

C. This work shall not be started until the Contractor has completed all heavy equipment work or any other work that could scar or mar the finished gap-graded surface.

D. The requirements of Section 401, "Plantmix Bituminous Pavements – General," shall be applicable to this work, except as hereinafter specified.

413.01.02 REFERENCE CODES AND STANDARDS

A. Related Interagency Quality Assurance Committee (IQAC) procedures at:

http://www.clarkcountynv.gov/Depts/public_works/construction_mgmt/Pages/Materials.aspx

413.01.03 REQUIREMENTS

A. Persons involved with the placement of UTACS shall be trained by the manufacturer and/or the Nevada T2 Program.

02 MATERIALS

413.02.01 GENERAL MATERIALS

A. The materials shall conform to Subsection 401.02.01, "Composition of Mixtures," with the following exceptions:

1. Prior to starting work, the Contractor shall submit a proposed job-mix formula in writing for review and approval by the Engineer.

2. The proposed job-mix formula shall be determined by an AASHTO certified testing laboratory, using Nevada Alliance for Quality Transportation Construction

(NAQTC) certified technicians, based on the tests required to determine the gradation and surface capacity for coarse aggregate.

3. The gradation shall be Type S1, S2, or S3 in accordance with Subsection 705.03.08, "Plantmix and Roadmix Asphalt Concrete Surface Course UTACS Type S1 through S3," and the contract Special Provisions.

4. The bituminous materials shall be PG76-22CC in accordance with Section 703.03.02, "Asphalt Cements."

B. Prior to the production of the UTACS gap-graded mix material, all of the contract aggregate quantity shall be stockpiled and shall be tested by the Contractor. The tests are to be submitted to the Engineer no earlier than two weeks prior to placement and may be used only after the Engineer has taken no exception to the results.

413.02.02 COMPOSITION OF GAP-GRADED (UTACS) MIXTURE

A. The plantmix gap-graded Ultra-Thin Asphalt Concrete Surface (UTACS) mixture shall be composed of aggregates and bituminous materials as described in these specifications. The criteria for the design is based on Subsection 413.02.01, “General Materials,” above and the following:

1. Film Thickness (µm):

   a. Gradation surface area factor using the film thickness calculation based on effective asphalt content and aggregate surface area according to Asphalt Institute MS 2 Table 6.1.

   b. The minimum film thickness shall be 10 µm.

2. Specimens for AASHTO T283 testing shall be compacted using the Superpave gyratory compactor applying 100 gyrations or using the Marshall compactor applying 50 blows on each side of the 4 inch diameter sample.

   a. Use mix quantity necessary to obtain compacted samples 2.5 inches +/-0.05 inch in height.

   b. Further test compacted samples regardless of air void levels achieved after 100 gyrations or 50 blows on each side.

   c. Apply vacuum to samples to be conditioned for 20 seconds and proceed without calculating percent saturation.

   d. Mixing and compaction temperatures are to be recommended by the binder supplier.

   e. The minimum moisture susceptibility shall be 80 percent retained strength.

3. The minimum air voids shall be 4 percent and the maximum aggregate surface shall be 26 square feet per pound.

4. Marshall stabilities are not required.

5. Gradation shall be in accordance with Subsection 705.03.08, "Plantmix and Roadmix Asphalt Concrete Surface Course UTACS Type S1 through S3" of Section 705, "Aggregates for Bituminous Courses."

6. The binder type shall be PG76 22CC as described in Section 703, "Bituminous Materials."

413.02.03 POLYMER MODIFIED MEMBRANE

A. The UTACS pavement shall consist of an application of a warm polymer modified membrane (PMM) asphalt emulsion, as specified under Section 703, "Bituminous Materials," followed immediately with an ultra-thin surface course of quality hot mix asphalt concrete.

B. The PMM emulsion shall be sprayed immediately prior to the application of the surface course so that no wheel or other part of the paving machine comes in contact with the PMM before the surface course is applied.

C. The process of applying the PMM, placement of the surface course, and screed compacting shall be performed in under 5 seconds during normal paving speeds, resulting in a homogeneous surface that can be opened to traffic immediately upon sufficient cooling to 160 degrees F or below.

D. The PMM target design application rate shall be in accordance with Table 1. The PMM application rates shall be adjusted in the field to account for the texture of the existing pavement, traffic, and project uniqueness.

TABLE 1 – PMM APPLICATION RATES

Gradation Type	Application Rate
S1	0.13 gal/sq yd
S2	0.15 gal/sq yd
S3	0.17 gal/sq yd

03 CONSTRUCTION

413.03.01 GENERAL CONSTRUCTION

A. The construction shall conform to Subsection 401.03.01, "Bituminous Mixing Plant," through Subsection 401.03.16, "Surfacing Miscellaneous Areas," with the exceptions below.

413.03.02 GAP-GRADED UTACS PAVING EQUIPMENT

A. The Contractor shall use a self-priming paver, designed and built for the purpose of applying the PMM bond and the UTACS pavement.

1. All other equipment and tools shall be approved by the Engineer.

2. All equipment and tools shall be maintained in satisfactory working condition at all times.

B. The self-priming machine shall meet the following requirements:

1. Be capable of spraying the PMM emulsion, applying the surface course overlay, and providing a smooth surface to the mat in 1 pass at the rate of 35.5 to 92 feet/minute.

2. Shall incorporate a receiving hopper, feed conveyor, insulated storage tank for PMM emulsion, electronic device to determine rate of emulsion application, metered PMM emulsion system, spray bar, and variable width.

3. The integrated distributor-paver shall be equipped with a full-width, heated vibratory screed that can spread and finish the bonded wearing course to the required cross section and grade that produces a uniformly finished surface free from tearing or other blemishes.

C. At all times during paving, the sump pump for excess spray bar emulsion shall be operating as indicated by the required warning light to prevent overflow of the tray. The screed shall have the ability to be crowned at the center, both positively and negatively, and have vertically adjustable extensions to accommodate the desired pavement profile.

D. The PMM shall be applied in accordance with the following:

1. With a mechanical pressure spray bar.

2. Within a tolerance of 0.018 gallon per square yard of the application rate.

3. At a uniform rate for the full paving width.

E. Rollers:

1. Rolling of the wearing course shall consist of a minimum of 2 passes with a steel double drum asphalt roller of minimum weight of 10 tons, before the material temperature has fallen below 185 degrees F.

2. At no time shall the roller or rollers be allowed to remain stationary on the freshly placed asphalt concrete.

3. Rolling shall immediately follow the placement of the UTACS with approved asphalt rollers.

4. Rollers shall be monitored to ensure the rollers are not picking up material and that the setting process is completed while the mat is above 185 degrees F.

5. Rollers shall be well maintained in reliable operating condition and be equipped with functioning water system and scrapers to prevent adhesion of the fresh mix onto the roller drums.

6. Adequate roller units shall be supplied so the rolling will be accomplished promptly following the placement of the material.

7. A release agent (added to the water system) may be required to prevent adhesion of the fresh mix to the roller drum and wheels.

8. Rolling shall normally be done in the static mode.

F. Sweepers: The Contractor shall have a minimum of 1 approved sweeper available at all times during the construction of the surface course to pick up loose material.

G. Material Transfer Vehicle (MTV): An MTV shall be used when placing UTACS, and shall meet the following requirements:

1. Able to remix the UTACS mixture to eliminate truck end segregation, minimize material temperature loss, and deliver a uniform mixture to the paver.

2. Self-propelled machine totally independent of the paver.

3. High-capacity truck unloading system to receive UTACS mix from the haul units.

4. Minimum 25 ton surge capacity to minimize paver start/stops and maximize trucking efficiency.

5. Equipped with a pivoting paver loading conveyor able to swing 55 degrees to either side to allow off-lane paving.

413.03.03 APPLICATION OF GAP-GRADED UTACS SURFACE

A. The UTACS pavement shall not be placed on wet pavement. The pavement surface temperature shall not be less than 50 degrees F and the ambient temperature shall not be less than 50 degrees F and rising.

B. The PMM shall be sprayed by a metered mechanical pressure spray bar at a temperature of 140 degrees F –180 degrees F.

1. The sprayer shall accurately and continuously monitor the rate of spray and provide a uniform application across the entire width to be overlaid.

2. The machine will be equipped with an electronic device by which the rate of emulsion application can be determined while the paver is in operation.

3. The PMM shall be applied manually where the screed extension or handwork is required outside the range of the machine mounted spray bar.

4. Over-application or double application of emulsion on the existing base shall not be permitted.

5. The mix design target PMM shot rate shall be adjusted based upon the existing pavement surface conditions, traffic, and project uniqueness, with the approval of the Engineer.

6. The PMM field-adjusted shot rate shall be reduced by 0.03 gallon/square yard within 150 feet of the intersection, to minimize the risk of flushing under the

action of standing and slow moving traffic, unless a full-width mill transition has been specified in the plans.

7. The Contractor and Engineer shall establish an acceptable range for the spray rate.

8. The PMM shall have a minimum of 2 daily yield verifications to be reported to the Engineer, 1 at midway production and 1 at the end of production.

9. These reports shall be the sum of the rates documented each 100 linear foot by the Contractor QC Inspector.

C. The PMM application rate may be adjusted as directed by the Engineer based on the texture depth of the existing pavement measured according to ASTM E965, "Measuring Pavement Macrotexture Depth Using a Volumetric Technique." Suggestions to adjust the PMM application rate as a function of texture depth of the existing pavement are shown in Table 2.

D. No wheel or other part of the paving machine shall come in contact with the PMM before the surface course is applied. Contractor shall use placement operations and equipment that:

1. Keep surfaces clean and free of contamination and debris prior to placement of the polymer modified asphalt emulsion membrane.

2. Prevent tracking through the polymer modified asphalt emulsion membrane prior to placement of the gap-graded polymer modified asphalt concrete.

E. The surface course shall be applied at a temperature of 302 degrees F – 330 degrees F and shall be spread over the PMM less than 5 seconds after the application of the PMM during normal paving speeds.

TABLE 2 – PMM RATE ADJUSTMENTS DUE TO PAVEMENT TEXTURE

Pavement Type - Texture Description	Texture Depth Range (mm)	PMM Rate Correction	
		l/m2	gal/yd2
Flushed asphalt	<0.5	-0.04 to -0.27	-0.01 to -0.06
Black asphalt	0.5 to 1.0	0	0
Smooth asphalt, non-porous	1.0 to 1.2	0	0
Absorbent asphalt, slightly porous, oxidized	1.2 to 1.7	0.09	0.02
Slightly pocked asphalt, porous, oxidized	1.7 to 2.0	0.18	0.04
Badly pocked asphalt, porous, oxidized	>2.0	0.27	0.06
Asphalt milled surface	N/A	0	0
Asphalt within 150 ft of intersection without mill	N/A	-0.13	-0.03
Asphalt within 150 ft of intersection with mill	N/A	0	0

F. When filling the emulsion tank, no emulsion shall overflow into the paver hopper.

1. Should emulsion be spilled into the paver hopper, paving shall stop and all contaminated material shall be removed from the paver hopper.

2. Under no circumstances shall the contaminated material be placed on the roadway.

G. Overlapping or hot lapping of the bonded wearing course shall not be permitted when paving miscellaneous areas in order to achieve project layout requirements.

H. Material that has been placed through the paving screed or over the polymer modified asphalt emulsion membrane shall not be reintroduced into the paving process.

1. UTACS shall be applied at a thickness such that no aggregate is fractured.

2. The S3 mix shall be applied at a minimum 3/4 inch thickness.

3. The S2 mix shall be applied at a minimum 5/8 inch thickness.

4. The S1 mix shall be applied at a minimum of 9/16 inch thickness.

413.03.04 SURFACE PREPARATION FOR UTACS

A. The following items shall be performed prior to the commencement of paving operations and paid for under the appropriate bid item numbers:

1. Manhole covers, drains, grates, catch basins, and similar utility structures shall be protected and covered with building felt prior to paving, and shall also be clearly referenced for location and adjustment after paving.

2. Thermoplastic traffic markings shall be removed.

3. Pavement cracks and joints greater than 0.25 inches wide shall be cleaned and filled using an approved material and method.

a. There shall be no over-banding of cracks which will be covered by UTACS.

b. Crack sealing shall be completed at least 7 days prior to paving.

4. Surface irregularities greater than 1 inch deep shall be milled and/or filled with a material approved by the Engineer. All repairs shall be completed 1 week prior to paving or as recommended by the sealant manufacturer or the Engineer.

5. The entire pavement surface to be overlaid shall be thoroughly cleaned, giving special attention to accumulated mud and debris. Pressurized water and/or vacuum systems may be required to ensure a clean surface.

6. Cold planing shall be completed as specified herein.

413.03.05 JOINTS

A. Longitudinal joints shall be constructed only on the shoulders or at the edge of the travel lanes.

413.03.06 QUALITY CONTROL ASPECTS

A. PMM application rate shall be checked twice per day using random sample location techniques.

B. Determination of the application rate of the PMM shall be as follows:

1. At the location to be sampled, immediately adjacent to the paving area, use 2 pads approximately 15-inches wide by 20 inches long, placed side by side, to determine the PMM application rate based on the average of 2 application rate measurements.

2. Capture the tare weight of each pad to be used prior to capturing the PMM sample.

3. Place the first pad 5 feet in front of spray bar on the spray paver.

4. Place the second pad in front of the first pad farther away in the travel direction.

5. Set the machine in automatic mode; do not use manual mode when calibrating emulsion application rate.

6. Circulate the emulsion through the spray bars for approximately 5 minutes before spray calibration in order to purge the system.

7. Select the machine ground speed/production rate to be no less than 30 feet per minute.

8. Select the desired emulsion application rate and take a sample at this setting.

9. Weigh each pad that has been sprayed with the PMM.

10. Calculate the net weight of emulsion and convert it into gallons using the PMM weight-per-gallon information provided by the emulsion manufacturer.

11. Divide the gallons of PMM by the pad area and compare with the target application rate in gallon per square yard.

C. A minimum of 3 daily samples of the bituminous wearing course shall be tested for asphalt content and gradation.

1. If the average of the daily test results vary from the job-mix formula by more than the tolerance indicated in Subsection 705.03.08, "Plantmix and Roadmix Asphalt Concrete Surface Course UTACS Type S1 through Type S3," production shall stop.

2. The Contractor shall identify the cause and document what corrective action will be taken.

3. The job-mix formula may be adjusted only as approved by the Engineer.

D. A minimum of 2 daily UTACS mixture yield checks shall be completed, 1 at midday during production and 1 at the end of the day's production, to ensure that mixture application rate requirements defined in Subsection 413.03.03, "Application of Gap-Graded UTACS Surface," are met.

E. Placement Limitations: The UTACS and/or PMM shall not be placed on pavement that has visible surface moisture.

F. The Contractor shall immediately cease operations if any precipitation occurs. If any material is placed during the precipitation event, such material shall be removed and replaced, as directed by the Engineer, at no additional cost to the Contracting Agency.

G. Place UTACS and/or PMM only when the pavement surface temperature is 50º F and rising and the ambient temperature is 50 degrees F and rising.

H. The UTACS shall not be placed if the forecast low from the National Weather Service is 32 degrees F or lower for the night following any single day's paving operation.

I. Because of the minimal depth of the surface course being placed, the course may be damaged if opened to traffic too quickly. Therefore, the new UTACS pavement shall not be opened to traffic until the rolling operation is complete and the material has cooled sufficiently to resist damage (approximately 160 degrees F).

J. No more than 15 minutes shall be allowed to elapse between the delivery trucks carrying the UTACS mix to the paver or 3 cold joints per 1/2 mile. Cold joints are defined as when the last delivery truck leaves the paver, the paver has stopped more than 15 minutes before the next delivery truck is brought to the paver.

413.03.07 SURFACE TOLERANCES FOR UTACS

A. The completed surfacing shall be thoroughly compacted, smooth, and free from ruts, humps, depressions, or irregularities.

1. Any ridges, indentations, or other objectionable marks left in the surface of the bituminous mixture by blading or other equipment shall be removed by rolling or other means.

2. The use of equipment that leaves ridges, indentations, or other objectionable marks in the bituminous mixture shall be discontinued, and other acceptable equipment shall be furnished by the Contractor.

B. The Contractor shall produce completed surfacing which meets the requirements of Subsection 402.03.03.D, "Profilograph Measurement," when required by the Contracting Agency, with the following additions and exceptions to the profilograph measurement:

1. The Contractor shall furnish and operate a profilograph as specified in the subsection noted above at the time and date ordered by the Engineer.

2. Any requirement for grinding shall have a depth selected so that at least 80 percent of the original UTACS thickness is preserved in order to minimize the risk of localized bleeding.

3. Liquidated damages may be assessed, as required by the Contracting Agency, for each such high point that is allowed to remain in place.

4. The profile index requirements herein shall not apply to the pavement within 30 feet of either end of a concrete bridge deck (including approach slabs). The finished surface of such pavement shall, however, meet all other requirements of this section.

413.03.08 UTACS PAVEMENT REPAIRS

A. The Contactor shall pay all costs of UTACS pavement repair activities and implementation, except as otherwise provided herein.

B. The Contractor shall have the right to use such pavement repairs deemed necessary to bring the UTACS pavement up to the performance criteria established in Subsection 413.03.07, "Surface Tolerances for UTACS."

SECTION 703

BITUMINOUS MATERIALS

01 SCOPE

703.01.01 MATERIALS COVERED

A. This specification covers the quality of asphalt cement, liquid asphalt, emulsified asphalt, cationic emulsion, anionic emulsion and rubber-asphalt crack sealant.

02 REQUIREMENTS

703.02.01 CONTRACTOR'S RESPONSIBILITY

A. Bituminous material failing the test requirements of this section, including tolerances, shall be subject to Subsection 109.02, "Scope of Payment."

703.02.02 MATERIAL SOURCE RESPONSIBILITY

A. Bituminous materials supplied under these specifications shall be provided from a source authorized by the Engineer and/or IQAC. The process for authorization may be obtained from the Contracting Agency's Public Works Construction Management Division.

703.02.03 SHIPPING NOTICE

A. Shipping notices shall be mailed upon making shipment and shall contain the following information:

1. Consignee and destination,
2. Agency contract number,
3. Delivery point,
4. Date shipped,
5. Car initials or number of truck transport delivery ticket number,
6. Type and grade of material,
7. Quantity loaded,
8. Loading temperature,
9. Net quantity,
10. Signature of shipper or authorized representative,

B. When shipments of materials arrive on the project after normal working hours, the Contractor shall notify the Engineer sufficiently in advance to make arrangements for an

inspector to be present when the material is sampled. All sampling by the Vendor or Contractor shall be performed or observed by an NAQTC certified technician.

C. Three copies of the shipping notice shall be mailed to the Contracting Agency.

03 PHYSICAL PROPERTIES AND TESTS

703.03.01 REFINERY TEST REPORT

A. Refinery test reports shall be mailed to the Engineer as soon as tests have been completed, and the report shall contain the following data:

1. Date of shipment,
2. Car initials or number of truck transport delivery ticket number,
3. Destination and consignee,
4. Contracting Agency contract number (or purchase order number, if applicable),
5. Type and grade of material,
6. Certificate of grade (certify that material conforms to these specifications, and itemize results on tests performed and date of test),
7. Signature of refinery's authorized representative,

B. The certificate of compliance shall be used as a basis of permitting immediate use of the material on the job and shall represent conditional acceptance only. The certificate of compliance shall include a copy of the tests for that lot shipment.

703.03.02 ASPHALT CEMENTS

A. Asphalt cement shall be prepared by the distillation of crude petroleum. This asphalt shall be homogeneous, free from water, and shall not foam when heated to 347 degrees F.

B. These specifications cover the following viscosity grades: AC 2.5, AC 5, AC 10, AC 20, AC 30, AC 40 and the Superpave Performance Grades (PG) for the Southern Nevada region as listed in Table 1, Table 2, Table 2A, and Table 2B.

TABLE 3 – LOCATION OF BITUMINOUS GRADE USE

Location	Viscosity Grades
Clark County Region below 5,000 feet elevation	PG 76-22CC, AC-30[1], or PG 64-22*[1]
Roads at and above 5,000 feet elevation	PG 64-34CC

1. For use in detours, below PCCP, permanent pavement patches, or other locations as determined by the Engineer.

C. The various grades set forth above shall conform to the requirements and the methods of testing shown in Table 2, Table 2A, and Table 2B.

1. Performance grade material must have been prepared from crude petroleum product.

2. The asphalt cements shall be homogenous, free from water and shall not foam when heated to 347 degrees F.

3. Blending of asphalt cements to produce a specified performance grade shall result in a uniform, homogenous blend with no separation.

4. Modified binders shall be blended at the source of supply and delivered as a completed mixture to the job site.

5. It shall not be transported via railroad car.

6. Only elastomeric Styrene Butadiene Styrene (SBS), Styrene-Butadiene (SB), Styrene-Butadiene Rubber (SBR), and Styrene Ethylbutylene Styrene (SEBS) rubber shall be added to the base binder asphalt cement, to produce a binder that complies with specification requirements.

703.03.03 LIQUID ASPHALTS

A. Liquid asphalts shall consist of materials conforming to the following classifications:

1. Rapid curing (RC) products: Paving asphalt with a penetration of approximately 85 to 100 fluxed or blended with a naphtha solvent.

2. Medium curing (MC) products: Paving asphalt fluxed or blended with a kerosene solvent.

3. Slow curing (SC) products: Natural crude oils or residual oils from crude asphaltic petroleum.

B. When tested in accordance with the standard methods of AASHTO and ASTM, the grades of liquid asphalt shall conform to the requirements specified in Table 2, Table 3, and Table 4.

703.03.04 EMULSIFIED ASPHALT

A. Emulsified asphalt for slurry seal shall conform to CQS 1h as specified in Table 6 when tested in accordance with AASHTO and ASTM.

703.03.05 SLURRY SEAL

A. The slurry seal and its components shall conform to the requirements of Table 7 when tested in accordance with AASHTO, ASTM, and ISSA procedures.

703.03.06 MICROSURFACING

A. The microsurfacing and its components shall conform to the requirements of Table 8 when tested in accordance with AASHTO, ASTM, and International Slurry Seal Association (ISSA) procedures.

703.03.07 POLYMER MODIFIED EMULSION MEMBRANE

A. This material shall consist of a polymer modified asphalt emulsion. Its role is to form a water impermeable seal at the existing pavement surface and to bond the new hot mix to the existing surface. The product shall be smooth and homogeneous and conform to the requirements in Table 10.

TABLE 2 – NEVADA TABLE 2 REQUIREMENTS FOR ASPHALT CEMENT GRADED BY VISCOSITY AT 140°F
(Grading Based on Original Asphalt)

Test	AASHTO Test Method	VISCOSITY GRADE					
		AC-2.5	AC-5	AC-10	AC-20	AC-30	AC-40
Viscosity at 140°F poise	T202	200 - 300	400 - 600	800 - 1,200	1,600 - 2,400	2,400 - 3,600	3,200 - 4,800
Viscosity at 275°F cSt, minimum	T201	125	175	250	300	350	400
Penetration at 77°F 100 g/5 seconds, minimum	T49	220	140	80	60	50	40
Flash point (C.O.C., °F minimum)	T48	325	350	425	450	450	450
Solubility in Trichloroethylene (percent, minimum)	T44	99	99	99	99	99	99
Ductility at 39°F 1 cm/min. cm minimum	T51	50	25	15	5	--	--
Tests on Residue From RTFO							
Loss on heating, percent maximum	T240	--	1	0.5	0.5	0.5	0.5
Viscosity at 140°F poise maximum	T202	1,000	2,000	4,000	8,000	12,000	16,000

TABLE 2A – PERFORMANCE GRADE FOR ORIGINAL MATERIALS

Test	Test Method	PG 76-22CC Modified	PG 64-34CC Modified	PG 64-22
Original Materials				
Flash Point Degrees (°C) - minimum	AASHTO T48	230		
Viscosity (Brookfield) @135°C, Pa·s Maximum	ASTM D4402	3.0	3.0	3.0
Dynamic Shear G*/sin ä = minimum @ 10 rad/s at Grade Test Temp. °C	AASHTO T315	1.3	1.0	1.0
Ductility at 4°C, 5 cm/min. cm - minimum	NDOT T746	20	30	30
#10 Sieve Test, Particulates retained	NDOT T730	0		
Solubility in Trichloroethylene, percent (%) - minimum	AASHTO T44	99		
Polymer Content, % by mass minimum	(1)	3.0	3.0	N/A
Toughness in-lb – minimum(2)	NDOT T745	150	75	N/A
Tenacity in-lb - minimum	NDOT T745	100	50	N/A
If T&T fails, Elastic Recovery, percent (%) - minimum	AASHTO T 301	60	60	N/A

(1) Certificates of compliance provided for the material shall certify that the minimum polymer content is present.
(2) NV T 745 Method of Toughness and Tenacity: Scott Tester (or equivalent), inch-pounds @ 77º F., 20 inches per minute pull with tension head 7/8-inch diameter.

TABLE 2B – PERFORMANCE GRADE FOR RTFO AND PAV CONDITIONING

Tests On Residue From RTFO NDOT T728				
Test	**Test Method**	**PG 76-22CC Modified**	**PG 64-34CC Modified**	**PG 64-22**
Ductility at 5°C, 5cm/min. cm - minimum	NDOT T746	10	10	10
Mass Loss, Percent (%) - maximum	NDOT T728	1.0	1.0	1.0
Dynamic Shear, G*/sin ä = minimum kPa @ 10 rad/s at Test Temp. in °C	AASHTO T315	2.2	2.2	2.2
Test On Residue After PAV				
PAV, Test Temp. in °C	AASHTO R28	110	100	100
Dynamic Shear, G*/sin ä = Max kPa @ 10 rad/s at Grade Test Temp. in °C	AASHTO T315	5,000	5,000	5,000
BBR - Creep Stiffness, S -MPa maximum @ 60 sec, atGrade Test Temp. in °C	AASHTO T313	300	300	300
BBR m-value = minimum @ 60s, at Grade Test Temp. in °C	AASHTO T313	0.300	0.300	0.300
Direct Tension, Failure Strain = % minimum @ 1.0 mm/min, at Grade Test Temp. in °C	AASHTO T314	1.0	1.0	1.0

TABLE 3 – UNIFORM PACIFIC COAST SPECIFICATIONS FOR RAPID CURING (RC) LIQUID ASPHALTS

Test	AASHTO Test Method	ASTM Test Method	GRADES							
			RC-70		RC-250		RC-800		RC-3000	
			Min.	Max.	Min.	Max.	Min.	Max.	Min.	Max.
Kinematic Viscosity at 140°F cSt	--	D2170	70	140	250	500	800	1,600	3,000	6,000
Flash Point (Tag Open Cup), °F	T79	D1310	--	--	80	--	80	--	80	--
Distillation										
Distillate percent of total distillate to 680°F	--	--	10	--	--	--	--	--	--	--
to 437°F	T78	D402	50	--	30	--	15	--	--	--
to 500°F	--		70	--	60	--	45	--	25	--
to 600°F	--	--	85	--	80	--	75	--	70	--
Residue from distillation to 680°F, volume percent by difference	--	--	55	--	65	--	75	--	80	--
Test on Reside from Distillation										
Penetration, 77°F, 100g/5 seconds	T49	D5	80	120	80	120	80	120	80	120
Ductility, 77°F, cm*	T51	D113	100	--	100	--	100	--	100	--
Solubility in Trichloroethylene, %	T44	D2042	99.5	--	99.5	--	99.5	--	99.5	--
Water, %	T55	D95	--	0.2	--	0.2	--	0.2	--	0.2
GENERAL REQUIREMENT: The material shall not foam when heated to application temperature recommended by the Asphalt Institute.										

* If ductility is less than 100, material will be accepted if ductility at 60°F is 100 minimum at a pull rate of 5 cm/min

TABLE 4 – UNIFORM PACIFIC COAST SPECIFICATIONS FOR MEDIUM CURING (MC) LIQUID ASPHALTS

Test	AASHTO Test Method	ASTM Test Method	GRADES							
			MC-70		MC-250		MC-800		MC-3000	
			Min.	Max.	Min.	Max.	Min.	Max.	Min.	Max.
Kinematic Viscosity at 140°F cSt	T201	D2170	70	140	250	500	800	1,600	3,000	6,000
Flash Point (Tag Open Cup), °F	T79	D1310	100	--	150	--	150	--	150	--
Distillation										
Distillate percent of total distillate to 680°F	--	--	--	--	--	--	--	--	--	--
to 437°F	--	--	--	20	--	10	--	--	--	--
to 500°F	T78	D402	20	60	15	55	--	35	--	15
to 600°F	--	--	65	90	60	87	45	80	15	75
Residue from distillation to 680°F, volume percent by difference	--	--	55	--	67	--	75	--	80	--
Test on Reside from Distillation										
Penetration, 77°F, 100g/5 seconds	T49	D5	120	250	120	250	120	250	120	250
Ductility, 77°F, cm*	T51	D113	100	--	100	--	100	--	100	--
Solubility in Trichloroethylene, %	T44	D2042	99.5	--	99.5	--	99.5	--	99.5	--
Water, %	T55	D95	--	0.2	--	0.2	--	0.2	--	0.2
GENERAL REQUIREMENT: The material shall not foam when heated to application temperature recommended by the Asphalt Institute.										

* If penetration of residue is more than 200 and ductility at 77°F is less than 100, material will be accepted if ductility at 60°F is 100+

TABLE 5 – UNIFORM PACIFIC COAST SPECIFICATIONS FOR SLOW CURING (MC) LIQUID ASPHALTS

Test	AASHTO Test Method	ASTM Test Method	GRADES							
			SC-70		SC-250		SC-800		SC-3000	
			Min.	Max.	Min.	Max.	Min.	Max.	Min.	Max.
Kinematic Viscosity at 140°F cSt	T201	D2170	70	140	250	500	800	1,600	3,000	6,000
Flash Point (Tag Open Cup), °F*	T48	D1310	150	--	175	--	200	--	250	--
Distillation										
Total Distillate to 680°F, % by volume	T78	D402	10	30	4	20	2	12	--	5
Tests on Residue From Distillation										
Kinematic Viscosity of Distillation Residue at 140°F, stokes	T201	D2170	4	70	8	85	20	140	40	350
Ductility at 77°F, 5cm/min., cm	T51	D113	100	--	100	--	100	--	100	--
Solubility in Trichloroethylene, %	T44	D2042	99.5	--	99.5	--	99.5	--	99.5	--
Water, %	T55	D95	--	0.5	--	0.5	--	0.5	--	0.5

* Flash point by Cleveland Open Cup may be used for products having a flash point greater than 175°F

TABLE 6 – UNIFORM PACIFIC COAST SPECIFICATIONS FOR ANIONIC EMULSIFIED ASPHALTS

Test	AASHTO Test Method	ASTM Test Method	Rapid Setting				Slow Setting			
			RS-1		RS-2		SS-1		SS-1h	
			Min.	Max.	Min.	Max.	Min.	Max.	Min.	Max.
Test on Emulsions										
Viscosity SSF @ 77°F, sec.	T72	D88	20	100	--	--	20	100	20	100
Viscosity SSF @ 122°F, sec.	T72	D88	--	--	75	400	--	--	--	--
Settlement, 5 days, % [1]	T59	D244	--	5	--	5	--	5	--	5
Storage Stability, 1 day, % [2]	T59	D244	--	1	--	1	--	1	--	1
Demulsibility, 35ml .02N, Calcium Chloride. % [3]	T59	D244	60	--	60	--	--	--	--	--
Cement Mixing Test, %	T59	D244	--	--	--	--	--	2.0	--	2.0
Sieve Test, %	D59	D244	--	0.10	--	0.10	--	0.10	--	0.10
Residue by distillation, %	T59	D244	55	--	63	--	57	--	57	--
Test on Residue from Distillation Test [4]										
Penetration @ 77°F, 100g, 5sec.	T49	D5	100	200	100	200	100	200	40	90
Ductility @ 77°F, 5m/min., cm	T51	D113	40	--	40	--	40	--	40	--
Solubility in Trichloroethylene, %	T44	D2042	97.5	--	97.5	--	97.5	--	97.5	--

[1] The test requirement for settlement may be waived when the emulsified asphalt is used in less than 5 days' time, or the purchaser may require that the settlement test be run from the time the sample is received until it is used, if the elapsed time is less than 5 days.
[2] The 24-hour 1-day storage stability test may be used instead of the 5-day settlement test.
[3] The demulsibility test shall be made within 30 days from the date of shipment.
[4] A harder base asphalt meeting current paving asphalt specifications may be specified with the provision that the test requirements on the Residue from Distillation be waived.

TABLE 7 – UNIFORM PACIFIC COAST SPECIFICATIONS FOR CATIONIC EMULSIFIED ASPHALTS

Test	Test Method		Rapid Setting				Medium Setting				Slow Setting				Quick Setting [6]			
			CRS-1		CRS-2		CMS-2S		CMS-2		CMS-2H		CSS-1		CSS-1h		CQS-1h	
	AASHTO	ASTM	Min.	Max.	Min.	Max.	Min.	Max.	Min.	Max.	Min.	Max.	Min.	Max.	Min.	Max.	Min.	Max.
Test on Emulsions																		
Viscosity SSF @ 77°F, sec.	T72	D88	--	--	--	--	--	--	--	--	--	--	20	100	20	100	20	100
Viscosity SSF @ 122°F, sec.	T72	D88	20	100	100	400	50	450	50	450	50	450	--	--	--	--	--	--
Settlement, 5 days, % [1]	T59	D244	--	5	--	5	--	5	--	5	--	5	--	5	--	5	--	5
Storage Stability, 1 day [2]	T59	D244	--	1	--	1	--	1	--	1	--	1	--	1	--	1	--	1
Demulsibility, 35 ml 0.8% sodium dioctyl sulfosuccinate, % [3]	T59	D244	40	--	40	--	--	--	--	--	--	--	--	--	--	--	--	--
Coating Ability/Water Resistance:	T59	D244	--	--	--	--	--	--	--	--	--	--	--	--	--	--	--	--
Coating, dry aggregate			--	--	--	--	Good	--	Good	--	Good	--	--	--	--	--	--	--
Coating, after spraying			--	--	--	--	Fair	--	Fair	--	Fair	--	--	--	--	--	--	--
Coating, wet aggregate			--	--	--	--	Fair	--	Fair	--	Fair	--	--	--	--	--	--	--
Coating, after spraying			--	--	--	--	Fair	--	Fair	--	Fair	--	--	--	--	--	--	--
Particle Charge Test	T59	D244	Positive		Positive		Positive		Positive		Positive		Positive [5]		Positive [5]		Positive	
Sieve Test, %	T59	D244	--	0.10	--	0.10	--	0.10	--	0.10	--	0.10	--	0.10	--	0.10	--	0.10
Cement Mixing Test, %	T59	D244	--	--	--	--	--	--	--	--	--	--	--	2.0	--	2.0	--	--
Distillation																		
Oil Distillate by volume of emulsion, %	T59	D244	--	3	--	3	--	20	--	12	--	12	--	--	--	--	--	--
Residue, %	T59	D244	60	--	65	--	60	--	65	--	65	--	57	--	57	--	60	--
Tests on Residue from Distillate Test [4]																		
Penetration, 77°F, 100g, 5sec.	T49	D5	100	250	100	250	100	250	100	250	40	90	100	250	40	90	45	60
Ductility, 77°F, 5cm/min., cm	T51	D113	40	--	40	--	40	--	40	--	40	--	40	--	40	--	40	--
Solubility in Trichloroethylene, %	T44	D2042	97.5	--	97.5	--	97.5	--	97.5	--	97.5	--	97.5	--	97.5	--	97.5	--

[1] The test requirement for settlement may be waived when the emulsified asphalt is used in less than 5 days' time, or the purchaser may require that the settlement test be run from the time the sample is received until it is used, if the elapsed time is less than 5 days.
[2] The 24-hour 1-day storage stability test may be used instead of the 5-day settlement test.
[3] The demulsibility test shall be made within 30 days from the date of shipment.
[4] A harder base asphalt meeting current paving asphalt specifications may be specified with the provision that the test requirements on the Residue from Distillation be waived.
[5] Must meet a PH requirement of 6.7 maximum (ASTM E70) if the Particle Charge Test result is inconclusive.
[6] Does not apply to polymer modified emulsion.

TABLE 8 – SPECIFICATION FOR SLURRY SEAL MIX

TEST ON MIXTURE	TEST METHOD	REQUIREMENTS
Residual Asphalt, % of dry wt. of aggregate	--	7.5 - 13.5
Consistency, flow	ASTM D3910/ISSA T106	2 - 3 cm
Wet Cohesion, 30-minute set	ISSA T139	12 -13 kg/cm
Wet Cohesion, 60-minute set	ISSA T139	20 - 21 kg/cm
Set Time, 30 minutes	ASTM D3910	Negative
Excess Asphalt by LWT and Sand Adhesion	ASTM T109	50 g/ft² max.
Wet Stripping, % coating	ASTM T114	90 min.
Wet track Abrasion (6-day soak)	ASTM D3910/ISSA T100	75 g/ft² max.
Wet track Abrasion (1-hour soak)	ASTM D3910/ISSA T100	75 g/ft² max.
System Compatibility	ISSA T115	Pass
Mix time @ 77°F	ASTM D3910/ISSA T113	Controllable to 180 sec. minimum

TABLE 9 – SPECIFICATION FOR MICRO-SURFACING MIX

TEST ON MIXTURE	TEST METHOD	REQUIREMENTS
Residual Asphalt, % of dry wt. of aggregate	--	5.5 - 9.5
Wet Cohesion, 30-minute set	ISSA T139	12 kg/cm
Wet Cohesion, 60-minute set	ISSA T139	20 kg/cm
Excess Asphalt by LWT and Sand Adhesion	ISSA T109	50 g/ft² max.
Wet Stripping, % coating	ISSA T114	90 min.
Wet track Abrasion (6-day soak)	ASTM D3910/ISSA T100	75 g/ft² max.
Wet track Abrasion (1-hour soak)	ASTM D3910/ISSA T100	50 g/ft² max.
Mix time @ 77°F	ASTM D3910/ISSA T113	Controllable to 120 sec minimum
Mix time @ 104°F	ASTM D3910/ISSA T113	Controllable to 120 sec minimum
Lateral Displacement	ISSA T147	5% max.
Classification Compatibility	ISSA T144	(AAA, BAA) 11 grade points minimum

Table 10 – SPECIFICATION FOR POLYMER MODIFIED EMULSION MEMBRANE

TEST ON EMULSION	Method	Min.	Max.
VISCOSITY @ 77°F, SSF	ASTM D88	20	100
SIEVE TEST, %	AASHTO T59	--	0.05
24-Hour Storage Stability, % [1]	AASHTO T59	--	1
Residue from Distillation @ 400°F, %	AASHTO T59	63	--
Oil portion from distillation ml of oil per 100 g emulsion [2]	AASHTO T59	63	--
TEST ON RESIDUE FROM DISTILLATION			
Solubility in TCE, % [3]	AASHTO T44	97.5	--
Elastic Recovery @ 50°F, % [4]	AASHTO T301	58	--
Penetration @ 77°F, 100 g, 5 sec, dmm	AASHTO T49	60	150

[1] After standing undisturbed for 24 hours, the surface shall show no white, milky colored substance, but shall be a smooth homogeneous color throughout.

[2] ASTM D244 with modifications to include a 400°F ± 10°F maximum temperature to be held for a period of 15 minutes. Alternatively, ASTM D244 (Sections 21-27) Residue by Evaporation may be utilized as a surrogate procedure. However, Residue by Distillation is preferred and shall be used as the reference procedure.

[3] ASTM D5546, "Standard Test Method for Solubility of Asphalt Binders in Toluene by Centrifuge," may be substituted where polymers block the filter in Method D2042.

[4] ASTM D5976, "Standard Specification for Type I Polymer Modified Asphalt Cement for Use in Pavement Construction," Section 6.2 with exception that the elongation is 20 cm and the test temperature is 50°F.

SECTION 704

BASE AGGREGATES

01 SCOPE

704.01.01 MATERIALS COVERED

A. This specification covers the quality and size of mineral materials used in base courses, trench backfill, or other construction locations.

B. The term Source shall mean any of the following:

1. A permanent commercial location.

2. Contractor manufactured material either commercial or on-site.

704.01.02 REFERENCE CODES AND STANDARDS:

A. Related Interagency Quality Assurance Committee (IQAC) procedures at:

http://www.clarkcountynv.gov/Depts/public_works/construction_mgmt/Pages/Materials.aspx

(IQAC website)

02 REQUIREMENTS

704.02.01 GENERAL

A. The mineral aggregate shall be the crushed and screened product from approved aggregate deposits, except that Type I aggregate base need not be crushed. The Engineer reserves the right to prohibit the use of aggregates from any source when:

1. The character of the material is such, in the opinion of the Engineer, as to make improbable the furnishing of aggregates conforming to the requirements of these specifications.

2. The character of the material is such, in the opinion of the Engineer, that undue additional costs may be accrued by the Contracting Agency.

B. The mineral aggregate shall be clean, hard, durable, free from any frozen lumps, deleterious matter, and harmful adherent coatings. Crushed Portland cement concrete and asphaltic concrete pavement will be permitted, subject to the requirements of these specifications. No materials subject to regulation as hazardous wastes as defined in the Nevada Administrative Code 444.8565 shall be allowed.

704.02.02 IQAC SOURCE QUALIFICATION

A. For expediting of material source and type approvals, a listing of qualified materials has been provided on the IQAC website.

B. Any listed material is considered qualified for use without a material testing submittal. However, this does not relieve the Contractor of project testing of the material as required in these specifications.

C. The IQAC posted materials indicated in Table 1 are subject to reapproval annually for continued posting on the IQAC website. The procedure is annotated in Subsection 704.04.02, "IQAC Annual Material Prequalification."

Table 1 – IQAC Materials that Require Annual Qualification

Type II Aggregate Base
Type II Controlled Low Strength Material (CLSM)

Table 2 – Materials that Require 6-Month Qualification

Type II blended with recycled Portland Cement Concrete

704.02.03 DEFICIENCIES

A. If the product of a deposit is deficient in material passing the No. 16 sieve, filler from other approved deposits may be added at the crushing and screening plants. This is not to be construed as a waiver of any of the requirements contained herein.

03 PHYSICAL PROPERTIES AND TESTS

704.03.01 PLASTIC LIMITS

A. When specified, aggregates shall conform to the applicable requirements of the following table:

Table 3 – Plastic Limits

Percentage by Weight Passing 200 Sieve	Plasticity Index Maximum
0.1 to 3.0	15
3.1 to 4.0	12
4.1 to 5.0	9
5.1 to 8.0	6
8.1 to 11.0	4
11.1 to 15.0	3

704.03.02 DRAIN BACKFILL

A. This aggregate shall conform to the following requirements:

Table 4 – Drain Rock Gradation Acceptance Limits

Sieve Sizes	Percentage by Dry Weight Passing Sieve		
	3-Inch Size	2-Inch Size	3/4-Inch Size
3-Inch	100	--	--
2-Inch	90-100	100	--
1-1/2-Inch	70-100	95-100	--
3/4-Inch	0-50	50-100	100
1/2-Inch	--	--	95-100
3/8-Inch	0-10	0-55	70-100
No. 4	--	0-25	0-70
No. 8	0-5	0-15	--
No. 200	0-3	0-3	0-3

B. Unless otherwise specified in the contract documents, the Contractor may use any of the sizes.

Table 5 – Drain Backfill Durability Acceptance Limits

Source Requirement Test	3-Inch Size	2-Inch Size	3/4-Inch Size
Percentage of Wear (500 Rev.)	45% Maximum	45% Maximum	45% Maximum

704.03.03 TYPE I AGGREGATE BASE

A. This aggregate shall conform to the following requirements:

Table 6 – Type I Gradation Acceptance Limits

Sieve Sizes	Percentage by Dry Weight Passing Sieve	
	3-Inch Size	2-Inch Size
3-Inch	100	--
2-Inch	90-100	100
1-1/2-Inch	--	95-100
1-Inch	--	70-90
No. 4	30-65	30-65
No. 16	15-40	15-40
No. 200	2-12	2-12

Table 7 – Type I Acceptance Limits

Project Control Test	Test Method	Requirements
Sieve Analysis	AASHTO T27	Table 6
Sampling Aggregate from Calibrated Conveyor stream or belt cut[1]	AASHTO T2	--
Plasticity Index	AASHTO T90[2]	Table 3
Liquid Limit	AASHTO T89	35 Maximum
Resistance (R Value)	ASTM D2844	60 Minimum
Percentage of Wear (500 Rev.)	AASHTO T96	45% Maximum

704.03.04 TYPE II AGGREGATE BASE

A. This aggregate shall conform to the following requirements:

Table 8 – Type II Gradation Acceptance Limits

Sieve Sizes	Percentage by Dry Weight Passing Sieve
1-Inch	100
3/4-Inch	90-100
No. 4	35-65
No. 16	15-40
No. 200	2-10

Table 9 – Type II Acceptance Limits

Quality Control Test	Test Method	Requirements
Sieve Analysis	AASHTO T27	Table 8
Sampling Aggregate from Calibrated Conveyor stream or belt cut[3]	AASHTO T2	--
Fractured Faces	Nev. T230	70% Minimum
Plasticity Index	AASHTO T90[4]	Table 3
Liquid Limit	AASHTO T89	35 Maximum
Resistance (R Value) or Resilient Modulus	ASTM D2844	78 Minimum for road base
	AASHTO T307	35,000 psi minimum for road base
Percentage of Wear (500 Rev.)	AASHTO T96	45% Maximum
Total Available Water Soluble Sulfates[5]	ASTM D2791 AWWA 4550 E	Less than 0.3% by dry weight of soil.

1 Sampling from a stockpile permitted only after approval of the Engineer; the conveyor device shall be calibrated every 3 months and record attached to sample document.
2 Test specimens shall be prepared following the dry preparation procedure AASHTO T87.
3 Sampling from a stockpile permitted only after approval of the Engineer; the conveyor device shall be calibrated every 3 months and record attached to sample document.
4 Test specimens shall be prepared following the dry preparation procedure AASHTO T87.
5 Required only for placement around waterline pipe.

B. Type II Plantmix Aggregate as specified in Subsection 705.03.01, "Plantmix and Roadmix Bituminous Base and Surface Aggregate, Types Two Fine and Coarse and Three," may be used in lieu of Type II Base Aggregate as specified above.

704.03.05 TYPE III AGGREGATE

A. The soluble sulfate content shall not exceed 0.3 percent by dry weight of soil. The mineral shall be clean, hard, durable, free from any frozen lumps, deleterious matter, and harmful coatings. In addition thereto, the material shall conform to the gradation requirements of Type II aggregate base in accordance with Subsection 704.03.04, "Type II Aggregate Base," with the following property testing:

Table 10 – Type III Acceptance Limits

Quality Control Test	Test Method	Requirements
Sieve Analysis	AASHTO T27	Table 8
Sampling Aggregate from Calibrated Conveyor stream of belt cut[6]	AASHTO T2	--
Plasticity Index	AASHTO T 90[7]	Table 3
Liquid Limit	AASHTO T 89	35 Maximum
No. 200 Sieve	AASHTO T 27	2-15%
Total Available Water Soluble Sulfates[8]	AWWA 3500-NaD AWWA 4550 E	Less than 0.3% by dry weight of soil

704.03.06 CRUSHED ROCK

A. Crushed rock shall be the product from approved aggregate deposits and shall only be used as directed by the Contracting Agency. The mineral aggregate shall be clean, hard, durable, free from any frozen lumps, deleterious matter, and harmful coatings. In addition thereto, the material shall conform to the following gradation requirements:

Table 11 – Crushed Rock Gradation Acceptance Limits

Sieve Sizes	Percentage of Weight Passing
3/8-Inch	100
No. 4	20-80
No. 200	0-15

6 Sampling from a stockpile permitted only after approval of the Engineer.
7 Test specimens shall be prepared following the dry preparation procedure AASHTO T87.
8 Required only for placement around waterline pipe.

Table 12 – Crushed Rock Acceptance Limits

Quality Control Test	Test Method	Requirements
Sieve Analysis	AASHTO T 27	Table 11
Sampling Aggregate From Calibrated Conveyor stream of belt cut[9]	AASHTO T 2	----------
Fractured Faces	Nev. T 230	90% Minimum
Plasticity Index	AASHTO T 90[10]	Table 3
Liquid Limit	AASHTO T 89	35 Maximum
Percentage of Wear (500 Rev.)	AASHTO T 96	45% Maximum
Total Available Water Soluble Sulfates[11]	AWWA 3500-NaD AWWA 4550 E	Less than 0.3% by dry weight of soil

704.03.07 CONTROLLED LOW STRENGTH MATERIAL (CLSM)

A. CLSM shall consist of a low-strength, self-leveling concrete material composed of various combinations of cement, fly ash, aggregate, water, and chemical admixtures. CLSM shall have a design compressive strength at an age of 28 days within the ranges required below for the specified class:

1. Class I - (50 to 150 psi): Specified where the maximum strength is of primary concern due to the desire to have material that can be excavated in the future with relative ease.

2. Class II – (100 to 300 psi): Specified where the minimum strength is of primary concern for pipe support.

3. Class Special (as shown in project specifications or drawings): Specified where project unique criteria, such as erosion control, are the primary concern.

4. Class I and II CLSM:

   a. The mix shall result in a product having a slump in the range of 6 to 10 inches at the time of placement.

   b. The Source of Contractor shall submit a mix design for approval by the Engineer prior to placement.

   c. The mix design shall be supported by laboratory test data verifying the potential of the mix to comply with the requirements for these specifications.

B. CLSM shall be proportioned in general compliance with the methods outlined in ACI 211.1-91, reapproved 1997, "Standard Practice for Selecting Proportions for Normal, Heavyweight, and Mass Concrete." The following materials shall be used:

---

9 Sampling from a stockpile permitted only after approval of the Engineer; the conveyor device shall be calibrated every 3 months and record attached to sample document.

10 Test specimens shall be prepared following the dry preparation procedure AASHTO T87.

11 Required only for placement around waterline pipe.

1. Cement shall meet the requirements of Section 701, "Hydraulic Cement." Type V cement shall be used unless otherwise specified.

2. Fly ash shall meet the requirements of Section 729, "Fly Ash." Fly ash not meeting the requirements of Section 729, "Fly Ash," may be used if prior testing indicates to the satisfaction of the Engineer the ability of the CLSM with this fly ash to meet these specifications.

3. Water shall meet the requirements of Section 722, "Water."

4. Aggregates shall have 100 percent by total weight of the aggregate passing the 1 inch screen and 15 percent or less passing the No. 200 sieve. The aggregate shall meet the plastic limits requirements of Subsection 704.03.01, "Plastic Limits."

5. Chemical admixtures shall meet the requirements of Subsection 702.03.02, "Air-Entraining Admixtures," and Subsection 702.03.03, "Admixtures Other Than Air-Entraining."

   a. Other admixtures specifically approved for CLSM may be used.

   b. All materials proportions shall be measured and the CLSM mixed in accordance with Section 501, "Portland Cement Concrete."

   c. Other proportion measuring and CLSM mixing systems are acceptable, if control can be demonstrated to be satisfactory to the Engineer.

   d. These other methods include continuous feed, volumetric measurement of proportions, and pug mill and continuous mixing plants.

C. If the CLSM mix does not produce a flowable consistency or exhibits excessive bleeding, the mix shall be adjusted.

1. Excessive bleeding is considered to occur when water flows from the CLSM in a manner that causes disturbance or displacement of the exposed surface of the CLSM.

2. Mix adjustments shall include, but not be limited to: aggregate gradation, cementitious material content, admixtures, water content, or a combination of adjustments.

D. The testing procedures for approval of CLSM mix designs by the IQAC or if required in the contract special provisions shall be as follows:

1. The material Source, which may be the Contractor, shall cast one set of six each 4 inch diameter by 8 inch high specimens in split cylinders.

2. No rodding method shall be used for the placement of the CLSM into the cylinders.

3. All field curing and environmental protection shall conform to AASHTO T23, "Test Methods for Making and Curing Concrete Test Specimens in the Field."

4. The cast specimens shall then be laboratory-cured in a 100 percent humidity, temperature-controlled concrete cure room (cure tanks shall not be used).

5. Compressive strength testing shall be performed in accordance with AASHTO T22 and T23 with samples from each set at the ages of 7, 28, and 90 days.

6. A report of the results shall be submitted to the Engineer.

E. Class Special: The compressive strength testing procedures shall be as specified in the project specifications or on the project drawings.

F. Bonded Aggregate Fill (BAF):

1. This material is a crushed rock-cement slurry consistency.

2. BAF may be used only with the prior approval of the Engineer.

3. The material Source shall have it designed under the responsible charge of a Nevada PE, and the mix shall consist of a gap-graded 1/2 inch maximum nominal size crushed gravel with a 1 sack minimum Type V cement and water slurry.

4. The material shall be plant mixed and placed from a truck.

5. Due to the gap-graded nature of the material, it shall not be used where water drainage is an issue and in all cases shall use dams as specified in Subsection 208.03.16, "Drain Backfill."

6. This procedure does not require concrete cylinder break testing; however, it does require a visual inspection and shall be documented in a report to the Engineer summarizing the inspection to be performed as follows:

a. After the first batch is placed and initially cured, excavate to the bottom of the pipe or structure.

b. If a self-supporting vertical face is maintained, the material is functioning properly.

704.03.08 AGGREGATE FOR PORTLAND CEMENT TREATED BASE

A. This aggregate shall conform to the following requirements:

Table 13 – Portland Cement Treated Base Gradation Acceptance Limits

Sieve Sizes	Percentage by Dry Weight Passing Sieve
3-Inch	100
2-Inch	90-100
No. 4	35-75
No. 200	20

Table 14 – Portland Cement Treated Base Acceptance Limits

Test	Test Method	Requirements
Sieve Analysis	AASHTO T27	Table 13
Sampling Aggregate from Calibrated Conveyor stream or belt cut[12]	AASHTO T2	1/1000 Tons per day or portion thereof
Percentage of Wear (500 Rev.)	AASHTO T96	45% Maximum

B. Aggregate for cement or lime treated bases will be sampled as follows:

1. Where the material is being mixed at a stationary plant, samples will be taken from the conveyors just prior to delivery to the mixer and prior to adding lime or cement.

2. Where material is being mixed on the roadbed, samples will be taken after the material has been placed on the roadbed and processed and prior to adding cement or lime.

704.03.09 SHOULDERING MATERIAL

A. This aggregate shall conform to the following requirements:

Table 15 – Shouldering Material Acceptance Limits

Sieve Sizes	Percentage by Dry Weight Passing Sieve
1-Inch	100
3/4-Inch	90-100
No. 4	35-65
No. 16	15-40
No. 200	2-6

704.03.10 AGGREGATE BASE MATERIAL WITH RECYCLED ASPHALT PAVEMENT (RAP) AND CONCRETE

A. The use of recycled asphalt pavement or recycled concrete for Type II Aggregate Base is permitted with the following requirements:

[12] Sampling from a stockpile permitted only after approval of the Engineer. The conveyor device shall be calibrated every 3 months and record attached to sample document.

1. The material must conform to the requirements of Subsection 704.03.04 “Type II Aggregate Base

2. The maximum ratio of crushed concrete to Type II Aggregate Base is 50%. Recycled materials must be substantially free of foreign matter including but not limited to asphalt, base, dirt, reinforcing steel, and have at most 1.5% deleterious material.

3. The maximum ratio of the crushed recycled asphalt concrete pavement (RAP) to Type II Aggregate Base is 30%. The mean oil content shall be 1.2% with a +0.3% tolerance. The Total Oil Content of the blended material (virgin aggregate and RAP) shall not exceed 1.5%.

B. The maximum qualification period is six (6) months for aggregate base materials blended with recycled aggregates. The entire qualification process must be completed prior to the first day of April and the first day of October of each calendar year. The report format, as outlined in Subsection 704.04.05 “Report Format” shall include the sieve analysis for RAP or recycled concrete stockpile, Blended aggregated, the RAP binder content and blended binder content.

04 SOURCE QUALITY CONTROL TESTING

704.04.01 GENERAL

A. There are 2 testing aspects to Source material acceptance.

1. Testing by the Source for annual posting on the IQAC website of qualified materials.

2. Contractor project quality control Source testing for non-qualified materials.

B. The acceptance of the Source material shall be at the production plant while the acceptance of the Contractor-placed material is at the project site.

C. Any laboratory submitting to an agency shall be R 18 AASHTO accredited in the appropriate test method in accordance with Table 16, "Source Quality Control Testing Requirements," where applicable and testing reviewed and stamped by a Nevada professional engineer who has responsible charge of the work. The use of a professional engineer by the Source could be the Source staff engineer or third party, but the professional engineer must have responsible charge of the testing and/or inspection.

704.04.02 IQAC ANNUAL MATERIAL PREQUALIFICATION

A. Each individual location or "pit" shall be referred to as a "Source." The responsibility for testing and inspection is the material Source. Material shall be tested, inspected, and certified in accordance with Table 16 "Source Quality Control Testing Requirements." The Source shall submit to the IQAC agency engineer assigned for that Source. The reviewing agency is listed on the IQAC website page next to the Source material.

B. Test data shall be included with the certifying document.

C. The maximum qualification period is 1 year, or 6 months for aggregate blended with crushed concrete. The entire qualification process shall be completed, in accordance with the sections above, prior to the first day of April, or for aggregates blended with crushed concrete, the first day of April and the first day of October of each year. This includes, but is not limited to, submittal, agency review, all required retesting, and qualification from the IQAC member.

704.04.03 NON-PREQUALIFIED MATERIALS

A. If the material is not posted on the IQAC web page, the Source may elect to submit non-prequalified material to the Engineer for approval prior to use that complies with the above noted specification and shall have been tested within 60 days of the intended use.

704.04.04 SUBMITTAL

A. All tests specified in this section shall be performed.

1. The report(s) shall include any graphical representation of plotted data such as the R value or the Proctor value(s) along with the pit name and location.

2. The most current ASTM, AASHTO, NDOT, and AWWA methods shall be used when performing the tests.

B. All samples shall be "cut" from the "belt." When circumstances do not allow for sampling during production, the Source shall coordinate with the Engineer to identify an alternative plan for sampling.

C. IQAC Annual Submittal

1. For the purposes of IQAC submittal, the Engineer is the IQAC reviewing agency as noted on the IQAC web page.

2. For the annual submittal by the supplier, the material to be approved for use as aggregate shall be obtained and "split" by an AASHTO accredited laboratory with the Engineer present at the time the sample is obtained with the sample large enough for a full suite of testing for the Source and Engineer.

3. The Engineer shall be notified a minimum of 48 hours prior to obtaining the sample.

4. If the Engineer is not present during the sampling of the material, the results for that sample will not be accepted.

5. Sampling shall be performed during normal working hours for the Engineer.

6. If the Source laboratory results are in compliance with the above noted specifications, Source shall submit the test report to the Engineer within 21 days of sampling requesting the review and approval of the materials for the proposed use of the material.

7. Notification by the Source of samples not in compliance with the above noted specifications is requested but not required. Samples without notification or a qualification submittal within the 21 day period will be assumed by the IQAC to be outside the above noted specifications.

8. The agency Engineer for a particular pit may accommodate minor adjustments for "tuning" of an operation. This courtesy shall not be extended during the qualification process.

D. Non-prequalified materials (materials not posted on the IQAC list)

1. The material to be approved for use as aggregate shall be obtained and "split" by an AASHTO accredited laboratory with the Engineer present at the time the sample is obtained with the sample large enough for a full suite of testing for the Source and Engineer.

a. The Engineer shall be notified a minimum of 48 hours prior to obtaining the sample.

b. If the Engineer is not present during the sampling of the material, the results for that sample will not be accepted.

c. Sampling shall be performed during normal working hours for the Engineer.

d. If the Source laboratory results are in compliance with the above noted specifications, the Source shall submit the test report to the Engineer within 21 days of sampling with a letter requesting the review and approval of the materials report for the proposed use of the material.

2. Notification by the Source of samples not in compliance with the above noted specifications is requested but not required.

a. Samples without notification or a qualification submittal within the 21 day period will be assumed by the IQAC to be outside the above noted specifications.

b. The Source shall submit the material test report to the Engineer no earlier than 60 days and no later than 14 days prior to use.

3. The qualification is for one project only.

704.04.05 REPORT FORMAT

A. The report shall be prepared and stamped by, or under the direction of, a professional engineer registered in the State of Nevada. The report shall be on the standard IQAC form and shall include the pit name and location. The report shall include the following:

1. Recommendation by the Source Professional Engineer.

2. The testing results in accordance with the appropriate Table 16, "Source Quality Control Testing Requirements," test methods and reporting requirements, along with any graphs and charts.

B. When "no exceptions" are taken, a conditional posting on the web site will be provided by the IQAC within 10 days of the receipt of the submittal.

C. Discrepancies between test results will be reviewed on a case-by-case basis. The Engineer will notify the aggregate producer of substantial test variations within 10 days of receipt of the qualification submittal.

704.04.06 SAMPLING AND TESTING

A. When the Contractor/Material Source or Engineer acquires aggregate samples at an aggregate production plant, the plant shall provide a calibrated mechanical means for obtaining samples.

1. If a mechanical means is not provided, a belt cut from a stopped conveyor will be required.

2. Any mechanical sampling device shall be approved by the Engineer prior to starting the respective phase of the project, or shall have been approved as part of a prior plant inspection by the Engineer or the Engineer’s representative.

3. The sampling device shall be so constructed to provide for simultaneous "cutting" of the entire section of material being discharged or conveyed, and so constructed that small representative samples may be taken frequently and these samples combined to form the complete sample.

4. The reference method for the mechanical procedure shall be a "belt cut" sample taken from a stopped conveyor belt.

5. Samples of the finished product of the plant shall be obtained prior to or as the material leaves the conveyor belt for the bin or stockpile.

B. Test results run from samples taken will be furnished to the Engineer by the Contractor or the Contractor's representative. The results of such tests shall not be the basis for final acceptance of the material.

C. Sampling for final acceptance of materials will be as required in the appropriate USS sections and in general shall comply with the AASHTO requirements, where applicable, and with any exception to the method(s) listed on the IQAC website.

Table 16 – Source Quality Control Testing Requirements[13]

Spec Section	Description	Item	Reference Specification and/or Test Procedure	Frequency
704.03.02, ***704.03.03***, ***704.03.04***, ***704.03.08***	Drain Rock	Submittal	IQAC and/or Agency Requirements	Annually for IQAC Source Approval OR per project
	Type I, Type II Aggregate	Sampling from calibrated conveyor stream or belt cut	AASHTO T2	1/day at plant
	Cement treated base	Sieve Analysis	AASHTO T11 & T27	1/day at plant
		Percentage of Wear (500 Rev.)	AASHTO T96	Annually for Source Approval OR per project
704.03.04, ***704.03.05***, ***704.03.06***	Drain rock, Type II, and Type III aggregate around water pipe	Total Available Water Soluble Sulfates[14]	AWWA 3500-NaD AWWA 4550 E	1/month at plant
704.03.03, ***704.03.04***	Type I and Type II Aggregate	Plasticity Index	AASHTO T90[15]	1/day at plant
		Liquid Limit	AASHTO T89	1/day at plant
		Resistance (R Value) or Resilient Modulus	ASTM D2844	Annually for IQAC Source Qualification OR per project
			AASHTO T307	Annually for IQAC Source Qualification OR per project
704.03.07	CLSM	Mix Design	***USS 704.03.07***	Annually for IQAC Source Qualification OR per project
		Compressive Strength	***USS 208.02.07*** & AASHTO T22, T23	Annually for IQAC Source Qualification OR per project
	CLSM-BAF	Visual Inspection Report	**USS *208.02.07* Split cylinders**	Annually for IQAC Source Qualification OR per project

13 Review the IQAC website for any exceptions to the listed test methods.
14 Required only for placement around waterline pipe.
15 Test specimens shall be prepared following the dry preparation procedure AASHTO T87.

SECTION 705

AGGREGATES FOR BITUMINOUS COURSES

01 SCOPE

705.01.01 MATERIALS COVERED

A. This specification covers the quality and size of local mineral materials and commercial mineral fillers used in bituminous base and surface courses.

02 REQUIREMENTS

705.02.01 GENERAL

A. The mineral aggregate shall be the crushed and screened product of approved deposits.

B. The Engineer reserves the right to prohibit the use of aggregates from any source when:

1. The character of the material is such, in the opinion of the Engineer, as to make improbable the furnishing of aggregates conforming to these specifications; or

2. The character of the material is such, in the opinion of the Engineer, that undue additional costs may be accrued by the Contracting Agency; or

3. The maximum allowable water absorption of either coarse or fine aggregate exceeds 2.5 percent when tested in accordance with ASTM C127 (coarse aggregate) and ASTM C128 (fine aggregate).

C. The mineral aggregate shall be clean, hard, durable, and free from frozen lumps, deleterious matter, and harmful adherent coatings.

D. When producing plantmix aggregate, all natural fines passing the No. 4 sieve shall be screened from the coarse aggregate and may be reintroduced into the mix at a rate not to exceed 20 percent by dry weight of the combined aggregates.

E. The natural fines may be used only when all applicable mix design criteria have been met.

705.02.02 DEFICIENCIES

A. If the product of any deposit is deficient in the fraction passing the No. 50 sieve, additional filler from other approved deposits meeting the physical requirements may be added.

B. The added material shall be fed to the drier in a uniform manner from a separate stockpile.

C. If the added material is a commercial mineral filler, it shall be uniformly fed directly to the plant. This shall not be construed as a waiver of any of the requirements contained herein.

03 PHYSICAL PROPERTIES AND TESTS

705.03.01 PLANTMIX AND ROADMIX BITUMINOUS BASE AND SURFACE AGGREGATE, TYPES TWO FINE AND COARSE AND THREE

A. The aggregate shall conform to this subsection.

B. Test specimens shall be prepared following dry preparation procedure described in ASTM D4318, Section 10.2 through Section 10.2.5.

TABLE 1 – PLANTMIX AND ROADMIX AGGREGATE GRADATION

Sieve Sizes	Percent By Weight Passing Sieve		
	Type 2 Coarse Arterials	Type 2 Fine Residential/Collector	Type 3
1-Inch	100	100	--
3/4-Inch	84-97	90-100	--
1/2-Inch	66-82	78-94	100
3/8-Inch	56-72	68-84	90-100
No. 4	35-50	50-65	55-85
No. 8	23-38	30-49	32-67
No. 50	5-19	7-25	7-27
No. 200	2-7	2-9	2-10

TABLE 2 – PLANTMIX AND ROADMIX AGGREGATE SPECIFICATIONS

Project Tests	Test Methods	Requirements
Sieve Analysis	AASHTO T27	Above
Sampling Aggregate	ASTM D75	--
Fractured Faces	NEV. T230	Traffic Category I: 90% Minimum (2 fractures minimum) 95% Minimum (1 fracture minimum)
		Traffic Category II: 35% Minimum (2 Fractures minimum)
Plasticity Index	ASTM D4318	All Traffic Categories: 6 Maximum
Liquid Limit	ASTM D4318	All Traffic Categories: 35 Maximum
Methylene Blue Test	AASHTO TP57	10 Maximum
Fine Aggregate Angularity	AASHTO T33	Traffic Category I: 45%

Source Tests	Test Methods	Requirements
Stripping Test	ASTM D1664	Satisfactory
Percentage of Wear (500 Rev.)	ASTM C131	All Traffic Categories: 35% Maximum
Elongation @ 5:1	ASTM D4791	Traffic Category I: 10% Maximum
Soundness Test	ASTM C88	All Traffic Categories: 8% Maximum
Deleterious Materials	ASTM C142	All Traffic Categories: 0.3% Maximum

705.03.02 BLANK

705.03.03 PLANTMIX BITUMINOUS OPEN-GRADED SURFACE AGGREGATE

A. The aggregate shall conform to the following requirements:

TABLE 3 – OPEN GRADE AGGREGATE GRADATION

Sieve Sizes	Percentage By Weight Passing Sieve
1/2-Inch	100
3/8-Inch	90-100
No. 4	35-55
No. 8	5-15
No. 200	0-3

TABLE 4 – OPEN GRADE AGGREGATE SPECIFICATIONS

Project Tests	Test Methods	Requirements
Sieve Analysis	AASHTO T27	Above
Sampling Aggregate	ASTM D75	--
Fractured Faces	NEV. T230	90% Minimum (2 fractures minimum)

Source Tests	Test Methods	Requirements
Percentage of Wear (500 Rev.).	ASTM C131	37% Maximum

705.03.04 COMMERCIAL MINERAL FILLER

A. Commercial mineral filler shall conform to ASTM C977 for quicklime, ASTM C1097 for hydrated lime, and ASTM D3910 and ASTM D242 for slurry seal and microsurfacing.

B. Sampling of the mineral aggregate and mineral filler shall conform to AASHTO T2/ASTM D75 methods.

1. All aggregate shall be from the same source.

2. No field blending will be allowed.

C. When tested according to the following tests, the mineral aggregate shall meet the following requirements:

TABLE 5 – MINERAL FILLER AGGREGATE GRADATION

Property	Test Method	Specification
Sand Equivalent	AASHTO T176/ ASTM D2419	50 Minimum for Slurry and 65 Minimum for Microsurfacing
Plasticity Index	ASTM D4318	NP
Soundness, %	AASHTO T104/ ASTM C88	15 Maximum (using NA_2SO_4)
Abrasion Resistance, %	AASHTO T96/ ASTM C131	30 Maximum. Abrasion test shall be run on the aggregate before it is crushed.

705.03.05 SCREENINGS

A. The screenings shall conform to the following requirements:

TABLE 6 – SCREENINGS GRADATION

Sieve Sizes	Percentage By Weight Passing Sieve	
	1/2-Inch	3/8-Inch
1/2-Inch	100	--
3/8-Inch	90-100	100
No. 4	15-35	20-45
No. 16	0-4	0-6
No. 200	0-2	0-2

TABLE 7 – SCREENINGS SPECIFICATIONS

Project Tests	Test Methods	Requirements
Sieve Analysis	AASHTO T27	Above
Sampling Aggregate	ASTM D75	--
Fractured Faces	NEV. T230	90% Minimum (2 fractures minimum)

Source Tests	Test Methods	Requirements
Percentage of Wear (500 Rev.)	ASTM C131	37% Maximum

705.03.06 SAND BLOTTER

A. The sand shall conform to the following requirements:

TABLE 8 – SAND BLOTTER GRADATION

Sieve Sizes	Percentage By Weight Passing Sieve
1/2-Inch	100
No. 4	90-100
No. 16	30-75
No. 200	0-12

TABLE 9 – SAND BLOTTER SPECIFICATIONS

Project Tests	Test Methods	Requirements
Sieve Analysis	AASHTO T27	Above
Sampling Aggregate	ASTM D75	--
Organic Impurities	ASTM C40	--

TABLE 10 – ISSA, TYPE I GRADATION

Sieve Size	Mix Design Range (Percentage By Weight Passing Each Sieve)	Stockpile Tolerance
3/8-Inch	100	0
No. 4	100	0
No. 8	90-100	±5%
No. 16	65–90	±3%
No. 30	40-65	±3%
No. 50	25-42	±3%
No. 100	15-30	±2%
No. 200	10-20	±2%

TABLE 11 – ISSA, TYPE II GRADATION

Sieve Size	Mix Design Range (Percentage By Weight Passing Each Sieve)	Stockpile Tolerance
3/8-Inch	100	0
No. 4	90-100	±5%
No. 8	65-90	±5%
No. 16	45-70	±3%
No. 30	30-50	±3%
No. 50	18-30	±3%
No. 100	10-21	±2%
No. 200	5-15	±2%

TABLE 12 – ISSA, TYPE III GRADATION

Sieve Size	Mix Design Range (Percentage By Weight Passing Each Sieve)	Stockpile Tolerance
3/8-Inch	100	0
No. 4	70-90	±5%
No. 8	45-70	±5%
No. 16	28-50	±3%
No. 30	19-34	±3%
No. 50	12-25	±3%
No. 100	7-18	±2%
No. 200	7-15	±2%

705.03.07 SET CONTROL ADDITIVES

A. The type and quantity of additives in slurry seal and microsurfacing mix shall be determined by the material mix design and conform to the applicable sections of ASTM D3910 and ISSA T102.

705.03.08 PLANTMIX AND ROADMIX ASPHALT CONCRETE SURFACE COURSE UTACS TYPE S1 THROUGH S3

A. The Ultrathin Asphalt Concrete Surface (UTACS) shall use one of the gradation types listed below as required by the Engineer.

Table 13 – Ultrathin Asphalt Concrete Surface (UTACS) Gradations

Sieve Size	Type S1	Type S2	Type S3	Tolerance
3/4-Inch[1]	--	--	100	--
1/2-Inch	--	100	85-100	±6
3/8-Inch	100	85-100	60-80	±6
No. 4	40-55	22-40	22–38	±4
No. 8	19-32	19-32	19-32	±4
No. 16	15-25	15-23	15-23	±3
No. 30	10-18	10-18	10-18	±3
No. 50	8-13	8-13	8-13	±3
No. 100	6-10	6-10	6-10	±3
No. 200	4-7	4-7	4-7	±2

B. Coarse aggregate testing shall comply with Table 2. Coarse aggregate is defined as aggregate that is retained on and above the No. 4 sieve.

Table 14 – UTACS Coarse Aggregate Specifications

Tests	Method	Limit
Los Angeles abrasion value, % loss	AASHTO T96	35 Maximum
Soundness, % loss	AASHTO T104	18 Maximum
Magnesium Sulfate or Sodium Sulfate	AASHTO T104	12 Maximum
Flat & Elongated Ratio, % @ 3:1	ASTM D4791	25 Maximum
% Crushed, single face	ASTM D5821	95 Minimum
% Crushed, Two or more Mechanically crushed faces	ASTM D5821	85 Minimum
Micro-Deval, % loss	AASHTO TP58	18 Maximum

C. For the Los Angeles abrasion value, the values shown for these tests are targets for aggregate selection purposes. The results of these tests should not be the sole basis for rejection.

D. Fine aggregate testing shall comply with Table 3.

Table 15 – UTACS Fine Aggregate Specifications

Tests	Method	Limit
Sand Equivalent	AASHTO T176	45 minimum
Methylene Blue (on materials passing 200)	AASHTO TP57	10 maximum
Uncompacted Void Content	AASHTO T304	40 minimum

E. Values for sand equivalent shown for these tests are targets for aggregate selection purposes. If the finished bituminous mixture passes the AASHTO T283 requirement in the Mix Design section, the sand equivalent and methylene blue requirements may be waived.

ATTACHMENT 12-1
CONSTRUCTION CLOSURE TABLES

This page intentionally left blank.

Table 12-1 Permitted Construction Closures During Peak Periods and Off-Peak Periods

I-15 Southbound						
Permitted Closure Number	**Limits**		**Travel Lanes (1)**	**Travel Lanes (2)**	**Construction Closure Requirement**	**Allowable Construction Work Activity**
1-15SB	US 95	Alta Drive	3	0	A maximum of two Construction Closures. Work shall be performed beginning no earlier than 10:00 PM Friday and end no later than 5:00 AM Monday.	Construction Work to erect the new H-3055 Bridge over the I-15 Southbound lanes.
2-15SB	D Street	Alta Drive	3	2	A maximum of two Construction Closure with a duration not to exceed a cumulative of 450 total days. Construction Closure shall begin no earlier than Tuesday proceeding the NASCAR Special Event and end no later than November 15th of the current year.	No limitations.
	Alta Drive	2400' south of Sahara Ave	4	3		

(1) The minimum number of travel lanes to be open to traffic at all time during the Construction Work unless specified as a Permitted Construction Closure. The minimum number includes auxiliary lanes between ramps but does not include parallel ramps.

(2) The minimum number of travel lanes to be open to traffic at all time during the Construction Work for the Permitted Construction Closures. The minimum number does not include auxiliary lanes between ramps or parallel ramps.

Table 12-2 Permitted Construction Closures During Peak Periods and Off-Peak Periods

I-15 Northbound						
Permitted Closure Number	**Limits**		**Travel Lanes (1)**	**Travel Lanes (2)**	**Construction Closure Requirement**	**Allowable Construction Work Activity**
1-15NB	2400' south of Sahara Ave	Alta Drive	5	3	A maximum of two Construction Closures with a duration not to exceed a cumulative of 450 total days. Construction Closure shall begin no earlier than Tuesday proceeding the NASCAR Special Event and end no later than November 15th of the current year.	No limitations.
	Alta Drive	Symphony Park Ave	5	2		
	Symphony Park Ave	D Street Exit	3	2		
2-15NB	Symphony Park Ave	US 95	3	2	A maximum of two Construction Closures. Work shall be performed beginning no earlier than 10:00 PM Friday and end no later than 5:00 AM Monday. A minimum of 3 lanes shall be open to traffic for all other hours.	Construction Work to erect the new H-3055 Bridge over the I-15 Southbound lanes.

(1) The minimum number of travel lanes to be open to traffic at all time during the Construction Work unless specified as a Permitted Construction Closure. The minimum number includes auxiliary lanes between ramps but does not include parallel ramps.

(2) The minimum number of travel lanes to be open to traffic at all time during the Construction Work for the Permitted Construction Closures. The minimum number does not include auxiliary lanes between ramps or parallel ramps.

Table 12-3 Permitted Construction Closures During Peak Periods and Off-Peak Periods

Permitted Closure Number	Limits		Travel Lanes (1)	Travel Lanes (2)	Construction Closure Requirement	Allowable Construction Work Activity
US 95 Eastbound						
1-95EB	Martin Luther King Blvd	I-15	3	0	A maximum of eight Construction Closures. Work shall be performed beginning no earlier than 10:00 PM Friday and end no later than 5:00 AM Monday.	Construction Work to erect the new H-3055 Bridge over the US 95 eastbound lanes and Construction Work to erect the new I-937 Bridge over the US 95 east bound lanes.
2-95EB	Rancho Drive	Martin Luther King Blvd	4	2	A maximum of three Construction Closures with a duration not to exceed a cumulative of 300 days total.	No limitations.
	Martin Luther King Blvd	I-15	3	2		
US 95 Westbound						
1-95WB	I-15	Martin Luther King Blvd	3	0	A maximum of six Construction Closures. Work shall be performed beginning no earlier than 10:00 PM Friday and end no later than 5:00 AM Monday.	Construction Work to erect the new I-937 Bridge over the US 95 westbound lanes.
2-95WB	I-15	Martin Luther King Blvd	3	2	A maximum of three Construction Closures with a duration not to exceed a cumulative of 300 days total.	No limitations.
	Martin Luther King Blvd	Rancho Drive	4	2		

(1) The minimum number of travel lanes to be open to traffic at all time during the Construction Work unless specified as a Permitted Construction Closure. The minimum number includes auxiliary lanes between ramps but does not include parallel ramps.

(2) The minimum number of travel lanes to be open to traffic at all time during the Construction Work for the Permitted Construction Closures. The minimum number does not include auxiliary lanes between ramps or parallel ramps.

Table 12-4 Permitted Construction Closures During Peak Periods and Off-Peak Periods

I-15 and US 95/I-515 System Interchange Ramps						
Permitted Closure Number	**Directional Movement**		**Travel Lanes (1)**	**Travel Lanes (2)**	**Construction Closure Requirement**	**Allowable Construction Work Activity**
1-NE Ramp	NB I-15	EB US 95 / I-515	2	0	A maximum of one Construction Closure not to exceed a duration of 30 consecutive days.	Construction Work to demolish and erect the northbound H-936N grade separation structure.
1-WS Ramp	WB US 95 / I-515	SB I-15	2	0	A maximum of one Construction Closure not to exceed a duration of 30 consecutive days.	Construction Work to erect the southbound I-2138 grade separation structure.
1-SW Ramp	SB I-15	WB US 95	1	0	A maximum of three Construction Closures with a duration not to exceed a cumulative of180 days total.	No limitations.
1-SE Ramp	SB I-15	EB US 95/I-515	1	0	A maximum of one Construction Closure not to exceed a duration of 30 consecutive days. The exit ramp to MLK from the SE Ramp maybe closed as part of this Construction Closure.	No limitations.
1-EN Ramp	EB US 95	NB I-15	2	0	A maximum of four Construction Closures with a duration not to exceed a cumulative of 300 days total. The entrance ramp from MLK to the EN Ramp maybe closed as part of this Construction Closure.	No limitations.
1-NW Ramp	NB I-15	WB US 95	2	1	A maximum of one Construction Closure not to exceed a duration of120 consecutive days.	No limitations.

Table 12-4 Permitted Construction Closures During Peak Periods and Off-Peak Periods

I-15 and US 95/I-515 System Interchange Ramps						
1-ES Ramp	EB US-95	SB- I-15	2	1	A maximum of one Construction Closure not to exceed a duration of120 consecutive days.	Construction Work to widen bridge I-2139.
1-WN Ramp	WB US-95/I-515	NB- I-15	1	0	A maximum of one Construction Closure not to exceed a duration of 30 consecutive days.	No limitations.
(1) The minimum number of travel lanes to be open to traffic at all time during the Construction Work unless specified as a Permitted Construction Closure. (2) The minimum number of travel lanes to be open to traffic at all time during the Construction Work for the Permitted Construction Closures.						

Table 12-5 Permitted Construction Closures During Peak Periods and Off-Peak Periods

Interchange Ramps						
Permitted Closure Number	**Route**	**Movement**	**Travel Lanes (1)**	**Travel Lanes (2)**	**Construction Closure Requirement**	**Allowable Construction Work Activity**
1-R	I-15 SB	SB I-15 exit ramp to Spring Mountain Road	2	1	A maximum of three Construction Closures with a duration not to exceed a cumulative of 60 days total.	No limitations.
2-R	I-15 SB	Sahara Ave entrance ramp to SB I-15	2	1	A maximum of two Construction Closures with a duration not to exceed a cumulative of 150 days total.	No limitations.
3-R	I-15 SB	SB I-15 exit ramp to Sahara Ave, includes all three connecting ramps.	2	0	A maximum of one Construction Closures not to exceed a duration of 10 consecutive days. Construction Closures shall begin no earlier than Tuesday proceeding the NASCAR Special Event and end no later than November 15th of the current year.	Sound Walls and Pavement
4-R	I-15 SB	SB I-15 exit ramp to Sahara Ave includes all three connecting ramps.	2	1	A maximum of two Construction Closures with a duration not to exceed a cumulative of 150 days total. Access to eastbound and westbound Sahara Avenue shall be open to traffic at all times.	No limitations.
5-R	I-15 SB	Charleston Blvd entrance ramp to SB I-15	1	0	A maximum of three Construction Closures with a duration not to exceed a cumulative of 200 days total.	No limitations.
6-R	I-15 SB	SB I-15 exit ramp to Charleston Blvd	1	0	If the Construction Work for the new HOV direct local street connection (Neon Gateway) is complete, Design-Builder may utilize the new Neon Gateway access for temporary ramp access to Charleston Boulevard. The temporary access including left-hand exit and	No limitations.

Table 12-5 Permitted Construction Closures During Peak Periods and Off-Peak Periods

Interchange Ramps						
Permitted Closure Number	**Route**	**Movement**	**Travel Lanes (1)**	**Travel Lanes (2)**	**Construction Closure Requirement**	**Allowable Construction Work Activity**
					entrances may be utilized during the Construction Work for Charleston Boulevard ramps. A maximum of three Construction Closures with a duration not to exceed a cumulative of 200 days total.	
7-R	I-15 SB	D St entrance ramp to SB I-15	1	0	A maximum of three Construction Closures with a duration not to exceed a cumulative of 125 days total.	No limitations.
8-R	I-15 SB	SB I-15 exit ramp to D St/Washington Ave	1	0	A maximum of three Construction Closures with a duration not to exceed a cumulative of 125 days total.	No limitations.
9-R	I-15 NB	Spring Mountain Road entrance ramp to NB I-15	1	0	A maximum of three Construction Closures with a duration not to exceed a cumulative of 60 days total.	No limitations.
10-R	I-15 NB	NB I-15 exit ramp to Sahara Ave	2	1	A maximum of three Construction Closures with a duration not to exceed a cumulative of 150 days total.	No limitations.
11-R	I-15 NB	Sahara Ave entrance ramp to NB I-15	3	1	A maximum of three Construction Closures with a duration not to exceed a cumulative of 150 days total.	No limitations.
12-R	I-15 NB	NB I-15 exit ramp to Charleston EB	1	0	A maximum of three Construction Closures with a duration not to exceed a cumulative of 200 days total.	No limitations.
13-R	I-15 NB	NB I-15 exit ramp to Charleston Blvd WB	1	0	If the Construction Work for the new HOV direct local street connection (Neon Gateway) is complete, Design-Builder may utilize the new Neon Gateway	No limitations.

Table 12-5 Permitted Construction Closures During Peak Periods and Off-Peak Periods

Interchange Ramps						
Permitted Closure Number	**Route**	**Movement**	**Travel Lanes (1)**	**Travel Lanes (2)**	**Construction Closure Requirement**	**Allowable Construction Work Activity**
					access for temporary ramp access Charleston Boulevard. The temporary access including left-hand exit and entrances may be utilized during the Construction Work for Charleston Boulevard ramps A maximum of three Construction Closure with a duration not to exceed a cumulative of 200 days total.	
14-R	I-15 NB	Charleston Blvd entrance ramp to NB I-15	2	0	If the Construction Work for the new HOV direct local street connection (Neon Gateway) is complete, Design-Builder may utilize the new Neon Gateway access for temporary ramp access to Charleston Boulevard. The temporary access including left-hand exit and entrances may be utilized during the Construction Work for Charleston Boulevard ramps. A maximum of three Construction Closure with a duration not to exceed a cumulative of 200 days total.	No limitations.
15-R	NB I-15	NB I-15 exit ramp to Martin Luther King Blvd	1	0	A maximum of six Construction Closures not to exceed a duration of 2 consecutive days per Construction Closure.	Construction Work to erect the new I-938 Bridge over the N I-15 to MLK Ramp.
16-R	NB I-15	NB I-15 exit ramp to Martin Luther King Blvd	1	0	A maximum of three Construction Closures with a duration not to exceed a cumulative of 125 days total.	No limitations
17-R	NB I-15	NB I-15 exit ramp to D St	1	0	A maximum of three Construction Closures with a duration not to exceed a cumulative of 125 days total.	No limitations.

Table 12-5 Permitted Construction Closures During Peak Periods and Off-Peak Periods

Interchange Ramps						
Permitted Closure Number	**Route**	**Movement**	**Travel Lanes (1)**	**Travel Lanes (2)**	**Construction Closure Requirement**	**Allowable Construction Work Activity**
18-R	NB I-15	D St/Washington Ave entrance ramp to NB I-15	2	1	A maximum of three Construction Closures with a duration not to exceed a cumulative of 125 days total.	No limitations.
19-R	US 95 EB	Valley View Blvd entrance ramp to EB US 95	1	0	A maximum of two Construction Closures with a duration not to exceed a cumulative of 60 days total.	No limitations.
20-R	US 95 EB	EB US 95 exit ramp to Rancho Dr	1	0	A maximum of three Construction Closures with a duration not to exceed a cumulative of 125 days total.	No limitations.
21-R	US 95 EB	Rancho Dr entrance ramp to EB US 95	1	0	A maximum of three Construction Closures with a duration not to exceed a cumulative of 125 days total.	No limitations.
22-R	US 95 EB	Rancho Dr entrance ramp to SB I-15 (ES Ramp)	1	0	A maximum of three Construction Closures with a duration not to exceed a cumulative of 125 days total.	No limitations.
23-R	US 95 EB	EB US 95 to SB I-15 (ES Ramp) exit ramp to Martin Luther King Blvd	1	0	A maximum of three Construction Closures with a duration not to exceed a cumulative of 125 days total.	No limitations.
24-R	US 95 EB	Martin Luther King Blvd entrance ramp to SB I-15 (ES Ramp)	1	0	A maximum of three Construction Closures with a duration not to exceed a cumulative of 125 days total.	No limitations.
25-R	US 95 EB	Martin Luther King Blvd entrance ramp to EB US 95 / I-515	1	0	A maximum of three Construction Closures with a duration not to exceed a cumulative of 150 days total.	No limitations.

Table 12-5 Permitted Construction Closures During Peak Periods and Off-Peak Periods

Interchange Ramps						
Permitted Closure Number	**Route**	**Movement**	**Travel Lanes (1)**	**Travel Lanes (2)**	**Construction Closure Requirement**	**Allowable Construction Work Activity**
26-R	US 95 EB	EB US 95 exit ramp to N Casino Center Blvd	1	0	A maximum of two Construction Closures with a duration not to exceed a cumulative of 60 days total.	No limitations.
27-R	US 95 EB	EB US 95 exit ramp to Las Vegas Blvd	1	0	A maximum of two Construction Closures with a duration not to exceed a cumulative of 60 days total.	No limitations.
28-R	US 95 EB	Las Vegas Blvd entrance ramp to EB US 95	1	0	A maximum of two Construction Closures with a duration not to exceed a cumulative of 60 days total.	No limitations.
29-R	US 95 WB	WB US 95 exit ramp to Valley View Blvd	1	0	A maximum of two Construction Closures with a duration not to exceed a cumulative of 60 days total.	No limitations.
30-R	US 95 WB	Rancho Dr entrance ramp to WB US 95	2	1	A maximum of three Construction Closures with a duration not to exceed a cumulative of 125 days total.	No limitations.
31-R	US 95 WB	WB US 95 exit ramp to Rancho Dr	1	0	A maximum of three Construction Closures with a duration not to exceed a cumulative of 125 days total.	No limitations
32-R	US 95 WB	Martin Luther King Blvd entrance ramp to WB US 95 / I-515	1	0	A maximum of three Construction Closures with a duration not to exceed a cumulative of 125 days total.	No limitations.
33-R	US 95 WB	WB US 95 exit ramp to Martin Luther King Blvd	1	0	A maximum of three Construction Closures with a duration not to exceed a cumulative of 125 days total.	No limitations.

Table 12-5 Permitted Construction Closures During Peak Periods and Off-Peak Periods

Interchange Ramps						
Permitted Closure Number	**Route**	**Movement**	**Travel Lanes (1)**	**Travel Lanes (2)**	**Construction Closure Requirement**	**Allowable Construction Work Activity**
34-R	US 95 WB	N Casino Center Blvd entrance ramp to WB US 95	1	0	A maximum of two Construction Closures with a duration not to exceed a cumulative of 60 days total.	No limitations.
35-R	US 95 WB	Las Vegas Blvd entrance ramp to WB US 95	1	0	A maximum of two Construction Closures with a duration not to exceed a cumulative of 60 days total.	No limitations.
36-R	US 95 WB	WB US 95 exit ramp to Las Vegas Blvd	1	0	A maximum of two Construction Closures with a duration not to exceed a cumulative of 60 days total.	No limitations.

(1) The minimum number of travel lanes to be open to traffic at all time during the Construction Work unless specified as a Permitted Construction Closure.

(2) The minimum number of travel lanes to be open to traffic at all time during the Construction Work for the Permitted Construction Closures.

Table 12-6 Permitted Construction Closures During Peak Periods and Off-Peak Periods

Permitted Closure Number	Limits		Travel Lanes (1)	Travel Lanes (2)	Construction Closure Requirement	Allowable Construction Work Activity
Martin Luther King Boulevard (Northbound and Southbound)						
1-MLK	Oakey Blvd	Las Vegas Fire Rescue Station 10		0	A maximum of three Construction Closure with a duration not to exceed a cumulative of 120 days total.	No limitations.
2-MLK	Charleston Blvd	Pinto Ln		0	A maximum of three Construction Closure with a duration not to exceed a cumulative of 420 days total. From Pinto Lane to Charleston Boulevard not inclusive of the Pinto Lane intersection. The Pinto Lane intersection shall remain open to traffic at all times.	No limitations.
3-MLK	Las Vegas Fire Rescue Station 10	Charleston Blvd		1	A maximum of one Construction Closure not to exceed a duration of 30 consecutive days.	No limitations.
4-MLK	Alta Drive	Bonanza Rd		1	A maximum of three Construction Closures with a duration not to exceed a cumulative of 300 days total.	No limitations.
5-MLK	Mineral Avenue	Bonanza Rd		0	A maximum of two Construction Closures. Work shall be performed beginning no earlier than 10:00 PM Friday and end no later than 5:00 AM Monday.	Demolition of existing bridges.
Desert Lane (3) (Northbound and Southbound)						
1-DL	Pinto Ln	Hastings Ave		0	A maximum of two Construction Closures not to exceed a duration of 60 consecutive days.	No limitations.
Pinto Ln (Eastbound and Westbound)						
1-PL	Martin Luther King Blvd	Desert Ln		0	A maximum of two Construction Closures not to exceed a duration of 60 consecutive days.	No limitations.

Table 12-6 Permitted Construction Closures During Peak Periods and Off-Peak Periods

Permitted Closure Number	Limits		Travel Lanes (1)	Travel Lanes (2)	Construction Closure Requirement	Allowable Construction Work Activity
Wall St (3) (Eastbound and Westbound)						
1-WS	Western Ave	Martin Luther King Blvd		0	A maximum of three Construction Closure with a duration not to exceed a cumulative of 210 days total.	No limitations.
Sahara Avenue (Westbound)						
1-SA	Rancho Dr	Western Ave		2	A maximum of one Construction Closures not to exceed a duration of 30 consecutive days.	No limitations.
Charleston Boulevard (Eastbound and Westbound)						
1-CH	Shadow Lane	Main St		2	A maximum of three Construction Closures with a duration not to exceed cumulative 150 days total.	No limitations.
2-CH	Desert Lane	Grand Central Parkway		0	A maximum of two Construction Closures. Work shall be performed beginning no earlier than 10:00 PM Friday and end no later than 5:00 AM Monday.	Demolition of existing bridges.
Grand Central Parkway (Northbound and Southbound)						
1-GP	Charleston Blvd	LV Premium Outlet Dr		2	A maximum of three Construction Closures with a duration not to exceed a cumulative 60 days total.	No limitations.
Alta Drive / Bonneville Avenue (Eastbound and Westbound)						
1-AB	Shadow Lane	Grand Central Parkway		1	A maximum of three Construction Closures with a duration not to exceed a cumulative 150 days total.	No limitations.
2-AB	Martin Luther King Blvd	Las Vegas Premium Outlet Intersection		0	A maximum of two Construction Closures. Work shall be performed beginning no earlier than 10:00 PM Friday and end no later than 5:00 AM Monday.	Demolition of existing bridges.

Table 12-6 Permitted Construction Closures During Peak Periods and Off-Peak Periods

Permitted Closure Number	Limits		Travel Lanes (1)	Travel Lanes (2)	Construction Closure Requirement	Allowable Construction Work Activity
Symphony Avenue (Eastbound and Westbound)						
1-SY	Martin Luther King Blvd	Grand Central Parkway		1	A maximum of three Construction Closures with a duration not to exceed a cumulative 150 days total.	No limitations.
2-SY	Martin Luther King Blvd	Grand Central Parkway		0	A maximum of two Construction Closure not to exceed a duration of 60 consecutive days.	No limitations.
Oakey Boulevard / Wyoming Avenue (Eastbound and Westbound)						
1-OW	Ivanhoe Way	Martin Luther King Blvd		1	A maximum of four Construction Closures with a duration not to exceed a cumulative 120 day total.	No limitations.
	Martin Luther King Blvd	Western Ave		1		
2-OW	Martin Luther King Blvd	Western Ave		0	A maximum of two Construction Closures. Work shall be performed beginning no earlier than 10:00 PM Friday and end no later than 5:00 AM Monday.	Demolition of existing bridges.

(1) The minimum number of travel lanes per direction of travel to be open to traffic at all time during the Construction Work unless specified as a Permitted Construction Closure shall meet or exceed the existing number of lanes as of the Setting Date.

(2) The minimum number of travel lanes per direction of travel to be open to traffic at all time during the Construction Work for the Permitted Construction Closures.

(3) Streets will be permanently closed after Construction Closure to accommodate new Local Agency Infrastructure.

ATTACHMENT 14-1
BRIDGE REHABILITATION WORK

This page intentionally left blank.

Summary of Bridge Rehabilitation Work

			Assumed Quantities							
		Item No.	1	2	3	4	5	6	7	8
		Description	Concrete Bridge Deck Repair	Bridge Deck Preparation	Thin Bonded Multilayer Overlay	Replace Strip Seal Expansion Joint Gland	Replace Expansion Joint Headers and Strip Seal Assembly	Replace Pourable Joint Seal	Replace Relief Joint Seal	Barrier Rail Removal & Replacement
Loc No.	Bridge No.	Structure Name / Unit	SQFT	SQYD	SQYD	LINFT	LINFT	LINFT	LINFT	LINFT
1	I-2139R	MLK ramp to I15S (over MLK)	798	1,773	1,773	27 (1)				
2	I-2139	US95 SB ramp to I15S (over MLK)	2,938	6,529	6,529	195 (2)			39 (3)	7
3	I-940	I15N to US95N flyover	4,682	10,403	10,403				70 (4)	
4	I-2141	I15S to US95E flyover	2,578	5,729	5,729	27 (5)			54 (6)	
5	I-2141R	I15S to US95W (over ramp)	510	1,133	1,133					
6	I-940R	I15N to MLK flyover	2,357	5,238	5,238					
7	G-941R	US95 NB ramp to I15N (over RR)	247	548	548					
8	G-941L	I15 SB ramp to US95/MLK (over RR)	365	810	810		125 (7)		37 (8)	
9	I-939	US95N to I15S flyover	3,681	8,179	8,179					
10	I-2138	I15N/S (over US95E to I15N ramp)	1,070	2,377	2,377				300 (7)	
11	H-946	I515N(US95N) over F St.	1,079	2,397	2,397			518 (9)		
12	H-946R	US95N ramp to I15S (over F St.)	302	672	672					
13	I-837	I15N/S over Sahara	2,245	4,988	4,988	92 (10)				
14	I-837R	I15S to Sahara E flyover	2,853	6,340	6,340					
15	I-2482	I15S to Sahara E tulip ramp	417	927	927					
		Rounded Totals:	**26,200**	**58,100**	**58,100**	**350**	**130**	**520**	**500**	**10**

Notes:

1. Replace gland at east abutment (4" movement).
2. Replace glands at all 5 joints (5" movement).
3. At Abutment 2.
4. At Abutment 1.
5. At Abutment 2 (4" movement).
6. At Abutments 1 and 2.
7. At North and South Abutments.
8. At South Abutment.
9. Remove and replace at all joints.
10. At Abutment 2 of Northbound I-15 (3" movement).

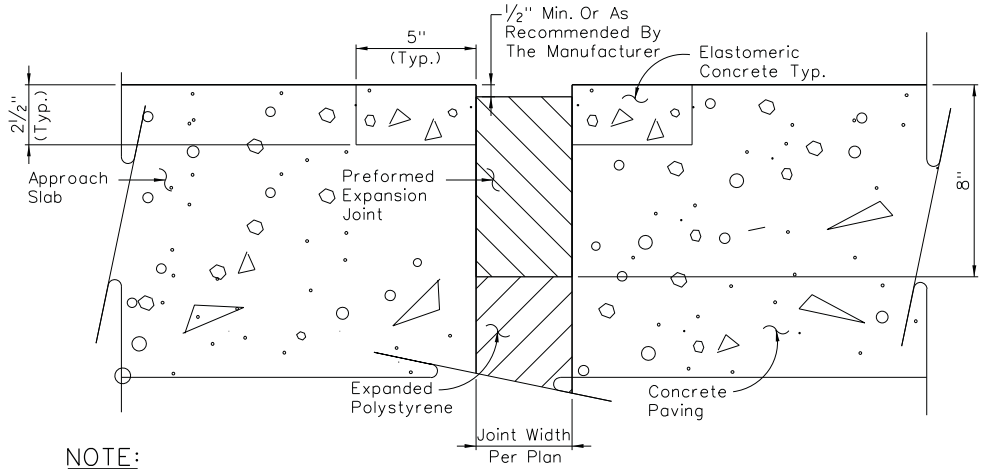

NOTE:

Maintain Joint Gap Between Bridge Rail And Barrier Rail When Applicable. Install Joint Filler Up Interior Face Of Rail A Minimum Of 6".

RELIEF JOINT

NEVADA DEPARTMENT OF TRANSPORTATION

RELIEF JOINT

Signed Original On File		
CHIEF BRIDGE ENGINEER	ADOPTED	REVISION

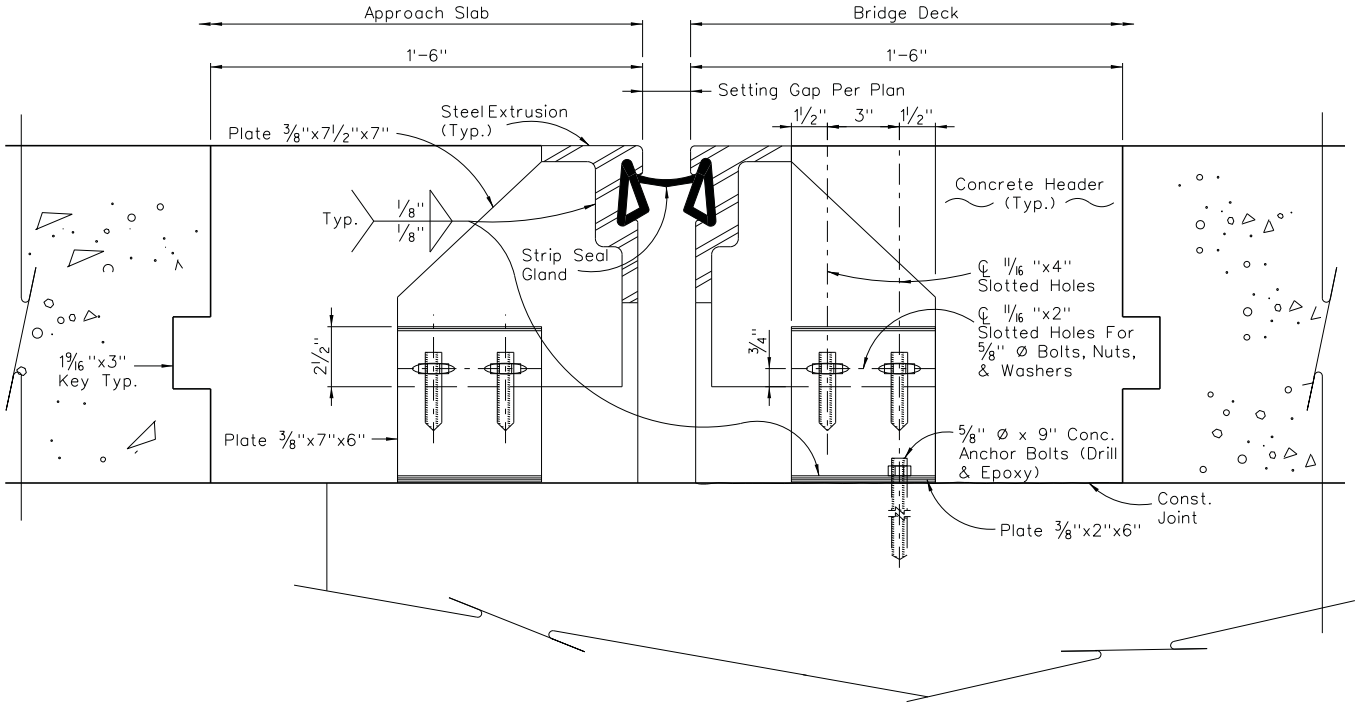

STRIP SEAL EXPANSION JOINT ASSEMBLY

NEVADA DEPARTMENT OF TRANSPORTATION

STRIP SEAL
EXPANSION JOINT

Signed Original On File		
CHIEF BRIDGE ENGINEER	ADOPTED	REVISION

This page intentionally left blank.

ATTACHMENT 19-1
STANDARD DRAWINGS FOR ITS POLES, CABINETS, CONDUITS, PULL BOXES, AND COUNT STATION LOOPS

This page intentionally left blank.

ATTACHMENT 21-1
PROJECT ROW ACCESS DATES AND CONSTRAINTS

This page intentionally left blank

Attachment 21-1 Table 1

Revised 6/8/15

NDOT PARCEL NO.	PHYSICAL ADDRESSS	Delivery Date	Ownership	Demolition Package / Status
041.855	1000 Desert Lane	Available (3)	NDOT (Soriano)	
041.854	1001 Desert Lane	Available (3)	NDOT (Hawk)	DEMO PKG C - dirt lot
041.756	1001 Shadow Lane	3/31/2016	Board of Regents (UNLV)	
041.756TE	1001 Shadow Lane	3/31/2016	Board of Regents (UNLV)	
041.844	1006 Desert Lane	Available (3)	NDOT (Old Lighthouse LLC)	
041.843	1007 Desert Lane	3/31/2016	Danisi	
041.834	1010 Desert Lane	Available (3)	NDOT (Trocio)	
041.833	1011 Desert Lane	Available (3)	NDOT (Dechavez)	DEMO PKG C - dirt lot
041.823	1016 Desert Lane	1/4/2016	NDOT (Pinto)	DEMO PKG C - dirt lot
041.822	1017 Desert Lane	Available (3)	NDOT (ARLT)	
041.801	1020 Desert Lane	3/31/2016	Peaceful Sundays Trust	
041.811	1021 Desert Lane	Available (3)	NDOT (Leh)	
041.800	1025 Desert Lane	Available (3)	NDOT (Hawley)	DEMO PKG C - dirt lot
041.790	1031 Desert Lane	Available (3)	NDOT (Tim Weaver LLC)	DEMO PKG C - dirt lot
041.704	1109 Western	1/4/2016	NDOT (Zetocka/Lush)	DEMO PKG C-1 - foundation/asphalt lot
041.616	1111 Desert	Available (3)	NDOT (Highland 1980)	DEMO PKG C - foundation/asphalt lot
041.616	1112 S MLK	Available (3)	NDOT (Highland 1980)	DEMO PKG C - foundation/asphalt lot
041.691	1115 Western	1/4/2016	Billboard on P1 Parcel	
041.691	1115 Western	1/4/2016	NDOT (Zetocka/Lush)	DEMO PKG C-1 - foundation/asphalt lot
041.616	1117 Desert	Available (3)	NDOT (Highland 1980)	DEMO PKG C - foundation/asphalt lot
041.616	1124 S MLK	Available (3)	NDOT (Highland 1980)	DEMO PKG C - foundation/asphalt lot
041.616	1128 S MLK	Available (3)	NDOT (Highland 1980)	DEMO PKG C - foundation/asphalt lot
041.616	1130 S MLK	Available (3)	NDOT (Highland 1980)	DEMO PKG C - foundation/asphalt lot
041.512	1200 S MLK	Available (3)	NDOT (Highland 2000)	DEMO PKG C - foundation/asphalt lot
041.559	1205 Charmast	Available (3)	NDOT (Eiler)	DEMO PKG B - dirt lot
041.541	1209 Charmast	Available (3)	NDOT (Nelson)	DEMO PKG A - dirt lot
041.523	1213 Charmast	Available (3)	NDOT (Chen)	DEMO PKG B - dirt lot
041.491	1217 Richard Ct	Available (3)	NDOT (Rachiel)	DEMO PKG B - dirt lot

Attachment 21-1 Table 1

Revised 6/8/15

NDOT PARCEL NO.	PHYSICAL ADDRESSS	Delivery Date	Ownership	Demolition Package / Status
041.508	1221 Richards Ct	Available (3)	NDOT (Medina)	DEMO PKG C-1 - dirt lot
041.481	1225 Richard Ct	Available (3)	NDOT (Ziehm)	DEMO PKG B - dirt lot
041.443	Western Ave	1/4/2016	LV GOLF and COUNTRY CLUB & TANG, LLC,	
041.443	Western Ave	1/4/2016	LV GOLF and COUNTRY CLUB & TANG, LLC,	
041.548	1230 Western	1/4/2016	LV GOLF and COUNTRY CLUB	
041.543	1290 Western	1/4/2016	LV GOLF and COUNTRY CLUB	
041.543	1408 Western	1/4/2016	LV GOLF and COUNTRY CLUB	
041.543	1410 Western	1/4/2016	LV GOLF and COUNTRY CLUB	
041.543	1414 Western	1/4/2016	LV GOLF and COUNTRY CLUB	
041.460	1301 Richard Ct	Available (3)	NDOT (Gaucin)	DEMO PKG B - dirt lot
041.454	1305 Richard Ct	Available (3)	NDOT (Dine Trust)	DEMO PKG B - dirt lot
041.455	1309 Richard Ct	Available (3)	NDOT (Gibson)	DEMO PKG C - dirt lot
041.410	1404 S Martin L King Blvd	6/15/2016	Jackson	
041.410TE	1404 S Martin L King Blvd	6/15/2016	Jackson	
041.757	1500 W Charleston Blvd	Available (3)	NDOT (Herbst)	DEMO PKG C - dirt lot
041.420	1500 Western Ave	2/28/2017	Grant	
041.344	1501 S Martin L King Blvd	Available (3)	Agreement with City of Las Vegas	
041.344TE	1501 S Martin L King Blvd	Available (3)	Agreement with City of Las Vegas	
041.708	1501 W Charleston	Available (3)	NDOT (Towne)	DEMO PKG B - foundation/asphalt lot
041.708	1505 W Charleston	Available (3)	NDOT (Towne)	DEMO PKG B - foundation/asphalt lot
041.880	1508 Hastings Ave	Available (3)	NDOT (Hooper)	DEMO PKG C - dirt lot
041.881	1512 Hastings Ave	Available (3)	NDOT (ARLT)	
041.324	1514 Western Ave	2/28/2017	Grant	
041.386	1515 Western	Available (3)	NDOT (Valdez)	
041.386TE	1515 Western	Available (3)	NDOT (Valdez)	
041.882	1516 Hastings Ave	Available (3)	NDOT (Tanha/Springbok)	DEMO PKG C - dirt lot
041.576	1520 Ellis	Available (3)	NDOT (Key Foundation)	DEMO PKG B - dirt lot
041.883	1522 Hastings Ave	Available (3)	NDOT (ARLT Properties)	

Attachment 21-1 Table 1

Revised 6/8/15

NDOT PARCEL NO.	PHYSICAL ADDRESSS	Delivery Date	Ownership	Demolition Package / Status
041.761	1522 W Charleston Blvd	10/1/2016	John Charleston (Carl's Jr.)	
041.570	1524 Ellis	Available (3)	NDOT (Kimrey)	DEMO PKG C - dirt lot
041.190	1601 W Oakey Blvd	11/4/2016	The Southland Corp. (7/11)	
041.190PE	1601 W Oakey Blvd	11/4/2016	The Southland Corp. (7/11)	
041.190TE	1601 W Oakey Blvd	11/4/2016	The Southland Corp. (7/11)	
041.236	1602 W Oakey Blvd	2/28/2017	MVR	
041.236PE	1602 W Oakey Blvd	2/28/2017	MVR	
041.236TE	1602 W Oakey Blvd	2/28/2017	MVR	
041.111	1701 Loch Lomond	Available (3)	NDOT (Fannie Mae)	DEMO PKG C - dirt lot
041.084	1705 Loch Lomond	Available (3)	NDOT (Vinas)	DEMO PKG A - dirt lot
041.071	1709 Loch Lomond	Available (3)	NDOT (Moore)	DEMO PKG A - dirt lot
041.110	1712 Highland Ave	4/7/2017	O'Rourke	
041.110PE	1712 Highland Ave	4/7/2017	O'Rourke	
041.110TE	1712 Highland Ave	4/7/2017	O'Rourke	
041.058	1713 Loch Lomond	Available (3)	NDOT (Sorrels)	DEMO PKG C - dirt lot
041.044	1717 Loch Lomond	Available (3)	NDOT (Marsh)	DEMO PKG A - dirt lot
041.040	1721 Loch Lomond Way	Available (3)	NDOT (Shurtz)	DEMO PKG C - dirt lot
041.027	1725 Loch Lomond Way	Available (3)	LOCH LOMOND WAY TRUST	
041.014	1729 Loch Lomond Way	Available (3)	LOCH LOMOND TRUST	
041.001	1733 Loch Lomond Way	Available (3)	NDOT (Clemenson Family Trust)	
041.091	1750 Highland Ave	4/7/2017	TNT, O'Rourke	
041.091PE	1750 Highland Ave	4/7/2017	TNT, O'Rourke	
041.091TE	1750 Highland Ave	4/7/2017	TNT, O'Rourke	
040.988	1801 Loch Lomond Way	Available (3)	NDOT (Torres)	DEMO PKG C - dirt lot
040.975	1805 Loch Lomond Way	Available (3)	NDOT (Schmidt)	DEMO PKG C - dirt lot
040.962	1809 Loch Lomond Way	Available (3)	NDOT (Sedlmeyer)	DEMO PKG C - dirt lot
040.936	1817 Loch Lomond Way	Available (3)	NDOT (Jaros)	DEMO PKG C - dirt lot
040.923	1821 Loch Lomond Way	Available (3)	NDOT (Favela)	DEMO PKG C - dirt lot

Attachment 21-1 Table 1

Revised 6/8/15

NDOT PARCEL NO.	PHYSICAL ADDRESSS	Delivery Date	Ownership	Demolition Package / Status
040.910	1825 Loch Lomond Way	Available (3)	NDOT (LOCH LOMOND IRREV TRUST)	
040.896	1901 Loch Lomond Way	Available (3)	1901 LOCH LOMOND TRUST	
040.883	1905 Loch Lomond Way	Available (3)	NDOT (Mc Kinley)	DEMO PKG C - dirt lot
040.864	1909 Loch Lomond Way	Available (3)	NDOT (Mc Knight)	DEMO PKG C - dirt lot
040.844	1913 Loch Lomond Way	Available (3)	NDOT (Flower Trust)	DEMO PKG C - dirt lot
041.054	1914 Highland Ave	4/7/2017	Pueblo	
041.054PE	1914 Highland Ave	4/7/2017	Pueblo	
041.054TE	1914 Highland Ave	4/7/2017	Pueblo	
041.036	1916 Highland Ave	4/7/2017	1916 Highland	
041.036PE	1916 Highland Ave	4/7/2017	1916 Highland	
041.036TE	1916 Highland Ave	4/7/2017	1916 Highland	
041.017	1918 Highland Ave	4/7/2017	Ferris	
041.017PE	1918 Highland Ave	4/7/2017	Ferris	
041.017TE	1918 Highland Ave	4/7/2017	Ferris	
040.998	1920 Highland Ave	4/7/2017	TNT O'Rourke	
040.998PE	1920 Highland Ave	4/7/2017	TNT O'Rourke	
040.998TE	1920 Highland Ave	4/7/2017	TNT O'Rourke	
040.980	2000 Highland Ave	4/7/2017	Ferris	
040.980	2000 Highland Ave	4/7/2017	Ferris	
040.980PE	2000 Highland Ave	4/7/2017	Ferris	
040.980TE	2000 Highland Ave	4/7/2017	Ferris	
040.961	2056 Highland Ave	4/7/2017	TBS Highland Properites	
040.961PE	2056 Highland Ave	4/7/2017	TBS Highland Properites	
040.961TE	2056 Highland Ave	4/7/2017	TBS Highland Properites	
042.503	275 S. MLK	Available (3)	NDOT (Public Storage)	DEMO PKG A - foundation/asphalt lot
042.395	301 S MLK	1/4/2016	United Landco	
042.395TE	301 S MLK	1/4/2016	United Landco	
042.437	301 S MLK	1/4/2016	United Warehouse Investments	

Attachment 21-1 Table 1

Revised 6/8/15

NDOT PARCEL NO.	PHYSICAL ADDRESSS	Delivery Date	Ownership	Demolition Package / Status
042.437TE	301 S MLK	1/4/2016	United Warehouse Investments	
041.693	301 W. Charleston	Available (3)	NDOT (Ellingham)	DEMO PKG A - foundation/asphalt lot
041.709	305 W. Charleston	Available (3)	NDOT (SUH)	DEMO PKG A - foundation/asphalt lot
041.692	307 W. Charleston	Available (3)	NDOT (Gendall)	DEMO PKG A - foundation/asphalt lot
041.560	319 Wall st	Available (3)	NDOT (Wall Street)	
041.665	322 Wall	Available (3)	NDOT (Marshall)	DEMO PKG A - foundation/asphalt lot
042.340	351 S. MLK	Available (3)	NDOT (Storage Equitites)	DEMO PKG A - foundation/asphalt lot
042.241	400 S Martin L King Blvd	1/4/2017	Co of Clark (HQ Metro LLC)	
042.241TE1	400 S Martin L King Blvd	1/4/2017	Co of Clark (HQ Metro LLC)	
042.241TE2	400 S Martin L King Blvd	1/4/2017	Co of Clark (HQ Metro LLC)	
042.301	407 S MLK	Available (3)	NDOT (Fitzhouse Enterprises, Inc.)	
041.563	415 Wall	Available (3)	NDOT (Smith Family Trust)	
042.263	417 S. MLK	Available (3)	MLK ALTA	DEMO PKG A - dirt lot
042.263	433 S. MLK	Available (3)	MLK ALTA	DEMO PKG A - dirt lot
042.193	500 S Martin L King Blvd	1/4/2016	NDOT (Simon)	
042.187	501 S MLK	Available (3)	NDOT (Sanders/Jenkins)	
042.139	510 S Martin L King Blvd	1/1/2017	MARTIN RENTALS	
042.135	515 Desert Lane	10/1/2016	Desert Alta, LLC	
042.118	525 Desert Lane	Available (3)	NDOT (Golden Rainbow)	
042.110	531 Desert Lane	Available (3)	NDOT (Santos/Wescom Central Credit U)	DEMO PKG C - dirt lot
042.134	541 S MLK	Available (3)	NDOT (Etor)	
042.112	550 S Martin L King Blvd	10/1/2016	Reich Series	
042.092	600 S Martin L King Blvd	Available (3)	NDOT (All-City)	DEMO PKG C - dirt lot
042.089	601 Desert Lane	Available (3)	NDOT (Champaneri)	DEMO PKG C - dirt lot
042.071	610 S Martin L King Blvd	Available (3)	NDOT (Menkel)	
042.069	611 Desert Lane	Available (3)	NDOT (KMT Properties)	
042.051	630 S Martin L King Blvd	Available (3)	NDOT (Suzuki)	
042.059	631 Desert Lane	Available (3)	NDOT (AOWREO, LLC)	DEMO PKG C - dirt lot

Attachment 21-1 Table 1

Revised 6/8/15

NDOT PARCEL NO.	PHYSICAL ADDRESSS	Delivery Date	Ownership	Demolition Package / Status
042.049	641 Desert Lane	Available (3)	NDOT(Flush Investments)	
042.039	651 Desert Lane	Available (3)	NDOT (651 Desert Lane)	DEMO PKG C - dirt lot
042.028	661 Desert Lane	Available (3)	NDOT (Naito/Chanpaibool)	
041.995	670 S Martin L King Blvd	10/1/2016	Capri Village	
042.007	671 Desert Lane	Available (3)	NDOT (Menkel)	
041.997	691 Desert Lane	6/4/2016	NDOT (Deleon)	
041.964	700 S Martin L King Blvd	10/1/2016	Robarts	
041.966	701 Desert Lane	10/1/2016	Robarts 1981	
042.709PE	73 S Martin L King Blvd	11/4/2016	MLK Furniture Plaza	
042.709TE	73 S Martin L King Blvd	11/4/2016	MLK Furniture Plaza	
041.935	800 S Martin L King Blvd	10/1/2016	Ranch	
041.937	801 Desert Lane	10/1/2016	Ranch Properties	
041.925	900 S Martin L King Blvd	Available (3)	NDOT (Valdez)	
041.923	901 Desert Lane	Available (3)	NDOT (Castillo)	
041.916	910 S Martin L King Blvd	Available (3)	NDOT (Valdez)	
041.912	911 Desert Lane	Available (3)	NDOT (Higher Ground/RRR Homes, LLC)	
041.897	920 S Martin L King Blvd	1/4/2016	NDOT (Carroll)	
041.901	921 Desert Lane	Available (3)	NDOT (Higher Ground/Store House Homes)	
041.879	940 S Martin L King Blvd	Available (3)	NDOT (Fulstone)	DEMO PKG C - dirt lot
041.766	952 W Charleston	Available (3)	NDOT (Las Vegas Group)	
042.166TE	Alta Drive	10/1/2016	Martin Rentals	
042.225	Alta Drive & S MLK	10/1/2016	Union Pacific Land Resources Corp	
042.218	Alta Drive & S MLK	Available (3)	Agreement with City of Las Vegas	
042.275PE	Bonneville Avenue	Available (3)	NDOT (WMCV)	
042.248	Bonneville Avenue	Available (3)	NDOT(UPRR)	
041.736	Charleston	Available (3)	Agreement with City of Las Vegas	
041.500	Desert Lane	Available (3)	NDOT (Catello)	DEMO PKG C - foundation/asphalt lot
041.760	Desert Lane & Hastings Ave	Available (3)	QUITCLAIM, Agreement with CLV	

Attachment 21-1 Table 1

Revised 6/8/15

NDOT PARCEL NO.	PHYSICAL ADDRESSS	Delivery Date	Ownership	Demolition Package / Status
040.949	1813 Loch Lomond Way	Available (3)	NDOT (Youmas)	DEMO PKG C - dirt lot
041.189		6/15/2016	Su Lisa 2005 Revocable Trust	
041.189TE		6/15/2016	Su Lisa 2005 Revocable Trust	
041.247	1700 Silver Ave	6/15/2016	Trustee Clark County Treasurer	
041.247TE	1700 Silver Ave	6/15/2016	Trustee Clark County Treasurer	
041.309	1515 S Martin L King Blvd	6/15/2016	Trustee Clark County Treasurer	
041.309TE	1515 S Martin L King Blvd	6/15/2016	Trustee Clark County Treasurer	
042.276TE	World Market Center Driveway	10/1/2016	World Market Center LLC	
041.573PE	N/A	10/1/2016	Union Pacific Railroad Company	
041.573TE1	N/A	10/1/2016	Union Pacific Railroad Company	
041.573TE2	N/A	10/1/2016	Union Pacific Railroad Company	
041.275	No address	10/1/2016	Trustee Clark County Treasurer	
041.275TE	No address	10/1/2016	Trustee Clark County Treasurer	
041.137	Oakey	Available (3)	Agreement with City of Las Vegas	
041.137PE	Oakey	Available (3)	Agreement with City of Las Vegas	
041.898	Pinto Lane & Alleys	Available (3)	Agreement with City of Las Vegas	
042.179	Portion 541 S. mlk	1/4/2016	Clear Channel	
041.473	Richards Ct	Available (3)	Agreement with City of Las Vegas	
041.176	S Highland Avenue	Available (3)	Agreement with City of Las Vegas	
041.271	S MLK	Available (3)	NDOT (Marlon Family Trust)	
041.752	South MLK	Available (3)	NDOT (UPRR)	
042.617	Symphony Park Avenue	1/4/2016	MLK Spur LLC	
041.202	W Oakey Blvd	Available (3)	Agreement with City of Las Vegas	
041.675	Western Ave	Available (3)	Agreement with City of Las Vegas	
041.953TE		Available (3)	Clark County	
041.664	Western Ave	Available (3)	NDOT (Refrigeration)	
041.505	Western Ave	1/4/2016	Sharples	
041.505TE	Western Ave	1/4/2016	Sharples	

Attachment 21-1 Table 1

Revised 6/8/15

NDOT PARCEL NO.	PHYSICAL ADDRESSS	Delivery Date	Ownership	Demolition Package / Status
041.128		Available (3)	NDOT (Georgescu)	
041.128TE		Available (3)	NDOT (Georgescu)	
041.112		1/31/2017	Roundy Revocable Family Trust	
041.112TE		1/31/2017	Roundy Revocable Family Trust	
042.619	Symphony Park Avenue	Available (3)	Agreement with City of Las Vegas	
042.634		1/14/2017	TNP 121 S. Martin Luther King Blvd	
042.597TE		1/14/2017	TNP 121 S. Martin Luther King Blvd	
Notes:				

1. This is not prioritized list
2. This list is based on NDOT base design construction phasing
3. Parcels designated Available can be accessed beginning on the Effective Date as defined in the Contract

Attachment 21-1 Table 2

6/8/2015

Count	Station Beginning	Station Ending	Owner	NDOT Parcel No.	APN	Physical Address	Reason
1	"Le" 799+67.90 Lt.	"Le" 800+29.49 Lt.	FIRST PRESBYTERIAN CHURCH	041.593TE3	162-04-510-004	1515 W CHARLESTON BLVD	DRIVEWAY
	"Le" 792+82.32 Lt.	"Le" 794+36.58 Lt.	FIRST PRESBYTERIAN CHURCH	041.593TE1	162-04-510-004	1515 W CHARLESTON BLVD	DRIVEWAY
	"Le" 796+65.72 Lt.	"Le" 797+26.86 Lt.	FIRST PRESBYTERIAN CHURCH	041.593TE2	162-04-510-004	1515 W CHARLESTON BLVD	DRIVEWAY
	"Le" 792+44.61 Lt.	"Le" 792+96.47 Lt.	FIRST PRESBYTERIAN CHURCH	041.593TE1	162-04-510-005	1608 ELLIS AVE	DRIVEWAY
2	"Le" 811+91.08 Lt.	"Le" 813+96.72 Lt.	CLARK COUNTY HEALTH DISTRICT	041.955TE	139-33-402-031	700 DESERT LN	DRIVEWAY
3	"Le" 813+96.66 Lt.	"Le" 818+20.58 Lt.	DESERT LANE LLC	041.993TE	139-33-305-022	640 DESERT LN	DRIVEWAY
4	"Le" 818+19.95 Lt.	"Le" 819+76.78 Lt.	PINTO LANE LLC	042.070TE	139-33-305-021	1525 PINTO LN	DRIVEWAY
5	"Le" 808+45.43 Lt.	"Le" 809+15.44 Lt.	AMALGAMATED INVESTMENTS TRUST	041.891TE	139-33-402-028	926 DESERT LN	DRIVEWAY
6	"Le" 809+15.43 Lt.	"Le" 809+84.15 Lt.	GOLD STAR	041.904TE	139-33-402-024	922 DESERT LN	DRIVEWAY
7	"Le" 826+05.40 Lt.	"Le" 826+34.74 Lt.	MARTIN RENTALS	042.166TE	139-33-306-001	501 DESERT LN	SIDEWALK
8	"Le" 778+57.38 Rt.	"Le" 783+89.48 Rt.	GRANT PROPERTIES LV LLC	041.324TE	162-04-602-010	1514 WESTERN AVE	CONTROL OF ACCESS FACILITY
9	"Le" 783+89.48 Rt.	"Le" 785+01.95 Rt.	GRANT A.G. & J.M. TRUSTEES	041.420TE	162-04-602-011	1500 WESTERN AVE	CONTROL OF ACCESS FACILITY

Notes:

1. Refer to Technical Provisions Section 21.6 (*Department-Provided Property and Project ROW Access*) for additional information regarding permission to construct.

This page intentionally left blank

ATTACHMENT 21-2
CITY OF LAS VEGAS PROJECT ROW ACCESS DATES AND CONSTRAINTS

This page intentionally left blank

Attachment 21-2
CLV Acquisition Schedule

Revised 6/8/15

CLV PARCEL NO.	APN	NDOT Stationing	TYPE	PHYSICAL ADDRESSS	Delivery Date	Ownership
F1	162-04-606-003	"Le" 785+25.70 Rt. To "Le" 787+33.33 Rt.	Commercial	1550 Industrial Road	1/1/2018	Industrial Road Real Est. LLC
TE1	162-04-606-003	"Le" 785+14.37 Rt. To "Le" 787+10.21 Rt.	Commercial	1550 Industrial Road	1/1/2018	Industrial Road Real Est. LLC
F2	162-04-606-004	"Le" 784+67.76 Rt. To "Le" 785+56.64 Rt.	Commercial	1550 Industrial Road	1/1/2018	Industrial Road Real Est. LLC
TE2	162-04-606-004	"Le" 784+56.62 Rt. To "Le" 785+25.70 Rt.	Commercial	1550 Industrial Road	1/1/2018	Industrial Road Real Est. LLC
F3	162-04-606-005	"Le" 782+17.04 Rt. To "Le" 784+95.80 Rt.	Commercial	1550 Industrial Road	1/1/2018	Industrial Road Real Est. LLC
TE3	162-04-606-005	"Le" 782+32.84 Rt. To "Le" 784+67.76 Rt.	Commercial	1550 Industrial Road	1/1/2018	Industrial Road Real Est. LLC
F4	162-04-608-011	"Le" 782+88.75 Rt. To "Le" 783+02.26 Rt.	Commercial	236 W. Wyoming Ave.	1/1/2018	Ramon Steve Kaboli
F5	162-04-609-002	"Le" 780+21.99 Rt. To "Le" 783+03.82 Rt.	Commercial	1601 Industrial Road	1/1/2018	Bell Real Estate LLC
TE8	162-04-609-002	"Le" 780+28.88 Rt. To "Le" 782+98.70 Rt.	Commercial	1601 Industrial Road	1/1/2018	Bell Real Estate LLC
F6	162-04-609-003	"Le" 782+98.70 Rt. To "Le" 783+64.24 Rt.	Commercial	221 W. Wyoming Ave.	1/1/2018	Lexia Kathryn Allen and Tom Allen Trust
TE9	162-04-609-003	"Le" 782+87.61 Rt. To "Le" 783+70.07 Rt.	Commercial	221 W. Wyoming Ave.	1/1/2018	Lexia Kathryn Allen and Tom Allen Trust
F7	162-04-609-010	"Le" 778+96.13 Rt. To "Le" 780+28.88 Rt.	Commercial	1607 Industrial Road	1/1/2018	Wells Property Management LLC
TE10	162-04-609-010	"Le" 778+02.61 Rt. To "Le" 780+30.73 Rt.	Commercial	1607 Industrial Road	1/1/2018	Wells Property Management LLC
LVVWD EASEMENT	162-04-609-010	“Le” 778+91.07 Rt. to “Le” 778+97.19 Rt.	Commercial	1607 Industrial Road	1/1/2018	Wells Property Management LLC
F8	162-04-507-010	"Le" 790+05.61 Rt. To "Le" 791+88.25 Rt.	Commercial	155 W. Imperial Ave.	1/1/2018	Jesus G & Dora N Diaz
TE11	162-04-507-010	"Le" 790+55.93 Rt. To "Le" 791+94.44 Rt.	Commercial	155 W. Imperial Ave.	1/1/2018	Jesus G & Dora N Diaz

Attachment 21-2
CLV Acquisition Schedule

Revised 6/8/15

CLV PARCEL NO.	APN	NDOT Stationing	TYPE	PHYSICAL ADDRESSS	Delivery Date	Ownership
F9	162-04-606-001	"Le" 788+17.62 Rt. To "Le" 790+73.58 Rt.	Commercial	1400 Industrial Road	7/1/2017	Marjorie E. Gleed and Gleed Family LP
F10	162-04-606-002	"Le" 786+12.70 Rt. To "Le" 789+03.44 Rt.	Commercial	1414 Industrial Road	1/1/2018	Vazzana Family Trust Ann & Bruce Vazzana Trustees
F11	162-04-607-007	"Le" 787+61.06 Rt. To "Le" 789+08.32 Rt.	Commercial	320 W. Utah Ave.	1/1/2018	320 W. Utah Ave. LLC
TE14	162-04-607-007	"Le" 787+88.59 Rt. To "Le" 789+53.40 Rt.	Commercial	320 W. Utah Ave.	1/1/2018	320 W. Utah Ave. LLC
TE4	162-04-608-001	"Le" 786+25.29 Rt. To "Le" 787+11.53 Rt.	Commercial	331 W. Utah Ave.	1/1/2018	Robin & Michelle Mellor Family Trust Robin S.
TE5	162-04-608-005	"Le" 785+25.70 Rt. To "Le" 786+31.12 Rt.	Commercial	1515 Industrial Road	1/1/2018	Mark & Mirna Orchard
TE6	162-04-608-006	"Le" 784+64.46 Rt. To "Le" 785+31.53 Rt.	Commercial	1519 Industrial Road	1/1/2018	Ramon Steve Kaboli
TE7	162-04-609-001	"Le" 779+66.87 Rt. To "Le" 781+18.04 Rt.	Commercial	1603 Industrial Road	1/1/2018	Gaming Partners Intl USA, Inc.
TE12	162-04-607-002	"Le" 790+36.33 Rt. To "Le" 790+66.46 Rt.	Commercial	1405 Industrial Road	1/1/2018	Jesus Gerado & Dora Ninfa Diaz
TE13	162-04-607-004	"Le" 790+08.61 Rt. To "Le" 790+38.74 Rt.	Commercial	1407 Industrial Road	1/1/2018	Esther L Edwards Trust Esther L Edwards Trustee
TE15	162-04-607-019	"Le" 789+50.67 Rt. To "Le" 790+11.13 Rt.	Commercial	1411 Industrial Road	1/1/2018	Kenneth D. Black

ATTACHMENT 21-3
DEPARTMENT PROVIDED PROPERTIES – AGREEMENTS

[Information included on Proposer's Confidential SharePoint site to be inserted in execution version]

This page intentionally left blank.

Hansen Number 56966

SPECIAL PROVISIONS

MAY 2015

PROJECT NEON DESIGN BUILD

PREPARED BY:

CITY OF LAS VEGAS

TABLE OF CONTENTS

SECTION	TITLE
SECTION 506	STEEL STRUCTURES
SECTION 622	CONSTRUCTION SURVEYING BY THE CONTRACTOR
SECTION 623	TRAFFIC SIGNALS AND STREET LIGHTING
SECTION 628	TRAFFIC STRIPING, PAVEMENT MARKINGS, AND CURB MARKINGS
SECTION 630	SANITARY SEWERS
SECTION 699	SITE FURNISHINGS
SECTION 328000	IRRIGATION

SECTION 506

STEEL STRUCTURES

DESCRIPTION

506.01.01 GENERAL

ADD THE FOLLOWING TO THIS SUBSECTION:

This work shall include construction of metal handrails.

CONSTRUCTION

ADD THE FOLLOWING SUBSECTION:

506.02.02 STEEL SURFACE TREATMENT

All steel shall be:

Painted. The paint system shall be a 3-coat system suitable for the intended use as recommended by the paint manufacturer and approved by Engineer. Application shall be in accordance with the recommendations of the paint manufacturer. Applicator shall be certified by the paint manufacturer for the approved paint system. Color shall be as selected by Owner from manufacturer's standard colors similar to the colors identified for the Grand Central Industrial bridge over UPRR in the Project NEON DB1-4 Landscape & Aesthetic Requirements; provide 3 color samples for Owner's review. All painted surfaces shall be blast cleaned in accordance with Society for Protective Coatings Surface Preparation Specifications No. 7, latest edition, (SSPC-SP10) Near White Blast Cleaning. Painted bridges shall be configured such that all surfaces and connections are either fully sealed or allow access for adequate paint coverage. Sealing shall be accomplished by welding except that long continuous seams may be sealed with caulk prior to painting. All surfaces shall be painted, with the exception of expansion joint cover plates, teflon surfaces, bolted connections, and faying surfaces. Touch up paint shall be provided to paint outer surfaces of bolted splices and areas of damaged paint.

END OF SECTION 506

ADD THE FOLLOWING SECTION TO DIVISION II – CONSTRUCTION DETAILS

SECTION 622 – CONSTRUCTION SURVEYING BY THE CONTRACTOR

DESCRIPTION

622.01.01 GENERAL

A. The Contractor shall, under supervision of a Professional Land Surveyor, registered in the state of Nevada, furnish and set construction stakes establishing locations, lines, and slope stakes for roadway, storm drain, drainage structures, sewer, laterals, and for all other improvements for project necessary to ensure conformance of work to lines, elevations, locations, and grades as shown on the Plans and in these Special Provisions. Any horizontal or vertical discrepancies shall be reported to Engineer prior to commencement of construction. Any revisions or changes approved by Engineer that affect lines, grades, elevations or locations of any improvement shall be indicated on As-Built (Record) Drawings.

B. If necessary, the Contractor shall also perform and provide to the Engineer those items described in subsection 203.04.01 of the USS. Any revisions or changes approved by the Engineer that affect the lines, grades, elevations or locations of any improvement shall be indicated on the As-Built (Record) Drawings.

C. Contractor shall preserve property line and corner survey points. If their destruction is determined by Engineer to be unavoidable, and their replacement is not called for on the plans, Owner shall replace or pay for their replacement under this contract as determined by Engineer. Markers that are disturbed or destroyed by Contractor's operations without prior approval by the Engineer shall be replaced by Contractor at no additional cost to the Owner. Replacement shall be done only by a Nevada Professional Land Surveyor and in accordance with the USS. A monument tie sheet for replacement of permanent survey monuments shall be submitted to Engineer for approval.

D. When a permanent survey marker and/or monument is located within the construction area of any roadway, storm drain, drainage structures, sewer line or channel improvement, the Contractor shall adjust the cover or replace the monument as noted on the plans. The cost of replacement or adjustment of said monuments shall be included in the lump sum bid for Construction Survey. If monuments are to be installed as part of the work, they shall be placed in accordance with the USD numbers 239 through 243 and Section 621 of the USS.

E. The Contractor shall, under the supervision of a Professional Land Surveyor, prepare and provide GPS location and mapping of as-built conditions for all proposed sanitary sewer and storm drainage facilities as described on the Project Drawings and in this Section.

MATERIALS

622.02.01 BLANK

CONSTRUCTION

622.03.01 GENERAL

A. Prior to all work in this section, the Contractor shall carefully inspect all installed work and verify that all such work is complete to a point where this installation may properly commence.

B. The Contractor shall verify that all work can be installed in accordance with all pertinent codes and regulations, Contract Drawings and referenced standards.

C. The Contractor shall verify that there are no conflicts with existing utilities prior to the start of work.

D. In event of a discrepancy, the Contractor shall immediately notify the Engineer in writing.

E. Installation of work in areas of discrepancy shall not proceed until all such discrepancies have been fully resolved.

F. After stakes and marks have been set, it shall be the responsibility of the Contractor to protect the stakes and marks. Should any of the stakes or marks be destroyed or disturbed by the Contractor's operations or otherwise, the costs of replacing said stakes or marks shall be paid by the Contractor.

G. The Engineer, at his discretion, may periodically have survey work performed to verify conformance to the construction plans. Any nonconformity found to be the fault of the Contractor, or the Professional Land Surveyor, shall be corrected at no additional cost to the Owner.

H. Upon completion of the project and as a condition for final payment authorization, the Contractor shall furnish to the Engineer a Record of Survey/monument tie map and a certification attested to by the Professional Land Surveyor that the work performed for this contract has been constructed to the lines and grades as described in the As-built (Record) Drawings. When requested, the Contractor shall also provide the Engineer with copies of all field notes, computations, and other related work performed by the Professional Land Surveyor.

622.03.02 FINAL ACCURACY

A. Surface Drainage Structures (including all concrete or asphalt gutters and drains) shall be installed within 0.05 feet horizontally and 0.05 feet vertically from the location taken from the project plans, and shall not vary more than 10 percent of the gradient shown on the plans.

B. Monument Cases and Brass Caps shall be centered to within 0.01 feet horizontally of the position as called for on the plans, and the ties to that monument.

C. Sanitary and Storm Drainage Sewer Systems shall be installed within 0.05 feet horizontally and 0.05 feet vertically of the exact location taken from the project plans. In addition, the gradient of any 10-foot section of pipe shall not vary by more than 10 percent of the gradient shown the project plans

622.03.03 INSTALLED/EXPOSED UTILITY SURVEYING

A. After construction of the approved plans and before backfilling, survey shall be conducted indicating the size, horizontal and vertical location, and configuration of any utility constructed with this project or utility exposed during construction, and utility encasement if applicable. Utility final location information shall be described by coordinates which shall be based on the official horizontal and vertical control networks of the City of Las Vegas and be certified by a Nevada professional land surveyor to have positional certainties within +/- 0.3-ft.

B. Survey measurements for utilities constructed or exposed during the course of construction including but not limited to pipes, manholes, drop inlets, conduits, cables, encasements, boxes, vaults and appurtenances shall be located to the extent possible within the excavation area. Measurements shall be taken at a minimum of 100-ft intervals, at all exposed angle points, deflections of the utility exceeding +/- 0.5-ft, at all exposed points that enter/exit the excavation or the public right-of-way, and sufficient measurements to accurately define curving layout.

C. Potholes performed by the contractor prior to or during construction shall be surveyed indicating the size, location, burial depth, and configuration of the utility. Pothole location information shall be tied to the official horizontal and vertical control networks of the City of Las Vegas and be certified by a Nevada professional land surveyor.

D. Utility final location information shall be submitted on paper and in electronic form, on a form specified by the City Surveyor.

E. Interim survey progress reports shall be submitted to the Engineer certifying sufficient survey measurements have been performed prior to backfilling as required by this section on a weekly basis or as directed.

SECTION 623

TRAFFIC SIGNALS AND STREET LIGHTING

DESCRIPTION

623 G.01.01 GENERAL

ADD THE FOLLOWING PARAGRAPHS TO THIS SUBSECTION:

I. The Contractor shall provide all labor, materials, equipment, transportation and services required to install the street lighting, traffic control system, and related items on the plans and in the specifications resulting in complete and operational systems, to include fully functional opticom, video detection, pedestrian detection, and loop detection system complete with the manufacturer's latest versions of firmware.

J. All equipment shall function as designed. All lighting standards shall be fully operational within fifteen (15) days after installation. The luminaries shall be leveled before they are energized.

K. The Contractor shall maintain the new lighting system and traffic signal system from the date energized until the entire project has been accepted by the City of Las Vegas. The Contractor shall repair or replace any defective component of the systems within 24 hours after notice in writing by the Engineer if of a non-hazardous nature. If public safety is endangered, the Contractor shall take immediate steps to correct the problem after verbal notice by the Engineer.

L. The contractor shall have a lighting representative present at the time the City inspects the street lighting installations.

MATERIALS

623 G.02.04 CONDUCTORS AND CABLE

DELETE PARAGRAPH "A.4" AND REPLACE WITH THE FOLLOWING:

A. 4. Electrical cable for traffic signals shall be IMSA 20-1 approved signal cable of proper size for the required installation unless otherwise specified in the Contract Documents. All traffic signal cable shall be 25-conductor, No. 14 AWG solid copper wire traffic signal cable or as specified in the Contract Documents or directed by the Engineer.

CONSTRUCTION

623 G.03.01 MAINTENANCE OF EXISTING AND TEMPORARY ELECTRICAL SYSTEMS

ADD THE FOLLOWING TO PARAGRAPH "H" OF THIS SUBSECTION:

Prior to start of work, Contractor shall submit drawings stamped by a Nevada Professional Engineer showing support of facilities covered by Section 623 for approval by City Traffic Engineer

for all trenches that will expose greater than eight feet of conduit. The Contractor shall submit the support system to be used for all trenches exposing up to 8 feet of conduit for approval prior to trenching. Conduit support systems, at a minimum shall support all joints in the conduit, prevent the decoupling of joints, and prevent deflection greater than 6 inches.

Some signalized intersections may require temporary signalization in lieu of support.

ADD THE FOLLOWING PARAGRAPHS TO THIS SUBSECTION:

J. All equipment and materials shall be as manufactured or modified by the manufacturer and installed by the Contractor in the manner for which it was designed and intended. No equipment may be modified by the Contractor unless prior written permission is provided by the Engineer.

K. Existing service shall remain fully operational during construction. Outages required shall be scheduled with the Owner and timing devices reset after resumption of service. The Contractor shall field verify wiring connections and routing prior to disconnecting any conductors. The modification, extension or removal of the existing conductors and equipment shall be inspected by and accepted by the Engineer. Electrical work shall be in accordance with the requirements of the National Electrical Code.

L. The data indicated on the plans and in these specifications is as exact as could be secured, but its absolute accuracy is not guaranteed. Exact locations, distances, levels, and other conditions will be governed by unforeseen obstacles in the field.

M. The Contractor shall use the plans and these specifications for guidance, and secure the Engineer's approval for all changes of location or scope of work. The Engineer should be consulted regarding the exact locations of pullboxes, poles and cabinets for the traffic signal system.

N. Once the Contractor commences work on the Project, the Contractor shall provide all maintenance for existing traffic signal facilities that are to be modified or replaced, except that the City will pay for power. The Contractor shall provide the above maintenance until the City gives written notice that the City accepts signals back for maintenance at the end of the Project. The above maintenance does not include any prior damage such as burned out signal displays, non-operative detection, or other malfunctioning equipment. The Contractor shall provide written documentation of all non-functioning and malfunctioning traffic signal equipment before commencing work on the project. This malfunctioning equipment shall be inspected by both the Contractor and the Engineer, or Engineer's Designee, prior to the commencement of work. In the event that the Engineer does not receive written notice and the Contractor begins work on the project, this will suffice as evidence that all equipment is functional and operational. If any traffic signal equipment fails or malfunctions during the course of the Project, the Contractor shall repair or replace traffic signal facilities as necessary to provide a fully functioning system before final acceptance for maintenance by the City. For traffic signals, repair work by qualified electricians shall commence within one hour of notification via the Contractor's 24-hour emergency response phone number, at which time the Contractor will have two hours to correct the noted violation. The City will program for the Traffic Signal Controller and the Malfunction Management Unit (MMU).

1. If the repair is not completed within the two-hour time limit, the **Contractor will be assessed $200.00 per hour until the repair is complete.**
2. This condition may cause the Project to "Stop Work"; this will not be grounds for a time extension of the contract.

623 G.03.05 EXCAVATION AND BACKFILLING

ADD THE FOLLOWING PARAGRAPHS TO THIS SUBSECTION:

M. All trenching and backfill shall comply with applicable portions of the USS, USD and plans. All trenching shall be deep enough to insure a minimum of twenty four inches (24") of cover over the conduit measured from the top of conduit to finish grade, *with the exception* of interconnect conduit which shall have a minimum of thirty inches (30") of cover over the conduit. The backfill in street areas shall be Type II gravel compacted to 95% relative density or controlled low strength material (CLSM) Fill. No trench shall be left open after established working hours without approval of the Engineer.

N. Conduit locations on the plans are for reference only. Actual locations are to be determined by the Contractor as to the most economical location --either behind the curb or in front of the lip of the gutter--but in either case, the conduit must remain parallel to the back of curb or the edge of pavement between the lighting standards, and the location shall be approved by the Engineer. "As Built" marked prints showing installed locations shall be given to the Engineer by the Contractor.

O. All conduit that is terminated, stubbed and capped for future use shall be marked by a "+" a minimum of 3 inches high and directly above the conduit, cut into the face of the curb, wall, concrete paving, etc.

623 G.03.07 FOUNDATIONS

ADD THE FOLLOWING PARAGRAPHS TO THIS SUBSECTION:

B. 3. Crash caps above foundations shall be sloped away from poles. All traffic signal poles shall be plumb AFTER the signal heads are in place. Any leveling shall be made before the grout cap is poured over the foundations.

C. 6. Foundations shall be excavated without disturbing surrounding material. All loose material shall be removed before concrete is placed into the opening. Foundations shall not be over-excavated.

623 G.03.08 WIRING AND CONDUIT

ADD THE FOLLOWING PARAGRAPHS TO "E" OF THIS SUBSECTION:

1. Chair lugs shall be used for termination of solid conductors.

2. Solid conductors shall not be terminated with crimp-on connections.

ADD THE FOLLOWING PARAGRAPH TO THIS SUBSECTION:

V. When new conduit is to be joined to existing conduit, the Contractor shall verify the integrity of the existing conduit and make necessary repairs. The Engineer shall approve any additional repair work prior to commencing.

623 G.03.09 ELECTRICAL SERVICE

ADD THE FOLLOWING PARAGRAPHS TO "A" OF THIS SUBSECTION:

Each service provided by the Contractor shall have a 200 amp rating for traffic signal system, streetlight circuits, or combined services.

Services shall be 200 amp pad mount (unless otherwise noted in the plans) and shall be equipped with one 60 amp single pole breaker for the signal and one 40 amp single pole breaker for the intersection streetlights. In addition, other breakers as may be shown in the service panel schedule in the plans will be required.

The Contractor shall obtain all addresses for new services from the City of Las Vegas, Department of Planning and Development, 333 Rancho Drive, (702) 229-5408.

ADD THE FOLLOWING PARAGRAPH TO "B" OF THIS SUBSECTION:

It shall be the Contractor's responsibility to coordinate all work associated with service point connections required by this contract with Nevada Energy.

623 G.03.10 PULL BOXES

ADD THE FOLLOWING PARAGRAPH TO THIS SUBSECTION:

E. The interior of pull boxes shall be void of any other materials except conduit risers and necessary wiring. All excess materials shall be removed to promote drainage.

ADD THE FOLLOWING SUBSECTION:

623 G.03.13 SALVAGING ELECTRICAL EQUIPMENT

A. Where shown on the plans or ordered by the Engineer, existing electrical equipment to be removed, including controller units, cabinets, signal heads, luminaires, standards, mast arms, ballasts, transformers, service equipment, pull boxes, and detector contact units shall be salvaged for reuse by the maintaining agency.

B. Care shall be exercised in removing and salvaging electrical equipment so that it will remain in its original form and existing condition whenever possible. Attention is directed to the provisions in subsection 107.11, "Responsibility for Damage Claims", and 107.12 "Protection and Restoration of Property and Landscape". The Contractor will be required to replace, at his expense, any of the above-mentioned electrical equipment, which, as determined by the Engineer, has been damaged or destroyed by reason of his operations.

C. Unless otherwise specified, underground conduit, conductors, foundations, and detector frames not reused shall become the property of the Contractor and shall be removed from the City right-of-way, except if not interfering with other construction, said materials, except foundations, may, with the written approval of the Engineer, be abandoned in place. Certain other materials, where shown on the plans, shall also become the property of the Contractor.

D. Unless otherwise specified, foundations to be abandoned shall have the top 18" below the crash cap removed and the resulting excavation backfilled. Attention is directed to the provisions in subsection 623 G.03.05, "Excavating and Backfilling", regarding foundations to be abandoned.

E. Holes formed by removing pull boxes and foundations shall be filled with material equivalent to the surrounding material.

F. All street lighting and traffic signal equipment removed and / or designated to be salvaged shall be delivered by the Contractor to the appropriate CLV Service Yard with a means to unload. A 48-hour notice of delivery is required. Call 229-6331 to set up delivery time. Repair of any damage to equipment during this process will be the contractor's responsibility, at no additional cost to the City.

ADD THE FOLLOWING SUBSECTION:

623 G.03.14 REINSTALLING SALVAGED ELECTRICAL EQUIPMENT

A. When salvaged electrical equipment is to be reinstalled, the Contractor shall furnish and install all necessary materials and equipment, including signal mounting brackets, anchor bolts, nuts, washers, and concrete as required to complete the new installation.

B. All traffic signal, flashing beacon, and lighting fixtures to be reinstalled shall be cleaned and relamped.

C. Existing materials required to be relocated and found to be unsatisfactory by the Engineer shall be replaced by new material and the cost therefore will be paid for as extra work as provided in subsection 104.03, "Extra Work".

ADD THE FOLLOWING SUBSECTION:

623 G.03.15 STOCKPILING SALVAGED ELECTRICAL EQUIPMENT

A. Existing equipment removed and not reused shall be salvaged, dismantled and returned to the maintaining agency during normal working hours. Call the maintaining agency to arrange for a time and location to stockpile the salvaged electrical equipment. An inventory of salvaged material shall accompany each delivery.

TRAFFIC SECTION

623 T.02.01 TRAFFIC SIGNAL CONTROLLER CABINETS

DELETE PARAGRAPH "D" OF THIS SUBSECTION AND REPLACE WITH THE FOLLOWING:

D. Unless otherwise specified, all cabinets shall be painted with two coats of white enamel both inside and out. Unpainted, Polished aluminum cabinets are not acceptable.

ADD THE FOLLOWING TO PARAGRAPH "E" OF THIS SUBSECTION:

The lifting tabs shall be bolted in place.

DELETE PARAGRAPH "F.3" AND REPLACE WITH THE FOLLOWING:

There shall be 3 aluminum shelves provided with all cabinets.

DELETE PARAGRAPH "J" AND REPLACE WITH THE FOLLOWING:

Cabinets shall have 2 light fixtures with lamps mounted in the cabinet interior.

DELETE PARAGRAPH "J.1" AND REPLACE WITH THE FOLLOWING:

One fluorescent or LED equivalent light shall be mounted over the door, at a location least likely to be damaged, and shall be a minimum of 20 inches in length.

DELETE PARAGRAPH "J.2" AND REPLACE WITH THE FOLLOWING:

The second light fixture shall be a 15 watt fluorescent or LED equivalent fixture and shall be attached to the bottom of the lowest shelf above the back-panel and field terminals.

ADD THE FOLLOWING PARAGRAPH TO "L.3" OF THIS SUBSECTION:

The AutoCAD format used shall be compatible with the current version of AutoCAD used by the city.

DELETE PARAGRAPH "L.5.i " AND REPLACE WITH THE FOLLOWING:

Two dual-circuit, solid state, NEMA flashers having a flash rate of 50 to 60 flashes per minute (see NEMA TS-1, Section 8, "Solid State Flashers") shall be installed.

DELETE PARAGRAPH "L.5.i.1" AND REPLACE WITH THE FOLLOWING:

The red position of the load switch bays shall be operated from the flasher contacts as follows:

Flasher 1, contact A - phases 1, 5, and OLA

Flasher 1, contact B - phases 2, 6, and OLC

Flasher 2, contact A – phases 3, 7 and OLB

Flasher 2, contact B – phases 4, 8 and OLD

DELETE PARAGRAPHS "L.5.j.3" AND REPLACE WITH THE FOLLOWING:

Two single, fourplex, U-ground type of convenience outlets shall be furnished for video equipment and other electronic test equipment.

DELETE PARAGRAPHS "L.5.j.3.b" AND REPLACE WITH THE FOLLOWING:

The outlets will be located no more than 12 inches from the roof of the cabinet, one on each side panel of the cabinet interior.

DELETE PARAGRAPH "L.5.j.4" AND SUBPARAGRAPHS.

DELETE PARAGRAPH "L.5.k.3.c".

DELETE PARAGRAPH "L.5.l.2.d".

DELETE PARAGRAPH "L.5.l.4.a".

DELETE PARAGRAPH "L.5.l.6.d.3" AND REPLACE WITH THE FOLLOWING:

The toggle switches shall place a call into the controller for the associated pedestrian or vehicular phase when placed in the down (Test) position. This position shall be a momentary position.

ADD THE FOLLOWING PARAGRAPHS TO "L.5.l.6" OF THIS SUBSECTION:

8) An EXTERNAL MINIMUM RECALL (identified EMR) switch shall be provided on the interior of the cabinet door for troubleshooting purposes. It will be a single pole-single throw switch and will apply logic ground to the EMR input to the controller. An LED circuit will also be wired to indicate the switch is activated.

DELETE PARAGRAPHS "L.5.m" AND REPLACE WITH THE FOLLOWING:

All cabinets shall be equipped with power input filters as manufactured by **Innovative Technologies, Inc** model number **HS-P-SP-120-60-RJ** or approved equal, and for telecommunications line protection shall be Model MDF 6 95V or MF 25 95V.

ADD THE FOLLOWING PARAGRAPHS TO "L.5." OF THIS SUBSECTION:

n. Solid state load contactor switch.
o. All cabinets shall be equipped with a fourplex auxiliary power outlet and a duplex GFCI power outlet.

ADD THE FOLLOWING PARAGRAPHS TO THIS SUBSECTION:

M. All field cables and interconnect cable entering the traffic controller cabinet shall be permanently labeled in the cabinet with their location and destination point in the intersection (i.e. "NW Corner – XX-A Pole"). Interconnect cables shall be labeled with their direction of

travel (i.e. “Interconnect – From South” or “Interconnect – To North”). Wherever possible, the phase shall be noted on the label (i.e. “NE Corner – XX-A Pole – phase 8”).

The wires shall be identified using 1-inch wide UV resistant marking tape and the tape manufacturers recommended permanent black ink marker. Once marked, a suitable diameter piece of clear heat shrink tubing shall be installed and shrunk to protect the marking tape. The tubing shall extend 1-inch past the extent of the label in each direction along the wire to prevent moisture and dirt penetration.

623 T.02.02 TRAFFIC SIGNAL CONTROLLER CABINET EQUIPMENT

ADD THE FOLLOWING PARAGRAPH TO “C” OF THIS SUBSECTION:

4. When Audible Tactile Pedestrian Push Buttons (PPB) are specified, an Audible Tactile interface panel shall be provided and mounted on the middle left side wall above the loop detector terminal panel. Central Control Unit (CCU) and failsafe cables shall be provided, neatly installed and terminated per manufacturer instructions. A CCU shall be provided for all cabinets configured for Audible Tactile PPBs.

DELETE PARAGRAPH “E” AND SUBPARAGRAPHS AND REPLACE WITH THE FOLLOWING:

E. Loop Detection:

1. When specified, the cabinet shall be wired with a one (1) 12 slot rack-mounted loop detection unit. There shall be enough capacity for 12-two (2) channel amplifiers (Total of 24 vehicle detector channels). The rack will be wired with the breakdown as follows:

    a. There shall be two (2) channels in the detector rack assembly for each of the phases 1, 3, 5, and 7, wired for left turn operation. These will be wired as presence loops, with each conductor independently terminated onto an individual terminal elsewhere within the cabinet, which can readily be moved. The “Relay Common” must terminate, and then it must be wired to logic ground.

    b. There shall be three (3) channels in the detector rack assembly for each of the phases 2, 4, 6, and 8 wired for thru-traffic operation. These will be wired as presence loops, with each conductor independently terminated onto an individual terminal elsewhere within the cabinet, which can readily be moved. The “Relay Common” must terminate, and then it must be wired to logic ground.

    c. There shall be one (1), channel in the detector rack assembly for each of the phases 2, 4, 6, and 8 wired for thru-traffic “call loop” operation. These will be wired not to output a call during the detected phase green service, with each conductor independently terminated onto an individual terminal. The “Relay Common” must terminate independently, then it must then be wired to the red and yellow output from the controller (this must be diode isolated). Any other

method of “call loop operation” must be approved by Traffic Engineering & Field Operations before acceptance.

d. All detector rack slots must be clearly marked as to the appropriate phase to which it belongs.

e. The panel to be used for field input wiring (loop lead-ins) shall be installed on the lower left sidewall.

2. When specified, the cabinet shall be wired with a two (2) 12 slot rack-mounted loop detection units. There shall be enough capacity for 24-two (2) channel amplifiers (Total of 48 vehicle detector channels). One rack will be wired as specified in Paragraph E.1.a., b., and c, above. The second rack will be wired with the breakdown as follows:

   a. There shall be two (2) channels in the detector rack assembly for each of the phases 1, 3, 5, and 7, wired for left turn operation. These will be wired as presence loops, with each conductor independently terminated onto an individual terminal elsewhere within the cabinet, which can readily be moved. The “Relay Common” must terminate, and then it must be wired to logic ground.

   b. There shall be four (4) channels in the detector rack assembly for each of the phases 2, 4, 6, and 8 wired for thru-traffic operation. These will be wired as presence loops, with each conductor independently terminated onto an individual terminal elsewhere within the cabinet, which can readily be moved. The “Relay Common” must terminate, and then it must be wired to logic ground.

   c. All detector rack slots must be clearly marked as to the appropriate phase to which it belongs.

   d. The panel to be used for field input wiring (loop lead-ins) shall be installed on the lower left sidewall.

3. All cabinets shall be provided with a complete set of two (2) channel rack mount detectors and appropriate number of power supply(s) to fully populate the rack detector assemblies. Two channel rack detector amplifiers shall be Eberle Design Inc., Model 622T (or equivalent) with vehicle extend and delay capability. Detector rack power supply shall be Eberle Design Inc., Model PS 175 (or equivalent).

DELETE PARAGRAPH TO “F.1” AND REPLACE WITH THE FOLLOWING:

All cabinets shall be equipped with encoded Global Traffic Technologies (GTT) Opticom compatible Emergency Preemption.

DELETE PARAGRAPH TO “F.3” AND REPLACE WITH THE FOLLOWING:

Provide one 4 channel rack mounted phase selector card and model 760 rack.

DELETE PARAGRAPH "F.4" AND SUBPARAGRAPHS AND REPLACE WITH THE FOLLOWING:

Cabinets shall be wired with an opticom green-sense harness terminated on the field terminals.

DELETE PARAGRAPH "F.5" AND SUBPARAGRAPHS AND REPLACE WITH THE FOLLOWING:

5. The wiring from the phase selector to the back panel shall be as follows:

   Channel A to Controller Plug A, Pin q.

   Channel B to Controller Plug A, Pin y.

   Channel C to Controller Plug B, Pin W.

   Channel D to Controller Plug B, Pin X.

DELETE PARAGRAPH "G" AND SUBPARAGRAPHS AND REPLACE WITH THE FOLLOWING:

G. Supplemental D Plug Interface Panel:

1. The cabinet shall be equipped with a D panel complete with wiring harnesses to connect the D panel to the D plug on the controller. The cabinet shall be wired to route each of the 48 detector inputs separately into the controller.

The D Panel shall have an integral plug and shall be supplied with two 6 foot connector cables that that can connect the D-panel to the D-plug in either a Naztec 980 ATC or Siemens M53 controller.

The integral plug on the D panel shall be a 57 pin female Amphenol flange mount P/N 206438-1 or approved equal. The connector cables shall each have a 57 pin male Amphenol P/N 206437-1 plug on one end to connect to the interface panel.

The opposite end of one cable will have a 37 pin male D-sub plug to connect to an M53 controller, and the opposite end of the second cable will have a 57 pin male Amphenol P/N 206437-1 plug to connect to an ATC controller (see diagram below).

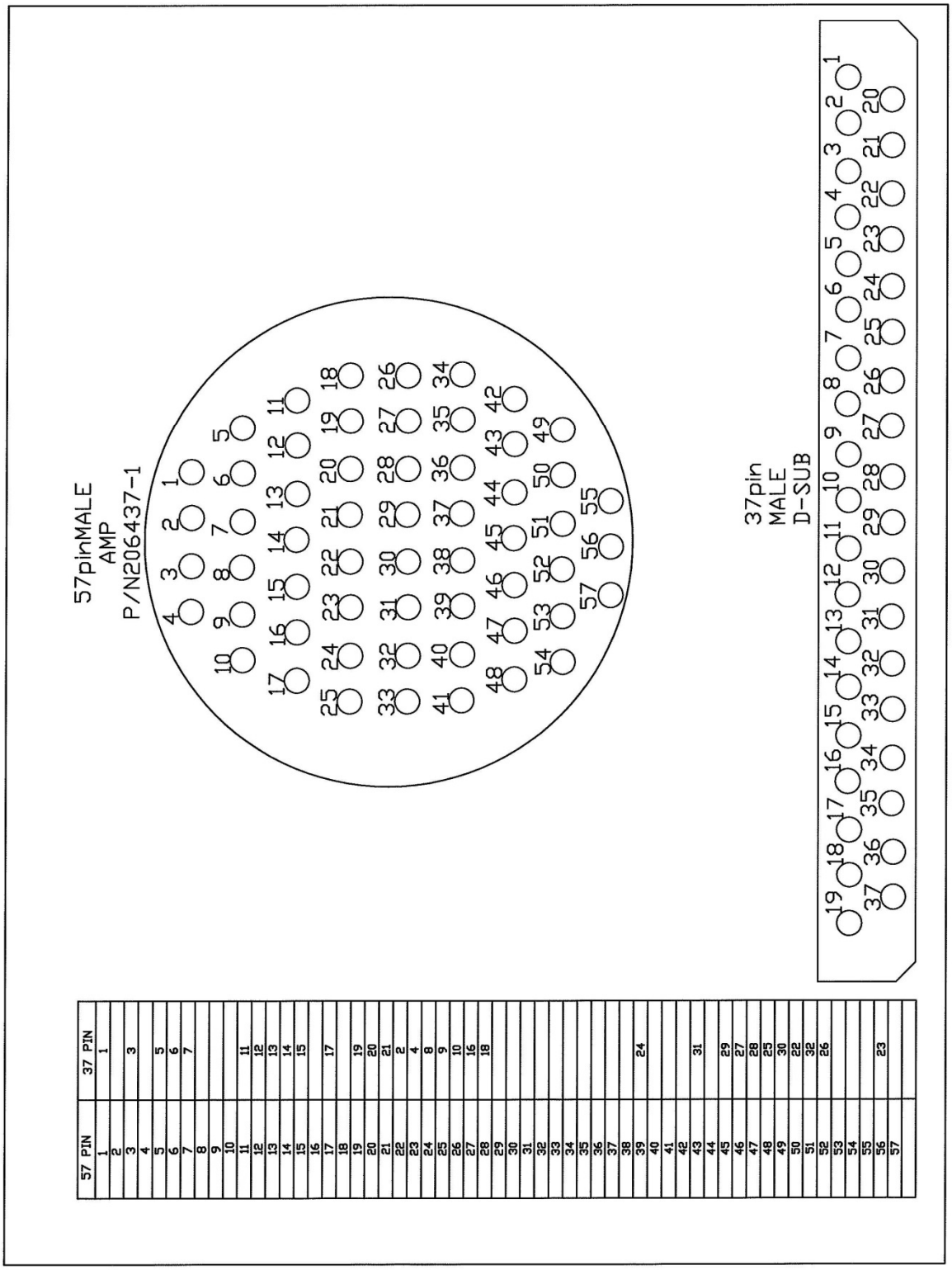

57 PIN	37 PIN
1	1
2	
3	3
4	
5	5
6	6
7	7
8	
9	
10	
11	11
12	12
13	13
14	14
15	15
16	
17	17
18	
19	19
20	20
21	21
22	2
23	4
24	8
25	9
26	10
27	16
28	18
29	
30	
31	
32	
33	
34	
35	
36	
37	
38	
39	24
40	
41	
42	
43	31
44	
45	29
46	27
47	28
48	25
49	30
50	22
51	32
52	26
53	
54	
55	
56	23
57	

DELETE PARAGRAPH "H.1" AND REPLACE WITH THE FOLLOWING:

Unless otherwise specified in the Contract Documents, all traffic control cabinets shall be supplied with a Malfunction Management Unit (MMU) with 16 channels.

DELETE PARAGRAPH "H.2" IN ITS ENTIRETY

DELETE PARAGRAPH "H.3" AND REPLACE WITH THE FOLLOWING:

Each MMU shall be furnished with the program card fully programmed for standard NEMA 8-phase operation.

DELETE PARAGRAPH "H.4" AND REPLACE WITH THE FOLLOWING:

Harnesses shall be wired in accordance with the diagram shown below.

CONFLICT MONITOR PANEL

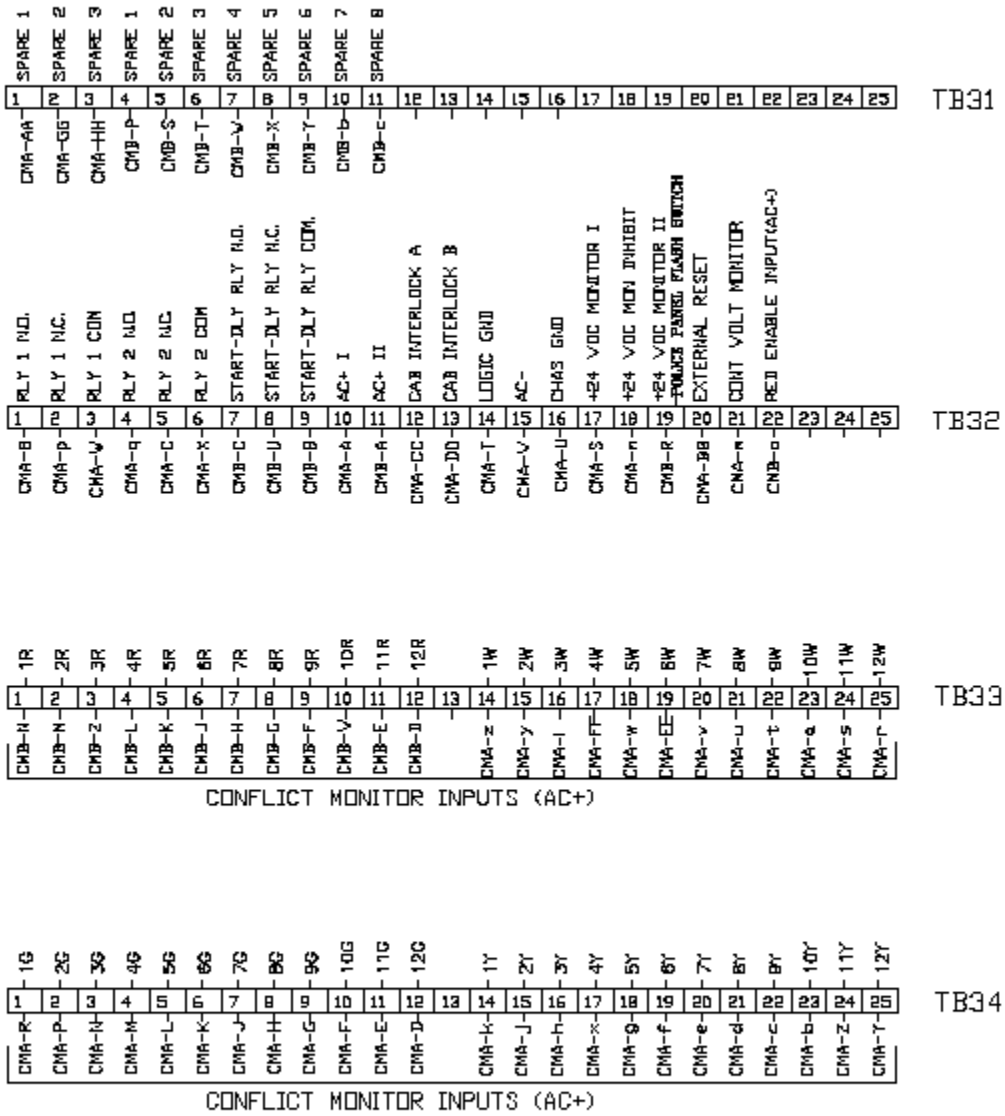

DELETE PARAGRAPH "H.5" IN ITS ENTIRETY

DELETE PARAGRAPH "H.6" IN ITS ENTIRETY AND REPLACE WITH THE FOLLOWING:

The wiring harness for the MMU shall have independent termination points.

DELETE PARAGRAPH "H.9" AND REPLACE WITH THE FOLLOWING:

Unused wires shall be terminated on a separate back panel terminal that is easily accessible from the front of the cabinet without removing other panels.

DELETE PARAGRAPH "I" AND SUBPARAGRAPHS AND REPLACE WITH THE FOLLOWING:

I. All conflict monitors shall be NEMA standard, meeting all requirements of Section 6 of the latest edition of NEMA TS 2 and shall meet the following requirements:

2. Malfunction Management Units shall have 16 channels.

3. Malfunction Management Units shall be capable of monitoring "Flashing Yellow Arrow" operations.

4. Malfunction Management Units shall be model MMU-1600GE as manufactured by Reno A&E, or model MMU2-16LEip as manufactured by Eberle Design, Inc., or approved equal.

5. Malfunction Management Units shall be wired per the "Interlock Diagram" shown below with the appropriate relays.

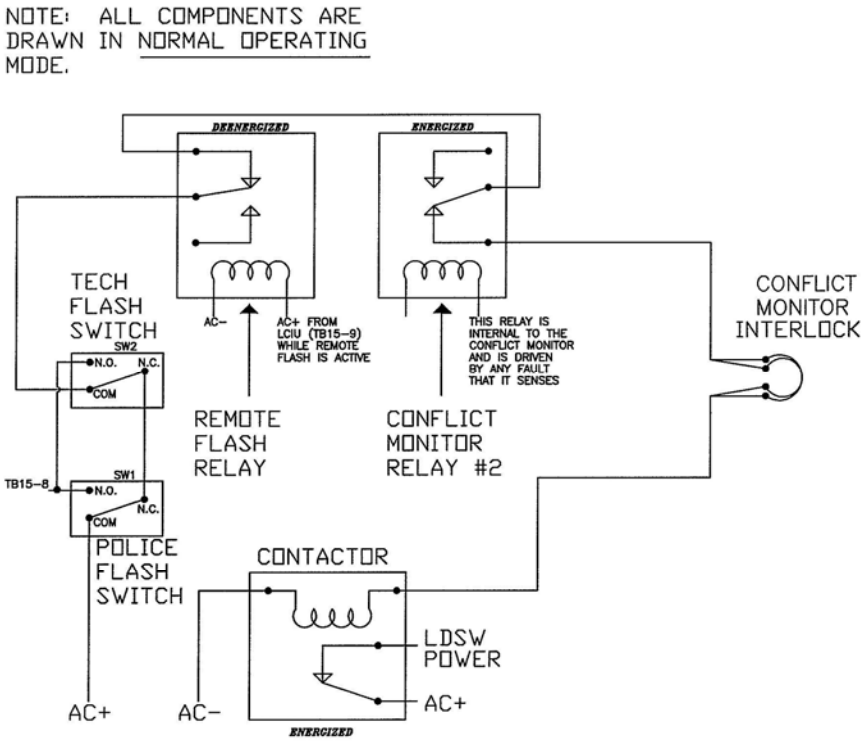

INTERLOCK DIAGRAM

623 T.02.03 TRAFFIC SIGNAL CONTROLLERS

DELETE "B.3" OF THIS SUBSECTION IN ITS ENTIRTY.

DELETE "B.6.d" OF THIS SUBSECTION AND REPLACE WITH THE FOLLOWING:

The contractor shall be responsible for configuring all electronic equipment to provide a fully functioning system which includes opticom, video and/or loop detection as applicable and pedestrian pushbutton configuration. The video detection equipment manufacturer shall provide a technical representative at the intersection during the turn-on and testing period if necessary. The contractor shall also furnish and install all Ethernet cables necessary to connect all IP capable electronic equipment to the IP switch in the cabinet.

DELETE "C" AND "D" OF THIS SUBSECTION AND REPLACE WITH THE FOLLOWING:

C. Traffic signal controllers shall be one of the following:

1. **NAZTEC 980 ATC TS2 Type 2 NTCIP Compliant Signal Controller**.

2. **Eagle M53 controller**.

D. The Contractor shall supply the controller to the City of Las Vegas Traffic Signal Repair Shop, fourteen days prior to signal turn-on, for testing. The Contractor shall deliver the

controller to 2824 E. Charleston Boulevard. Contractor shall notify the Traffic Signal Repair Shop (229-6075) seven days prior to installation.

623 T.02.04 MAGNETIC INDUCTION LOOP DETECTORS

ADD THE FOLLOWING TO "A.1":

The term "loop leads" and "home runs" refers to two (2) conductors from the loop detector in the roadway to pull box. The term "loop lead in" refers to the conductors from the conductors from the pull box to the traffic signal controller cabinet.

DELETE "A.4" AND "A.5" OF THIS SUBSECTION AND REPLACE WITH THE FOLLOWING:

A. 4. Loop leads shall be properly marked in the pull box and the cabinet as to the location and which vehicular phase of the traffic signal is associated with that loop as well as a lettered designation corresponding to the designation shown on the contract drawings. For example, a loop lead for the eastbound thru movement might be labeled as either 4B, 4C, 4D, or 4E.

A. 5. A minimum of 5 feet of loop wire and 5 feet of loop lead-in shall be provided and stored in the pull box for slack.

DELETE "A.7" OF THIS SUBSECTION IN ITS ENTIRETY.

ADD THE FOLLOWING PARAGRAPH TO "B.7." OF THIS SUBSECTION:

B. 7. Preformed loops shall by one of the following manufacturers:

a. Reno A & E,

b. Never-Fail Loop Systems, or

c. Approved equal.

ADD THE FOLLOWING PARAGRAPH TO "B" OF THIS SUBSECTION:

8. *(This installation should be used when pavement is to be milled/overlay or as an alternative installation method for full-depth pavement replacement)*

[When constructing new asphalt concrete pavement] [For milling and overlay pavement operations], preformed loops shall be installed prior to the final lift of pavement in saw cut loop slots made in the dense grade pavement (i.e. prior to the final lift of dense grade asphalt concrete, open grade, or U.T.A.C.S. pavement). There shall be a minimum cover of two inches measured from the bottom of the final finish grade pavement surface to the top of the preformed loop.

When installing loops in existing asphalt concrete or portland cement concrete pavements not being milled or replaced, saw cut slots in the pavement shall be a

minimum of three inches in depth and there shall be a minimum cover of two inches measured from the finish grade pavement surface to the top of the preformed loop.

When constructing new portland cement concrete pavement, preformed loops shall be installed prior to placement of the pavement at the interface between the concrete pavement and base course material.

Sawed slots shall be spaced a minimum of six inches (150 millimeters) apart and shall be blown clean of all loose material and dried prior to the installation of the preformed loop. The preformed loop shall be carefully placed into the saw slot using special tools to avoid inflicting damage to the preformed loop assembly. When more than one loop terminates in a pull box, each loop shall have a separate sawed slot for its leads and leads shall be properly marked as specified below. Loop slots shall be sealed prior to paving. Polymeric sand may be used in lieu of sealant with the approval of the Engineer. The saw cuts shall be blown clean after wire installation and before placement of sealant. The loop lead-in cable shall be as specified below. Each loop system (i.e. advanced detection, left turn movements, thru movements, and right turn movements) shall have at least one separate lead-in to the controller cabinet.

Loop leads shall be properly marked in the pull box and the cabinet as to the location and which vehicular phase of the traffic signal is associated with that loop as well as a lettered designation corresponding to the designation shown on the contract drawings. For example, a loop lead for the eastbound thru movement might be labeled as 4B, 4C, 4D, or 4E. A minimum of five (5) feet of loop wire and five (5) feet of loop lead-in shall be provided and stored in the pull box for slack. All loop wire home run to pull box shall clearly identify the direction of the cables windings for ease of installation.

Loop wire installation shall be tested using a megohmeter both prior to the placement of loop wire sealant, as well as after installation, in the presence of a City representative. Insulation resistance readings shall not be less than 100 megohms at 1000 volts.

DELETE "C" OF THIS SUBSECTION AND REPLACE WITH THE FOLLOWING:

C. Cable-in-Duct System.

1. The loop system shall be wired with a cable-in-duct assembly, defined as No. 12 AWG minimum, meeting IMSA Specification No. 51-5 as indicated in the Standard Drawings, directly installed in sawcut slots.

2. When constructing new asphalt concrete pavement, loop wires shall be installed prior to the final lift of pavement in saw cut loop slots made in the dense grade pavement (i.e. prior to the final lift of A.C.). There shall be a minimum cover of two inches measured from the bottom of the final asphalt concrete surface to the top of the loop.

3. When installing loops in existing asphalt concrete or Portland Cement concrete pavements not being milled or replaced, or in new Portland Cement concrete pavement, saw cut slots in the pavement shall be a minimum of three inches in depth and there shall be a minimum cover of two inches measured from the finish grade pavement surface to the top of the loop.

4. The loop or loops shall be installed in the saw cut slots in the pavement and shall be oriented and color-coded or taped in accordance with the Standard Drawings and plans. Sawed slots shall be blown clean of all loose material and dried. Loop wire shall be carefully placed into slot, avoiding damage to the wire insulation. When more than one loop terminates in a pull box, a maximum of two loop home runs shall be installed per single slot and leads shall be properly marked as specified below. Loop home runs assigned to different signal phases shall not share the same slot with loop home runs for another phase.

5. Sawed slots shall be spaced a minimum of six (6) inches (150 millimeters) apart.

6. Loops slots shall be sealed with detector sealant flush with pavement surface.

7. Each loop system shall have a separate lead-in to the controller cabinet.

8. All loops shall be megohmeter tested.

ADD THE FOLLOWING PARAGRAPHS TO "F" OF THIS SUBSECTION:

Multiple Conductor Loop Lead-In Cable for connection of Multiple Loop Systems:

When multiple conductor loop lead-in cable is specified on the contract drawings, use cable that conforms to the following specifications to connect multiple loop systems to the terminal blocks in the controller cabinet:

1) NEC / (UL) Specification TC or CM, certified for use in underground conduit or as an aerial cable supported by a messenger
2) 18 AWG stranded tinned copper conductors, polypropylene or polyethylene insulation. Six twisted pairs with insulation colors that match table below
3) Each twisted pair individually shielded with an aluminum foil shield that provides 100% coverage and a 20 AWG tinned copper drain wire
4) Outer jacket of polyvinyl chloride (PVC) or polyethylene (PE), cable rated for 300 volts minimum

6-Pair Loop Lead-in Cable Assignments

Pair Number	Color	Phase Letter Designation
1	Black & Red	A
2	Black & White	B
3	Black & Green	C
4	Black & Blue	D

5	Black & Yellow	E
6	Black & Brown	F

REPLACE EACH OF THE FOLLOWING SENTENCES OF "H" OF THIS SUBSECTION WITH THE FOLLOWING:

For Downtown pole mount cabinets, use two shelf mount detector amplifiers with 4 channels per loop detector amplifier.

2. All detectors shall be of the rack mounted type.
9. There shall be 2 channels per each loop detector.

ADD THE FOLLOWING PARAGRAPH TO "H" OF THIS SUBSECTION:

20. Turning off a loop amplifier shall not place a call.

623 T.02.05 EMERGENCY VEHICLE PRIORITY CONTROL SYSTEM (INTERNAL PREEMPTION)

ADD THE FOLLOWING PARAGRAPH TO THIS SUBSECTION:

Optical Preemption units shall be Global Traffic Technologies (GTT) (encoding capable), using a Model 764 phase selector installed in a Model 760 card rack with a Model 768 Auxiliary Interface Panel mounted in the cabinet and fully wired for green sense capabilities. Optical sensors shall be Model 721 and will be interfaced to the traffic signal controller cabinet using an M-138 cable. **No other optical preemption units will be accepted**. This is necessary to facilitate area-wide vehicle encoding.

623 T.02.06 TRAFFIC SIGNAL VIDEO IMAGE DETECTION SYSTEMS

ADD THE FOLLOWING TO THIS SUBSECTION:

A. All cabinets shall be wired for a Video Detection System with appropriate cameras (minimum one per vehicular direction) and cables mounted according to the manufactures specifications for each direction of vehicular travel. The following requirements must be met by the supplier of the equipment:
   1. **All vehicle detection will be by video image detection using either Iteris Edge 2 with Edgeconnect Pac (IP addressable), or Peek Videotrak IQ (with Ethernet port) video detection systems, or TRAFICON VIP 3D.2 with VIEWCOM E MAX+ (IP ADDRESSABLE) in a TRAFFICON detector rack**. The Video Detection System shall be an above ground vehicle detection system that utilizes machine vision when interfaced with standard color CCD cameras to provide complete intersection and roadway detection

   2. A single NEMA certified chassis shall be supplied for each Video Image Detection System, which will allow expandability to provide for a minimum of six camera inputs for vehicle detection. All interface equipment including interface panels, connectors, and cabling shall be provided and wired in the controller cabinet to accommodate a minimum of six camera operation, or as shown on the Contract Drawings.

3. Each Video Detection System will include a minimum of 4 standard color cameras, or as shown on the Contract Drawings. All cameras shall be equipped with adjustable lenses, allowing the user to modify the apparent size of the lens angle. These are also referred to as “zoom lenses”. Each direction/camera shall have a minimum of 24 user programmable detection zones (not lines or “probes”), and include heater, sunshield and mounting brackets. Each camera will have power and video directly from the cabinet. Coaxial cable will be type 8281 (solid center conductor). Camera connections that use a prefabricated cable integrating power and coaxial cable into a single weatherproof connector are acceptable. An in-line filter (CX06-BNCY or equivalent) will be provided for each camera coaxial cable input. The in-line filters will be mounted on a panel (panel to be attached to the inner side wall of the cabinet). “BNC” connectors are the only acceptable termination of coaxial cables. Cameras shall be mounted per the manufacturer’s recommendations and per the CLV Traffic Engineer approval. Cameras shall be mounted using a 72” extension bracket on signal mast arms. Cameras should be centered over the lane line between the left turn lane and the through lane for the approach being detected. The contractor should contact the city Traffic Signal Supervisor prior to mounting cameras for approval of the mounting locations.

4. All delay and extension functions for an approach must be performed within the video unit.

5. The units must be capable of simultaneously detecting all vehicles 300 feet from the stop bars on every approach.

6. The Video Image Detection System shall have an internet protocol (IP) port for remote access capability to transmit video and detector information to a computer. The Video Image Detection System shall have the capability to remotely reconfigure detection zones and transmit video via phone line, twisted pair, coaxial cable and fiber optic interconnect.

7. The Contractor shall provide a fully functioning and programmed system complete with latest version of manufacturer’s software. All software and hardware for installation, operation and maintenance will be supplied to the City along with necessary technical support upon setup, if needed.

8. The Video Detection System shall utilize standard 24 volt logic signal outputs to interface with NEMA TS1/TS2, 170/179, 2070, or other future ATC controllers.

9. The Video Image Detection System must provide logic ground to all detector outputs that shall be active during programming of detection zone layouts.

10. All of the system’s micro-processing functions must be performed in the video unit, which must be located within the controller cabinet.
11. All equipment schematics and technical material must accompany any equipment supplied to the City of Las Vegas Traffic Electrical Field Operations, upon turn-on of the signal.

623 T.02.08 VEHICLE SIGNAL FACES

ADD THE FOLLOWING PARAGRAPH TO "A" OF THIS SUBSECTION:

5. Vehicle signal faces shall be ETL compliant. The ETL Listed Mark indicates that the manufacturer's production site conforms to a range of compliance measures and is subject to periodic follow-up inspections to verify continued conformance, and the product meets the minimum requirements of widely accepted product safety standards as determined through independent testing of a Nationally Recognized Testing Laboratory.

623 T.02.10 PEDESTRIAN SIGNAL FACES

ADD THE FOLLOWING PARAGRAPH TO "A.1" OF THIS SUBSECTION:

All pedestrian signal faces shall provide "Walking Person", "Hand", and "Countdown" messages as provided by **Duralight model #JXM-400-VIEIL** or **Dialight model #430-6479-001X** or approved equal (must be ETL compliant for consideration).

623 T.02.11 PEDESTRIAN PUSH BUTTONS:

DELETE THIS SUBSECTION IN ITS ENTIRITY AND REPLACE WITH THE FOLLOWING:

A. Mounting height of the pedestrian push button shall be 42" above the sidewalk.

B. All pedestrian push buttons **shall be either Campbell Company Advanced Accessible Pedestrian System, part numbers AAPS APB912 (buttons) with AAPS APC (controller), or Polara Navigator 2-Wire System** Audible-Tactile Pedestrian Push Button type, or approved equivalent, in accordance with the request from the Nevada Bureau of Services to the Blind and Visually Impaired. Equivalent systems shall conform to the audible-tactile pedestrian system specifications below.

C. AUDIBLE-TACTILE PEDESTRIAN SYSTEM SPECIFICATIONS

1. GENERAL DESCRIPTION

a) The Audible-Tactile pedestrian system shall consist of all electronic equipment, mounting hardware, power supplies, push buttons, and sign faces, which are designed to provide both a raised vibrating tactile arrow along with a variety of audible sounds for different traffic signal functions. The system shall consist of a Control Unit and Pole Mounting Assembly, as described below. Additionally, documentation shall include shop drawings for all equipment, electronic schematics, required voice setup software/ hardware, and installation/operations manuals.

2. FUNCTIONAL REQUIREMENTS

a) The system shall vibrate the tactile arrow during every time the WALK interval indication is displayed.

b) The system shall have the field-selectable function known as “Locating Beep.” This means that during the Flashing DONT WALK and the DONT WALK intervals, the system shall provide a steady, non changing, (constant dB level) pole locating tone that emanates directly in the vicinity of the Pedestrian Push Button.
c) The system shall have the field-selectable function known as “Extended Push Activation.” This means that the audible WALK message will only be activated and sound during the WALK interval if the button is depressed for a minimum of three (3) seconds. This audible WALK message shall be able to be field set to allow for automatically adjusting to ambient noise levels via control circuitry.
d) The system shall have the function referred to as “Voice Location Message.” This means that the location of the street to cross, and the intersection will be vocalized only when the button is depressed for a minimum of three (3) seconds. This shall be a field-settable option, and the volume shall be automatically adjusted to ambient noise levels
e) The audible messages must be easily programmable by City staff, with the needed hardware and software to be supplied by the system’s vendor.
f) Automatic volume adjustments for ambient noise shall be field selectable.

3. CONTROL UNIT

GENERAL DESCRIPTION
The equipment needed for the Control Unit must be able to be mounted in the Pedestrian Head Housing on the Traffic Signal Pole. It shall be powered from the 120 VAC, WALK/DONT WALK lamp indications in the housing. The unit shall conform to the following specifications.

a) POWER REQUIREMENTS: 115 VAC, 60Hz, (100 ma, typical)
b) Separate power inputs for “WALK” and “DONT WALK”, two ¼ AMP fuses mounted on the board
c) POWER SUPPLIED TO VIBRATOR: 12 VAC, .3A Typical, to operate during WALK interval only
d) AUDIO AMPLIFIER POWER OUTPUT: 10 W RMS into 8 ohms
e) VOLUME CONTROL: On board trimming potentiometer for overall adjustment
f) VOLUME CONTROL AUTOMATIC ADJUSTMENT RANGE: 28 Db
g) MICRPHONE FOR AMBIENT NOISE: Mounts in Pedestrian head housing. Frequency range: 170 Hz to 2.3 Khz
h) PED PUSH BUTTON INTERFACE: Accepts 12 to 24 Volts AC/DC imposed by connection to push button which will be terminated in an existing traffic signal controller cabinet
i) JUMPER SELECTABLE OPTIONS:
   i. Chirp
   ii. Cuckoo
   iii. Walk Message
   iv. Location Message if Available
   v. Extended Push Button Triggering
   vi. Locating Tone

j) MOUNTING: Mounts inside the pedestrian head housing using existing threaded holes in the rear wall on 9 ¼" centers. Designed to clear reflector in standard housing of dual incandescent pedestrian head. Not for use within the older, neon/transformer assemblies. The assembly shall accommodate a standard 9" X 12" pedestrian sign.

k) AUDIBLE LOCATING TONE: 880 Hz plus harmonics, 0.1 second duration, 1 second interval. Operates during flashing DONT WALK and solid DONT WALK indications, only

4. POLE MOUNTING ASSEMBLY

GENERAL DESCRIPTION: This equipment is the part that will be visible to the pedestrians. It is commonly referred to as the "Pedestrian Push Button Assembly." This shall contain the 2" ADA-compliant Pedestrian Push Button, the directional tactile arrow, the weatherproof speaker, and the appropriate informational sign for each location.

a) VIBRATOR POWER: 12 VAC, .3 A Typical
b) SPEAKER: 8 Ohms, 15 Watt maximum, weather-proof
c) PUSH BUTTON: Mounting height of the pedestrian push button shall be 42-inches above the sidewalk

5. MESSAGE MARKING

The Message Sign shall be an R10-3E sign, 9"x12" (size modified), per MUTCD 2009 edition, and shall be porcelain enameled metal.

623 T.02.12 FLASHERS

ADD THE FOLLOWING TO THIS SUBSECTION:

H. Solar Pedestrian Crosswalk Flashing Beacon System

Each system unit shall consist of a solar / battery system, an electronic control module, a wireless communication system to synchronize the flash for multiple system units, and a 12" circular yellow Light Emitting Diode (LED) signal indication and housing. A single unit may include two beacons, one for each direction. The number and configuration of Flashing Beacon units for each Pedestrian Crosswalk shall be as indicated on the contract drawings.

The system units shall be **Carmanah Model R820C Solar powered pedestrian activated flashing beacons**, **JSF Technologies Models AB-2412 (double head)** or **JSF Technologies Models AB-1412 (single head) Pedestrian activated crosswalk beacons,** or approved equal.

Other manufacturer units may be acceptable to the City of Las Vegas that meet or exceed the following specifications:

1. LED Module

a) The lens shall be 12 inches in diameter per latest edition of the MUTCD Section 4D.15
b) LEDs shall be color emitted
c) Lens may be same color or clear
d) LED power peak consumption to be 6 watts

2. Electronic Module

a) Electronics to be housed in a weatherproof metal casing with theft resistant locking hardware
b) Flash pattern and rate shall have multiple patterns with one pattern and rate to meet MUTCD, latest edition, Section 4K.01
c) System shall include energy management system to continuously monitor battery and solar intensity and shall have the ability to increase brightness in sunny conditions and increase longevity in overcast or night time conditions
d) System to continue to operate for a minimum of 30 days, without solar recharging with a set flash rate meeting the MUTCD specified flash pattern

3. Solar Panel Module

a) The solar system shall include one or more solar panels with a total solar collection surface area to be no larger than 16” x 16” for single flashing beacon units
b) Solar panel visibility to be discrete from ground level to reduce theft or threat of vandalism
c) Solar panel collection to be omni-directional as to not be dependent on orientation for maximum collection efficiency

4. Battery Module

a) System shall use commercial available lead-acid, cell batteries that are field replaceable
b) Battery module shall have a battery cooling system
c) Battery housing to be white for heat reflection, if external on flasher unit
d) Battery housing to be theft resistant
e) Battery housing shall have a hinged lid for battery access with theft resistant locking hardware
f) Batteries shall be mechanically secured within the battery housing

5. Flasher Unit

a) Flasher unit to be integrated with no external connected parts
b) Flasher housing to be black in color, or as specified in the Contract Drawings.
c) Flasher unit shall be powder coated cast aluminum
d) Complete flasher unit weight shall not exceed 60 lbs, including batteries
e) Flasher units shall have detachable metal backplates which shall be flat black in color
f) Flasher units shall have metal tunnel visors which shall be flat black in interior color

g) Flasher units shall be equipped with hardware and be capable of mounting to the top of a Clark County Area Standard 1-A pole with a 4.5” O.D. post top collar, or to the side of a Clark County Area Standard streetlight pole Flasher unit shall follow the provisions of the MUTCD, latest edition, Chapter 4K, Flashing Beacons

6. Activation and Operation

a) Each flashing beacon unit or units of a system shall be capable of being activated by a pedestrian push button, and shall operate for a set flash duration upon activation. System shall reset flash duration upon activations that occur mid-cycle. The flash duration shall be user configurable in the field from 5 – 60 seconds, in increments of 5 seconds or less. Each unit shall be able to transmit a wireless activation signal to other flashing beacon units in the system upon pedestrian activation. The wireless technology shall maintain a coordinated flash pattern (either alternating or unison) with all the beacons in the system throughout the duration of the activation

b) System coordination must be repeatable upon testing for at least 50 activations. Both sides must be activated, flash, and stop flashing at the same time consistently

c) System must be able to power and be activated by a compatible pedestrian pushbutton. The button shall be capable of providing an audible tone and/or beep and a visible momentary or latched LED light to notify the user the switch was activated. The pedestrian pushbutton shall be vandal resistant.

7. Environmental Specifications

a) The system shall be able to withstand and operate at temperature extremes of 10 deg F to 165 deg F

b) The system shall be designed and constructed to withstand wind loads in conformance with the requirements of the AASHTO publication, "Standard Specifications for Structural Supports of Highway Signs, Luminaries and Traffic Signals", 4th Edition, with latest interims

c) The electronic circuit board housing, wire harnessing and connectors shall be designed in accordance to IEC International Standard 60529, Ingress Protection IP67 requiring that the enclosure be dust tight and remain completely sealed when immersed in water to a depth of 1 meter for 1 hour

d) The LED Module shall meet the following environmental tests as specified in the ITE Vehicle Traffic Control Signal Heads, Light Emitting Diode (LED) Circular Signal Supplement:
Mechanical vibration: MIL-STD-883
Temperature cycling: MIL-STD-883
Moisture resistance: MIL-STD-810F

8. Warranty

a) The system, including battery pack, solar panel, LED module and all components, shall be guaranteed by the manufacturer for a minimum of three years

b) Warranty shall include all parts of the unit including batteries

623 T.02.13 TRAFFIC SIGNAL POLES:

DELETE PARAGRAPH "A" IN ITS ENTIRETY AND REPLACE WITH THE FOLLOWING:

A. All traffic signal poles shall consist of continuous, tapered round steel pole shaft of the length specified, pole cap, anchor bolt cover, and hand hole covers(s), with the bolts, nuts, and washers necessary to complete the installation of the pole shaft. Multi-sided steel traffic signal poles are not accepted.

DELETE PARAGRAPH "B" IN ITS ENTIRETY AND REPLACE WITH THE FOLLOWING:

B. The traffic signal and luminaire mast arms shall consist of continuous, tapered round steel tubes of the length specified, mast arm end caps and bolts, nuts, and washers necessary to complete the installation of the mast arms. Multi-sided steel traffic signal and luminaire mast arms are not accepted.

DELETE PARAGRAPH "K" IN ITS ENTIRETY AND REPLACE WITH THE FOLLOWING:

K. The pole shafts shall be of round cross section, with a minimum outer diameter at the base as shown in the Uniform Standard Drawings for the type of pole specified, and shall uniformly decrease in diameter at the rate of 0.14 inches per foot of length.

1. Pole shafts shall be straight, with a permissive variation not to exceed ¼ inch for each 10 feet of pole shaft.

   a) A 30-foot pole would have ¾ inch allowable deviation at the midpoint of the pole shaft.
   b) A 20-foot shaft would have a ½ inch allowable deviation.
   c) A 10-foot shaft could deviate a maximum of ¼ inch at the midpoint.

ADD THE FOLLOWING PARAGRAPHS TO THIS SUBSECTION:

W. Tenons

1. The mast arm is to be fabricated with end tenon only. The end tenon shall be factory installed and the remaining tenons shall be fabricated in the field at the locations shown on the plans or as directed by the Traffic Engineer and/or his authorized representative.

2. For tenon fabrication details see Clark County Area Uniform Standard Drawing No. 808 and No. 810.

X. Welds

1. All welding shall conform to AWS D 2.0, "Specification for Welded Highway and Railway Bridges", and to any additional requirements in this subsection.

2. All exposed welds, shall be painted as provided for repairing damaged galvanized surfaces.

3. All welders must be certified by the American Welding Society (AWS) or similar organization in the welding of steel and galvanized steel.

4. All exposed weld joints shall be treated with rust inhibitors (i.e. Chemtrek or equivalent) and shall be painted as provided for repairing damaged galvanized surfaces.

623 T.02.16 INTERNALLY ILLUMINATED STREET NAME SIGNS

REPLACE SENTENCES 3 THROUGH 9 OF PARAGRAPH "C" WITH THE FOLLOWING:

3. Sign lettering shall be as shown on the contract plans and shall conform to the 2009 edition of the M.U.T.C.D.

4. The sign face shall have the compass direction of the location marked in the upper left corner of each sign panel with a 5-inch upper case letter (N, S, E or W).

5. The street name suffix (Street, Way, Blvd., and so forth) shall be displayed in the upper right corner of the sign panel.

6. The street address number of the location shall be shown at the lower right corner in 5-inch upper case letters and numerals.

7. Engineer approval is required for the sign faces prior to fabrication.

ADD THE FOLLOWING PARAGRAPHS TO THIS SUBSECTION:

G. Internally Illuminated street name signs shall be wired to the luminaries photocell for control with No. 10 AWG THW copper stranded wire. In the event there is no luminaire on the traffic signal pole, a 1000 watt photoelectric control shall be mounted on the pole cap.

H. Internally Illuminated street name signs shall be LED and shall be one of the following products, or approved equal:

NUART LIGHTING LED EDGE LIT SERIES with ASTM Type IX retroreflective sheeting, and bandable mounting with L-brackets;

TEMPLE EDGE·LIT 96" Model R409A with ASTM Type IX retroreflective sheeting, and under·hang mast arm mount;
SOUTHERN MANUFACTURING Part No. CP818DTJNNAAD1 with 8' x 18" Double Face Viewable Clean Profile LED; Top Mount, bandable mounting with L- brackets, "L" Adapter, No Photocell, Monarch Black, DG-Reflective / EC Film (Green); **Overall size: 8' x 21"**

ADD THE FOLLOWING SUBSECTION TO THIS SECTION:

623 T.02.19 LUMINAIRE ON SIGNAL POLES

A. Luminaires on all signal poles shall be an approved LED equal to a 400 Watt High Pressure Sodium cutoff luminaire, G.E. M400A, with MC-111 distribution, or other approved LED light to satisfied (HIGH Pedestrian) light level as shown on USC 300.S3.

TABLE 2

REQUIRED ILLUMINANCE VALUES FOR SIGNALIZED INTERSECTIONS

ROADWAY CLASS	R.O.W. WIDTHS	MIN. AVE. ILLUMINANCE BY PEDESTRIAN AREA CLASSIFICATION			SIDEWALK / WALKWAY LIGHTING LEVELS		
		HIGH	MEDIUM	LOW	MIN. AVG. ILLUMINANCE	MIN. ILLUMINANCE	UNIFORMITY AVG./ MIN.
ARTERIAL / ARTERIAL	100' OR GREATER BY 100' OR GREATER BY	3.4 FC	2.6 FC	1.8 FC	2.0 FC	1.0 FC	4:1
ARTERIAL / MAJOR COLLECTOR	100' OR GREATER BY 00' OR GREATER BY	2.9 FC	2.2 FC	1.5 FC	2.0 FC	1.0 FC	4:1
ARTERIAL / MINOR COLLECTOR - RESIDENTIAL	100' OR GREATER BY 79' OR LESS	2.6 FC	2.0 FC	1.3 FC	2.0 FC	1.0 FC	4:1
MAJOR COLLECTOR / MAJOR COLLECTOR	80' - 99' BY 80' - 99'	2.4 FC	1.8 FC	1.2 FC	2.0 FC	1.0 FC	4:1
MAJOR COLLECTOR / RESIDENTIAL	80' - 99' BY 79' OR LESS	2.1 FC	1.6 FC	1.0 FC	2.0 FC	1.0 FC	4:1

B. Special lighting requirements

1. Downtown Centennial area

a) Signal pole luminaires shall be an approved LED equivalent to a Gardco CA22L-LED light, or other approved LED light to satisfied (HIGH Pedestrian) light level as shown on USC 300.S3.

CONSTRUCTION

623 T.03.01 PAINTING

ADD THE FOLLOWING SUBSECTION TO THIS SECTION:

B. Special City of Las Vegas Areas

1. Unless otherwise specified, traffic signal system equipment located within the "special areas" noted below shall be finished with the color as indicated:

   a) Downtown Centennial Plan area: **RAL 6012 "Black Green".**

2. The following signal system components located in the special areas noted above shall be painted accordingly:

   a) Traffic signal pole
   b) Traffic signal mast arm
   c) Traffic signal tenons
   d) Traffic luminaire arm
   e) Traffic signal luminaire head (reference Subsection 623 T.02.19 LUMINAIRE ON SIGNAL POLES of these special provisions)

3. Traffic signal poles, mast arms, luminaire arms and other elements specified to be painted shall be factory finished with a high-build, acrylic polyurethane enamel. Alternatively, a polyester TGIC or urethane polyester powder coat finish may be used. Equipment to be painted/coated shall be prepared and painted per manufacturer's specifications.

4. The traffic signal mast arm shall be delivered with no tenons mounted to the mast arm. After the traffic signal pole foundation is constructed, the tenons shall be fabricated in the field at the locations shown on the plans or as directed by the Traffic Engineer. All welding shall conform to 623 T.02.13 of the CCAUSS and these Special Provisions. After installation of the tenons, the mast arm shall be shop painted and finished to match the traffic signal pole. No brushes or rollers shall be used to apply primers or paint except as approved by the Engineer.

STREET LIGHTING SECTION

623 L.02.03 STREET LIGHTING LUMINAIRES

DELETE THIS SECTION IN ITS ENTIRETY AND REPLACE WITH THE FOLLOWING:

A. The standard luminaire shall be as specified in the Contract Drawings.

Streetlight Luminaires shall be LED and provide light level to meet the requirement as specified on USD 300.S3. For the Cobra head style, the luminaire can be GE EVOLVE LED ROADDWAY SCALABLE SPEC GRAD COBRAHEAD, PHILIPS HADCO LED COBRAD HEAD, or approved equal by the Engineer. Roadway light fixture should be type III distribution. Lighting study will be required.

TABLE 1

REQUIRED ILLUMINANCE VALUES FOR ROADWAYS					
ROADWAY CLASS	R.O.W. WIDTHS	ROADWAY LIGHTING ILLUMINANCE LEVELS		SIDEWALK / WALKWAY ILLUMINANCE LIGHTING LEVELS	
		MIN. AVG.	UNIFORMITY AVG./MIN.	MIN. ILLUMINANCE	UNIFORMITY AVG./ MIN.
ARTERIAL	100' OR GREATER	1.58 FC	3:1	0.2 FC	4:1
MAJOR COLLECTOR	80' TO 99'	0.84 FC	4:1	0.2 FC	4:1
MINOR COLLECTOR	60' TO 79'	0.38 FC	6:1	0.08 FC	6:1
RESIDENTIAL	51' OR LESS	0.38 FC	6:1	0.08 FC	6:1

In DOWNTOWN CENTENNIAL area, all streetlight shall be concrete black pole with single or dual LED lighting (Roadway side 160w led and Pedestrian side lighting 110w led – rotated 180degre). The street light pole can either be the Ameron or Stresscrete - 26'-3" pole. The length of streetlight pedestrian side arm varies with the sidewalk width. For sidewalk of 10' (including amenity zone) – the arm length should be 4'. For 15' sidewalk, the arm length should be 6' and for greater than 15' sidewalk or meandering sidewalk, streetlight arm can be 8' to match the street side lighting. For area where sidewalk meander more than 15' from back of curb, trail lighting maybe required to meet the lighting level. The lighting fixtures are to be the Philips Gardco ROUND 10 – CA22L or other approved equal LED light that will meet the aesthetic and the light level requirement as specified on USD 300.S3. Additionally, for areas where high amounts of pedestrians are anticipated, the light level shall be increased to meet Table 4 of the ANSI/IES RP-8-14 (below). Lighting study will be required. Special foundations for the black concrete pole are also required see below.

TABLE 4 - RECOMMNEDED VALUES FOR HIGH PEDESTRIAN CONFLICT AREAS			
MAINTAINED ILLUMINANCE VALUES FOR WALKWAYS			
	E_{avg} (lux/fc)	Ev_{min}(lux/fc)	E_{avg}/E_{min}*
Mixed Vehicle and Pedestrian	20.0/2.0	10.0/1.0	4.0
Pedestrian Only	10.0/1.0	5.0/0.5	4.0
E_{avg} - minimum maintained average horizontal illuminance at pavement			
E_{min} - minimum horizontal illuminance at pavement			
EV_{min} - minimum vertical lluminance at 1.5m above pavement			
*Horizontal only			

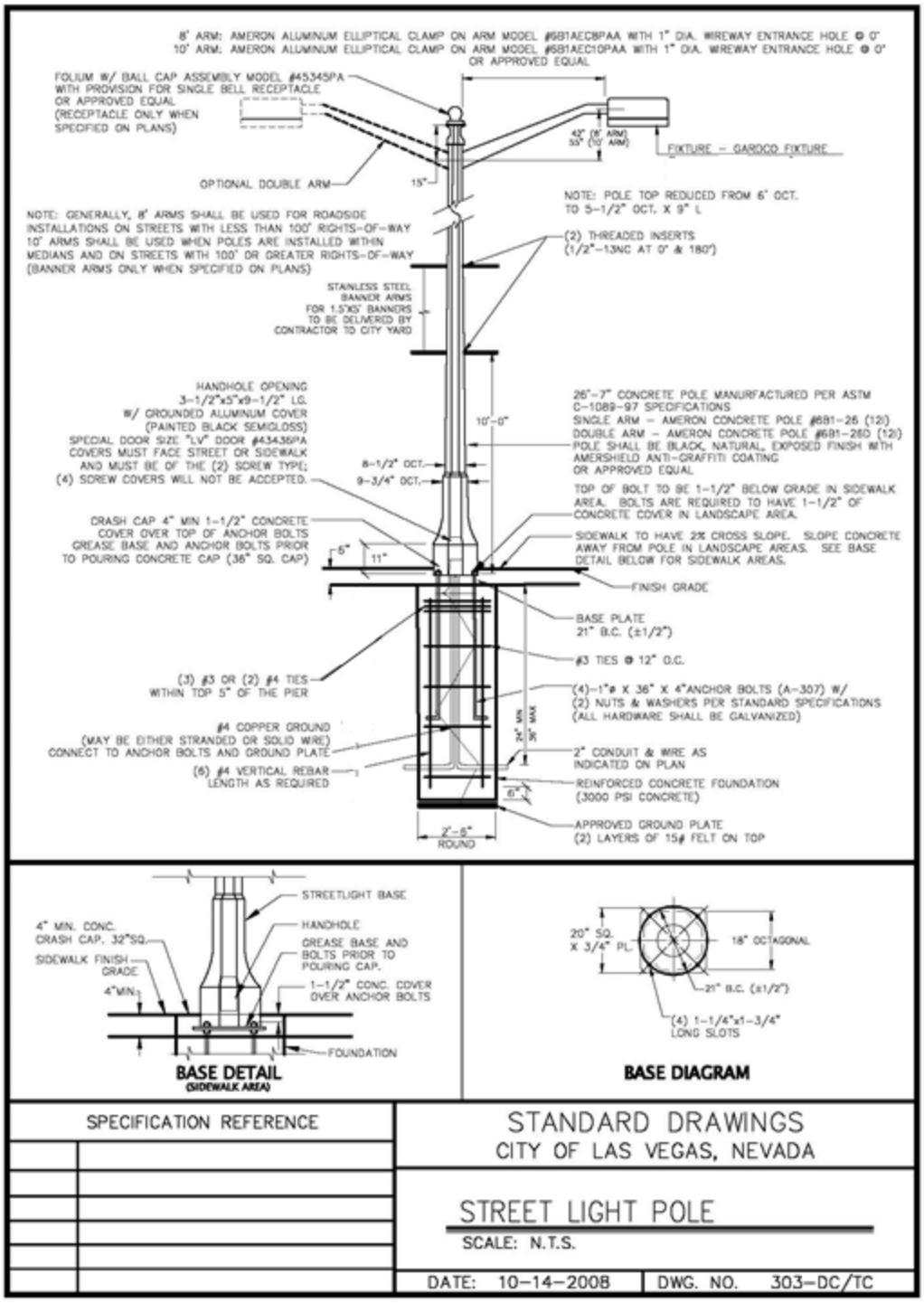
8' ARM: AMERON ALUMINUM ELLIPTICAL CLAMP ON ARM MODEL #6B1AEC8PAA WITH 1" DIA. WIREWAY ENTRANCE HOLE @ 0°
10' ARM: AMERON ALUMINUM ELLIPTICAL CLAMP ON ARM MODEL #6B1AEC10PAA WITH 1" DIA. WIREWAY ENTRANCE HOLE @ 0°
OR APPROVED EQUAL
FOLIUM W/ BALL CAP ASSEMBLY MODEL #45345PA
WITH PROVISION FOR SINGLE BELL RECEPTACLE
OR APPROVED EQUAL
(RECEPTACLE ONLY WHEN
SPECIFIED ON PLANS)
42" (8' ARM)
55" (10' ARM)
FIXTURE – GARDCO FIXTURE
OPTIONAL DOUBLE ARM
15"
NOTE: POLE TOP REDUCED FROM 6" OCT.
TO 5-1/2" OCT. X 9" L
NOTE: GENERALLY, 8' ARMS SHALL BE USED FOR ROADSIDE
INSTALLATIONS ON STREETS WITH LESS THAN 100' RIGHTS-OF-WAY
10' ARMS SHALL BE USED WHEN POLES ARE INSTALLED WITHIN
MEDIANS AND ON STREETS WITH 100' OR GREATER RIGHTS-OF-WAY
(BANNER ARMS ONLY WHEN SPECIFIED ON PLANS)
(2) THREADED INSERTS
(1/2"-13NC AT 0° & 180°)
STAINLESS STEEL
BANNER ARMS
FOR 1.5'X5' BANNERS
TO BE DELIVERED BY
CONTRACTOR TO CITY YARD
HANDHOLE OPENING
3-1/2"x5"x9-1/2" LG.
W/ GROUNDED ALUMINUM COVER
(PAINTED BLACK SEMIGLOSS)
SPECIAL DOOR SIZE "LV" DOOR #43436PA
COVERS MUST FACE STREET OR SIDEWALK
AND MUST BE OF THE (2) SCREW TYPE;
(4) SCREW COVERS WILL NOT BE ACCEPTED.
10'-0"
26'-7" CONCRETE POLE MANUFACTURED PER ASTM
C-1089-97 SPECIFICATIONS
SINGLE ARM – AMERON CONCRETE POLE #6B1-26 (12)
DOUBLE ARM – AMERON CONCRETE POLE #6B1-26D (12)
POLE SHALL BE BLACK, NATURAL, EXPOSED FINISH WITH
AMERSHIELD ANTI-GRAFFITI COATING
OR APPROVED EQUAL
8-1/2" OCT.
9-3/4" OCT.
TOP OF BOLT TO BE 1-1/2" BELOW GRADE IN SIDEWALK
AREA. BOLTS ARE REQUIRED TO HAVE 1-1/2" OF
CONCRETE COVER IN LANDSCAPE AREA.
CRASH CAP 4" MIN 1-1/2" CONCRETE
COVER OVER TOP OF ANCHOR BOLTS
GREASE BASE AND ANCHOR BOLTS PRIOR
TO POURING CONCRETE CAP (36" SQ. CAP)
SIDEWALK TO HAVE 2% CROSS SLOPE. SLOPE CONCRETE
AWAY FROM POLE IN LANDSCAPE AREAS. SEE BASE
DETAIL BELOW FOR SIDEWALK AREAS.
5"
11"
FINISH GRADE
BASE PLATE
21" B.C. (±1/2")
#3 TIES @ 12" O.C.
(3) #3 OR (2) #4 TIES
WITHIN TOP 5" OF THE PIER
(4)-1"ø X 36" X 4"ANCHOR BOLTS (A-307) W/
(2) NUTS & WASHERS PER STANDARD SPECIFICATIONS
(ALL HARDWARE SHALL BE GALVANIZED)
24" MIN
36" MAX
#4 COPPER GROUND
(MAY BE EITHER STRANDED OR SOLID WIRE)
CONNECT TO ANCHOR BOLTS AND GROUND PLATE
2" CONDUIT & WIRE AS
INDICATED ON PLAN
(6) #4 VERTICAL REBAR
LENGTH AS REQUIRED
REINFORCED CONCRETE FOUNDATION
(3000 PSI CONCRETE)
6"
APPROVED GROUND PLATE
(2) LAYERS OF 15# FELT ON TOP
2'-6"
ROUND
STREETLIGHT BASE
4" MIN. CONC.
CRASH CAP. 32"SQ.
HANDHOLE
GREASE BASE AND
BOLTS PRIOR TO
POURING CAP.
SIDEWALK FINISH
GRADE
4"MIN.
1-1/2" CONC. COVER
OVER ANCHOR BOLTS
FOUNDATION
BASE DETAIL
(SIDEWALK AREA)
20" SQ.
X 3/4" PL.
18" OCTAGONAL
21" B.C. (±1/2")
(4) 1-1/4"x1-3/4"
LONG SLOTS
BASE DIAGRAM
SPECIFICATION REFERENCE
STANDARD DRAWINGS
CITY OF LAS VEGAS, NEVADA
STREET LIGHT POLE
SCALE: N.T.S.
DATE: 10-14-2008
DWG. NO. 303-DC/TC

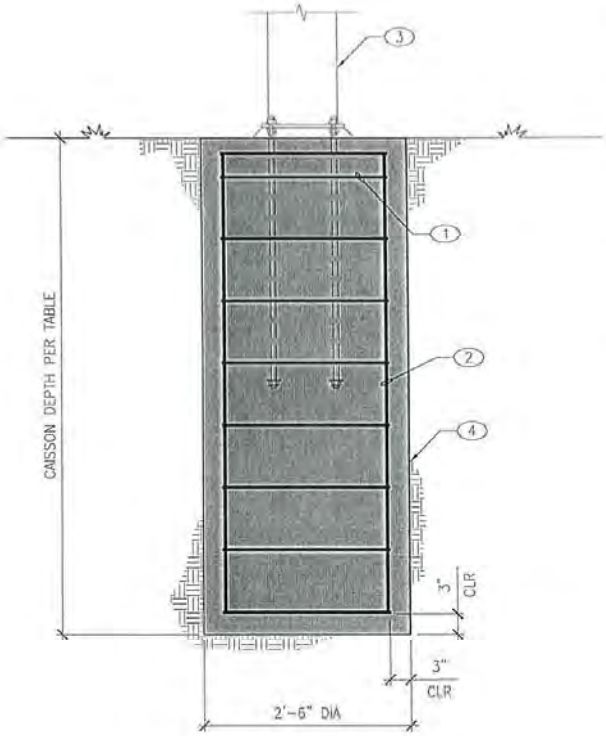

KEYNOTES:

1. (2) #4 TIES IN TOP 6" AND AT 9" O.C. (Fy = 60 KSI)
2. (9) #6 VERTS DISTRIBUTED EVENLY AROUND PERIMETER. (Fy = 60 KSI)
3. LIGHT POLE AND ANCHORAGE BY OTHERS
4. 4500 PSI MIN CONCRETE CAISSON

NOTES:

A. LUMINAIRE EFFECTIVE PROJECTED AREA (E.P.A) = 1.9 FT^2

B. ALL LOADS DETERMINED USING AASHTO STD SPECS FOR STRUCTURAL SUPPORTS FOR HIGHWAY SIGNS, LUMINAIRES, AND TRAFFIC SIGNALS (2009 ED. W/ 2011 INTERIM REVISIONS)

C. ALL POLE BANNER AREAS HAVE BEEN OMITTED FROM THE ANALYSIS. "BREAKAWAY HINGES" SHALL BE USED FOR THE ATTACHMENT OF THE BANNER TO THE POLE.

LIGHT POLE CAISSON DEPTH (AASHTO METHOD)

AMERON LIGHT POLE	BASE SHEAR (KIPS)	BASE MOMENT (K-FT)	SOIL TYPE			
			SAND/GRAVEL ϕ MIN = 30° γ = 110 PCF	STIFF CLAY (COHESION,C=1.0 KSF)	MEDIUM CLAY (COHESION,C=0.600 KSF)	SOFT CLAY (COHESION,C=0.250 KSF)
6B1-21 DUAL 10' ARM	0.67	11.06	4'-8"	5'-6"	7'-4"	9'-6"
6B1-26 SINGLE 12' MAX ARM	0.72	13.23	5'-0"	6'-9"	7'-8"	10'-0"
6B1-26 DUAL 12' MAX ARM	0.88	18.30	5'-6"	7'-3"	8'-4"	11'-0

NOTES:

A. TABLE VALUES REFLECT A 3.0 FACTOR OF SAFETY USED IN THE BROHM'S DRILLED SHAFT DESIGN EQUATIONS.

B. SOIL TYPE SHALL BE DETERMINED BY TAKING UNDISTURBED SAMPLES. PROJECT ENGINEER SHALL DETERMINE NUMBER OF REQUIRED SAMPLES.

PROFESSIONAL ENGINEER - STATE OF NEVADA
GREG A. MEYER
EXP. 12-31-13
CIVIL/ STRUCTURAL
No.015053

LIGHT POLE CAISSON

NO SCALE

JUL 23 2012

ENGINEERING SYSTEM SOLUTIONS
7312 W. CHEYENNE AVE, STE #1
LAS VEGAS, NEVADA 89129
Phone: (702) 616-3107
Fax: (702) 616-3725
www.es2eng.com

PROJECT: LIGHT POLE CAISSON
LAS VEGAS, NV

PROJECT NUMBER: STR12.1026 ASA2

DATE: 7/17/2012

SHEET NUMBER: S1

REVISED PROPOSAL

REV.	DATE	DESCRIPTION	DRN.	APPR.
D	10/02	REDRAWN, ADDED DOOR P/N#, CHG'D TO CLAMPS. & CHG'D TO MOD 8D	M.L.	

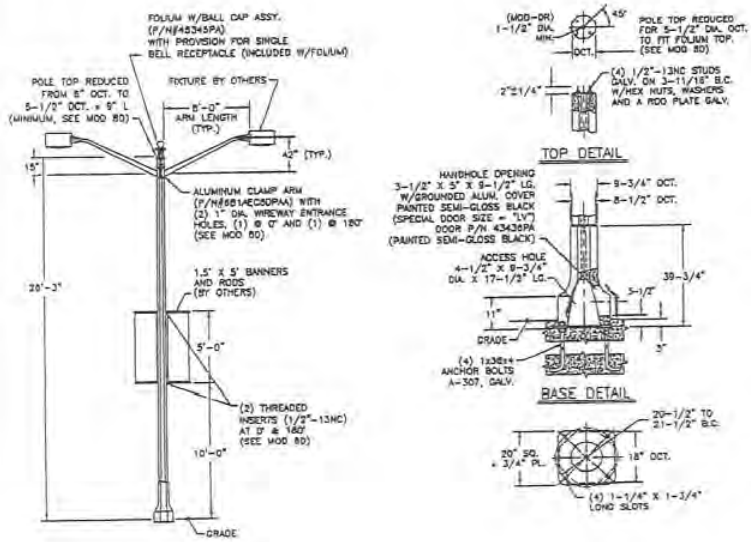

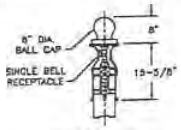

FOLIUM W/BALL CAP DETAIL

( ) POLES REQUIRED, EACH WITH 45345PA & 581AEC5DPAA ASSEMBLIES.

NOTES:
1. CONCRETE MIX (12I): BLACK, NATURAL, EXPOSED FINISH WITH AMERSHIELD ANTI-GRAFFITI COATING.
2. f'c @ 28 DAYS = 6,000 PSI, USING SPUN CYLINDER TEST.
3. f'c @ 28 DAYS = 5,000 PSI, USING ASTM C-31 CYLINDER TEST.
4. POLES MANUFACTURED PER ASTM C-1089-97 SPECIFICATIONS.
5. BASEPLATE ASTM A-36 FULLY PRESTRESSED WITH (8) 5/16" DIA. A-416 WIRES (7-STRAND CABLES).
6. SPECIAL DOOR SIZE = "LV" (DOOR WITH GROUNDING BOLT).
7. MOD DR: DRILL RACEWAY FOR MINIMUM CLEARANCE.
8. MOD 8D: DOUBLE ARM CABLE ENTRANCE, DOUBLE BANNER INSERTS, & REDUCED TOP DIAMETER.
9. DOOR PAINTED SEMI-GLOSS BLACK (PA).

APPROVED BY: DATE

Ameron POLE PRODUCTS & SYSTEMS

PLS – CITY OF LAS VEGAS STANDARDS
6B1-25 (12I) POLE WITH DOUBLE 8' LMA ASSEMBLY

THIS DOCUMENT CONTAINS INFORMATION WHICH IS PROPRIETARY TO AMERON, IT SHALL NOT BE REPRODUCED, USED OR DISCLOSED TO ANYONE WITHOUT THE PRIOR WRITTEN PERMISSION OF AMERON.

DRAWN: G.C.	07/98	SCALE N.T.S.	DWG. NO. SK074598	REV D
CHK'D:				

REV.	DATE	DESCRIPTION	DRN.	APPR.
A	9/02	ADDED DOOR P/N	RS	MJL

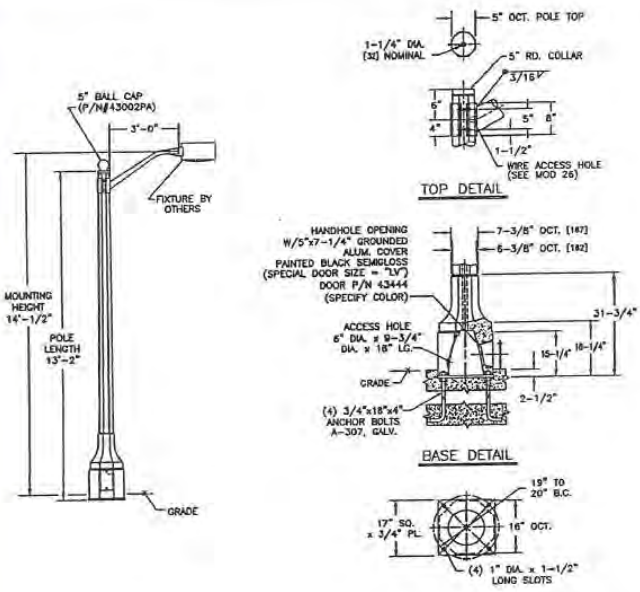

( ) POLES REQUIRED WITH MOAEC3PAA LMA ASSEMBLY.

NOTES:
1. CONCRETE MIX (12I): BLACK, NATURAL, EXPOSED FINISH WITH AMERSHIELD ANTI-GRAFFITI COATING.
2. f'c @ 28 DAYS = 6,000 PSI, USING SPUN CYLINDER TEST.
3. f'c @ 28 DAYS = 5,000 PSI, USING ASTM C-31 CYLINDER TEST.
4. POLES MANUFACTURED PER ASTM C-1089-97 SPECIFICATIONS.
5. BASEPLATE ASTM A-36 FULLY PRESTRESSED WITH (4) 5/16" DIA. A-416 WIRES (7-STRAND CABLES).
6. SPECIAL DOOR SIZE = "LV" (DOOR WITH GROUNDING BOLT).
7. MOD 26: WIRE ACCESS HOLE FOR CLAMP ARM.
8. SPECIFY DOOR COLOR.

APPROVED BY: DATE

Ameron POLE PRODUCTS & SYSTEMS

PLS – CITY OF LAS VEGAS STANDARDS
5B7-13 (12I) POLE WITH 3' LMA ASSEMBLY

THIS DOCUMENT CONTAINS INFORMATION WHICH IS PROPRIETARY TO AMERON, IT SHALL NOT BE REPRODUCED, USED OR DISCLOSED TO ANYONE WITHOUT THE PRIOR WRITTEN PERMISSION OF AMERON.

DRAWN: M.L.	08/02	SCALE N.T.S.	DWG. NO. SK084802	REV A
CHK'D:				

ITEM #16

623 L.03.03 ELECTRICAL TESTING

ADD THE FOLLOWING PARAGRAPH TO THIS SUBSECTION:

B. The Contractor shall be required to submit record drawings prior to any inspections being performed. He and/or his representative shall be present at the project location during the maintaining agency's inspection of the streetlight installation.

END OF SECTION 623

SECTION 628 – TRAFFIC STRIPING, PAVEMENT MARKINGS, AND CURB MARKINGS

DESCRIPTION

628.01.01 GENERAL

ADD THE FOLLOWING TO THIS SUBSECTION:

D. Prior to using any material, the Contractor shall provide the Engineer with a written "Certification of Compliance" from the manufacturer of the material. The certification shall include the manufacturer's name, business address and location of the manufacturing plant. It shall identify the specifications and include one copy. It shall show the quantity of materials supplied for each color, batch number and date of manufacture.

E. Manufacturer's lab test results must be supplied upon request of the Engineer.

MATERIAL

628.02.01 MATERIALS FOR TRAFFIC STRIPING, PAVEMENT MARKING AND CURB MARKING

DELETE PARAGRAPH "E.2" AND REPLACE WITH THE FOLLOWING:

E. 2. If, for any reason, the markings fail to perform as specified, the Contractor, under this warranty, shall completely remove the old markings and apply new markings at no additional cost to the Contracting Agency. Removal shall be by wet sandblasting or other method authorized by the Engineer.

ADD THE FOLLOWING TO THIS SUBSECTION:

F. No pavement marking material shall be used which is not on the Qualified Products Lists (QPL) established by the Nevada Department of Transportation (NDOT) unless otherwise specified.
   1. Liquid Pavement Marking (LPM) shall be either a polyurea or epoxy paint formulation.
   2. Pavement Marking Film shall be Type II from the NDOT QPL

G. The following materials are acceptable for parking lots:
   1. Ennis # 985691 Paint, Traffic RD White
   2. Ennis # 985697 Paint, Traffic RD Yellow
   3. Ennis # 985154 Paint, Traffic RD Red (for Curb)
   4. Vista Paint # 6800 On-Line Semi-Gloss Traffic Marking Paint Blue (for Handicap parking)

H. The following materials shall be used for replacement of the existing green bike lane on Bonneville Avenue, east of Grand Central Parkway only:
   1. Catek, Inc., T-28 Acrylic Based Resin System and Anti-Skid Surfacing

I. All other new green bike lanes constructed with the Project shall be Preformed Thermoplastic Green Bike Lane Material, shall be a minimum thickness of 90 mils (2.29mm), and per the NDOT QPL.

628.03.02 EQUIPMENT

DELETE PARAGRAPH "G" AND REPLACE WITH THE FOLLOWING:

G. Preformed Thermoplastic markings require sealers and the use of a propane torch or radiant heater as recommended by the manufacturer to fuse markings to asphalt and Portland cement concrete pavements by means of heat.

CONSTRUCTION

628.03.04 PREPARATION OF EXISTING SURFACES

ADD THE FOLLOWING TO THIS SUBSECTION:

D. Areas receiving slurry seal will be allowed to fully cure for a minimum of ten (10) days before application of the crosswalks, stop bars, arrows, epoxy or painted bike lanes and symbols and permanent raised pavement markers.

ADD THE FOLLOWING SUBSECTION TO THIS SECTION:

628.03.70 TEMPORARY MARKINGS

A. When otherwise not shown on the plans, detour transitional traffic line striping shall have a minimum taper of 20:1 for temporary striping and 30:1 for permanent striping. Temporary traffic lanes shall be at least ten (10) feet (3 meters) wide and no lane shall encroach within five (5) feet (1.5 meters) of an open excavation or within two (2) feet (0.7 meters) of longitudinal curb.

END OF SECTION 628

SECTION 630 – SANITARY SEWERS

DESCRIPTION

630.01.01 WORK INVOLVED

ADD THE FOLLOWING TO THIS SUBSECTION:

B. This work shall consist of construction of a wastewater collection pipe and sanitary sewer manholes as shown on the Contract Drawings.

C. This work shall also consist of removing and replacement of an existing sewer manhole. In such case, the manhole will be removed in such a manner that the flow of the existing sewer is maintained.

D. This work shall also consist of preparing utility final location information as described on the project drawings and in Section 622 of these Special Provisions.

ADD THE FOLLOWING SUBSECTION TO THIS SECTION:

630.01.70 STANDARDS

A. All sanitary sewer improvements shall be constructed in accordance with the Southern Nevada Design and Construction Standards for Wastewater Collection Systems, most recent edition.

MATERIALS

ADD THE FOLLOWING SUBSECTION TO THIS SECTION:

630.02.02 MANHOLES

E. Cast-in-place and precast manhole bases will be allowed for new construction of sewer pipe.

CONSTRUCTION

ADD THE FOLLOWING SUBSECTION TO THIS SECTION:

630.03.70 MANHOLE ADJUSTMENT

A. When adjusting manholes, all components must be set in a bed of grout: Burke Type V nonmetallic, nonshrink. Burke can be mixed with equal parts of sand and Type V cement for components, but shall be used full strength in pipe inverts.

B. Range of grade ring height allowed for new manhole construction or existing manhole adjustment shall be 0 to 12 inches in accordance with the Design and Construction Standards for Wastewater Collection Systems, Drawing No. SD-5.

C. Class A concrete collars for sanitary sewer manholes shall be constructed in accordance with the Design and Construction Standards for Wastewater Collection Systems, Drawing No. SD-4.

D. When adjusting manholes, Contractor shall install plywood covers in sanitary sewer manhole inverts as well as steel plate covers over manholes (after manhole rings/frames are removed) to prevent debris from entering sewer manholes and corresponding lines. Debris in the manholes shall be removed prior to plywood removal. Plywood and steel covers for manholes shall be installed and removed in the presence of the CITY utilities inspector. All debris dropped into the sewer manholes and corresponding lines shall be retrieved at Contractor's expense. Contractor shall clean (e.g., jet vac or equivalent) the debris out of the affected manholes and/or sewer lines in the presence of the City's representative and approved by the Owner.

END OF SECTION 630

SECTION 699

SITE FURNISHINGS

DESCRIPTION

699.01.01 GENERAL

A. For Local Public Agency Infrastructure along Martin Luther King Boulevard, Grand Central Parkway, Charleston Boulevard, Alta Drive and other City maintained streetscapes, the Design Build Contractor shall follow the design Standards set forth in the City's Downtown Centennial Plan Standards with the exceptions set forth in this Special Provision and/or as shown on the plans.

B. This special provision covers the quality and kind of materials to be used in the installation of:
   1. Street Benches
   2. Trash Receptacles
   3. Bike Racks
   4. Tree Grate
   5. Sidewalk Concrete Finish

MATERIALS

699.02.01 STREET BENCHES

A. Street benches shall meet the requirements of the attached detail herein.

699.02.02 TRASH RECEPTACLES

A. Street benches shall meet the requirements of the attached detail herein.

699.02.03 BIKE RACKS

A. Bike rack shall use "hoop rack" design, be powder coat finish with blue color manufactured by Dero Bike Rack Co., American Bicycle Security Company, or approved equal.

699.02.04 TREE GRATE

A. Tree grates shall follow the City's Downtown Centennial Plan Standards.

699.02.05 SIDEWALK AND ALLEY CONCRETE FINISH

A. Sidewalk panels shall be 5'x5' window pane style gray concrete with broom finish edging.

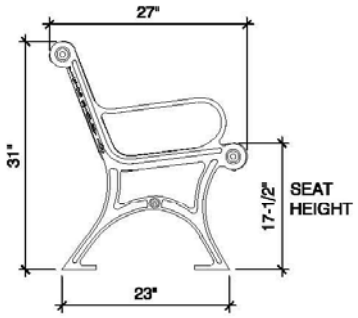

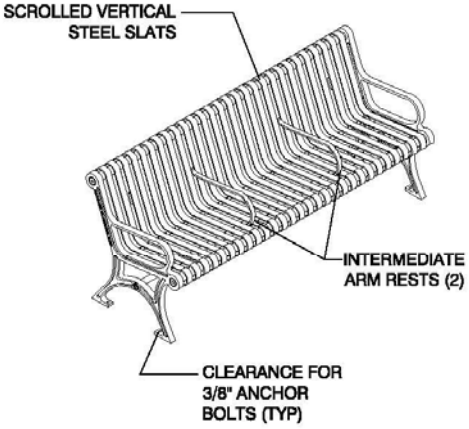

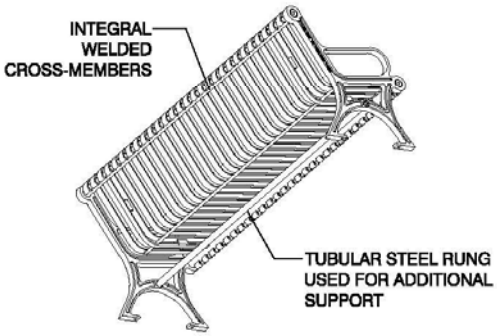

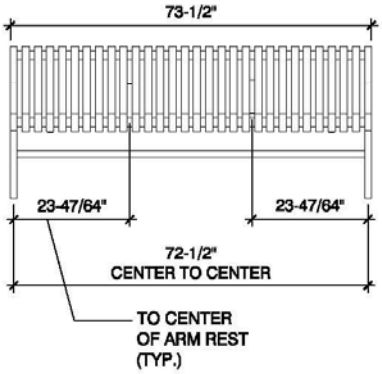

NOTES:

1. ALL FABRICATED METAL COMPONENTS SHALL BE STEEL SHOTBLASTED, ETCHED, PHOSPHATIZED, PREHEATED, AND ELECTROSTATICALLY POWDER-COATED WITH T.G.I.C. POLYESTER POWDER COATINGS. PRODUCTS SHALL BE FULLY CLEANED AND PRETREATED, PREHEATED AND COATED WHILE HOT TO FILL CREVICES AND BUILD COATING FILM. COATED PARTS SHALL THEN BE FULLY CURED TO COATING MANUFACTURER'S SPECIFICATIONS. THE THICKNESS OF THE RESULTING FINISH COAT AVERAGES 8-10 MILS.
2. IT IS NOT RECOMMENDED TO LOCATE ANCHOR BOLTS UNTIL BENCH IS IN PLACE. PERMANENTLY AFFIX TO THE GROUND. CONSULT YOUR LOCAL CODES FOR REGULATIONS.
3. ANCHOR BOLTS TO BE PROVIDED BY CONTRACTOR.

N.T.S.

F:\PW_ENG_DESIGN\DESIGN\DESIGN\CENTENNIAL STANDARDS\DWG\FOR GINA\DOWNTOWN_STEEL_BENCH.DWG

12/16/14

DEPARTMENT OF PUBLIC WORKS CAPITAL PROJECT MANAGEMENT DATE: DEC 2014 DRAWN BY: BP SHEET: 1 OF 1	CITY OF LAS VEGAS STANDARD DRAWING DOWNTOWN STEEL BENCH

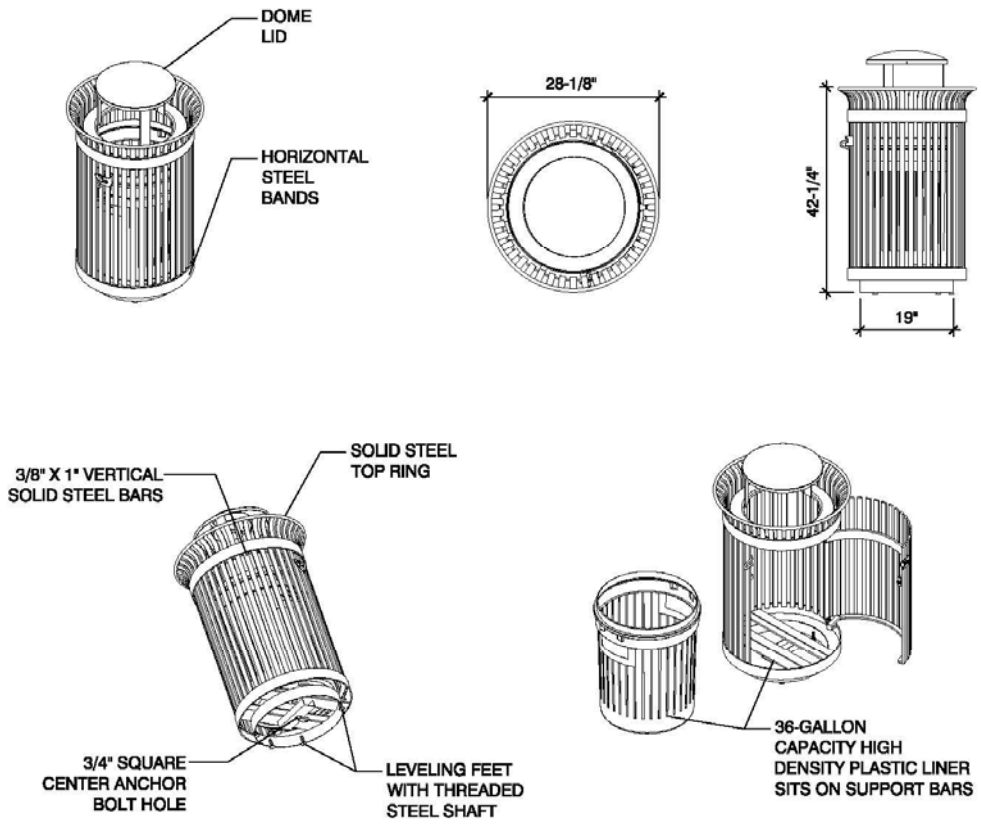

NOTES:

1. ALL FABRICATED METAL COMPONENTS SHALL BE STEEL SHOTBLASTED, ETCHED, PHOSPHATIZED, PREHEATED, AND ELECTROSTATICALLY POWDER-COATED WITH T.G.I.C. POLYESTER POWDER COATINGS. PRODUCTS SHALL BE FULLY CLEANED AND PRETREATED, PREHEATED AND COATED WHILE HOT TO FILL CREVICES AND BUILD FILM COATING. COATED PARTS SHALL THEN BE FULLY CURED TO COATING MANUFACTURER'S SPECIFICATIONS. THE THICKNESS OF THE RESULTING FINISH AVERAGES 8-10 MILS.
2. OIL IMPREGNATED BRONZE BUSHINGS AND STAINLESS STEEL PIVOT PINS FOR DOOR MOVEMENT, STAINLESS STEEL KEYED LOCK ASSEMBLY.
3. PERMANENTLY AFFIX TO THE GROUND PER MANUFACTURER'S INSTRUCTIONS. CONSULT YOUR LOCAL CODES FOR REGULATIONS.
4. PROVIDE PLASTIC INNER LINER MANUFACTURED BY TRASH RECEPTACLE MANUFACTURER.
5. CONTRACTOR SHALL PROVIDE ANCHOR BOLT.

N.T.S.

DEPARTMENT OF PUBLIC WORKS CAPITAL PROJECT MANAGEMENT DATE: DEC 2014 DRAWN BY: BP SHEET: 1 OF 1	**CITY OF LAS VEGAS** **STANDARD DRAWING** **DOWNTOWN** **STEEL TRASH RECEPTACLE**

F:\PW_ENG_DESIGN\DESIGN\DESIGN\CENTENNIAL STANDARDS\DWG\FOR GINA\DOWNTOWN_STEEL_BENCH.DWG

12/16/14

END OF SECTION 699

32 80 00 Irrigation

Irrigation. Design irrigation systems, drainage, and turf layouts to prevent water from:
1. Staining, spotting, or otherwise creating a noticeable pattern on adjacent materials.
2. Causing deterioration of adjacent surfaces.
3. Draining through or over surfaces including all sporting and play activity surfaces.

Irrigation Period. Provide sufficient capacity and pressure to irrigate all turf areas during a 6-hour water window. (Drip irrigation may extend beyond this period if necessary)

Irrigation Water Audit. Include a landscape audit in the specifications if the design contains more than 1,000 square feet of turf. Include in the Construction Documents a requirement that the audit be conducted in the presence of the Owner's parks representative and approved by the Owner prior to the installation of any turf.

> All overhead-irrigated landscape areas shall have a Landscape Irrigation Audit performed by a Certified Landscape Irrigation Auditor, certified and in good standing with the Irrigation Association (IA). The auditor shall be independent of the property owner and all contractors associated with the project. The audits will be conducted in accordance with the current edition of the IA's Landscape Irrigation Auditor's handbook. The minimum efficiency requirements to meet in the audit are 65% distribution uniformity for all fixed spray systems and 70% distribution uniformity for all rotary systems. The results of the audit shall be provided to the Owner in a report acceptable to the Owner and shall be signed by the Auditor. The report shall include controller number and location, station numbers, station locations, sprinkler head locations and distance between sprinkler heads, pressure reading per station, catch device readings and locations, distribution uniformity for individual stations, precipitation rates per station, and a 12 month irrigation schedule (runtimes per cycle, cycles per day, and days per week for each station). Compliance with this provision is required before the Owner will issue Final Payment to the Contractor.

Rain Bird Rewards Program. Insert the following language into the irrigation specification:
The City of Las Vegas currently participates in the Maxicom Dollars Program. Under this rewards program, the City receives Maxicom Dollars for all Rain Bird products/components purchased for installation on City facilities, streetscapes and parks by its contractors/subcontractors. All invoices showing proof of purchase of Rain Bird products/components must be submitted to by the Contractor or landscape subcontractor to an Authorized Rain Bird Distributor (Horizon Distributors, 4224 Wynn Rd., 362-4224, formerly Turf Equipment Supply Company) on behalf of the City for acceptance of rewards. Purchases must be submitted within the same calendar year that the products listed are purchased. The Contractor or landscape subcontractor must submit a written receipt of confirmation from distributor that the guidelines for the program were followed and credits for rewards were issued to the City of Las Vegas, before the City will issue Final Payment to the Contractor. Failure of the Contractor to comply with this program will result in a reduction in the Contract Sum due the Contractor equal to 5% of value of all Rain Bird products used on the Project.

Point of Connection. Size of Service shall vary based upon the system requirements and demands. It is highly recommended that the size of the meter and mainline be sized adequately to run multiple valves concurrently. (See Irrigation Period Above) Refer to the Las Vegas Valley Water District's Uniform Design Standards for Water Distribution System Plate Numbers for installation. Review each site individually for adherence to a six-hour water window and future expansion.

RPPA/Backflow Preventor. Size of Reduced Pressure Principle Assembly/Backflow Preventor shall vary based upon the system requirements and demands. It is highly recommended that the RPPA/Backflow Preventor be sized adequately to run multiple valves concurrently. (See Irrigation Period Above) Refer to

the Las Vegas Valley Water District's Uniform Design Standards for Water Distribution System Plate Numbers for installation. Install all Reduced Pressure Principle Assembly/Backflow Preventor's upstream of the pump station.

In addition to the RPPAs required at the water meter connection locations, install on-site RPPAs upstream of any irrigation pumps to isolate the irrigation system from on-site potable water systems including water features, splash pads, pools, drinking fountains, and buildings. Do not use pressure vacuum breakers, double check valve assemblies or other less stringent methods of isolation for this purpose even if allowed by code. Double check vale assemblies are acceptable for hose connections to the potable water system.

If one water meter and RPPA is used for both irrigation and potable systems, it must be "upsized" to compensate for the two RPPAs that would otherwise be required.

Master Valve. Do not install master valves for parks.

Flow Sensor. Data Industrial IR-220B flow sensor, Smith-Blair model 315 service saddle (or approved equal) with 2" NPT tap for pipe connection. Install flow sensor in concrete valve box with metal lid. Flow sensor shall be installed in a straight run section of pipe, with 10 times pipe diameter upstream and 5 times pipe diameter downstream of the flow meter to achieve proper flow regime. Wire to output decoder installed in CCU per manufacturer's recommendations. Pump station to have GMP display built in.

Sensor Cable. Belden Model 9883, as recommended by the flow sensor manufacturer from the control system pulsed decoder to the flow senor.

Decoder. Data Industrial Model 600-15 Pulse Output transmitter and Rain Bird Pulse Decoder. Install per manufacturer's requirements.

Booster Pump. Link to typical setup.

General Note. Provide adequate clearance for Owner's personnel to perform required maintenance.

General Requirements. Prefabricated pumping station, completely piped, wired, hydraulically and electrically tested on a structural steel skid before shipment to the job site. All components of the pumping system shall be designed to function in an outdoor environment exposed to all the elements. Furnish protective enclosure and cover as required for proper operation of the system. Pump station shall include skid assembly to support all components as the installed mounting base. Base shall be of sufficient size and strength to resist twisting and bending from hydraulic force and support the full weight of the pump and motor. Pump station manufacturer shall provide a factory-trained technician to supervise the installation of the pump station, pumps, and motors. Provide a minimum of one-day of training for Owner's staff in the operation, maintenance and programming of the system. Pump station components shall be supplied by and be the responsibility of one manufacturer, even though some components made are manufactured by others. Provide alternating starts for systems with two or more pump motors.

PSI shall be regulated by the use of variable frequency drives (VFD) or full size pressure reducing/sustaining valves (PRV, Clay or Bermad are acceptable.

Variable Frequency Drives. VFDs should be considered for pumps that are both:

- Used more than 1,000 hours per year, and
- 5 Horsepower or larger.
- Rated to 50° C
- Furnish a variable frequency drive that is IGBT based with selectable carrier frequency up to 15kHz. The VFD shall include terminals for incoming power, motor output power, and control terminals.

- The VFD shall generate a sine-coded, variable voltage / frequency, three phase output for optimum speed control. The VFD shall incorporate power loss ride-through for a minimum of two seconds. VFD protective features shall include current limit, short circuit protection, electronic motor overload protection, and ground fault protection.
- The VFD shall be protected on the primary side by fuses of the appropriate amperage.

  VFDs may be used for smaller less used pumps if the designer can demonstrate to the city that the advantages of a VFD for the application (power savings, soft starts and stops, future flow changes, single phase power use) outweighs the added cost. The designer is responsible to calculate that the life-cycle cost of the VFD is less than a PRV for the application.

  Pump stations with less than 60 psi N.P.S. shall have secondary means of pressure regulation when primary means are VFD. If over 60 psi, a full main size bypass is required.

Select VFD pumps and motors that require:

-
- Motor lead lengths within the manufacturer's recommendation (critical for smaller motors).
- A motor that is specifically designed for VFD applications (voltage spike insulation). Avoid 460V standard motors especially under 10 HP (230V standard motors may be acceptable).
- NEMA MG-1-1993, Part 31.40.4.2 (peak voltage of 1600 volts and a minimal rise time of 0.1 microseconds for motors rated less than 600 volts) when utilizing Insulated Gate Bipolar Transistors (IGBTs).

Pump Walled Enclosures. To be avoided, see Section 01 00 30 Park Design.

Acceptable Pump Manufacturers

Watertronics, 525 E Industrial Drive, Hartland, Wisconsin, 53029, 262-367-5000

Xylem Flowtronex Pumping Systems, 10661 Newkirk Street, Dallas, Texas 75220, 469-221-1200

Or Owner's approved equal

Pumps. Pumps shall be electric motor driven, close coupled, horizontal centrifugal with a self-adjusting type mechanical shaft seal. Pump and motor shall be constructed so that the motor and entire rotating element can be removed from the casing without disturbing the piping. All pump flanges shall have 150 PSI rating. Pump casing shall be constructed from cast or ductile iron. The impeller shall be enclosed, single piece bronze casting, completely machined on all outside surfaces, and statically balanced at the time of pump assembly. The impeller shall be keyed to the shaft and securely fastened. Bearings shall be roller or ball type of sufficient size to withstand the radial and axial thrust loads incurred during service. Shaft shall be stress-proof steel accurately machined and polished to transmit full fiver output. Shafts shall be protected by a renewable shaft sleeve. The coupling shall be designed to transmit full horsepower and torque load. Pump skid/base shall be of sufficient size and strength to resist twisting and bending from hydraulic forces and support the full weight of pumps and motors. Manufacturer shall provide and furnish performance data for the pumps.

Motors. Pump motors shall be squirrel cage induction horizontal solid shaft type. The temperature rise of the motor shall be to NEMA standard MG-1.12.42 for class B or class F insulation. Motors shall be inverter duty rated for continuous operation with a variable frequency drive controller. Furnish motors wired shall be capable of full voltage as required by local regulations. Motors shall be of proper size to drive the pump at any point on its operation curve without exceeding motor horsepower rating. Motors shall be manufactured under NEMA standards, or an approved equal.

Piping. Pump piping shall conform to ASTM specifications A53 for Grade B welded or seamless pipe. All piping shall be Schedule 40. All welding flanges shall be forged steel with slip-on or welding neck type. All welding fittings shall be seamless, conforming to ASTM specification A234, with pressure rating not less than 150 PSI. All piping shall include vitaloc and ductile iron flange piping. Intake Piping: Furnish intake lines for all pumps constructed and fabricated from Schedule 40 carbon steel pipe, and equipped with isolation valves at each pump.

Dogleg Piping: Coat interior of all pump station dogleg drop piping using Scotch Kote 134 or equal fusion bonded epoxy coating prior to shipment of the skid. Apply coal tar epoxy coating and install polyethylene encasement (polywrap) on all steel piping below grade.

Electronic Ball Valves. Pump station manufacturer shall provide a simple switch by-pass back-up mode for constant pressure regulation in the event of VFD failure. The back-up mode shall automatically function on the fly during an event of a VFD failure, without loss of irrigation. The VFD back–up mode must provide constant pressure at variable flow without causing line surge. Utilizing the pressure relief valve is not an acceptable automatic back up mode due to its inability to provide surge free constant pressure regulation at variable flow demand. The automatic VFD by-pass mode shall be either controlled hydraulically through a pressure-regulating valve per pump or EBV (electronic butterfly valve(s).

The pump station discharge pressure shall be regulated to provide surge-free constant pressure as programmed via the control panel operator interface. Discharge pressure shall be regulated by an Electronic Butterfly Valve, consisting of the following:

a. Gradual entry of water from the EBV pump into the discharge manifold to allow for complete purging of pump column air and elimination of surges.

b. Maintain programmed downstream pressure regardless of discharge flow.

c. Up to six, user adjustable PID control settings to ensure accurate pressure regulation at all flows, programmed pressure, or connected pump combination.

d. Adjustable pressure ramp-up and ramp-down to assure surge free pressure regulation.

e. After a drop in pressure, gradually increase system pressure over a user adjustable period of time to eliminate surging.

f. Rate of change of pressure control to anticipate and eliminate rapid pressure changes caused by changing system demand.

Adjustment of regulated downstream pressure shall be accomplished though the control panel operator interface. Individual pressure regulating valves shall be butterfly type with electric motor gear actuation. The maximum allowable pressure drop across the butterfly valve at full pump capacity shall not exceed one PSI. The Butterfly Valve shall be rated for not less than 285 PSI.

Drain Valves. Drain valves shall be provided at all low points in the system. Drain relief valves shall be piped to the outside of the pump enclosure, so that no water drains on the deck floor/skid plate.

Check Valves. Pump check valves shall be silent operating, non-slam type, cast iron bodied with bronze and stainless steel trim. Sealing surfaces shall utilize resilient Buna-N rubber. The valve design shall incorporate a center guided, spring loaded poppet, guided at opposite ends and having a short linear stroke that generates a flow area equal to the pipe diameter. Valves shall be sized to permit full pump capacity to discharge through them without exceeding a pressure drop of 2.5 PSI. Furnish check valves on the discharge of each pump.

Isolation Valves. Valves shall be butterfly type with the position lever or gear hand wheels and rated at 200 PSI working pressure. Trim shall include stainless steel stem, bronze streamlined disc, and full faces resilient seat. Isolation valves shall be installed on each pump inlet and outlet and on the discharge manifold.

Pump Bypass. Furnish pump bypass piping to operate the system for quick coupler requirements or in the event of power failure. Bypass shall be sized to full main line diameter with positive closing gate valve accessibility.

Gauges. Provide pressure gauges at appropriate location to read inlet pressure and discharge manifold pressure. Gauges shall be liquid filled, at least 2.5” in diameter, constructed with a stainless steel case, brass or bronze internals, and are vibration/pulsation dampened. Furnish ball valves installed below each gauge to provide total isolation of pressure gauges.

Electrical Enclosures. The electrical controls shall be mounted in a self contained NEMA 4 enclosure fabricated from not less than 12 gauge steel. Door gasket seals shall be neoprene sponge, sufficient to protect interior components from weather and dust. Door panels shall be constructed from 12-gauge steel with integral locking screws and latches. Operating handle for power disconnect shall be provided on the front of the panel. All external-operating devices shall be dust and weatherproof. All internal components of the enclosure shall be mounted on removable back panels. Mounting screws for components shall not be tapped in the panel enclosure. All internal wiring within, and interconnecting between, the panels shall be complete and no field wiring within the panels shall be required. Wiring troughs and cables raceways shall be self-contained within the enclosure and no external cable trays or wiring troughs are permitted. No pressure gauges, pressure switches, water activated devices, or water lines of any sort shall be installed in any electrical control panel.

Pump Motor Starters, Disconnect and Electrical Switch Gear. Pump motor starters shall be contained within a single NEMA 12 enclosure with a single access door and main disconnect. Each starter shall be protected on each power leg by a time delay fuse of the appropriate amperage. Motor starter coils shall be 240-460 volt operated. Overload relays shall be ambient-compensating type installed on each power leg and shall be set to trip at 105% of motor full-load current rating.

Master Control and Display Panel. Master control and display panel shall be NEMA 4 enclosure separate from the high voltage control panel and fabricated from not less than 12 gauge steel and equipped with a gasketed enclosure door. The incoming power shall be isolated by means of a circuit breaker or fused disconnect. The controller shall receive inputs from a flow sensor and pressure transducer and the 24 volt pump station relay located on the discharge manifold. Pump starting circuits, time delay circuits, stations safety shutdown circuits and any optional equipment control circuits shall have an operating voltage not exceeding 120 volts. All time delay control relays shall be plug-in type for easy replacement. The control panel shall be equipped with the following switches and displays: Manual on/off auto selector switches with green and red indicator lamps, individual pump elapsed time hour meters, digital LED discharge pressure display. Data flow industrial controller shall provide GPM information and Low/No flow emergency shut down.

Skid Wiring. Wiring from control panels to motors shall be in liquid-tight conduit with copper conductor rated not less than 600 volts AC and of proper size to carry the full load amperage of the motors without exceeding 70% capacity of the conductor. A grounding cable shall be included in the liquid-tight conduit. There shall be no splices between the motor starters and the motor connection boxes. Provide multi-conductor shielded cable suitable for Class II low voltage controls for wiring to flow sensors, and pressure transducers. Wiring should be rated for direct burial.
All wiring shall conform to the National Electrical Code Standards. Flexible conduit sections shall be under 5' in length to meet code. All conduit to devices shall be attached securely to avoid trip hazards.

Lighting Arrestor. Main power supply feeding the pumping station shall be equipped with a 3 phase secondary lighting arrestor having a breakdown current rating of not less than 60,000 amps at 14,000 volts discharge. Power supplies, 300 volts and less, shall use 300 volt rated arrestor with 800-volt spark-over voltage. Power supplies 301-600 volts shall use 600 volt rated arrestors with a 1,000-volt spark-over voltage.

VFD Cooling fan. Sized to cool the VFD to a minimum of 50C.

Heater. 3Kw skid mounted thermostatically controlled. Steel housing, phased wiring to match pump drive, meets all UL, NEC and OSHA requirements.

Misc. Electrical Components. A three-pole main station disconnect shall be mounted in a separate NEMA 12 enclosure to completely isolate the electrical system from incoming power. The disconnect shall conform to the requirements of the NEC and applicable local codes. The disconnect shall have an operating handle on the front of the panel. Single-pole secondary distribution fuses with appropriate ratings shall supply power to each pump starter coil circuit, the control system, and to other circuits as specified. Each pump motor starter shall be equipped with an elapse time meter reading up to 999.9 hours in tenths of hours. The meter shall be installed in the electrical control cabinet. Corrosion inhibiting modules shall be installed in all electrical enclosures in accordance with the manufacturer's recommendations. The station shall be equipped with the following alarms: Low voltage safety shutdown, low discharge pressure safety shutdown, high discharge pressure safety shutdown, high temperature safety shutdown, starter failure cutout and VFD fault and bypass. Provide three phase monitors.

Standards. All wiring shall conform to the National Electrical Code Standards. Flexible conduit sections shall be less than 5' in length to meet code. All conduit devices shall be attached securely to avoid trip hazards. All controls and electrical equipment shall be thoroughly inspected and tested before shipment.

Pressure Transducer. Provide a solid-state pressure transducer to provide a noise free, linear output proportional to discharge pressure. Transducer shall be solid-state, strain gauge type with integral voltage regulating and output accuracy not less than .25%. Transducer shall be constructed of stainless steel and rated for the maximum pump station discharge pressure.

Flow Sensor. The pump station discharge manifold shall incorporate an insertion type, pulse frequency output flow sensor for continuous output to the pump station controls. Flow sensor output pulse shall be conditioned and fed directly to the PLC interrupt input for conversion and display in gallons per minute. For accuracy and security considerations, conversion to an analog signal prior to PLC input shall not be accepted. Flow sensor accuracy shall be no less than 2% for flow velocities ranging from 1-30 feet per second. Provide an optical isolator board, Rain Bird decoder, and two terminal connections for flow sensor reading by the irrigation controller.

Painting. Paint of the entire pump station shall consist of a multi-step coating system that includes metal preparation, rust inhibitive prime coat, and a two part polyurethane finish having a total dry film thickness of not les than 4 mils. Paint with manufacturer's standard colors. All electrical enclosures, tanks and accessory panels shall be painted to a minimum thickness of 3 mils and baked at 160-10 F. No exposed aluminum will be permitted.

Operation. Operation:
The pump station shall have two operating points.
When water is being supplied to the irrigation system from the lake and vertical turbine pumping system, the booster pumping system will be programmed not to operate.
When the municipal (potable) water service is connected to the booster pump and supplying water directly to the irrigation system the booster pump operation point shall be as shown on the drawings.
The pump station controls shall provide automatic pressure regulation based on variable flow. The controls shall be capable of changing the regulated downstream pressure while in operation based on flow or a discrete input signal.
The pump system controls shall be capable of up to six user adjustable pressure regulation set points based on flow or one additional set point based on a discrete input.
In addition to adjustment of downstream pressure, the controls shall be capable of up to six pressure regulation algorithms to insure accurate pressure regulation regardless of the regulated pressure or discharge flow.

Valve Locations. Locate all valves outside of asphalt and concrete surfaces.

Gate/Isolation Valves. Provide gate/isolation valves so that open space areas/fields can be shut down without interrupting service to remaining areas.

- For gate/isolation valve 2” and greater, install resilient wedge model gate valve conforming to AWWA C-509 standards. Valve shall be equipped with square operating nut. Nominal size of gate/isolation valve shall match mainline size.
- For gate/isolation valve on lines less than 2”, install threaded bronze gate/isolation valve with solid wedge, non-rising stem, Nibco T113 or approved equal. Nominal size of gate/isolation valve shall match mainline size.
- For valves located more than 2 feet below grade, install no valves less than 2” in size regardless of pipe size, with square operating nut.
- Install gate/isolation valve above grade in pump enclosure or bury below grade in round concrete valve box with metal lid. 6 Inch PVC class 200 sleeve, length as required, shall be installed from the gate/isolation valve (mainline) up to within 2 inches of the valve box lid per provided detail.

Quick Coupler Valves. Rain Bird 44 NP, 1”, 30 GPM. Contractor shall provide 44K, 1”, Corresponding Valve Key and SH-1, 1”, Hose Swivel. Provide one set of Key and Hose Swivel to the Owner’s maintenance staff for each five quick coupler installed. Install quick coupler valve, including filling the valve box with concrete, per provided detail.

Sports Fields Quick Couplers. Connect quick couplers at sports fields to not less than 1-1/2” PVC line size and at least one isolation valve per sports field quick coupler feed.

Ball/Flush Valve. Schedule 80 PVC Ball Valve with ABS handle shall be installed at all Remote Control/Drip Valve Assembly locations and in all piping under pressure (mainline). Schedule 40 PVC Ball Valve with ABS handle shall be installed at all flush valve locations (lateral/drip).

Automatic Control Valve. Rain Bird Electric Remote-Control Valve PEB-Series, 100 for 1” line and 200 for 2” line. Install below grade in pre-cast concrete valve box with metal lid. Valve shall be numbered with Christy identification tag (T. Christy Enterprises, Inc., Anaheim, CA). Install automatic control valve per provided detail including Schedule 80 PVC ball valve and fittings.

Automatic Control Valve with Drip Assembly. Rain Bird Electric Remote-Control Valve 100-PEB Series, Rain Bird Wye Filter RBY-100-200MX, Rain Bird Pressure Regulator PSI-M30X-100. Install automatic control valve with drip assembly below grade in pre-cast concrete jumbo valve box (25” x 15” minimum size) with metal lid. Install automatic control valve with drip assembly per provided detail including Schedule 80 PVC ball valve and fittings.

Concrete Valve Boxes. Pre-cast concrete rectangular valve box with metal lids, size adequately to house valve, plus components. For control valve with drip assembly, jumbo valve box with metal lid is required. For quick coupler or drip lateral flush valves, a 10" round concrete valve box with a round metal lid is required. Turf and drip valve boxes shall be installed level, lined-up, flush with grade in planting areas where possible. Valve boxes shall not be placed in sports playing fields.

The designer is to verify with the Owner whether locks are to be specified on valve boxes when located in the right-of-way. Locks on valve boxes are not required in parks.

Site Satellite Controller. Rain Bird ESP-Site Satellite Controller. This controller combines all features of the ESP-Sat Controller and the Cluster Control Unit (CCU) into one. The control unit shall be stainless steel, pedestal mount. This control unit shall be used on small sites, when one satellite/CCU is required. Communication from the central computer shall be hardwire when possible. Contractor shall install 1" conduit with pull-string from telephone terminal board (TTB) location to the control unit. Electrical requirements for operation are 120 VAC with toggle disconnect/switch. Provide 1" conduit with pull-string from the electrical service panel to the control unit. Provide 1" conduit with pull-string from the site satellites to the pump. Label each station on the controller lid with waterproof card and provide waterproof reduced color-coded site plan complete with station identification.

Cluster Control Unit (CCU). Rain Bird Cluster Control Unit (CCU). The CCU is the interface between the central control and the field satellites for the Maxicom^2 system. The unit shall be stainless steel, pedestal mount, located adjacent too, and in-line with the field satellites when grouped together. Size shall vary based upon the number of field satellites required for the project. Contractor shall install 1" conduit with communication wire from telephone terminal board (TTB) location to the CCU. Communication from the central computer shall be hardwired rather than cell phone whenever possible. Install 1" conduit with maxi wire between the CCU and the field satellites. Electrical requirements for operation are 120 VAC with toggle disconnect/switch. Provide 1" conduit with pull string from the electrical service panel to the CCU and 1" conduit with pull string from the CCU to the pump. Provide waterproof reduced color-coded site plan complete with controller location.

Field Satellites. Rain Bird ESP-SAT Field Satellite Controller. The field satellites interface with the CCU. The satellite controller shall be stainless steel, pedestal mount, located adjacent too, and in-line with other satellites and CCU when grouped together. Station number requirements, and the number of satellites shall vary based upon project size and valve quantities. Contractor shall install 1" conduit with maxi wire between the field satellites and CCU. Electrical requirements for operation are 120 VAC with toggle disconnect/switch. Provide 1" conduit with pull-string from the electrical service panel to the field satellites. Provide 1" conduit with pull-string from the field satellites to the pump. Label each station on the controller lid with waterproof card and provide waterproof reduced color-coded site plan complete with station identification.

Hand-Held Remote Control Unit. Hand-held Remote Control System shall be TRC Commander, as manufactured by Remote Control Technologies, 18342 Redmond Way, Redmond, WA 98052, 800-275-8558. The Hand-held Remote Control Features shall include the following: Automatic resetting fuse on receiver, multiple station capabilities, operates on 24 VAC-solenoids, master valve or pump disable, programmable time duration, receiver built-in safety default, direct controller interface ready. Included with the system shall be the carrying case, transmitter, receiver-32 stations, 32 station PCC, two antennas, one 9-volt alkaline battery and accessory pack. Mount antenna to provide communication with all areas of the project. Provide one remote per each 20 acres of project site area.

Control Wire. UF-UL American Wire Gauge 12/14 Solid Copper Direct Burial Wire. Follow mainline piping where possible. Wire color shall be continuous over entire length. All splicing of wire shall occur within the valve box at valve locations using 3M-DBY/DBR wire connectors. Intermediate splicing may occur, but the splice shall be placed in a valve box. Use white wire for common ground wire. Use easily distinguished colors for control wire. Install 3 spare wires looped through each valve location. If multiple

controllers are required for the project, the wire colors shall be the following:

Controller "A" Control wire: Red	Common wire: White with red stripe
Controller "B" Control wire: Brown	Common wire: White with brown stripe
Controller "C" Control wire: Blue	Common wire: White with blue stripe
Controller "D" Control wire: Green	Common wire: White with green stripe

Communication Wire (maxi wire). Anixter F-03P19BPD Direct Burial Wire, or approved equal, between the Cluster Control Units and the Field Satellites. All splicing of communication wire shall occur within the valve box at valve locations using 3M-DBY wire connectors or DBR. Intermediate splicing may occur, but the splice shall be placed in a valve box.

Pipe and Valve Over Sizing. Designer shall design the irrigation system to utilize no more than 70 percent of the maximum design capacity of the pipe and valves in all lines (oversize the pipe). Provide no PVC pipe less than 1 inch in size. Indicate, at each valve location on the drawings, both the design flow and maximum capacity in GPM.

Mainline Pipe. Provide minimum cover of 24 inches over pipe to finish grade.

For pipe sizes over 3 inches, provide Class 200 PVC, SDR-21, rated at 200 PSI, conforming to the dimensions and tolerances established by ASTM D2241, with an integral belled end suitable for solvent welding.

For line sizes up to 3 inches, provide Schedule 40 PVC conforming to the dimensions and tolerances established by ASTM Standard D 1785, with an integral belled end suitable for solvent welding.

Pipe Saddles. Provide ductile iron saddle clamps for lateral connections to pipes 4 inch and larger.

Thrust Blocks. Thrust blocks shall be required on pipe greater than or equal to 3-inch diameter or for all rubber gasketed pipe. Thrust blocks shall be 3000 PSI cast-in-place concrete bearing against undisturbed soil. Wrap fitting with 2 mil. plastic to protect bolts, joints, and fittings from concrete. No. 4 rebar with mastic coating shall be installed where pipe shall be anchored to the thrust blocks, and at all location where mainline pipe changes directions. Install thrust blocks so the horizontal and vertical dimensions of the thrust blocks are approximately equal. Size thrust blocks per provided detail to be included in the construction drawings by the designer.

Lateral Pipe. Schedule 40 PVC conforming to the dimensions and tolerances established by ASTM Standard D1785, with an integral belled end suitable for solvent welding. (Minimum cover- 12" over pipe to finish grade)

Fittings/Nipple. Schedule 80 PVC fittings/nipples shall be installed unless otherwise noted. Lateral pipe may use schedule 40 PVC fittings unless otherwise noted.

Drip Lateral Pipe/PVC Hose. Schedule 40 PVC conforming to the dimensions and tolerances established by ASTM Standard D 1785, with an integral belled end suitable for solvent welding. PVC hose shall be ½" IPS Excalibur (no substitutions). Maximum length of the PVC hose shall be 48". (Minimum cover- 12" over pipe to finish grade.)

Valve Box Pipe. Provide a minimum of 24" of straight pipe outside of valve boxes for all pipe entering and exiting valve boxes, with no changes in size pipe size from the valve to 24" outside of the box.

Sleeving. Schedule 40 PVC conforming to the dimensions and tolerances established by ASTM Standard D 1785, with an integral belled end suitable for solvent welding. Sleeving diameter shall be a minimum of twice that of the pipe or wiring bundle passing through the sleeve, or larger is noted otherwise. (Minimum cover-24" over pipe to finish grade.)

Backfill. Prior to backfill, all mainline and lateral pipe shall be reviewed by the Owner's representative and corrections made by the Contractor. All mainline shall be bedded with masonry sand 4" below and 4" above the pipe. All pipe trench backfill shall be 1 inch minus, clean, native material.

Irrigation Heads.

Spray Heads. Rain Bird 1806 Heads with plastic matched precipitation nozzles. Heads shall be installed plumb with swing joints. Install using side inlet with head flush with grade. (Note: 1806 SAM (seal-a-matic) heads shall be installed when there is severe elevation change across the site. SAM heads require installation through the bottom inlet.)

Impact Rotor Heads. Rain Bird 41-51 Series brass impact rotors with high-impact plastic cases and color-coded plastic nozzles for heavy-traffic large turf applications. Heads shall be installed plumb with swing joints.

Gear Rotor Heads. Rain Bird 5500, 7005 and 8005 gear driven rotors with integral rubber cover and Rain Curtain nozzles or Hunter I-20's and I-25's gear driven rotors with integral rubber cover and plastic color-coded nozzles. Head shall be installed plumb with swing joints.

Drip Emitters. Bowsmith drip pressure compensation 1 or 2 GPH emitters. Install emitters on the uphill side of the root ball at slope locations. Equally space the required number of emitters around the perimeter of the plant at the edge of the root ball.

Emitters shall be installed on black male ½" threaded adaptors, which shall be solvent welded to the PVC hose. PVC hose shall be ½" IPS Excalibur (no substitutions). Maximum length of the PVC hose shall be 48".

Drip Line. Netafim (no substitutions) may be used in roadway medians for all irrigation and in parks for trees only. Drip line shall be laid in equal rows, not rings, on-surface and covered with two inches of decomposed granite, do not bury. Do not use push-plug connectors at the lateral connection.
Netafim USA, 5470 East Home Ave., Fresno, CA 93727, 559.453.6800.

Swing Joint. Swing joints shall be schedule 80 PVC nipples and Marlex street ELLs per provided detail. (linked detail scan)

Mainline/Hydrostatic Test. Upon completion of the irrigation main, and prior to the installation of any automatic control valves, test the entire main or portions of the main for proper operation. Flush all air from the mains being tested and check all components for proper operation. After completion of the flushing operation, test the mainline with 150-PSI hydrostatic pressure for a minimum of 2 hours. After the pressure within the mains has stabilized, no pressure loss will be allowed for the test period. Remove and/or replace any item or component of the system which does not comply with the test, and test the entire system again until satisfactory test result are obtained. Contractor shall request observation by the Owner's representative 48 hours prior to testing. The test shall be made in the presence of the Owner's representative, signed and dated.

Coverage Observation. Upon completion of the irrigation system and with the Owner's representative present, Contractor shall perform a coverage test on all components of the system to verify 100% coverage. The Contractor shall perform all work and furnish all materials necessary to correct any inadequacies and adjust heads/emitters as required.

Baseball/Softball- Special Irrigation Requirements (both turf and skinned infields).

Provide quick couplers and pop-up heads per the provided detail. Click for link to details.

Football/Soccer- Special Irrigation Requirements. None.

Warranty. Provide one-year minimum warranty from commencement of substantial completion on all irrigation material, equipment and workmanship against defects and failure. Fill and repair all depressions and settling of irrigation trenches and excavations. Repair damage to all premises/facilities caused by defective items. Repairs shall be made with three days of notification from the Owner.

Extra Materials. Provide the following spare materials to the Owner to match those used on the Project:

- 1 Field Satellite Controller if any used.
- 5 Irrigation Heads of each type and model used.
- 5 Quick Coupler Valves if any used. Also provide keys and hose swivels as previously stated in the quick coupler section.
- 5 Automatic Control Valves, Remote-Control Valves, Wye Filters, and Pressure Regulators if any used.
- 5 PVC Ball/Flush Valves of each type and size used.

This page intentionally left blank.

ATTACHMENT 26-1
AMENDMENTS TO THE STANDARD SPECIFICATIONS

This page intentionally left blank.

AMENDMENTS TO THE STANDARD SPECIFICATIONS

General

The 2014 edition of the Department's *Standard Specifications for Road and Bridge Construction* (Standard Specifications) is hereby amended with the additional provisions in this Attachment 26-1.

Amended Standard Specifications

The language in the following sections is hereby incorporated into the Department's Standard Specifications.

SECTION 212 – LANDSCAPE AND AESTHETICS

212.01.01 General. This work consists of painting new concrete surfaces.

212.03.12 Painting. Thirty days prior to beginning paint application, apply paint test sections on approved test panels. The Engineer may require different shades of the colors or variance of shades on the same test panel to make a selection. Prior to test paint application, blast and pressure wash the test panels as specified below. Perform additional surface preparation as recommended by the paint manufacturer. Allow the test panel to fully dry. Apply test paint in accordance with the manufacturer's recommendations using a manufacturer certified applicator. Demonstrate that the paint penetrates the surface and is immediately absorbed. Do not begin application of paints on the project until the paint colors have been approved and application methods demonstrate successful results.

Give notification not less than 72 hours prior to the commencement of application of paint.

Do not paint concrete surfaces until they have cured a minimum of 28 days. Schedule the paint application with earthwork and backfilling operations of any given wall to insure that the walls are treated to the minimum distance below finished grade.

Remove laitance, curing compounds, form release agents and other substances detrimental to the finish coating performance prior to painting with the following steps:

1. Hot water pressure blast.
2. Chemical wash with trisodium phosphate, copper sulfate, or any detergents specially formulated for removal of form release agents, curing compounds and all laitance involved with the construction procedure. Apply with vigorous scrubbing or an approved mechanical method.
3. Hot water pressure blast to remove cleaning agents and remaining laitance.
4. Perform field test as described below.

The above steps are based on early form removal and the necessity for the application of curing compounds. In areas where curing compound has not been applied, hot water pressure blasting accompanied with field testing may be all that is required for complete surface preparation.

Field testing will consist of applying water on a dried section of prepared concrete surface. If any water beading and/or differential absorption into the concrete surface is noted, then perform the above Steps 2 and 3.

Hot water pressure blasting and equipment shall consist of the following:

a) Provide equipment capable of producing between 2000 - 3000 psi when applied at a rate of 3-4 gpm. Vary the blasting pressure until laitance removal is observed. Do not operate pressure so high that etching of the concrete surface occurs. Maintain water temperature between 185 ºF and 200 ºF. Make any adjustments necessary to the satisfaction of the Engineer.

b) Use a fan nozzle that produces a 0 to 15 degree spray pattern.

c) The hot water pressure blasting removal pattern shall provide a clean concrete surface. Hold the nozzle perpendicular and 12-24 inches away from the concrete surface. Overlap each spray pass to obtain maximum removal of laitance. Spray patterns may be up and down or side to side. If the laitance is difficult to remove, both up and down and side to side may be necessary for complete surface preparation.

All surface preparation shall be performed to the satisfaction of the Engineer.

Apply the concrete paint according to the manufacturer's recommendations using a manufacturer certified applicator. Apply paint with the number of coats, and application rates, recommended by the manufacturer.

Apply paint when the ambient and surface temperature is 7 °C (45 °F) and rising. Do not apply paint when temperatures are above 35 °C (95 °F).

Do not apply paint when winds are 8 mph or greater or when there are dusty conditions. Do not apply paint during fog, mist, the relative humidity exceeds 85%, at temperatures less than 5 degrees above the dew point, or when precipitation is imminent.

Provide drop cloths or other forms of protection for surrounding surfaces of overspray and splashing. Protect traffic and pedestrians from overspray.

212.03.14 Aesthetic Patterning.

(a) General. Use prefabricated form liners to provide aesthetic patterning to formed concrete surfaces as shown on the plans.

Prior to fabrication, submit shop drawings for all form work incorporating form liners for approval. The shop drawings shall show the location of construction joints, use of special form liner materials, and type and location of form ties. Include a material list of all form liner types, showing location, including panel size, layout of each panel, form liner joints, seams, and method of attachment. Included in shop drawing and material list shall be any materials used to construct reveals, elevation/relief transitions, edges, and any required special graphic features.

(b) Materials. The form liner manufacturer shall have a minimum of five years experience in manufacturing form liners of equal complexity to this project. Submit proposed form liner material for approval. Provide a 36” x 36” sample of each proposed pattern/texture, including the reverse positive of each, indicating use, location, and attachment method. Include materials that will be used to produce reveals, chamfers, and transitions in relief elevations and textures. Provide evidence that materials have been used successfully on similar projects using construction photos, dates, and names. Submit a minimum of 3 photos demonstrating such patterning.

The form liners shall be able to withstand concrete pour pressure without deflection and distortion and be removable without causing concrete surface deterioration or weakness in the substrate.

Use release agents compatible with form liner surface finish and color system to be applied.

Wood forming or foam form inserts will be allowed.

(c) Installation. Upon approval of form liner materials and shop drawings, construct full size mockup panels using approved form lining materials. Construct panels to provide a sampling of all form liner material types and textures, construction joints, form liner seams, reveals, colors and portions of any special art features. The form liner used shall produce the same pattern that is intended for use on the finished structure and shall be incorporated into final work. The mockup test panels shall be un-reinforced, vertically cast, concrete constructed to determine the surface texture resulting by use of form liners. Panels to be oriented with the aesthetic patterns facing south. Remove unsatisfactory panels and replace with satisfactory panels. Dispose of test panels after completion of finished concrete wall or as directed. Do not begin construction until proposed materials and construction methods indicate satisfactory results.

Securely attach liner to forms per manufacturer’s recommendation. Coordinate wall ties with approved shop drawings.

Apply form release agent per manufacturer's recommendation.

Make free of build-up prior to each pour. Visually inspect each liner for blemishes and/or tears and repair per manufacturer's recommendation.

Form liner seam joints shall be finished and carefully blended into the final concrete surface. Finished texture and pattern shall be continuous without visual disruption.

SECTION 496 - POLYMER CONCRETE

DESCRIPTION

496.01.01 General. This work consists of preparing concrete surfaces and furnishing and placing polymer concrete consisting of a premixed composition of polyester resin binder and dry aggregate.

496.01.02 Submittals. Submit a list of at least 3 previous projects in which polymer concrete has been placed by the Contractor and satisfactory performance has been obtained. The previous projects must have been completed within the last 5 years and have been open to traffic for not less than 1 year. Include in the submittal, location of bridge (state, route, and bridge identifier), product name and manufacturer of each resin, approximate date of project opening to traffic, owner, and contact person with phone number.

MATERIALS

496.02.01 Polymer Concrete. Use a polymer concrete system listed in the QPL. Make no substitutions for the listed polymer concrete system components.

Give notification at least 20 days before placement of the polymer concrete so it can be determined if a sample of the polyester resin will be required.

Aggregate shall conform to one of the following gradation requirements:

	Percent Passing by Mass	
Sieve Size	**Gradation 1**	**Gradation 2**
12.5 mm (1/2 in.)	---	100
9.5 mm (3/8 in.)	100	83-100
4.75 mm (No. 4)	62-85	65-82
2.36 mm (No. 8)	45-67	45-64
1.18 mm (No. 16)	29-50	27-48
600 µm (No. 30)	16-36	12-30
300 µm (No. 50)	5-20	6-17
150 µm (No. 100)	0-7	0-7
75 µm (No. 200)	0-3	0-3

Aggregate retained on the 2.36 mm (No. 8) sieve shall have a maximum of 45 percent fractured faces as determined by Test Method No. Calif. 205. Aggregate passing the 2.36 mm (No. 8) sieve shall consist of natural sand only.

Aggregate absorption shall not exceed 1.0 percent as determined by Test Method No. Calif. 206 and 207.

The moisture content of the aggregate, as determined by Test Method No. Nev. T112 (Method A), shall not exceed 50 percent of the aggregate absorption capacity at the time of mixing with the resin.

The pre-bagged aggregate may be furnished in two or more sizes. The combined proportions of each size shall meet the above requirements.

The promoter/initiator system for the methacrylate resin shall consist of a metal drier and peroxide. If supplied separately from the resin, at no time shall the metal drier be mixed with or

allowed to contact the peroxide directly. Do not store the containers in a manner that will allow leakage or spillage from one material to contact the container or material of the other.

Accompany each shipment of high molecular weight methacrylate resin, polyester styrene resin, promoter and initiator with a Material Safety Data Sheet.

CONSTRUCTION

496.03.01 General. Before placing polymer concrete, furnish the following:

1. Skilled technical service relating to application of materials, including a representative present during the initial placement of polymer concrete.

2. Health and safety training for personnel who are to handle the materials. In addition, provide a soap and water wash station for the workers at the job site.

3. Submit proposed locations of the longitudinal and transverse joints for approval. Do not locate the longitudinal joints in wheel lines.

Mix one or more trial batches of polymer concrete for various percentages of resin binder as directed. The percentage of polyester resin binder to use will be determined from the trial batches.

The materials used in the trial batches shall be the same as those intended for use in the trial overlay. If at any time different materials are to be used, new trial batches will be required.

496.03.02 Trial Batches and Overlay. When the polymer concrete will be used for an overlay application, place one or more trial overlays on a previously constructed concrete base to demonstrate the effectiveness of the proposed mixing, placing, and finishing equipment. Each trial overlay shall be 3.6 meters (12 feet) wide, at least 1.8 meters (6 feet) long, and the same thickness as the overlay to be constructed.

Place trial batches under similar conditions anticipated to be encountered during placement of the permanent overlay.
Remove and dispose of all materials used in the trial batches and overlays, including the concrete base, according to Subsection 107.14.

496.03.03 Bridge Deck Preparation. After removal of any bituminous surfacing and before deck preparation, repair bridge decks as provided for in Subsection 502.03.15. After repairs are complete, scarify the bridge deck by shot blasting. Use of scabblers, milling machines, or sand blasting will be at the discretion of the Engineer. If shot blasting is utilized, use a 75-horsepower (hp) minimum self-propelled machine equipped with vacuum recovery.

The scarifying procedure shall produce a uniform rough texture, removing concrete and exposing the coarse aggregate to a depth not to exceed 6 millimeters (mm) (1/4 inch). The prepared surface shall be sound.

Adequately isolate expansion joints and weakened plane joints before overlaying, or saw them by approved methods within 4 hours after overlay placement. The exact time of sawing will be determined.

Immediately before applying the prime coat, sweep the surface clean with compressed air to remove accumulated dust and loose material.

496.03.04 Concrete Placement. Before applying the prime coat, the concrete area to receive the prime coat shall be dry when tested according to ASTM D4263. The concrete surface temperature shall be between 10 °C (50 °F) and 38 °C (100 °F) during application of the prime coat. Methods proposed to heat or cool the concrete surface shall be subject to approval.

Apply the prime coat to the concrete surface prior to placement of polymer concrete.

Apply the prime coat at an approximate rate of 0.40 L/m^2 (0.09 gal/yd^2). Flood concrete surfaces with the prime coat allowing penetration into the concrete and filling of all cracks. Redistribute the applied prime coat in cracks by squeegees or brooms. The quantity of initiated, promoted resin shall be no more than what is needed to apply a prime coat. A noticeable increase in viscosity prior to placement will be cause for rejection. If the primed surface becomes contaminated, or if there is a failure of the material, clean the contaminated or failed area by abrasive blasting and re-prime. Do not allow traffic on the primed surface.

The surface temperature of the concrete to receive polymer concrete shall be between 10 °C (50 °F) and 38 °C (100 °F).

Mix polymer concrete in mechanically operated mixers. The polyester resin binder in the polymer concrete shall be approximately 12 percent by mass of dry aggregate. The exact rate will be determined. Use a sufficient amount of initiator in the polymer concrete to produce set times between 30 and 120 minutes after placement. Determine set times according to Test Method No. Calif. 551. Accelerators or inhibitors may be required to achieve proper set times and shall be used as recommended by the resin supplier.

Initiate and thoroughly blend the polyester resin binder before introduction of aggregate to the binder. Mix the polymer concrete a minimum of 2 minutes before placing. If directed, reduce mixing time below 2 minutes, or take other corrective action to avoid entrapment of air in the mix.

Place and finish polymer concrete before gelling or within 15 minutes following addition of the initiator, whichever occurs first. Discard polymer concrete not placed within this time.

Use finishing equipment that strikes off the polymer concrete to the established grade, cross section, and nominal depth. Fit finishing equipment with vibrators or other means of consolidating the overlay material. Construct longitudinal joints parallel to the roadway alignment. Construct vertical joints perpendicular to the deck surface. Saw cut vertical joints not perpendicular to the deck surface.

Apply abrasive sand finish to polymer concrete surfaces which will not be covered with a plantmix bituminous overlay. The sand shall be commercial quality blast sand, conforming to the absorption capacity and moisture content requirements of polymer concrete aggregate specified herein. Provide sand such that 95 percent shall pass the 2.36 mm (No. 8) sieve, and 95 percent shall be retained on the 850 µm (No. 20) sieve. Apply the sand finish by mechanical means immediately after overlay strike-off. Broadcast sand uniformly onto the surface before gelling occurs at a minimum rate of 0.8 kg/m^2 (1.5 lb/yd^2).

Protect the finished polymer concrete overlay from moisture, equipment, and public traffic for not less than 4 hours after finishing.

Do not contaminate concrete surfaces during clean-up of tools and equipment. Do not dump or spill polymer concrete materials or cleaning solvents in areas that will cause environmental or fire hazards.

Provide the necessary equipment and supplies for conducting pull off tests on the completed polymer concrete overlay. Perform pull off tests according to ACI 503R - Appendix A of the ACI Manual of Concrete Practice. Pull off test shall exhibit cohesive failure within existing concrete. Pull off tests shall obtain a 1725 kPa (250 psi) minimum pull off. Perform tests at a frequency of one test per every 50 m^2 (60 yd^2) of deck surface. Prime and patch test holes with polymer concrete immediately after testing.

Where the polymer concrete is not to be covered with a plantmix overlay and will be the wearing surface, the finished surface shall be uniform, shall have a Skid Number (SN) of not less than 55, and shall conform to Subsection 502.03.16. Test the finished surface of the polymer concrete for the specified SN according to ASTM E274. Grind or groove, parallel to the centerline, any portions of surfaces that do not meet the above requirements according to Subsection 502.03.16 until the finished surface requirements are met.

Where the polymer concrete is to be covered by a plantmix bituminous overlay, the surface of the concrete shall not vary more than 7.5 mm (0.3 in.) from the lower edge of a 3.6 m (12 ft) straightedge laid in any direction. Remove all high areas in the hardened surface to within specified tolerances as indicated. Correct all high areas in the plantmix bituminous surface according to Subsection 402.03.05 and 403.03.04 to meet the aforementioned surface tolerances. Perform removal by abrasive means.

After any required grinding by abrasive means has been performed, the surface of the concrete shall not be smooth or polished but shall have a satisfactory surface texture. Produce ground areas of uniform texture and of neat and approximately rectangular patterns which extend laterally to the nearest lane line and longitudinally so that the grinding begins and ends at lines normal to the centerline.

SECTION 497 - THIN BONDED MULTILAYER OVERLAY

DESCRIPTION

497.01.01 General. This work consists of preparing concrete surfaces and furnishing and placing a thin bonded multilayer overlay consisting of multiple layers of a polymer resin binder and broadcast dry aggregate.

MATERIALS

497.02.01 General. Use one of the following thin bonded multi-layer resins with the aggregate combinations listed below:

Poly-Carb, Inc.
Product, Poly-carb Mark 163 Flexogrid
Mr. Ruolei Wang
33095 Bainbridge Rd.
Solon, Ohio 44139
Email: rwang2@dow.com
Phone: (800) 225-5649
Phone: (440) 914-3038

E-Bond Epoxies, Inc.
Product, E-Bond 526 (Bridge Bond 34 - private label version)
Mr. Steve Frank
3491 Old Cobble Court
San Diego, California 92111
Email: Stevepolymerdek@aol.com
Phone: (858) 571-5043
Phone: (858) 442-8185

Unitex By Dayton Superior
Product, Pro-Poxy Type III D.O.T.
Mr. David Minor
3101 Gardner Ave.
Kansas City, Missouri 64120
Email: davidminor@daytonsuperior.com
Phone: (800) 821-5846
Phone: (970) 286-9229

The combined aggregate shall consist of 50% calcined bauxite and 50% steel slag by mass.

The calcined bauxite aggregate shall be from one of the following distributors or an approved equal:

Newport Industries Ltd
Calcined Bauxite
Mr. Mark C. Isaacs
3rd Floor Merlin House
20 Belmont Terrace
Chiswick, London W4 5UG
Phone: (919) 522-8113

Great Lakes Minerals, LLC
Paul Ormond
1200 Port Road
Wurtland, Kentucky 41144
Email: paulormond@glmin.com
Phone: (606) 585-4327

The calcined bauxite aggregate shall conform to ASTM D5711-03 and not exceed 1.0%, and shall conform to the following gradation:

Sieve Size	Percent Passing by Mass
No. 4	100
No. 8	30-75
No. 16	0-5
No. 30	0-1
No. 200	0-0.2

The steel slag shall be from one of the following distributors or an approved equal:

Earthwork Solution LLC Mr. Patrick Malfitano 5595 East Bijou Street Colorado Springs, Colorado 80916 Email: Patrick@ewslag.com Phone: (719) 492-0706	Harsco Metals Norm Whinery PO Box 247 Armorel, AR 72310 Email: NWhinery@harsco.com Phone: (870) 763-6506	Schmidt Construction Tom Blair 51445 West Twelve Mile Road Wixom, Michigan 48393 Email: tblair@edwclevy.net Phone: (248) 675-0103

The steel slag shall conform to the same gradation specified above for calcined bauxite.

CONSTRUCTION

497.03.01 General. Before placing the overlay, have the resin supplier furnish the following:

1. A technical representative to provide on-site training to contractor personnel on equipment and procedures for preparing concrete surfaces and placing the thin bonded multilayer overlay. The technical representative shall be present for the initial application of the overlay. As directed, the technical representative shall also be present for subsequent applications of the overlay.

2. A letter from the resin manufacturer denoting the specific contractor personnel that the technical representative has provided job specific training to and is deemed qualified to supervise installation of the overlay.

3. Health and safety training for personnel who are to handle the materials.

Provide shielding or tenting to protect public traffic from bridge deck preparation and overlay placement operations. Protect existing expansion joints, relief joints, and adjacent surfaces.

497.03.02 Bridge Deck Preparation. After removal of any bituminous surfacing and prior to deck preparation, repair decks and approach slabs according to Subsection 502.03.15. After repairs are complete, scarify concrete surfaces by shot blasting using a 75 hp minimum self-propelled machine equipped with vacuum recovery. Do not use shot blasting equipment that causes ravels, aggregate fractures, spalls, or disturbance of joints. The scarifying procedure shall produce a uniform rough texture, removing concrete and exposing the coarse aggregate to a depth not to exceed 1/4 inch. The prepared surface shall be sound.

As necessary, use multiple passes of shot blasting equipment to completely remove pavement marking materials until they are no longer visible.

Complete the deck preparation by following all of the resin manufacturer's surface preparation recommendations.

Immediately prior to the first application of the overlay resin, clean prepared surfaces with oil-free compressed air or by air vacuuming. Do not permit public traffic or nonessential construction traffic on surfaces readied for overlay placement.

497.03.03 Overlay Placement. Follow all recommendations of the resin manufacturer for placement and curing of the thin bonded multilayer overlay system. Conform to the resin,

surface, and ambient temperature limitations indicated in the resin manufacturer's published product data sheets.

Submit for approval proposed methods to heat or cool overlay materials and concrete surfaces.

Use special equipment capable of metering, mixing, and distributing the resin. Distribute resin to the bridge deck in a continuous, uninterrupted operation such that unanticipated cold joints are not introduced. Use machinery that is approved by the manufacturer. Use an application machine that features positive displacement volumetric metering pumps controlled by a hydraulic power unit. Use motionless, in-line mixing so as to not overly shear the material or entrap air in the mix. Maximize material working time by mixing it immediately before dispensing.

Use truck-mounted equipment capable of dispensing the aggregate onto the deck in a uniform manner as directed or approved by the manufacturer. Broadcast the aggregate to cover the surface so that no wet spots appear and before the resin begins to gel. Drop the aggregate vertically so the level of the liquid is not disturbed. Ensure that the aggregate is broadcast within the time limits provided by the manufacturer according to the current ambient temperatures.

Remove excess aggregate between lifts and from the final cured overlay by air vacuuming or other approved means. Remove loose aggregate from expansion joints, relief joints, and deck drains.

SECTION 501 - PORTLAND CEMENT CONCRETE

501.02.01 General. Class S and SA concrete may be substituted for selected applications for Classes A, AA, D, DA, PAA, Modified A, AA, Modified D, DA, as approved by the Engineer. When the option of Class S or SA concrete is approved, submit details of a representative test section (mockup) for approval. Produce a trial batch of Class S and SA concrete, conforming to the proposed mix design. Place a test section when the atmospheric conditions approximate the conditions anticipated for placing the final work. Finish and cure the mockup according to this Section. If it is determined that the trial batch is not workable or not able to be properly placed or finished, modify the mix design or batching sequence. Submit the revised mix design and batching sequence and place another test section. Repeat the submittal and trial pour process until a workable and finished trial batch is produced. Do not place Class S or SA concrete until the mockup pour has been accepted.

Prepare a Concrete Quality Control Plan (CQCP) that addresses the production, informational quality control testing, transport, contingency plans for equipment breakdown or inclement weather, placement, finish, and cure of Portland cement for foundations, abutments, superstructures, decks, drainage structures, pavement and all other pours over 100 cubic yards. The submittal of a quality control plan, revisions, and weekly reports shall be considered as a necessary portion of the work; therefore, partial payments or portions thereof, as set forth under Subsection 109.06 may not be forthcoming until this requirement is complied with. Submit a weekly report each Monday whenever there was testing or inspections performed in the previous week. Include all necessary test results and inspection reports in the weekly report.

Submit the CQCP 20 working days before the start of work. The quality control plan shall include a specific description for concrete placement in foundations, abutments,

superstructures, decks, drainage structures, pavement and all other pours over 100 cubic yards. The quality control plan shall include the Department's pre-pour agenda information with a pre-pour inspection checklist form for each major structural pour. Do not proceed with major concrete work until the quality control plan has been submitted and approved. Approval of the CQCP does not imply any warranty by the Department that the plan will result in consistent contract compliance. Be responsible to demonstrate such compliance. Deviations from the plan shall be approved in writing. Failure to comply with the quality control plan may result in work suspension.

The CQCP shall include identification of sources and producers of all components used in the mix, aggregate production, informational quality control testing, delivery, placement, finish, and curing equipment and methods. Include personnel and their specific duties. Describe procedures to be followed in preparation of the pour, the event of equipment breakdown or inclement weather during placement, finishing, and curing. When pumping concrete for major structural pours, include, as part of the CQCP, a detailed plan addressing corrective measures to be taken to ensure in-place concrete properties meet the specified requirements. Curing procedures shall include when and how the concrete and the curing system are to be placed, frequency for monitoring, maintaining, and re-wetting the curing system. Include methods of protecting the covers from displacement from wind or weather, and method of preventing heat and moisture loss. In addition, describe the method to be used to protect pedestrian and vehicular traffic under structures.

Designate a quality control supervisor who shall be responsible for the preparation, submittal, implementation, and oversight of the quality control plan. The quality control supervisor shall be an employee of the Contractor, under the direct supervision of the superintendent, solely dedicated to the Contract and shall not be responsible for other day-to-day operations on the project. The quality control supervisor shall have the authority to stop any and all work outlined in the quality control plan if the work is not properly performed. The quality control supervisor shall be available for contact 24 hours a day during the placement and cure of any concrete. The quality control supervisor shall be capable of being on-site within 45 minutes of notification.

The quality control supervisor shall perform and document a pre-pour inspection 24 hours prior to the pour and at least 4 concrete inspections the day of the pour. The inspections shall be made before placement, during placement, when curing begins, and during curing. Inspect concrete forms, reinforcing steel adequately tied and supported, concrete quality control testing reports, fogging, and curing process and equipment. Submit a completed pre-pour inspection checklist 24 hours prior to each major structural pour. Include these quality control inspection reports in the weekly report and provide them within 24 hours of end of concrete placement, if requested.

The quality control supervisor shall also perform and document at least 6 daily cure inspections during the required cure period for each bridge deck pour, at a maximum of 4 hours between inspections. The inspections shall be made at the beginning of primary shift, at approximate time of high temperature, at approximate time of low temperature, and at the end of primary shift. Prepare a daily inspection report which includes date and time of inspection, weather conditions, locations of bridge deck where curing was checked (at least 3 representative locations), moisture condition of deck and burlap, surface temperature of deck concrete, and condition of curing equipment. Include the daily cure inspection reports in the weekly report and provide them within 24 hours, if requested.

The CQCP shall include performance of informational quality control testing by contractor personnel. Furnish personnel, laboratory, equipment, and materials needed to perform the required tests. Personnel, including the Quality Control Supervisor, shall require qualification as Western Alliance for Quality Transportation Construction (WAQTC) or Nevada Alliance for Quality Transportation Construction (NAQTC), as well as qualification as ACI Field Testing Certification, Grade I. Include test results in the weekly report and provide them within 24 hours of completion of each concrete pour, if requested. Material that does not meet contract requirements shall not be incorporated into the work. The quality control testing and required frequencies are as follows:

CONCRETE AGGREGATES		
Test	**Test Method**	**Minimum Sample Frequency**
Moisture Content	Nev. T112	One per 100 yd^3 or fraction thereof
Sieve Analysis	Nev. T206	One per 300 yd^3 or fraction thereof
Sand Equivalent	Nev. T227	One per 300 yd^3 or fraction thereof
Cleanness Value	Nev. T228	One per 300 yd^3 or fraction thereof
Specific Gravity and Absorption (Coarse)	Nev. T492	One per 500 yd^3 or fraction thereof
Specific Gravity and Absorption (Fine)	Nev. T493	One per 500 yd^3 or fraction thereof

PORTLAND CEMENT CONCRETE (Except Class S and SA)		
Test	**Test Method**	**Minimum Sample Frequency**
Air Content	Nev. T431	One per 50 yd^3 or fraction thereof
Unit Weight	Nev. T435	One per 50 yd^3 or fraction thereof
Slump	Nev. T438	One per 50 yd^3 or fraction thereof

CLASS S AND SA CONCRETE		
Test	**Test Method**	**Minimum Sample Frequency**
Slump Flow	Nev. T417	One per 50 yd^3 or fraction thereof
Visual Stability Index	Nev. T417	One per 50 yd^3 or fraction thereof
J-Ring	Nev. T418	One per 50 yd^3 or fraction thereof
Unit Weight	Nev. T416	One per 50 yd^3 or fraction thereof
Air Content	Nev. T416	One per 50 yd^3 or fraction thereof

Sample concrete aggregates from each stockpile to be used in pour in accordance with Test Method No. Nev. T200.

Sample Portland cement concrete in accordance with Test Method No. Nev. T425.

Sample and perform all tests for Class S and SA concrete within the first two trucks for the first sample frequency.

501.02.04 Admixtures. Class S and SA concrete admixture systems shall conform to AASHTO M194 (ASTM C494) Type F or Type G, or ASTM C 1017 requirements.

Include viscosity modifying admixtures (VMA) in the mix design. The mix design shall outline the dosage rate in oz/cwt. VMA's shall conform to ASTM C494, Type S. Adjust the dosage rate within the manufacturer's recommended range in order to obtain the desired flow and segregation characteristics while maintaining the required VSI.

501.02.05 Concrete Making Properties. Add the following to the table on the top of page 209 of the Standard Specifications:

Static Modulus of Elasticity and Poisson's Ratio of Concrete in Compression ... ASTM C469
Permeability ..... ASTM C1202

For Class S and SA concrete, the unit weight, air content, and compressive strength will be tested according to Test Method No. Nev. T416.

Concrete used in bridge decks, approach slabs, and bridge deck rail shall have a maximum permeability of 2000 Coulombs at 56 days.

The requirement for Static Modulus of Elasticity and Poisson's Ratio of Concrete in Compression will be specified on the plans.

In addition to meeting the requirements of this Subsection, Class S and SA concrete shall meet the additional following requirements:

TEST	TEST DESIGNATION	REQUIREMENTS
Slump Flow	Nev. T417	(a)
J-Ring	Nev. T418	(b)
Column Static Segregation	Nev. T420	Segregation Index 10% Max.

(a) The slump flow shall be a single value between 18 and 28 inches and shall be shown on the mix design. The slump flow of the tested concrete shall be within ± 2 inches of the value specified on the mix design. The maximum Visual Stability Index shall not exceed 1.
(b) The difference in slump flow values between Test Method No. Nev. T417 and Test Method No. Nev. T418 shall not exceed 2 inches.

Add the following to item “9.” in the first paragraph on page 210 of the Standard Specifications:

Not applicable for Class S and SA concrete, except for extended time slump requirements for concrete used in drilled shafts as specified in Subsection 509.02.01.

Add the following to the first paragraph on page 210 of the Standard Specifications:

22. The permeability of concrete (if required).
23. The modulus of elasticity of concrete (if required).

For Class S and SA concrete, add the following to the first paragraph on page 210 of the Standard Specifications:

24. The slump flow, visual stability index, j-ring measurement, and column static segregation index.

501.03.01 Equipment. For Class S and SA concrete, internal rodding or vibrating shall not be performed without prior approval.

501.03.06 Mixing. Prevent cement balling (intermittent clumping) and mix foaming by controlling the batch sequence, mixing speed, and mixing time.

Segregated concrete, as determined by Test Method No. Nev. T417 or Test Method No. Nev. T418, shall not be incorporated into any component of the concrete work.

For Class S and SA concrete, when delivering the concrete to the work site, completely discharge each delivery truck within 60 minutes. The discharge time can be extended to 90 minutes for drilled shafts. In hot weather, or under conditions contributing to quick stiffening of the concrete, a delivery time of less than 60 minutes may be required. The Contractor may propose delivery time exceeding 60 minutes if they can demonstrate during a trial pour that all required fresh concrete properties are maintained for the maximum proposed delivery time. The trial pour shall be completed in similar weather conditions to the anticipated placement conditions.

For Class S and SA concrete, completely discharge each delivery truck within 20 minutes. Place the concrete in continuous layers. When it is necessary by reason of emergency or other delay to place less than a complete horizontal layer in one operation, terminate the layer by using a vertical bulkhead. Do not rod or vibrate the concrete to attempt to restore the fluidity to the mix.

501.03.10 Trial Slab and Process Control Testing. If silica fume is used in bridge deck concrete, construct a trial slab at least 30 days prior to placement of concrete on a bridge deck. Submit a written plan for the casting of the trial slab. The written plan shall include, but is not limited to, the location of the slab, the equipment and personnel used for construction, and disposal of the slab. Prior to placement of the trial slab, conduct a pre-construction conference.

Use approved mix designs. Place concrete at a location other than the bridge deck, but under conditions similar to those that exist during bridge deck concrete placement. The trial slab shall have a minimum length and width of 50 feet and have a depth of 8 inches. Reinforce slab with a top and bottom mat of # 5 bars spaced 6 inches longitudinally and transversely. Place top mat at a depth 2.5 inches from the top of the slab. Place bottom mat at a depth 1.5 inches from the bottom of the slab. The trial slab shall be wet-cured as specified for bridge decks according to Subsection 501.03.08. Use personnel such as the superintendent, key operators, and finishers that are the same personnel who will be involved in the construction of the bridge deck. Demonstrate the use of equipment, proficiency of personnel, and techniques for mixing, transporting, placing, and curing of the concrete during the trial. Fifteen days after placement of the trial slab, conduct a post construction critique of the trial slab placement.

Do not commence placement of the bridge deck concrete until after issues from the post construction critique of trial slab construction have been resolved to the satisfaction of the Engineer.
Upon notification, remove and dispose of trial slabs according to Subsection 107.14.

SECTION 502 - CONCRETE STRUCTURES

502.03.23 Portable Precast Concrete Barrier Rail. Paint portable precast concrete barrier rail white with paint conforming to Subsection 714.03.03.

SECTION 506 - STEEL STRUCTURES

506.01.01 General. This work also consists of furnishing and installing approach slab restrainer units.

506.02.01 General. The approach slab restrainer units are shown in their entirety in the details shown on the plans. The items that make up the restrainer units are shown on the above-mentioned details and shall conform to the specifications shown on the plans.

506.03.28 Restrainer Units. Install the restrainer units in the structures according to the details shown on the plans.

This page intentionally left blank.

ATTACHMENT 26-2
CITY OF LAS VEGAS SPECIAL PROVISIONS

This page intentionally left blank.

Hansen Number 56966

SPECIAL PROVISIONS

MAY 2015

PROJECT NEON DESIGN BUILD

PREPARED BY:

CITY OF LAS VEGAS

TABLE OF CONTENTS

SECTION	TITLE
SECTION 506	STEEL STRUCTURES
SECTION 622	CONSTRUCTION SURVEYING BY THE CONTRACTOR
SECTION 623	TRAFFIC SIGNALS AND STREET LIGHTING
SECTION 628	TRAFFIC STRIPING, PAVEMENT MARKINGS, AND CURB MARKINGS
SECTION 630	SANITARY SEWERS
SECTION 699	SITE FURNISHINGS
SECTION 328000	IRRIGATION

SECTION 506

STEEL STRUCTURES

DESCRIPTION

506.01.01 GENERAL

ADD THE FOLLOWING TO THIS SUBSECTION:

This work shall include construction of metal handrails.

CONSTRUCTION

ADD THE FOLLOWING SUBSECTION:

506.02.02 STEEL SURFACE TREATMENT

All steel shall be:

Painted. The paint system shall be a 3-coat system suitable for the intended use as recommended by the paint manufacturer and approved by Engineer. Application shall be in accordance with the recommendations of the paint manufacturer. Applicator shall be certified by the paint manufacturer for the approved paint system. Color shall be as selected by Owner from manufacturer's standard colors similar to the colors identified for the Grand Central Industrial bridge over UPRR in the Project NEON DB1-4 Landscape & Aesthetic Requirements; provide 3 color samples for Owner's review. All painted surfaces shall be blast cleaned in accordance with Society for Protective Coatings Surface Preparation Specifications No. 7, latest edition, (SSPC-SP10) Near White Blast Cleaning. Painted bridges shall be configured such that all surfaces and connections are either fully sealed or allow access for adequate paint coverage. Sealing shall be accomplished by welding except that long continuous seams may be sealed with caulk prior to painting. All surfaces shall be painted, with the exception of expansion joint cover plates, teflon surfaces, bolted connections, and faying surfaces. Touch up paint shall be provided to paint outer surfaces of bolted splices and areas of damaged paint.

END OF SECTION 506

ADD THE FOLLOWING SECTION TO DIVISION II – CONSTRUCTION DETAILS

SECTION 622 – CONSTRUCTION SURVEYING BY THE CONTRACTOR

DESCRIPTION

622.01.01 GENERAL

A. The Contractor shall, under supervision of a Professional Land Surveyor, registered in the state of Nevada, furnish and set construction stakes establishing locations, lines, and slope stakes for roadway, storm drain, drainage structures, sewer, laterals, and for all other improvements for project necessary to ensure conformance of work to lines, elevations, locations, and grades as shown on the Plans and in these Special Provisions. Any horizontal or vertical discrepancies shall be reported to Engineer prior to commencement of construction. Any revisions or changes approved by Engineer that affect lines, grades, elevations or locations of any improvement shall be indicated on As-Built (Record) Drawings.

B. If necessary, the Contractor shall also perform and provide to the Engineer those items described in subsection 203.04.01 of the USS. Any revisions or changes approved by the Engineer that affect the lines, grades, elevations or locations of any improvement shall be indicated on the As-Built (Record) Drawings.

C. Contractor shall preserve property line and corner survey points. If their destruction is determined by Engineer to be unavoidable, and their replacement is not called for on the plans, Owner shall replace or pay for their replacement under this contract as determined by Engineer. Markers that are disturbed or destroyed by Contractor's operations without prior approval by the Engineer shall be replaced by Contractor at no additional cost to the Owner. Replacement shall be done only by a Nevada Professional Land Surveyor and in accordance with the USS. A monument tie sheet for replacement of permanent survey monuments shall be submitted to Engineer for approval.

D. When a permanent survey marker and/or monument is located within the construction area of any roadway, storm drain, drainage structures, sewer line or channel improvement, the Contractor shall adjust the cover or replace the monument as noted on the plans. The cost of replacement or adjustment of said monuments shall be included in the lump sum bid for Construction Survey. If monuments are to be installed as part of the work, they shall be placed in accordance with the USD numbers 239 through 243 and Section 621 of the USS.

E. The Contractor shall, under the supervision of a Professional Land Surveyor, prepare and provide GPS location and mapping of as-built conditions for all proposed sanitary sewer and storm drainage facilities as described on the Project Drawings and in this Section.

MATERIALS

622.02.01 BLANK

CONSTRUCTION

622.03.01 GENERAL

A. Prior to all work in this section, the Contractor shall carefully inspect all installed work and verify that all such work is complete to a point where this installation may properly commence.

B. The Contractor shall verify that all work can be installed in accordance with all pertinent codes and regulations, Contract Drawings and referenced standards.

C. The Contractor shall verify that there are no conflicts with existing utilities prior to the start of work.

D. In event of a discrepancy, the Contractor shall immediately notify the Engineer in writing.

E. Installation of work in areas of discrepancy shall not proceed until all such discrepancies have been fully resolved.

F. After stakes and marks have been set, it shall be the responsibility of the Contractor to protect the stakes and marks. Should any of the stakes or marks be destroyed or disturbed by the Contractor's operations or otherwise, the costs of replacing said stakes or marks shall be paid by the Contractor.

G. The Engineer, at his discretion, may periodically have survey work performed to verify conformance to the construction plans. Any nonconformity found to be the fault of the Contractor, or the Professional Land Surveyor, shall be corrected at no additional cost to the Owner.

H. Upon completion of the project and as a condition for final payment authorization, the Contractor shall furnish to the Engineer a Record of Survey/monument tie map and a certification attested to by the Professional Land Surveyor that the work performed for this contract has been constructed to the lines and grades as described in the As-built (Record) Drawings. When requested, the Contractor shall also provide the Engineer with copies of all field notes, computations, and other related work performed by the Professional Land Surveyor.

622.03.02 FINAL ACCURACY

A. Surface Drainage Structures (including all concrete or asphalt gutters and drains) shall be installed within 0.05 feet horizontally and 0.05 feet vertically from the location taken from the project plans, and shall not vary more than 10 percent of the gradient shown on the plans.

B. Monument Cases and Brass Caps shall be centered to within 0.01 feet horizontally of the position as called for on the plans, and the ties to that monument.

C. Sanitary and Storm Drainage Sewer Systems shall be installed within 0.05 feet horizontally and 0.05 feet vertically of the exact location taken from the project plans. In addition, the gradient of any 10-foot section of pipe shall not vary by more than 10 percent of the gradient shown the project plans

622.03.03 INSTALLED/EXPOSED UTILITY SURVEYING

A. After construction of the approved plans and before backfilling, survey shall be conducted indicating the size, horizontal and vertical location, and configuration of any utility constructed with this project or utility exposed during construction, and utility encasement if applicable. Utility final location information shall be described by coordinates which shall be based on the official horizontal and vertical control networks of the City of Las Vegas and be certified by a Nevada professional land surveyor to have positional certainties within +/- 0.3-ft.

B. Survey measurements for utilities constructed or exposed during the course of construction including but not limited to pipes, manholes, drop inlets, conduits, cables, encasements, boxes, vaults and appurtenances shall be located to the extent possible within the excavation area. Measurements shall be taken at a minimum of 100-ft intervals, at all exposed angle points, deflections of the utility exceeding +/- 0.5-ft, at all exposed points that enter/exit the excavation or the public right-of-way, and sufficient measurements to accurately define curving layout.

C. Potholes performed by the contractor prior to or during construction shall be surveyed indicating the size, location, burial depth, and configuration of the utility. Pothole location information shall be tied to the official horizontal and vertical control networks of the City of Las Vegas and be certified by a Nevada professional land surveyor.

D. Utility final location information shall be submitted on paper and in electronic form, on a form specified by the City Surveyor.

E. Interim survey progress reports shall be submitted to the Engineer certifying sufficient survey measurements have been performed prior to backfilling as required by this section on a weekly basis or as directed.

SECTION 623

TRAFFIC SIGNALS AND STREET LIGHTING

DESCRIPTION

623 G.01.01 GENERAL

ADD THE FOLLOWING PARAGRAPHS TO THIS SUBSECTION:

I. The Contractor shall provide all labor, materials, equipment, transportation and services required to install the street lighting, traffic control system, and related items on the plans and in the specifications resulting in complete and operational systems, to include fully functional opticom, video detection, pedestrian detection, and loop detection system complete with the manufacturer's latest versions of firmware.

J. All equipment shall function as designed. All lighting standards shall be fully operational within fifteen (15) days after installation. The luminaries shall be leveled before they are energized.

K. The Contractor shall maintain the new lighting system and traffic signal system from the date energized until the entire project has been accepted by the City of Las Vegas. The Contractor shall repair or replace any defective component of the systems within 24 hours after notice in writing by the Engineer if of a non-hazardous nature. If public safety is endangered, the Contractor shall take immediate steps to correct the problem after verbal notice by the Engineer.

L. The contractor shall have a lighting representative present at the time the City inspects the street lighting installations.

MATERIALS

623 G.02.04 CONDUCTORS AND CABLE

DELETE PARAGRAPH "A.4" AND REPLACE WITH THE FOLLOWING:

A. 4. Electrical cable for traffic signals shall be IMSA 20-1 approved signal cable of proper size for the required installation unless otherwise specified in the Contract Documents. All traffic signal cable shall be 25-conductor, No. 14 AWG solid copper wire traffic signal cable or as specified in the Contract Documents or directed by the Engineer.

CONSTRUCTION

623 G.03.01 MAINTENANCE OF EXISTING AND TEMPORARY ELECTRICAL SYSTEMS

ADD THE FOLLOWING TO PARAGRAPH "H" OF THIS SUBSECTION:

Prior to start of work, Contractor shall submit drawings stamped by a Nevada Professional Engineer showing support of facilities covered by Section 623 for approval by City Traffic Engineer

for all trenches that will expose greater than eight feet of conduit. The Contractor shall submit the support system to be used for all trenches exposing up to 8 feet of conduit for approval prior to trenching. Conduit support systems, at a minimum shall support all joints in the conduit, prevent the decoupling of joints, and prevent deflection greater than 6 inches.

Some signalized intersections may require temporary signalization in lieu of support.

ADD THE FOLLOWING PARAGRAPHS TO THIS SUBSECTION:

J. All equipment and materials shall be as manufactured or modified by the manufacturer and installed by the Contractor in the manner for which it was designed and intended. No equipment may be modified by the Contractor unless prior written permission is provided by the Engineer.

K. Existing service shall remain fully operational during construction. Outages required shall be scheduled with the Owner and timing devices reset after resumption of service. The Contractor shall field verify wiring connections and routing prior to disconnecting any conductors. The modification, extension or removal of the existing conductors and equipment shall be inspected by and accepted by the Engineer. Electrical work shall be in accordance with the requirements of the National Electrical Code.

L. The data indicated on the plans and in these specifications is as exact as could be secured, but its absolute accuracy is not guaranteed. Exact locations, distances, levels, and other conditions will be governed by unforeseen obstacles in the field.

M. The Contractor shall use the plans and these specifications for guidance, and secure the Engineer's approval for all changes of location or scope of work. The Engineer should be consulted regarding the exact locations of pullboxes, poles and cabinets for the traffic signal system.

N. Once the Contractor commences work on the Project, the Contractor shall provide all maintenance for existing traffic signal facilities that are to be modified or replaced, except that the City will pay for power. The Contractor shall provide the above maintenance until the City gives written notice that the City accepts signals back for maintenance at the end of the Project. The above maintenance does not include any prior damage such as burned out signal displays, non-operative detection, or other malfunctioning equipment. The Contractor shall provide written documentation of all non-functioning and malfunctioning traffic signal equipment before commencing work on the project. This malfunctioning equipment shall be inspected by both the Contractor and the Engineer, or Engineer's Designee, prior to the commencement of work. In the event that the Engineer does not receive written notice and the Contractor begins work on the project, this will suffice as evidence that all equipment is functional and operational. If any traffic signal equipment fails or malfunctions during the course of the Project, the Contractor shall repair or replace traffic signal facilities as necessary to provide a fully functioning system before final acceptance for maintenance by the City. For traffic signals, repair work by qualified electricians shall commence within one hour of notification via the Contractor's 24-hour emergency response phone number, at which time the Contractor will have two hours to correct the noted violation. The City will program for the Traffic Signal Controller and the Malfunction Management Unit (MMU).

1. If the repair is not completed within the two-hour time limit, the **Contractor will be assessed $200.00 per hour until the repair is complete.**
2. This condition may cause the Project to "Stop Work"; this will not be grounds for a time extension of the contract.

623 G.03.05 EXCAVATION AND BACKFILLING

ADD THE FOLLOWING PARAGRAPHS TO THIS SUBSECTION:

M. All trenching and backfill shall comply with applicable portions of the USS, USD and plans. All trenching shall be deep enough to insure a minimum of twenty four inches (24") of cover over the conduit measured from the top of conduit to finish grade, *with the exception* of interconnect conduit which shall have a minimum of thirty inches (30") of cover over the conduit. The backfill in street areas shall be Type II gravel compacted to 95% relative density or controlled low strength material (CLSM) Fill. No trench shall be left open after established working hours without approval of the Engineer.

N. Conduit locations on the plans are for reference only. Actual locations are to be determined by the Contractor as to the most economical location --either behind the curb or in front of the lip of the gutter--but in either case, the conduit must remain parallel to the back of curb or the edge of pavement between the lighting standards, and the location shall be approved by the Engineer. "As Built" marked prints showing installed locations shall be given to the Engineer by the Contractor.

O. All conduit that is terminated, stubbed and capped for future use shall be marked by a "+" a minimum of 3 inches high and directly above the conduit, cut into the face of the curb, wall, concrete paving, etc.

623 G.03.07 FOUNDATIONS

ADD THE FOLLOWING PARAGRAPHS TO THIS SUBSECTION:

B. 3. Crash caps above foundations shall be sloped away from poles. All traffic signal poles shall be plumb AFTER the signal heads are in place. Any leveling shall be made before the grout cap is poured over the foundations.

C. 6. Foundations shall be excavated without disturbing surrounding material. All loose material shall be removed before concrete is placed into the opening. Foundations shall not be over-excavated.

623 G.03.08 WIRING AND CONDUIT

ADD THE FOLLOWING PARAGRAPHS TO "E" OF THIS SUBSECTION:

1. Chair lugs shall be used for termination of solid conductors.

2. Solid conductors shall not be terminated with crimp-on connections.

ADD THE FOLLOWING PARAGRAPH TO THIS SUBSECTION:

V. When new conduit is to be joined to existing conduit, the Contractor shall verify the integrity of the existing conduit and make necessary repairs. The Engineer shall approve any additional repair work prior to commencing.

623 G.03.09 ELECTRICAL SERVICE

ADD THE FOLLOWING PARAGRAPHS TO "A" OF THIS SUBSECTION:

Each service provided by the Contractor shall have a 200 amp rating for traffic signal system, streetlight circuits, or combined services.

Services shall be 200 amp pad mount (unless otherwise noted in the plans) and shall be equipped with one 60 amp single pole breaker for the signal and one 40 amp single pole breaker for the intersection streetlights. In addition, other breakers as may be shown in the service panel schedule in the plans will be required.

The Contractor shall obtain all addresses for new services from the City of Las Vegas, Department of Planning and Development, 333 Rancho Drive, (702) 229-5408.

ADD THE FOLLOWING PARAGRAPH TO "B" OF THIS SUBSECTION:

It shall be the Contractor's responsibility to coordinate all work associated with service point connections required by this contract with Nevada Energy.

623 G.03.10 PULL BOXES

ADD THE FOLLOWING PARAGRAPH TO THIS SUBSECTION:

E. The interior of pull boxes shall be void of any other materials except conduit risers and necessary wiring. All excess materials shall be removed to promote drainage.

ADD THE FOLLOWING SUBSECTION:

623 G.03.13 SALVAGING ELECTRICAL EQUIPMENT

A. Where shown on the plans or ordered by the Engineer, existing electrical equipment to be removed, including controller units, cabinets, signal heads, luminaires, standards, mast arms, ballasts, transformers, service equipment, pull boxes, and detector contact units shall be salvaged for reuse by the maintaining agency.

B. Care shall be exercised in removing and salvaging electrical equipment so that it will remain in its original form and existing condition whenever possible. Attention is directed to the provisions in subsection 107.11, "Responsibility for Damage Claims", and 107.12 "Protection and Restoration of Property and Landscape". The Contractor will be required to replace, at his expense, any of the above-mentioned electrical equipment, which, as determined by the Engineer, has been damaged or destroyed by reason of his operations.

C. Unless otherwise specified, underground conduit, conductors, foundations, and detector frames not reused shall become the property of the Contractor and shall be removed from the City right-of-way, except if not interfering with other construction, said materials, except foundations, may, with the written approval of the Engineer, be abandoned in place. Certain other materials, where shown on the plans, shall also become the property of the Contractor.

D. Unless otherwise specified, foundations to be abandoned shall have the top 18" below the crash cap removed and the resulting excavation backfilled. Attention is directed to the provisions in subsection 623 G.03.05, "Excavating and Backfilling", regarding foundations to be abandoned.

E. Holes formed by removing pull boxes and foundations shall be filled with material equivalent to the surrounding material.

F. All street lighting and traffic signal equipment removed and / or designated to be salvaged shall be delivered by the Contractor to the appropriate CLV Service Yard with a means to unload. A 48-hour notice of delivery is required. Call 229-6331 to set up delivery time. Repair of any damage to equipment during this process will be the contractor's responsibility, at no additional cost to the City.

ADD THE FOLLOWING SUBSECTION:

623 G.03.14 REINSTALLING SALVAGED ELECTRICAL EQUIPMENT

A. When salvaged electrical equipment is to be reinstalled, the Contractor shall furnish and install all necessary materials and equipment, including signal mounting brackets, anchor bolts, nuts, washers, and concrete as required to complete the new installation.

B. All traffic signal, flashing beacon, and lighting fixtures to be reinstalled shall be cleaned and relamped.

C. Existing materials required to be relocated and found to be unsatisfactory by the Engineer shall be replaced by new material and the cost therefore will be paid for as extra work as provided in subsection 104.03, "Extra Work".

ADD THE FOLLOWING SUBSECTION:

623 G.03.15 STOCKPILING SALVAGED ELECTRICAL EQUIPMENT

A. Existing equipment removed and not reused shall be salvaged, dismantled and returned to the maintaining agency during normal working hours. Call the maintaining agency to arrange for a time and location to stockpile the salvaged electrical equipment. An inventory of salvaged material shall accompany each delivery.

TRAFFIC SECTION

623 T.02.01 TRAFFIC SIGNAL CONTROLLER CABINETS

DELETE PARAGRAPH "D" OF THIS SUBSECTION AND REPLACE WITH THE FOLLOWING:

D. Unless otherwise specified, all cabinets shall be painted with two coats of white enamel both inside and out. Unpainted, Polished aluminum cabinets are not acceptable.

ADD THE FOLLOWING TO PARAGRAPH "E" OF THIS SUBSECTION:

The lifting tabs shall be bolted in place.

DELETE PARAGRAPH "F.3" AND REPLACE WITH THE FOLLOWING:

There shall be 3 aluminum shelves provided with all cabinets.

DELETE PARAGRAPH "J" AND REPLACE WITH THE FOLLOWING:

Cabinets shall have 2 light fixtures with lamps mounted in the cabinet interior.

DELETE PARAGRAPH "J.1" AND REPLACE WITH THE FOLLOWING:

One fluorescent or LED equivalent light shall be mounted over the door, at a location least likely to be damaged, and shall be a minimum of 20 inches in length.

DELETE PARAGRAPH "J.2" AND REPLACE WITH THE FOLLOWING:

The second light fixture shall be a 15 watt fluorescent or LED equivalent fixture and shall be attached to the bottom of the lowest shelf above the back-panel and field terminals.

ADD THE FOLLOWING PARAGRAPH TO "L.3" OF THIS SUBSECTION:

The AutoCAD format used shall be compatible with the current version of AutoCAD used by the city.

DELETE PARAGRAPH "L.5.i " AND REPLACE WITH THE FOLLOWING:

Two dual-circuit, solid state, NEMA flashers having a flash rate of 50 to 60 flashes per minute (see NEMA TS-1, Section 8, "Solid State Flashers") shall be installed.

DELETE PARAGRAPH "L.5.i.1" AND REPLACE WITH THE FOLLOWING:

The red position of the load switch bays shall be operated from the flasher contacts as follows:

Flasher 1, contact A - phases 1, 5, and OLA

Flasher 1, contact B - phases 2, 6, and OLC

Flasher 2, contact A – phases 3, 7 and OLB

Flasher 2, contact B – phases 4, 8 and OLD

DELETE PARAGRAPHS "L.5.j.3" AND REPLACE WITH THE FOLLOWING:

Two single, fourplex, U-ground type of convenience outlets shall be furnished for video equipment and other electronic test equipment.

DELETE PARAGRAPHS "L.5.j.3.b" AND REPLACE WITH THE FOLLOWING:

The outlets will be located no more than 12 inches from the roof of the cabinet, one on each side panel of the cabinet interior.

DELETE PARAGRAPH "L.5.j.4" AND SUBPARAGRAPHS.

DELETE PARAGRAPH "L.5.k.3.c".

DELETE PARAGRAPH "L.5.l.2.d".

DELETE PARAGRAPH "L.5.l.4.a".

DELETE PARAGRAPH "L.5.l.6.d.3" AND REPLACE WITH THE FOLLOWING:

The toggle switches shall place a call into the controller for the associated pedestrian or vehicular phase when placed in the down (Test) position. This position shall be a momentary position.

ADD THE FOLLOWING PARAGRAPHS TO "L.5.l.6" OF THIS SUBSECTION:

8) An EXTERNAL MINIMUM RECALL (identified EMR) switch shall be provided on the interior of the cabinet door for troubleshooting purposes. It will be a single pole-single throw switch and will apply logic ground to the EMR input to the controller. An LED circuit will also be wired to indicate the switch is activated.

DELETE PARAGRAPHS "L.5.m" AND REPLACE WITH THE FOLLOWING:

All cabinets shall be equipped with power input filters as manufactured by **Innovative Technologies, Inc** model number **HS-P-SP-120-60-RJ** or approved equal, and for telecommunications line protection shall be Model MDF 6 95V or MF 25 95V.

ADD THE FOLLOWING PARAGRAPHS TO "L.5." OF THIS SUBSECTION:

n. Solid state load contactor switch.
o. All cabinets shall be equipped with a fourplex auxiliary power outlet and a duplex GFCI power outlet.

ADD THE FOLLOWING PARAGRAPHS TO THIS SUBSECTION:

M. All field cables and interconnect cable entering the traffic controller cabinet shall be permanently labeled in the cabinet with their location and destination point in the intersection (i.e. "NW Corner – XX-A Pole"). Interconnect cables shall be labeled with their direction of

travel (i.e. “Interconnect – From South” or “Interconnect – To North”). Wherever possible, the phase shall be noted on the label (i.e. “NE Corner – XX-A Pole – phase 8”).

The wires shall be identified using 1-inch wide UV resistant marking tape and the tape manufacturers recommended permanent black ink marker. Once marked, a suitable diameter piece of clear heat shrink tubing shall be installed and shrunk to protect the marking tape. The tubing shall extend 1-inch past the extent of the label in each direction along the wire to prevent moisture and dirt penetration.

623 T.02.02 TRAFFIC SIGNAL CONTROLLER CABINET EQUIPMENT

ADD THE FOLLOWING PARAGRAPH TO “C” OF THIS SUBSECTION:

4. When Audible Tactile Pedestrian Push Buttons (PPB) are specified, an Audible Tactile interface panel shall be provided and mounted on the middle left side wall above the loop detector terminal panel. Central Control Unit (CCU) and failsafe cables shall be provided, neatly installed and terminated per manufacturer instructions. A CCU shall be provided for all cabinets configured for Audible Tactile PPBs.

DELETE PARAGRAPH “E” AND SUBPARAGRAPHS AND REPLACE WITH THE FOLLOWING:

E. Loop Detection:

1. When specified, the cabinet shall be wired with a one (1) 12 slot rack-mounted loop detection unit. There shall be enough capacity for 12-two (2) channel amplifiers (Total of 24 vehicle detector channels). The rack will be wired with the breakdown as follows:

    a. There shall be two (2) channels in the detector rack assembly for each of the phases 1, 3, 5, and 7, wired for left turn operation. These will be wired as presence loops, with each conductor independently terminated onto an individual terminal elsewhere within the cabinet, which can readily be moved. The “Relay Common” must terminate, and then it must be wired to logic ground.

    b. There shall be three (3) channels in the detector rack assembly for each of the phases 2, 4, 6, and 8 wired for thru-traffic operation. These will be wired as presence loops, with each conductor independently terminated onto an individual terminal elsewhere within the cabinet, which can readily be moved. The “Relay Common” must terminate, and then it must be wired to logic ground.

    c. There shall be one (1), channel in the detector rack assembly for each of the phases 2, 4, 6, and 8 wired for thru-traffic “call loop” operation. These will be wired not to output a call during the detected phase green service, with each conductor independently terminated onto an individual terminal. The “Relay Common” must terminate independently, then it must then be wired to the red and yellow output from the controller (this must be diode isolated). Any other

method of “call loop operation” must be approved by Traffic Engineering & Field Operations before acceptance.

d. All detector rack slots must be clearly marked as to the appropriate phase to which it belongs.

e. The panel to be used for field input wiring (loop lead-ins) shall be installed on the lower left sidewall.

2. When specified, the cabinet shall be wired with a two (2) 12 slot rack-mounted loop detection units. There shall be enough capacity for 24-two (2) channel amplifiers (Total of 48 vehicle detector channels). One rack will be wired as specified in Paragraph E.1.a., b., and c, above. The second rack will be wired with the breakdown as follows:

   a. There shall be two (2) channels in the detector rack assembly for each of the phases 1, 3, 5, and 7, wired for left turn operation. These will be wired as presence loops, with each conductor independently terminated onto an individual terminal elsewhere within the cabinet, which can readily be moved. The “Relay Common” must terminate, and then it must be wired to logic ground.

   b. There shall be four (4) channels in the detector rack assembly for each of the phases 2, 4, 6, and 8 wired for thru-traffic operation. These will be wired as presence loops, with each conductor independently terminated onto an individual terminal elsewhere within the cabinet, which can readily be moved. The “Relay Common” must terminate, and then it must be wired to logic ground.

   c. All detector rack slots must be clearly marked as to the appropriate phase to which it belongs.

   d. The panel to be used for field input wiring (loop lead-ins) shall be installed on the lower left sidewall.

3. All cabinets shall be provided with a complete set of two (2) channel rack mount detectors and appropriate number of power supply(s) to fully populate the rack detector assemblies. Two channel rack detector amplifiers shall be Eberle Design Inc., Model 622T (or equivalent) with vehicle extend and delay capability. Detector rack power supply shall be Eberle Design Inc., Model PS 175 (or equivalent).

DELETE PARAGRAPH TO “F.1” AND REPLACE WITH THE FOLLOWING:

All cabinets shall be equipped with encoded Global Traffic Technologies (GTT) Opticom compatible Emergency Preemption.

DELETE PARAGRAPH TO “F.3” AND REPLACE WITH THE FOLLOWING:

Provide one 4 channel rack mounted phase selector card and model 760 rack.

DELETE PARAGRAPH "F.4" AND SUBPARAGRAPHS AND REPLACE WITH THE FOLLOWING:

Cabinets shall be wired with an opticom green-sense harness terminated on the field terminals.

DELETE PARAGRAPH "F.5" AND SUBPARAGRAPHS AND REPLACE WITH THE FOLLOWING:

5. The wiring from the phase selector to the back panel shall be as follows:

   Channel A to Controller Plug A, Pin q.

   Channel B to Controller Plug A, Pin y.

   Channel C to Controller Plug B, Pin W.

   Channel D to Controller Plug B, Pin X.

DELETE PARAGRAPH "G" AND SUBPARAGRAPHS AND REPLACE WITH THE FOLLOWING:

G. Supplemental D Plug Interface Panel:

1. The cabinet shall be equipped with a D panel complete with wiring harnesses to connect the D panel to the D plug on the controller. The cabinet shall be wired to route each of the 48 detector inputs separately into the controller.

The D Panel shall have an integral plug and shall be supplied with two 6 foot connector cables that that can connect the D-panel to the D-plug in either a Naztec 980 ATC or Siemens M53 controller.

The integral plug on the D panel shall be a 57 pin female Amphenol flange mount P/N 206438-1 or approved equal. The connector cables shall each have a 57 pin male Amphenol P/N 206437-1 plug on one end to connect to the interface panel.

The opposite end of one cable will have a 37 pin male D-sub plug to connect to an M53 controller, and the opposite end of the second cable will have a 57 pin male Amphenol P/N 206437-1 plug to connect to an ATC controller (see diagram below).

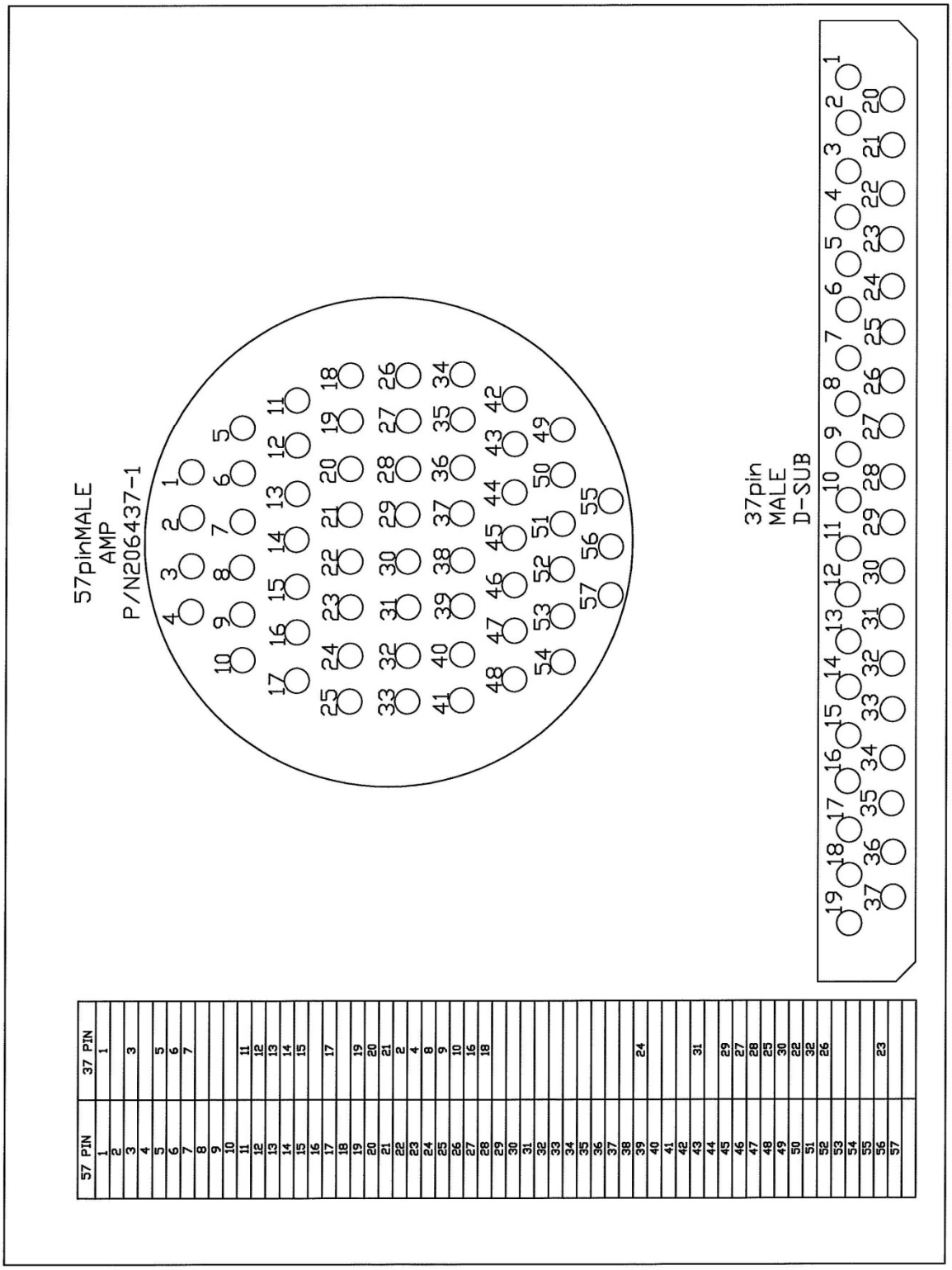

57 PIN	37 PIN
1	1
2	
3	3
4	
5	5
6	6
7	7
8	
9	
10	
11	11
12	12
13	13
14	14
15	15
16	
17	17
18	
19	19
20	20
21	21
22	2
23	4
24	8
25	9
26	10
27	16
28	18
29	
30	
31	
32	
33	
34	
35	
36	
37	
38	
39	24
40	
41	
42	
43	31
44	
45	29
46	27
47	28
48	25
49	30
50	22
51	32
52	26
53	
54	
55	
56	23
57	

DELETE PARAGRAPH "H.1" AND REPLACE WITH THE FOLLOWING:

Unless otherwise specified in the Contract Documents, all traffic control cabinets shall be supplied with a Malfunction Management Unit (MMU) with 16 channels.

DELETE PARAGRAPH "H.2" IN ITS ENTIRETY

DELETE PARAGRAPH "H.3" AND REPLACE WITH THE FOLLOWING:

Each MMU shall be furnished with the program card fully programmed for standard NEMA 8-phase operation.

DELETE PARAGRAPH "H.4" AND REPLACE WITH THE FOLLOWING:

Harnesses shall be wired in accordance with the diagram shown below.

CONFLICT MONITOR PANEL

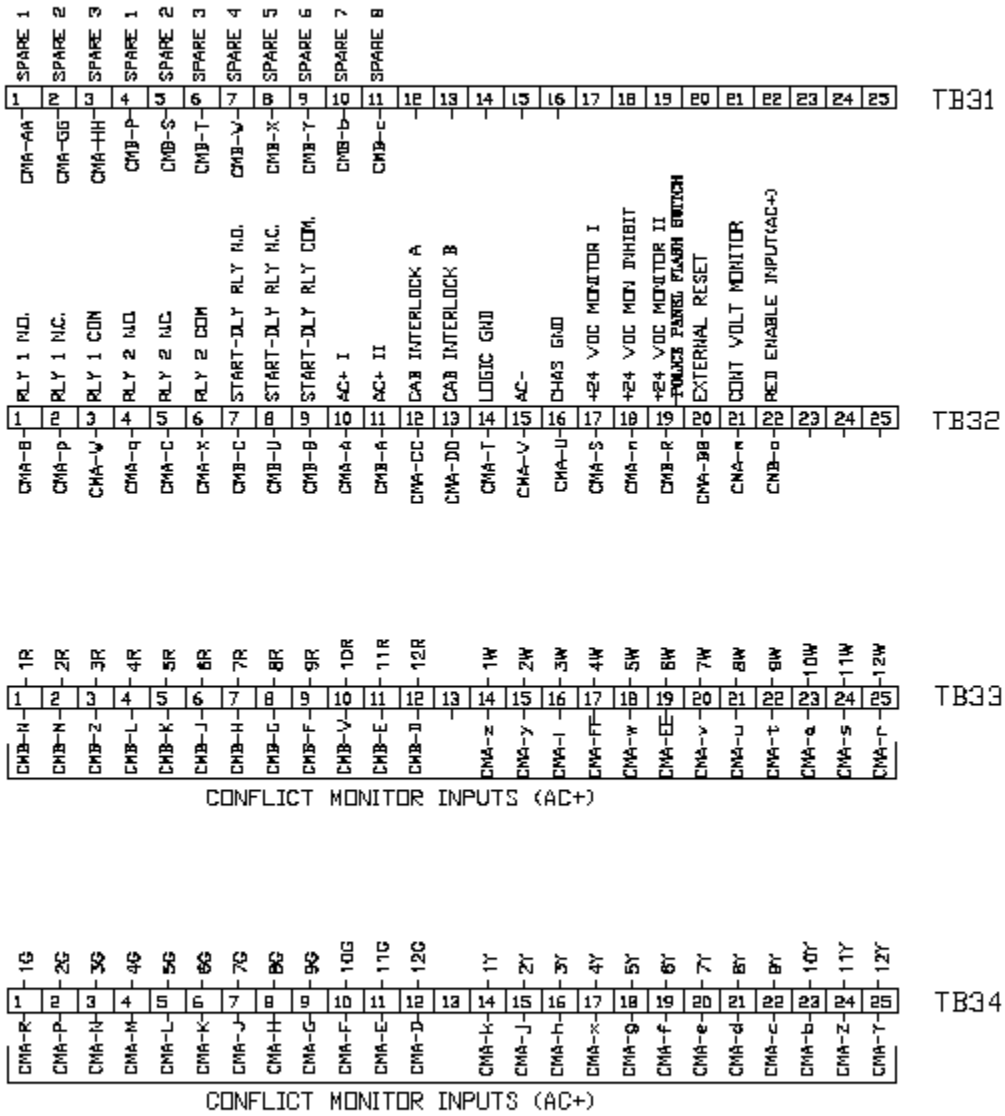

DELETE PARAGRAPH "H.5" IN ITS ENTIRETY

DELETE PARAGRAPH "H.6" IN ITS ENTIRETY AND REPLACE WITH THE FOLLOWING:

The wiring harness for the MMU shall have independent termination points.

DELETE PARAGRAPH "H.9" AND REPLACE WITH THE FOLLOWING:

Unused wires shall be terminated on a separate back panel terminal that is easily accessible from the front of the cabinet without removing other panels.

DELETE PARAGRAPH "I" AND SUBPARAGRAPHS AND REPLACE WITH THE FOLLOWING:

I. All conflict monitors shall be NEMA standard, meeting all requirements of Section 6 of the latest edition of NEMA TS 2 and shall meet the following requirements:

2. Malfunction Management Units shall have 16 channels.

3. Malfunction Management Units shall be capable of monitoring "Flashing Yellow Arrow" operations.

4. Malfunction Management Units shall be model MMU-1600GE as manufactured by Reno A&E, or model MMU2-16LEip as manufactured by Eberle Design, Inc., or approved equal.

5. Malfunction Management Units shall be wired per the "Interlock Diagram" shown below with the appropriate relays.

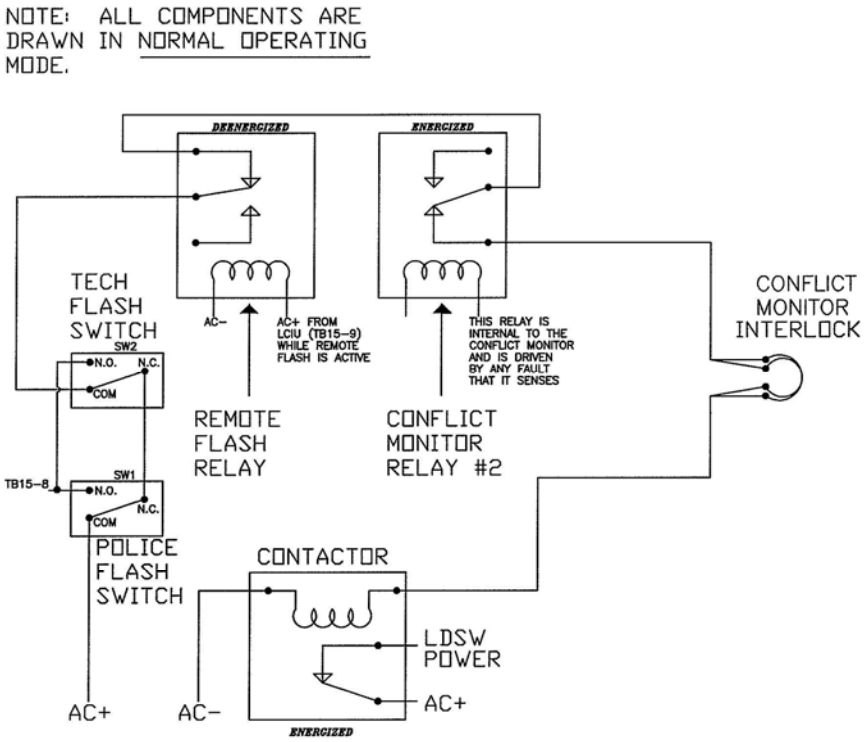

INTERLOCK DIAGRAM

623 T.02.03 TRAFFIC SIGNAL CONTROLLERS

DELETE "B.3" OF THIS SUBSECTION IN ITS ENTIRTY.

DELETE "B.6.d" OF THIS SUBSECTION AND REPLACE WITH THE FOLLOWING:

The contractor shall be responsible for configuring all electronic equipment to provide a fully functioning system which includes opticom, video and/or loop detection as applicable and pedestrian pushbutton configuration. The video detection equipment manufacturer shall provide a technical representative at the intersection during the turn-on and testing period if necessary. The contractor shall also furnish and install all Ethernet cables necessary to connect all IP capable electronic equipment to the IP switch in the cabinet.

DELETE "C" AND "D" OF THIS SUBSECTION AND REPLACE WITH THE FOLLOWING:

C. Traffic signal controllers shall be one of the following:

1. **NAZTEC 980 ATC TS2 Type 2 NTCIP Compliant Signal Controller**.

2. **Eagle M53 controller**.

D. The Contractor shall supply the controller to the City of Las Vegas Traffic Signal Repair Shop, fourteen days prior to signal turn-on, for testing. The Contractor shall deliver the

controller to 2824 E. Charleston Boulevard. Contractor shall notify the Traffic Signal Repair Shop (229-6075) seven days prior to installation.

623 T.02.04 MAGNETIC INDUCTION LOOP DETECTORS

ADD THE FOLLOWING TO "A.1":

The term "loop leads" and "home runs" refers to two (2) conductors from the loop detector in the roadway to pull box. The term "loop lead in" refers to the conductors from the conductors from the pull box to the traffic signal controller cabinet.

DELETE "A.4" AND "A.5" OF THIS SUBSECTION AND REPLACE WITH THE FOLLOWING:

A. 4. Loop leads shall be properly marked in the pull box and the cabinet as to the location and which vehicular phase of the traffic signal is associated with that loop as well as a lettered designation corresponding to the designation shown on the contract drawings. For example, a loop lead for the eastbound thru movement might be labeled as either 4B, 4C, 4D, or 4E.

A. 5. A minimum of 5 feet of loop wire and 5 feet of loop lead-in shall be provided and stored in the pull box for slack.

DELETE "A.7" OF THIS SUBSECTION IN ITS ENTIRETY.

ADD THE FOLLOWING PARAGRAPH TO "B.7." OF THIS SUBSECTION:

B. 7. Preformed loops shall by one of the following manufacturers:

a. Reno A & E,

b. Never-Fail Loop Systems, or

c. Approved equal.

ADD THE FOLLOWING PARAGRAPH TO "B" OF THIS SUBSECTION:

8. *(This installation should be used when pavement is to be milled/overlay or as an alternative installation method for full-depth pavement replacement)*

[When constructing new asphalt concrete pavement] [For milling and overlay pavement operations], preformed loops shall be installed prior to the final lift of pavement in saw cut loop slots made in the dense grade pavement (i.e. prior to the final lift of dense grade asphalt concrete, open grade, or U.T.A.C.S. pavement). There shall be a minimum cover of two inches measured from the bottom of the final finish grade pavement surface to the top of the preformed loop.

When installing loops in existing asphalt concrete or portland cement concrete pavements not being milled or replaced, saw cut slots in the pavement shall be a

minimum of three inches in depth and there shall be a minimum cover of two inches measured from the finish grade pavement surface to the top of the preformed loop.

When constructing new portland cement concrete pavement, preformed loops shall be installed prior to placement of the pavement at the interface between the concrete pavement and base course material.

Sawed slots shall be spaced a minimum of six inches (150 millimeters) apart and shall be blown clean of all loose material and dried prior to the installation of the preformed loop. The preformed loop shall be carefully placed into the saw slot using special tools to avoid inflicting damage to the preformed loop assembly. When more than one loop terminates in a pull box, each loop shall have a separate sawed slot for its leads and leads shall be properly marked as specified below. Loop slots shall be sealed prior to paving. Polymeric sand may be used in lieu of sealant with the approval of the Engineer. The saw cuts shall be blown clean after wire installation and before placement of sealant. The loop lead-in cable shall be as specified below. Each loop system (i.e. advanced detection, left turn movements, thru movements, and right turn movements) shall have at least one separate lead-in to the controller cabinet.

Loop leads shall be properly marked in the pull box and the cabinet as to the location and which vehicular phase of the traffic signal is associated with that loop as well as a lettered designation corresponding to the designation shown on the contract drawings. For example, a loop lead for the eastbound thru movement might be labeled as 4B, 4C, 4D, or 4E. A minimum of five (5) feet of loop wire and five (5) feet of loop lead-in shall be provided and stored in the pull box for slack. All loop wire home run to pull box shall clearly identify the direction of the cables windings for ease of installation.

Loop wire installation shall be tested using a megohmeter both prior to the placement of loop wire sealant, as well as after installation, in the presence of a City representative. Insulation resistance readings shall not be less than 100 megohms at 1000 volts.

DELETE "C" OF THIS SUBSECTION AND REPLACE WITH THE FOLLOWING:

C. Cable-in-Duct System.

1. The loop system shall be wired with a cable-in-duct assembly, defined as No. 12 AWG minimum, meeting IMSA Specification No. 51-5 as indicated in the Standard Drawings, directly installed in sawcut slots.

2. When constructing new asphalt concrete pavement, loop wires shall be installed prior to the final lift of pavement in saw cut loop slots made in the dense grade pavement (i.e. prior to the final lift of A.C.). There shall be a minimum cover of two inches measured from the bottom of the final asphalt concrete surface to the top of the loop.

3. When installing loops in existing asphalt concrete or Portland Cement concrete pavements not being milled or replaced, or in new Portland Cement concrete pavement, saw cut slots in the pavement shall be a minimum of three inches in depth and there shall be a minimum cover of two inches measured from the finish grade pavement surface to the top of the loop.

4. The loop or loops shall be installed in the saw cut slots in the pavement and shall be oriented and color-coded or taped in accordance with the Standard Drawings and plans. Sawed slots shall be blown clean of all loose material and dried. Loop wire shall be carefully placed into slot, avoiding damage to the wire insulation. When more than one loop terminates in a pull box, a maximum of two loop home runs shall be installed per single slot and leads shall be properly marked as specified below. Loop home runs assigned to different signal phases shall not share the same slot with loop home runs for another phase.

5. Sawed slots shall be spaced a minimum of six (6) inches (150 millimeters) apart.

6. Loops slots shall be sealed with detector sealant flush with pavement surface.

7. Each loop system shall have a separate lead-in to the controller cabinet.

8. All loops shall be megohmeter tested.

ADD THE FOLLOWING PARAGRAPHS TO "F" OF THIS SUBSECTION:

Multiple Conductor Loop Lead-In Cable for connection of Multiple Loop Systems:

When multiple conductor loop lead-in cable is specified on the contract drawings, use cable that conforms to the following specifications to connect multiple loop systems to the terminal blocks in the controller cabinet:

1) NEC / (UL) Specification TC or CM, certified for use in underground conduit or as an aerial cable supported by a messenger
2) 18 AWG stranded tinned copper conductors, polypropylene or polyethylene insulation. Six twisted pairs with insulation colors that match table below
3) Each twisted pair individually shielded with an aluminum foil shield that provides 100% coverage and a 20 AWG tinned copper drain wire
4) Outer jacket of polyvinyl chloride (PVC) or polyethylene (PE), cable rated for 300 volts minimum

6-Pair Loop Lead-in Cable Assignments

Pair Number	Color	Phase Letter Designation
1	Black & Red	A
2	Black & White	B
3	Black & Green	C
4	Black & Blue	D

5	Black & Yellow	E
6	Black & Brown	F

REPLACE EACH OF THE FOLLOWING SENTENCES OF "H" OF THIS SUBSECTION WITH THE FOLLOWING:

For Downtown pole mount cabinets, use two shelf mount detector amplifiers with 4 channels per loop detector amplifier.

2. All detectors shall be of the rack mounted type.
9. There shall be 2 channels per each loop detector.

ADD THE FOLLOWING PARAGRAPH TO "H" OF THIS SUBSECTION:

20. Turning off a loop amplifier shall not place a call.

623 T.02.05 EMERGENCY VEHICLE PRIORITY CONTROL SYSTEM (INTERNAL PREEMPTION)

ADD THE FOLLOWING PARAGRAPH TO THIS SUBSECTION:

Optical Preemption units shall be Global Traffic Technologies (GTT) (encoding capable), using a Model 764 phase selector installed in a Model 760 card rack with a Model 768 Auxiliary Interface Panel mounted in the cabinet and fully wired for green sense capabilities. Optical sensors shall be Model 721 and will be interfaced to the traffic signal controller cabinet using an M-138 cable. **No other optical preemption units will be accepted**. This is necessary to facilitate area-wide vehicle encoding.

623 T.02.06 TRAFFIC SIGNAL VIDEO IMAGE DETECTION SYSTEMS

ADD THE FOLLOWING TO THIS SUBSECTION:

A. All cabinets shall be wired for a Video Detection System with appropriate cameras (minimum one per vehicular direction) and cables mounted according to the manufactures specifications for each direction of vehicular travel. The following requirements must be met by the supplier of the equipment:
   1. **All vehicle detection will be by video image detection using either Iteris Edge 2 with Edgeconnect Pac (IP addressable), or Peek Videotrak IQ (with Ethernet port) video detection systems, or TRAFICON VIP 3D.2 with VIEWCOM E MAX+ (IP ADDRESSABLE) in a TRAFFICON detector rack**. The Video Detection System shall be an above ground vehicle detection system that utilizes machine vision when interfaced with standard color CCD cameras to provide complete intersection and roadway detection

   2. A single NEMA certified chassis shall be supplied for each Video Image Detection System, which will allow expandability to provide for a minimum of six camera inputs for vehicle detection. All interface equipment including interface panels, connectors, and cabling shall be provided and wired in the controller cabinet to accommodate a minimum of six camera operation, or as shown on the Contract Drawings.

3. Each Video Detection System will include a minimum of 4 standard color cameras, or as shown on the Contract Drawings. All cameras shall be equipped with adjustable lenses, allowing the user to modify the apparent size of the lens angle. These are also referred to as “zoom lenses”. Each direction/camera shall have a minimum of 24 user programmable detection zones (not lines or “probes”), and include heater, sunshield and mounting brackets. Each camera will have power and video directly from the cabinet. Coaxial cable will be type 8281 (solid center conductor). Camera connections that use a prefabricated cable integrating power and coaxial cable into a single weatherproof connector are acceptable. An in-line filter (CX06-BNCY or equivalent) will be provided for each camera coaxial cable input. The in-line filters will be mounted on a panel (panel to be attached to the inner side wall of the cabinet). “BNC” connectors are the only acceptable termination of coaxial cables. Cameras shall be mounted per the manufacturer’s recommendations and per the CLV Traffic Engineer approval. Cameras shall be mounted using a 72” extension bracket on signal mast arms. Cameras should be centered over the lane line between the left turn lane and the through lane for the approach being detected. The contractor should contact the city Traffic Signal Supervisor prior to mounting cameras for approval of the mounting locations.

4. All delay and extension functions for an approach must be performed within the video unit.

5. The units must be capable of simultaneously detecting all vehicles 300 feet from the stop bars on every approach.

6. The Video Image Detection System shall have an internet protocol (IP) port for remote access capability to transmit video and detector information to a computer. The Video Image Detection System shall have the capability to remotely reconfigure detection zones and transmit video via phone line, twisted pair, coaxial cable and fiber optic interconnect.

7. The Contractor shall provide a fully functioning and programmed system complete with latest version of manufacturer’s software. All software and hardware for installation, operation and maintenance will be supplied to the City along with necessary technical support upon setup, if needed.

8. The Video Detection System shall utilize standard 24 volt logic signal outputs to interface with NEMA TS1/TS2, 170/179, 2070, or other future ATC controllers.

9. The Video Image Detection System must provide logic ground to all detector outputs that shall be active during programming of detection zone layouts.

10. All of the system’s micro-processing functions must be performed in the video unit, which must be located within the controller cabinet.
11. All equipment schematics and technical material must accompany any equipment supplied to the City of Las Vegas Traffic Electrical Field Operations, upon turn-on of the signal.

623 T.02.08 VEHICLE SIGNAL FACES

ADD THE FOLLOWING PARAGRAPH TO "A" OF THIS SUBSECTION:

5. Vehicle signal faces shall be ETL compliant. The ETL Listed Mark indicates that the manufacturer's production site conforms to a range of compliance measures and is subject to periodic follow-up inspections to verify continued conformance, and the product meets the minimum requirements of widely accepted product safety standards as determined through independent testing of a Nationally Recognized Testing Laboratory.

623 T.02.10 PEDESTRIAN SIGNAL FACES

ADD THE FOLLOWING PARAGRAPH TO "A.1" OF THIS SUBSECTION:

All pedestrian signal faces shall provide "Walking Person", "Hand", and "Countdown" messages as provided by **Duralight model #JXM-400-VIEIL** or **Dialight model #430-6479-001X** or approved equal (must be ETL compliant for consideration).

623 T.02.11 PEDESTRIAN PUSH BUTTONS:

DELETE THIS SUBSECTION IN ITS ENTIRITY AND REPLACE WITH THE FOLLOWING:

A. Mounting height of the pedestrian push button shall be 42" above the sidewalk.

B. All pedestrian push buttons **shall be either Campbell Company Advanced Accessible Pedestrian System, part numbers AAPS APB912 (buttons) with AAPS APC (controller), or Polara Navigator 2-Wire System** Audible-Tactile Pedestrian Push Button type, or approved equivalent, in accordance with the request from the Nevada Bureau of Services to the Blind and Visually Impaired. Equivalent systems shall conform to the audible-tactile pedestrian system specifications below.

C. AUDIBLE-TACTILE PEDESTRIAN SYSTEM SPECIFICATIONS

1. GENERAL DESCRIPTION

a) The Audible-Tactile pedestrian system shall consist of all electronic equipment, mounting hardware, power supplies, push buttons, and sign faces, which are designed to provide both a raised vibrating tactile arrow along with a variety of audible sounds for different traffic signal functions. The system shall consist of a Control Unit and Pole Mounting Assembly, as described below. Additionally, documentation shall include shop drawings for all equipment, electronic schematics, required voice setup software/ hardware, and installation/operations manuals.

2. FUNCTIONAL REQUIREMENTS

a) The system shall vibrate the tactile arrow during every time the WALK interval indication is displayed.

b) The system shall have the field-selectable function known as “Locating Beep.” This means that during the Flashing DONT WALK and the DONT WALK intervals, the system shall provide a steady, non changing, (constant dB level) pole locating tone that emanates directly in the vicinity of the Pedestrian Push Button.
c) The system shall have the field-selectable function known as “Extended Push Activation.” This means that the audible WALK message will only be activated and sound during the WALK interval if the button is depressed for a minimum of three (3) seconds. This audible WALK message shall be able to be field set to allow for automatically adjusting to ambient noise levels via control circuitry.
d) The system shall have the function referred to as “Voice Location Message.” This means that the location of the street to cross, and the intersection will be vocalized only when the button is depressed for a minimum of three (3) seconds. This shall be a field-settable option, and the volume shall be automatically adjusted to ambient noise levels
e) The audible messages must be easily programmable by City staff, with the needed hardware and software to be supplied by the system’s vendor.
f) Automatic volume adjustments for ambient noise shall be field selectable.

3. CONTROL UNIT

GENERAL DESCRIPTION
The equipment needed for the Control Unit must be able to be mounted in the Pedestrian Head Housing on the Traffic Signal Pole. It shall be powered from the 120 VAC, WALK/DONT WALK lamp indications in the housing. The unit shall conform to the following specifications.

a) POWER REQUIREMENTS: 115 VAC, 60Hz, (100 ma, typical)
b) Separate power inputs for “WALK” and “DONT WALK”, two ¼ AMP fuses mounted on the board
c) POWER SUPPLIED TO VIBRATOR: 12 VAC, .3A Typical, to operate during WALK interval only
d) AUDIO AMPLIFIER POWER OUTPUT: 10 W RMS into 8 ohms
e) VOLUME CONTROL: On board trimming potentiometer for overall adjustment
f) VOLUME CONTROL AUTOMATIC ADJUSTMENT RANGE: 28 Db
g) MICRPHONE FOR AMBIENT NOISE: Mounts in Pedestrian head housing. Frequency range: 170 Hz to 2.3 Khz
h) PED PUSH BUTTON INTERFACE: Accepts 12 to 24 Volts AC/DC imposed by connection to push button which will be terminated in an existing traffic signal controller cabinet
i) JUMPER SELECTABLE OPTIONS:
   i. Chirp
   ii. Cuckoo
   iii. Walk Message
   iv. Location Message if Available
   v. Extended Push Button Triggering
   vi. Locating Tone

j) MOUNTING: Mounts inside the pedestrian head housing using existing threaded holes in the rear wall on 9 ¼" centers. Designed to clear reflector in standard housing of dual incandescent pedestrian head. Not for use within the older, neon/transformer assemblies. The assembly shall accommodate a standard 9" X 12" pedestrian sign.

k) AUDIBLE LOCATING TONE: 880 Hz plus harmonics, 0.1 second duration, 1 second interval. Operates during flashing DONT WALK and solid DONT WALK indications, only

4. POLE MOUNTING ASSEMBLY

GENERAL DESCRIPTION: This equipment is the part that will be visible to the pedestrians. It is commonly referred to as the "Pedestrian Push Button Assembly." This shall contain the 2" ADA-compliant Pedestrian Push Button, the directional tactile arrow, the weatherproof speaker, and the appropriate informational sign for each location.

a) VIBRATOR POWER: 12 VAC, .3 A Typical
b) SPEAKER: 8 Ohms, 15 Watt maximum, weather-proof
c) PUSH BUTTON: Mounting height of the pedestrian push button shall be 42-inches above the sidewalk

5. MESSAGE MARKING

The Message Sign shall be an R10-3E sign, 9"x12" (size modified), per MUTCD 2009 edition, and shall be porcelain enameled metal.

623 T.02.12 FLASHERS

ADD THE FOLLOWING TO THIS SUBSECTION:

H. Solar Pedestrian Crosswalk Flashing Beacon System

Each system unit shall consist of a solar / battery system, an electronic control module, a wireless communication system to synchronize the flash for multiple system units, and a 12" circular yellow Light Emitting Diode (LED) signal indication and housing. A single unit may include two beacons, one for each direction. The number and configuration of Flashing Beacon units for each Pedestrian Crosswalk shall be as indicated on the contract drawings.

The system units shall be **Carmanah Model R820C Solar powered pedestrian activated flashing beacons**, **JSF Technologies Models AB-2412 (double head)** or **JSF Technologies Models AB-1412 (single head) Pedestrian activated crosswalk beacons,** or approved equal.

Other manufacturer units may be acceptable to the City of Las Vegas that meet or exceed the following specifications:

1. LED Module

a) The lens shall be 12 inches in diameter per latest edition of the MUTCD Section 4D.15
b) LEDs shall be color emitted
c) Lens may be same color or clear
d) LED power peak consumption to be 6 watts

2. Electronic Module

a) Electronics to be housed in a weatherproof metal casing with theft resistant locking hardware
b) Flash pattern and rate shall have multiple patterns with one pattern and rate to meet MUTCD, latest edition, Section 4K.01
c) System shall include energy management system to continuously monitor battery and solar intensity and shall have the ability to increase brightness in sunny conditions and increase longevity in overcast or night time conditions
d) System to continue to operate for a minimum of 30 days, without solar recharging with a set flash rate meeting the MUTCD specified flash pattern

3. Solar Panel Module

a) The solar system shall include one or more solar panels with a total solar collection surface area to be no larger than 16” x 16” for single flashing beacon units
b) Solar panel visibility to be discrete from ground level to reduce theft or threat of vandalism
c) Solar panel collection to be omni-directional as to not be dependent on orientation for maximum collection efficiency

4. Battery Module

a) System shall use commercial available lead-acid, cell batteries that are field replaceable
b) Battery module shall have a battery cooling system
c) Battery housing to be white for heat reflection, if external on flasher unit
d) Battery housing to be theft resistant
e) Battery housing shall have a hinged lid for battery access with theft resistant locking hardware
f) Batteries shall be mechanically secured within the battery housing

5. Flasher Unit

a) Flasher unit to be integrated with no external connected parts
b) Flasher housing to be black in color, or as specified in the Contract Drawings.
c) Flasher unit shall be powder coated cast aluminum
d) Complete flasher unit weight shall not exceed 60 lbs, including batteries
e) Flasher units shall have detachable metal backplates which shall be flat black in color
f) Flasher units shall have metal tunnel visors which shall be flat black in interior color

g) Flasher units shall be equipped with hardware and be capable of mounting to the top of a Clark County Area Standard 1-A pole with a 4.5” O.D. post top collar, or to the side of a Clark County Area Standard streetlight pole Flasher unit shall follow the provisions of the MUTCD, latest edition, Chapter 4K, Flashing Beacons

6. Activation and Operation

a) Each flashing beacon unit or units of a system shall be capable of being activated by a pedestrian push button, and shall operate for a set flash duration upon activation. System shall reset flash duration upon activations that occur mid-cycle. The flash duration shall be user configurable in the field from 5 – 60 seconds, in increments of 5 seconds or less. Each unit shall be able to transmit a wireless activation signal to other flashing beacon units in the system upon pedestrian activation. The wireless technology shall maintain a coordinated flash pattern (either alternating or unison) with all the beacons in the system throughout the duration of the activation

b) System coordination must be repeatable upon testing for at least 50 activations. Both sides must be activated, flash, and stop flashing at the same time consistently

c) System must be able to power and be activated by a compatible pedestrian pushbutton. The button shall be capable of providing an audible tone and/or beep and a visible momentary or latched LED light to notify the user the switch was activated. The pedestrian pushbutton shall be vandal resistant.

7. Environmental Specifications

a) The system shall be able to withstand and operate at temperature extremes of 10 deg F to 165 deg F

b) The system shall be designed and constructed to withstand wind loads in conformance with the requirements of the AASHTO publication, "Standard Specifications for Structural Supports of Highway Signs, Luminaries and Traffic Signals", 4th Edition, with latest interims

c) The electronic circuit board housing, wire harnessing and connectors shall be designed in accordance to IEC International Standard 60529, Ingress Protection IP67 requiring that the enclosure be dust tight and remain completely sealed when immersed in water to a depth of 1 meter for 1 hour

d) The LED Module shall meet the following environmental tests as specified in the ITE Vehicle Traffic Control Signal Heads, Light Emitting Diode (LED) Circular Signal Supplement:
Mechanical vibration: MIL-STD-883
Temperature cycling: MIL-STD-883
Moisture resistance: MIL-STD-810F

8. Warranty

a) The system, including battery pack, solar panel, LED module and all components, shall be guaranteed by the manufacturer for a minimum of three years

b) Warranty shall include all parts of the unit including batteries

623 T.02.13 TRAFFIC SIGNAL POLES:

DELETE PARAGRAPH "A" IN ITS ENTIRETY AND REPLACE WITH THE FOLLOWING:

A. All traffic signal poles shall consist of continuous, tapered round steel pole shaft of the length specified, pole cap, anchor bolt cover, and hand hole covers(s), with the bolts, nuts, and washers necessary to complete the installation of the pole shaft. Multi-sided steel traffic signal poles are not accepted.

DELETE PARAGRAPH "B" IN ITS ENTIRETY AND REPLACE WITH THE FOLLOWING:

B. The traffic signal and luminaire mast arms shall consist of continuous, tapered round steel tubes of the length specified, mast arm end caps and bolts, nuts, and washers necessary to complete the installation of the mast arms. Multi-sided steel traffic signal and luminaire mast arms are not accepted.

DELETE PARAGRAPH "K" IN ITS ENTIRETY AND REPLACE WITH THE FOLLOWING:

K. The pole shafts shall be of round cross section, with a minimum outer diameter at the base as shown in the Uniform Standard Drawings for the type of pole specified, and shall uniformly decrease in diameter at the rate of 0.14 inches per foot of length.

1. Pole shafts shall be straight, with a permissive variation not to exceed ¼ inch for each 10 feet of pole shaft.

   a) A 30-foot pole would have ¾ inch allowable deviation at the midpoint of the pole shaft.
   b) A 20-foot shaft would have a ½ inch allowable deviation.
   c) A 10-foot shaft could deviate a maximum of ¼ inch at the midpoint.

ADD THE FOLLOWING PARAGRAPHS TO THIS SUBSECTION:

W. Tenons

1. The mast arm is to be fabricated with end tenon only. The end tenon shall be factory installed and the remaining tenons shall be fabricated in the field at the locations shown on the plans or as directed by the Traffic Engineer and/or his authorized representative.

2. For tenon fabrication details see Clark County Area Uniform Standard Drawing No. 808 and No. 810.

X. Welds

1. All welding shall conform to AWS D 2.0, "Specification for Welded Highway and Railway Bridges", and to any additional requirements in this subsection.

2. All exposed welds, shall be painted as provided for repairing damaged galvanized surfaces.

3. All welders must be certified by the American Welding Society (AWS) or similar organization in the welding of steel and galvanized steel.

4. All exposed weld joints shall be treated with rust inhibitors (i.e. Chemtrek or equivalent) and shall be painted as provided for repairing damaged galvanized surfaces.

623 T.02.16 INTERNALLY ILLUMINATED STREET NAME SIGNS

REPLACE SENTENCES 3 THROUGH 9 OF PARAGRAPH "C" WITH THE FOLLOWING:

3. Sign lettering shall be as shown on the contract plans and shall conform to the 2009 edition of the M.U.T.C.D.

4. The sign face shall have the compass direction of the location marked in the upper left corner of each sign panel with a 5-inch upper case letter (N, S, E or W).

5. The street name suffix (Street, Way, Blvd., and so forth) shall be displayed in the upper right corner of the sign panel.

6. The street address number of the location shall be shown at the lower right corner in 5-inch upper case letters and numerals.

7. Engineer approval is required for the sign faces prior to fabrication.

ADD THE FOLLOWING PARAGRAPHS TO THIS SUBSECTION:

G. Internally Illuminated street name signs shall be wired to the luminaries photocell for control with No. 10 AWG THW copper stranded wire. In the event there is no luminaire on the traffic signal pole, a 1000 watt photoelectric control shall be mounted on the pole cap.

H. Internally Illuminated street name signs shall be LED and shall be one of the following products, or approved equal:

NUART LIGHTING LED EDGE LIT SERIES with ASTM Type IX retroreflective sheeting, and bandable mounting with L-brackets;

TEMPLE EDGE·LIT 96" Model R409A with ASTM Type IX retroreflective sheeting, and under·hang mast arm mount;
SOUTHERN MANUFACTURING Part No. CP818DTJNNAAD1 with 8' x 18" Double Face Viewable Clean Profile LED; Top Mount, bandable mounting with L- brackets, "L" Adapter, No Photocell, Monarch Black, DG-Reflective / EC Film (Green); **Overall size: 8' x 21"**

ADD THE FOLLOWING SUBSECTION TO THIS SECTION:

623 T.02.19 LUMINAIRE ON SIGNAL POLES

A. Luminaires on all signal poles shall be an approved LED equal to a 400 Watt High Pressure Sodium cutoff luminaire, G.E. M400A, with MC-111 distribution, or other approved LED light to satisfied (HIGH Pedestrian) light level as shown on USC 300.S3.

TABLE 2

REQUIRED ILLUMINANCE VALUES FOR SIGNALIZED INTERSECTIONS

ROADWAY CLASS	R.O.W. WIDTHS	MIN. AVE. ILLUMINANCE BY PEDESTRIAN AREA CLASSIFICATION			SIDEWALK / WALKWAY LIGHTING LEVELS		
		HIGH	MEDIUM	LOW	MIN. AVG. ILLUMINANCE	MIN. ILLUMINANCE	UNIFORMITY AVG./ MIN.
ARTERIAL / ARTERIAL	100' OR GREATER BY 100' OR GREATER BY	3.4 FC	2.6 FC	1.8 FC	2.0 FC	1.0 FC	4:1
ARTERIAL / MAJOR COLLECTOR	100' OR GREATER BY 00' OR GREATER BY	2.9 FC	2.2 FC	1.5 FC	2.0 FC	1.0 FC	4:1
ARTERIAL / MINOR COLLECTOR - RESIDENTIAL	100' OR GREATER BY 79' OR LESS	2.6 FC	2.0 FC	1.3 FC	2.0 FC	1.0 FC	4:1
MAJOR COLLECTOR / MAJOR COLLECTOR	80' - 99' BY 80' - 99'	2.4 FC	1.8 FC	1.2 FC	2.0 FC	1.0 FC	4:1
MAJOR COLLECTOR / RESIDENTIAL	80' - 99' BY 79' OR LESS	2.1 FC	1.6 FC	1.0 FC	2.0 FC	1.0 FC	4:1

B. Special lighting requirements

1. Downtown Centennial area

a) Signal pole luminaires shall be an approved LED equivalent to a Gardco CA22L-LED light, or other approved LED light to satisfied (HIGH Pedestrian) light level as shown on USC 300.S3.

CONSTRUCTION

623 T.03.01 PAINTING

ADD THE FOLLOWING SUBSECTION TO THIS SECTION:

B. Special City of Las Vegas Areas

1. Unless otherwise specified, traffic signal system equipment located within the "special areas" noted below shall be finished with the color as indicated:

   a) Downtown Centennial Plan area: **RAL 6012 "Black Green".**

2. The following signal system components located in the special areas noted above shall be painted accordingly:

   a) Traffic signal pole
   b) Traffic signal mast arm
   c) Traffic signal tenons
   d) Traffic luminaire arm
   e) Traffic signal luminaire head (reference Subsection 623 T.02.19 LUMINAIRE ON SIGNAL POLES of these special provisions)

3. Traffic signal poles, mast arms, luminaire arms and other elements specified to be painted shall be factory finished with a high-build, acrylic polyurethane enamel. Alternatively, a polyester TGIC or urethane polyester powder coat finish may be used. Equipment to be painted/coated shall be prepared and painted per manufacturer's specifications.

4. The traffic signal mast arm shall be delivered with no tenons mounted to the mast arm. After the traffic signal pole foundation is constructed, the tenons shall be fabricated in the field at the locations shown on the plans or as directed by the Traffic Engineer. All welding shall conform to 623 T.02.13 of the CCAUSS and these Special Provisions. After installation of the tenons, the mast arm shall be shop painted and finished to match the traffic signal pole. No brushes or rollers shall be used to apply primers or paint except as approved by the Engineer.

STREET LIGHTING SECTION

623 L.02.03 STREET LIGHTING LUMINAIRES

DELETE THIS SECTION IN ITS ENTIRETY AND REPLACE WITH THE FOLLOWING:

A. The standard luminaire shall be as specified in the Contract Drawings.

Streetlight Luminaires shall be LED and provide light level to meet the requirement as specified on USD 300.S3. For the Cobra head style, the luminaire can be GE EVOLVE LED ROADDWAY SCALABLE SPEC GRAD COBRAHEAD, PHILIPS HADCO LED COBRAD HEAD, or approved equal by the Engineer. Roadway light fixture should be type III distribution. Lighting study will be required.

TABLE 1

REQUIRED ILLUMINANCE VALUES FOR ROADWAYS					
ROADWAY CLASS	R.O.W. WIDTHS	ROADWAY LIGHTING ILLUMINANCE LEVELS		SIDEWALK / WALKWAY ILLUMINANCE LIGHTING LEVELS	
		MIN. AVG.	UNIFORMITY AVG./MIN.	MIN. ILLUMINANCE	UNIFORMITY AVG./ MIN.
ARTERIAL	100' OR GREATER	1.58 FC	3:1	0.2 FC	4:1
MAJOR COLLECTOR	80' TO 99'	0.84 FC	4:1	0.2 FC	4:1
MINOR COLLECTOR	60' TO 79'	0.38 FC	6:1	0.08 FC	6:1
RESIDENTIAL	51' OR LESS	0.38 FC	6:1	0.08 FC	6:1

In DOWNTOWN CENTENNIAL area, all streetlight shall be concrete black pole with single or dual LED lighting (Roadway side 160w led and Pedestrian side lighting 110w led – rotated 180degre). The street light pole can either be the Ameron or Stresscrete - 26'-3" pole. The length of streetlight pedestrian side arm varies with the sidewalk width. For sidewalk of 10' (including amenity zone) – the arm length should be 4'. For 15' sidewalk, the arm length should be 6' and for greater than 15' sidewalk or meandering sidewalk, streetlight arm can be 8' to match the street side lighting. For area where sidewalk meander more than 15' from back of curb, trail lighting maybe required to meet the lighting level. The lighting fixtures are to be the Philips Gardco ROUND 10 – CA22L or other approved equal LED light that will meet the aesthetic and the light level requirement as specified on USD 300.S3. Additionally, for areas where high amounts of pedestrians are anticipated, the light level shall be increased to meet Table 4 of the ANSI/IES RP-8-14 (below). Lighting study will be required. Special foundations for the black concrete pole are also required see below.

TABLE 4 - RECOMMNEDED VALUES FOR HIGH PEDESTRIAN CONFLICT AREAS			
MAINTAINED ILLUMINANCE VALUES FOR WALKWAYS			
	E_{avg} (lux/fc)	Ev_{min}(lux/fc)	E_{avg}/E_{min}*
Mixed Vehicle and Pedestrian	20.0/2.0	10.0/1.0	4.0
Pedestrian Only	10.0/1.0	5.0/0.5	4.0
E_{avg} - minimum maintained average horizontal illuminance at pavement			
E_{min} - minimum horizontal illuminance at pavement			
EV_{min} - minimum vertical lluminance at 1.5m above pavement			
*Horizontal only			

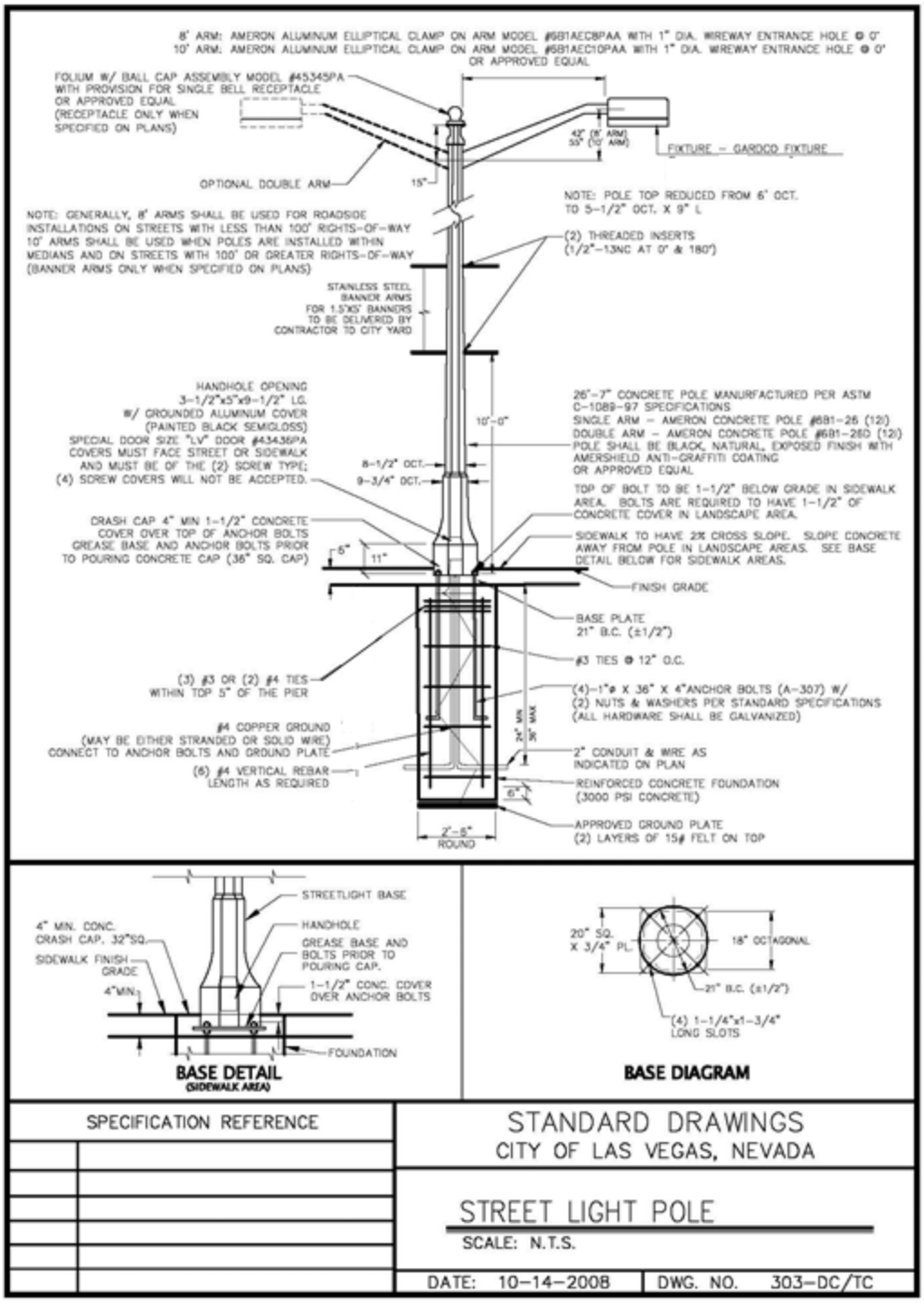
8' ARM: AMERON ALUMINUM ELLIPTICAL CLAMP ON ARM MODEL #6B1AEC8PAA WITH 1" DIA. WIREWAY ENTRANCE HOLE @ 0°
10' ARM: AMERON ALUMINUM ELLIPTICAL CLAMP ON ARM MODEL #6B1AEC10PAA WITH 1" DIA. WIREWAY ENTRANCE HOLE @ 0°
OR APPROVED EQUAL
FOLIUM W/ BALL CAP ASSEMBLY MODEL #45345PA
WITH PROVISION FOR SINGLE BELL RECEPTACLE
OR APPROVED EQUAL
(RECEPTACLE ONLY WHEN
SPECIFIED ON PLANS)
42" (8' ARM)
55" (10' ARM)
FIXTURE – GARDCO FIXTURE
OPTIONAL DOUBLE ARM
15"
NOTE: POLE TOP REDUCED FROM 6" OCT.
TO 5-1/2" OCT. X 9" L
NOTE: GENERALLY, 8' ARMS SHALL BE USED FOR ROADSIDE
INSTALLATIONS ON STREETS WITH LESS THAN 100' RIGHTS-OF-WAY
10' ARMS SHALL BE USED WHEN POLES ARE INSTALLED WITHIN
MEDIANS AND ON STREETS WITH 100' OR GREATER RIGHTS-OF-WAY
(BANNER ARMS ONLY WHEN SPECIFIED ON PLANS)
(2) THREADED INSERTS
(1/2"-13NC AT 0° & 180°)
STAINLESS STEEL
BANNER ARMS
FOR 1.5'X5' BANNERS
TO BE DELIVERED BY
CONTRACTOR TO CITY YARD
HANDHOLE OPENING
3-1/2"x5"x9-1/2" LG.
W/ GROUNDED ALUMINUM COVER
(PAINTED BLACK SEMIGLOSS)
SPECIAL DOOR SIZE "LV" DOOR #43436PA
COVERS MUST FACE STREET OR SIDEWALK
AND MUST BE OF THE (2) SCREW TYPE;
(4) SCREW COVERS WILL NOT BE ACCEPTED.
10'-0"
26'-7" CONCRETE POLE MANUFACTURED PER ASTM
C-1089-97 SPECIFICATIONS
SINGLE ARM – AMERON CONCRETE POLE #6B1-26 (12)
DOUBLE ARM – AMERON CONCRETE POLE #6B1-26D (12)
POLE SHALL BE BLACK, NATURAL, EXPOSED FINISH WITH
AMERSHIELD ANTI-GRAFFITI COATING
OR APPROVED EQUAL
8-1/2" OCT.
9-3/4" OCT.
TOP OF BOLT TO BE 1-1/2" BELOW GRADE IN SIDEWALK
AREA. BOLTS ARE REQUIRED TO HAVE 1-1/2" OF
CONCRETE COVER IN LANDSCAPE AREA.
CRASH CAP 4" MIN 1-1/2" CONCRETE
COVER OVER TOP OF ANCHOR BOLTS
GREASE BASE AND ANCHOR BOLTS PRIOR
TO POURING CONCRETE CAP (36" SQ. CAP)
SIDEWALK TO HAVE 2% CROSS SLOPE. SLOPE CONCRETE
AWAY FROM POLE IN LANDSCAPE AREAS. SEE BASE
DETAIL BELOW FOR SIDEWALK AREAS.
5"
11"
FINISH GRADE
BASE PLATE
21" B.C. (±1/2")
#3 TIES @ 12" O.C.
(3) #3 OR (2) #4 TIES
WITHIN TOP 5" OF THE PIER
(4)-1"ø X 36" X 4"ANCHOR BOLTS (A-307) W/
(2) NUTS & WASHERS PER STANDARD SPECIFICATIONS
(ALL HARDWARE SHALL BE GALVANIZED)
24" MIN
36" MAX
#4 COPPER GROUND
(MAY BE EITHER STRANDED OR SOLID WIRE)
CONNECT TO ANCHOR BOLTS AND GROUND PLATE
2" CONDUIT & WIRE AS
INDICATED ON PLAN
(6) #4 VERTICAL REBAR
LENGTH AS REQUIRED
REINFORCED CONCRETE FOUNDATION
(3000 PSI CONCRETE)
6"
APPROVED GROUND PLATE
(2) LAYERS OF 15# FELT ON TOP
2'-6"
ROUND
STREETLIGHT BASE
4" MIN. CONC.
CRASH CAP. 32"SQ.
HANDHOLE
GREASE BASE AND
BOLTS PRIOR TO
POURING CAP.
SIDEWALK FINISH
GRADE
4"MIN.
1-1/2" CONC. COVER
OVER ANCHOR BOLTS
FOUNDATION
BASE DETAIL
(SIDEWALK AREA)
20" SQ.
X 3/4" PL.
18" OCTAGONAL
21" B.C. (±1/2")
(4) 1-1/4"x1-3/4"
LONG SLOTS
BASE DIAGRAM
SPECIFICATION REFERENCE
STANDARD DRAWINGS
CITY OF LAS VEGAS, NEVADA
STREET LIGHT POLE
SCALE: N.T.S.
DATE: 10-14-2008
DWG. NO. 303-DC/TC

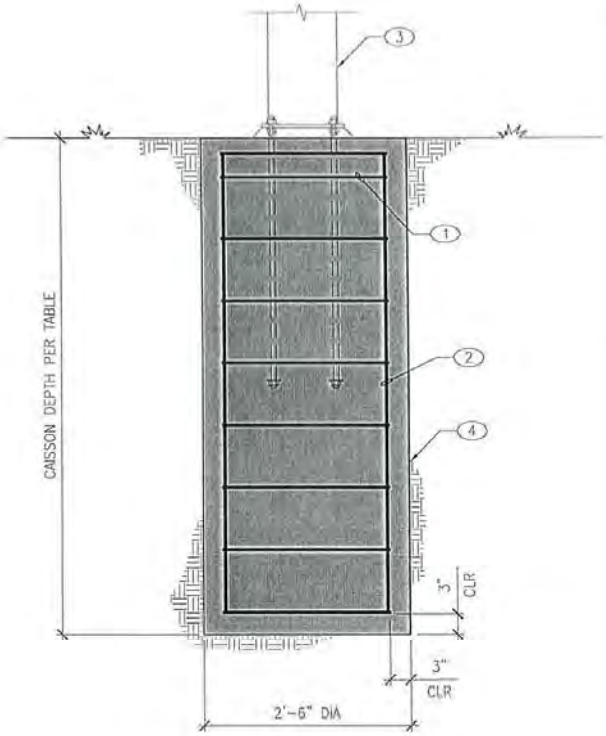

KEYNOTES:

1. (2) #4 TIES IN TOP 6" AND AT 9" O.C. (Fy = 60 KSI)
2. (9) #6 VERTS DISTRIBUTED EVENLY AROUND PERIMETER. (Fy = 60 KSI)
3. LIGHT POLE AND ANCHORAGE BY OTHERS
4. 4500 PSI MIN CONCRETE CAISSON

NOTES:

A. LUMINAIRE EFFECTIVE PROJECTED AREA (E.P.A) = 1.9 FT^2

B. ALL LOADS DETERMINED USING AASHTO STD SPECS FOR STRUCTURAL SUPPORTS FOR HIGHWAY SIGNS, LUMINAIRES, AND TRAFFIC SIGNALS (2009 ED. W/ 2011 INTERIM REVISIONS)

C. ALL POLE BANNER AREAS HAVE BEEN OMITTED FROM THE ANALYSIS. "BREAKAWAY HINGES" SHALL BE USED FOR THE ATTACHMENT OF THE BANNER TO THE POLE.

LIGHT POLE CAISSON DEPTH (AASHTO METHOD)

AMERON LIGHT POLE	BASE SHEAR (KIPS)	BASE MOMENT (K-FT)	SOIL TYPE			
			SAND/GRAVEL ϕ MIN = 30° γ = 110 PCF	STIFF CLAY (COHESION,C=1.0 KSF)	MEDIUM CLAY (COHESION,C=0.600 KSF)	SOFT CLAY (COHESION,C=0.250 KSF)
6B1-21 DUAL 10' ARM	0.67	11.06	4'-8"	5'-6"	7'-4"	9'-6"
6B1-26 SINGLE 12' MAX ARM	0.72	13.23	5'-0"	6'-9"	7'-8"	10'-0"
6B1-26 DUAL 12' MAX ARM	0.88	18.30	5'-6"	7'-3"	8'-4"	11'-0

NOTES:

A. TABLE VALUES REFLECT A 3.0 FACTOR OF SAFETY USED IN THE BROHM'S DRILLED SHAFT DESIGN EQUATIONS.

B. SOIL TYPE SHALL BE DETERMINED BY TAKING UNDISTURBED SAMPLES. PROJECT ENGINEER SHALL DETERMINE NUMBER OF REQUIRED SAMPLES.

PROFESSIONAL ENGINEER - STATE OF NEVADA
GREG A. MEYER
EXP. 12-31-13
CIVIL/ STRUCTURAL
No.015053

LIGHT POLE CAISSON

NO SCALE

JUL 23 2012

ENGINEERING SYSTEM SOLUTIONS
7312 W. CHEYENNE AVE, STE #1
LAS VEGAS, NEVADA 89129
Phone: (702) 616-3107
Fax: (702) 616-3725
www.es2eng.com

PROJECT: LIGHT POLE CAISSON
LAS VEGAS, NV

PROJECT NUMBER: STR12.1026 ASA2

DATE: 7/17/2012

SHEET NUMBER: S1

REVISED PROPOSAL

REV.	DATE	DESCRIPTION	DRN.	APPR.
D	10/02	REDRAWN, ADDED DOOR P/N#, CHG'D TO CLAMPS. & CHG'D TO MOD 8D	M.L.	

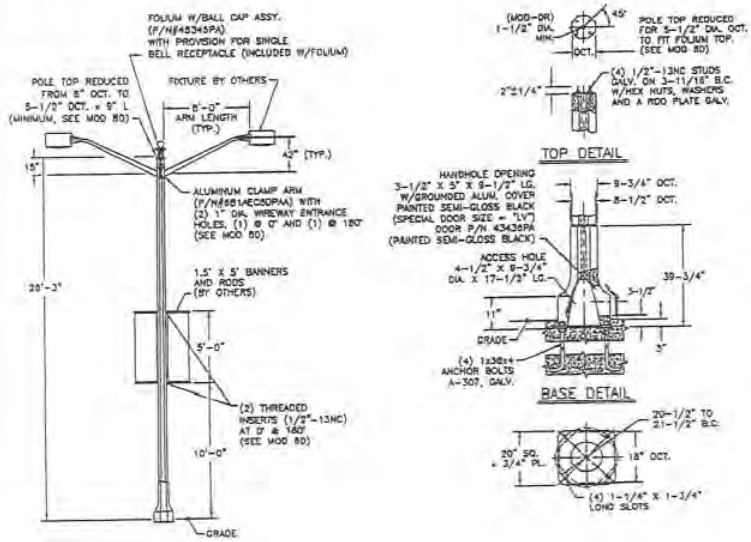

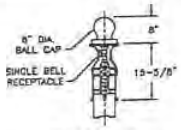

FOLIUM W/BALL CAP DETAIL

( ) POLES REQUIRED, EACH WITH 45345PA & 581AEC5DPAA ASSEMBLIES.

NOTES:
1. CONCRETE MIX (12I): BLACK, NATURAL, EXPOSED FINISH WITH AMERSHIELD ANTI-GRAFFITI COATING.
2. f'c @ 28 DAYS = 6,000 PSI, USING SPUN CYLINDER TEST.
3. f'c @ 28 DAYS = 5,000 PSI, USING ASTM C-31 CYLINDER TEST.
4. POLES MANUFACTURED PER ASTM C-1089-97 SPECIFICATIONS.
5. BASEPLATE ASTM A-36 FULLY PRESTRESSED WITH (8) 5/16" DIA. A-416 WIRES (7-STRAND CABLES).
6. SPECIAL DOOR SIZE = "LV" (DOOR WITH GROUNDING BOLT).
7. MOD DR: DRILL RACEWAY FOR MINIMUM CLEARANCE.
8. MOD 8D: DOUBLE ARM CABLE ENTRANCE, DOUBLE BANNER INSERTS, & REDUCED TOP DIAMETER.
9. DOOR PAINTED SEMI-GLOSS BLACK (PA).

APPROVED BY: DATE

Ameron POLE PRODUCTS & SYSTEMS

PLS – CITY OF LAS VEGAS STANDARDS
6B1-25 (12I) POLE WITH DOUBLE 8' LMA ASSEMBLY

THIS DOCUMENT CONTAINS INFORMATION WHICH IS PROPRIETARY TO AMERON, IT SHALL NOT BE REPRODUCED, USED OR DISCLOSED TO ANYONE WITHOUT THE PRIOR WRITTEN PERMISSION OF AMERON.

DRAWN: G.C.	07/98	SCALE N.T.S.	DWG. NO. SK074598	REV D
CHK'D:				

REV.	DATE	DESCRIPTION	DRN.	APPR.
A	9/02	ADDED DOOR P/N	RS	MJL

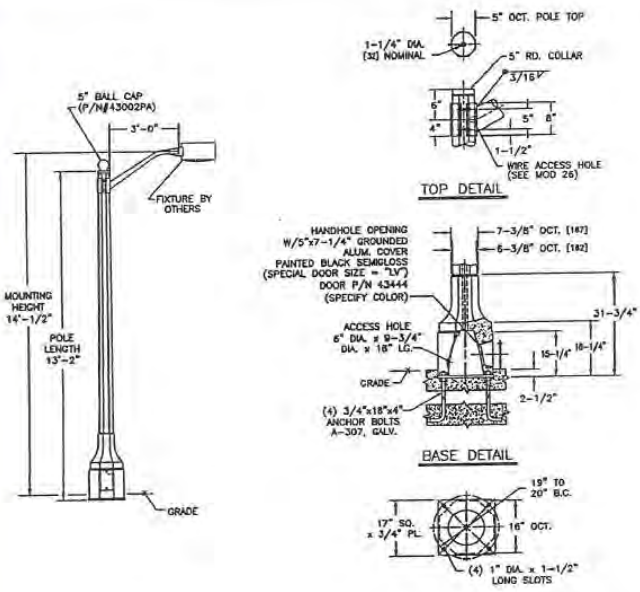

( ) POLES REQUIRED WITH MOAEC3PAA LMA ASSEMBLY.

NOTES:
1. CONCRETE MIX (12I): BLACK, NATURAL, EXPOSED FINISH WITH AMERSHIELD ANTI-GRAFFITI COATING.
2. f'c @ 28 DAYS = 6,000 PSI, USING SPUN CYLINDER TEST.
3. f'c @ 28 DAYS = 5,000 PSI, USING ASTM C-31 CYLINDER TEST.
4. POLES MANUFACTURED PER ASTM C-1089-97 SPECIFICATIONS.
5. BASEPLATE ASTM A-36 FULLY PRESTRESSED WITH (4) 5/16" DIA. A-416 WIRES (7-STRAND CABLES).
6. SPECIAL DOOR SIZE = "LV" (DOOR WITH GROUNDING BOLT).
7. MOD 26: WIRE ACCESS HOLE FOR CLAMP ARM.
8. SPECIFY DOOR COLOR.

APPROVED BY: DATE

Ameron POLE PRODUCTS & SYSTEMS

PLS – CITY OF LAS VEGAS STANDARDS
5B7-13 (12I) POLE WITH 3' LMA ASSEMBLY

THIS DOCUMENT CONTAINS INFORMATION WHICH IS PROPRIETARY TO AMERON, IT SHALL NOT BE REPRODUCED, USED OR DISCLOSED TO ANYONE WITHOUT THE PRIOR WRITTEN PERMISSION OF AMERON.

DRAWN: M.L.	08/02	SCALE N.T.S.	DWG. NO. SK084802	REV A
CHK'D:				

ITEM #16

623 L.03.03 ELECTRICAL TESTING

ADD THE FOLLOWING PARAGRAPH TO THIS SUBSECTION:

B. The Contractor shall be required to submit record drawings prior to any inspections being performed. He and/or his representative shall be present at the project location during the maintaining agency's inspection of the streetlight installation.

END OF SECTION 623

SECTION 628 – TRAFFIC STRIPING, PAVEMENT MARKINGS, AND CURB MARKINGS

DESCRIPTION

628.01.01 GENERAL

ADD THE FOLLOWING TO THIS SUBSECTION:

D. Prior to using any material, the Contractor shall provide the Engineer with a written "Certification of Compliance" from the manufacturer of the material. The certification shall include the manufacturer's name, business address and location of the manufacturing plant. It shall identify the specifications and include one copy. It shall show the quantity of materials supplied for each color, batch number and date of manufacture.

E. Manufacturer's lab test results must be supplied upon request of the Engineer.

MATERIAL

628.02.01 MATERIALS FOR TRAFFIC STRIPING, PAVEMENT MARKING AND CURB MARKING

DELETE PARAGRAPH "E.2" AND REPLACE WITH THE FOLLOWING:

E. 2. If, for any reason, the markings fail to perform as specified, the Contractor, under this warranty, shall completely remove the old markings and apply new markings at no additional cost to the Contracting Agency. Removal shall be by wet sandblasting or other method authorized by the Engineer.

ADD THE FOLLOWING TO THIS SUBSECTION:

F. No pavement marking material shall be used which is not on the Qualified Products Lists (QPL) established by the Nevada Department of Transportation (NDOT) unless otherwise specified.
   1. Liquid Pavement Marking (LPM) shall be either a polyurea or epoxy paint formulation.
   2. Pavement Marking Film shall be Type II from the NDOT QPL

G. The following materials are acceptable for parking lots:
   1. Ennis # 985691 Paint, Traffic RD White
   2. Ennis # 985697 Paint, Traffic RD Yellow
   3. Ennis # 985154 Paint, Traffic RD Red (for Curb)
   4. Vista Paint # 6800 On-Line Semi-Gloss Traffic Marking Paint Blue (for Handicap parking)

H. The following materials shall be used for replacement of the existing green bike lane on Bonneville Avenue, east of Grand Central Parkway only:
   1. Catek, Inc., T-28 Acrylic Based Resin System and Anti-Skid Surfacing

I. All other new green bike lanes constructed with the Project shall be Preformed Thermoplastic Green Bike Lane Material, shall be a minimum thickness of 90 mils (2.29mm), and per the NDOT QPL.

628.03.02 EQUIPMENT

DELETE PARAGRAPH "G" AND REPLACE WITH THE FOLLOWING:

G. Preformed Thermoplastic markings require sealers and the use of a propane torch or radiant heater as recommended by the manufacturer to fuse markings to asphalt and Portland cement concrete pavements by means of heat.

CONSTRUCTION

628.03.04 PREPARATION OF EXISTING SURFACES

ADD THE FOLLOWING TO THIS SUBSECTION:

D. Areas receiving slurry seal will be allowed to fully cure for a minimum of ten (10) days before application of the crosswalks, stop bars, arrows, epoxy or painted bike lanes and symbols and permanent raised pavement markers.

ADD THE FOLLOWING SUBSECTION TO THIS SECTION:

628.03.70 TEMPORARY MARKINGS

A. When otherwise not shown on the plans, detour transitional traffic line striping shall have a minimum taper of 20:1 for temporary striping and 30:1 for permanent striping. Temporary traffic lanes shall be at least ten (10) feet (3 meters) wide and no lane shall encroach within five (5) feet (1.5 meters) of an open excavation or within two (2) feet (0.7 meters) of longitudinal curb.

END OF SECTION 628

SECTION 630 – SANITARY SEWERS

DESCRIPTION

630.01.01 WORK INVOLVED

ADD THE FOLLOWING TO THIS SUBSECTION:

B. This work shall consist of construction of a wastewater collection pipe and sanitary sewer manholes as shown on the Contract Drawings.

C. This work shall also consist of removing and replacement of an existing sewer manhole. In such case, the manhole will be removed in such a manner that the flow of the existing sewer is maintained.

D. This work shall also consist of preparing utility final location information as described on the project drawings and in Section 622 of these Special Provisions.

ADD THE FOLLOWING SUBSECTION TO THIS SECTION:

630.01.70 STANDARDS

A. All sanitary sewer improvements shall be constructed in accordance with the Southern Nevada Design and Construction Standards for Wastewater Collection Systems, most recent edition.

MATERIALS

ADD THE FOLLOWING SUBSECTION TO THIS SECTION:

630.02.02 MANHOLES

E. Cast-in-place and precast manhole bases will be allowed for new construction of sewer pipe.

CONSTRUCTION

ADD THE FOLLOWING SUBSECTION TO THIS SECTION:

630.03.70 MANHOLE ADJUSTMENT

A. When adjusting manholes, all components must be set in a bed of grout: Burke Type V nonmetallic, nonshrink. Burke can be mixed with equal parts of sand and Type V cement for components, but shall be used full strength in pipe inverts.

B. Range of grade ring height allowed for new manhole construction or existing manhole adjustment shall be 0 to 12 inches in accordance with the Design and Construction Standards for Wastewater Collection Systems, Drawing No. SD-5.

C. Class A concrete collars for sanitary sewer manholes shall be constructed in accordance with the Design and Construction Standards for Wastewater Collection Systems, Drawing No. SD-4.

D. When adjusting manholes, Contractor shall install plywood covers in sanitary sewer manhole inverts as well as steel plate covers over manholes (after manhole rings/frames are removed) to prevent debris from entering sewer manholes and corresponding lines. Debris in the manholes shall be removed prior to plywood removal. Plywood and steel covers for manholes shall be installed and removed in the presence of the CITY utilities inspector. All debris dropped into the sewer manholes and corresponding lines shall be retrieved at Contractor's expense. Contractor shall clean (e.g., jet vac or equivalent) the debris out of the affected manholes and/or sewer lines in the presence of the City's representative and approved by the Owner.

END OF SECTION 630

SECTION 699

SITE FURNISHINGS

DESCRIPTION

699.01.01 GENERAL

A. For Local Public Agency Infrastructure along Martin Luther King Boulevard, Grand Central Parkway, Charleston Boulevard, Alta Drive and other City maintained streetscapes, the Design Build Contractor shall follow the design Standards set forth in the City's Downtown Centennial Plan Standards with the exceptions set forth in this Special Provision and/or as shown on the plans.

B. This special provision covers the quality and kind of materials to be used in the installation of:
   1. Street Benches
   2. Trash Receptacles
   3. Bike Racks
   4. Tree Grate
   5. Sidewalk Concrete Finish

MATERIALS

699.02.01 STREET BENCHES

A. Street benches shall meet the requirements of the attached detail herein.

699.02.02 TRASH RECEPTACLES

A. Street benches shall meet the requirements of the attached detail herein.

699.02.03 BIKE RACKS

A. Bike rack shall use "hoop rack" design, be powder coat finish with blue color manufactured by Dero Bike Rack Co., American Bicycle Security Company, or approved equal.

699.02.04 TREE GRATE

A. Tree grates shall follow the City's Downtown Centennial Plan Standards.

699.02.05 SIDEWALK AND ALLEY CONCRETE FINISH

A. Sidewalk panels shall be 5'x5' window pane style gray concrete with broom finish edging.

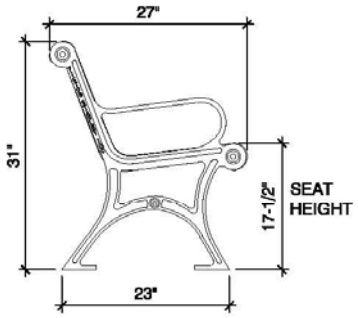

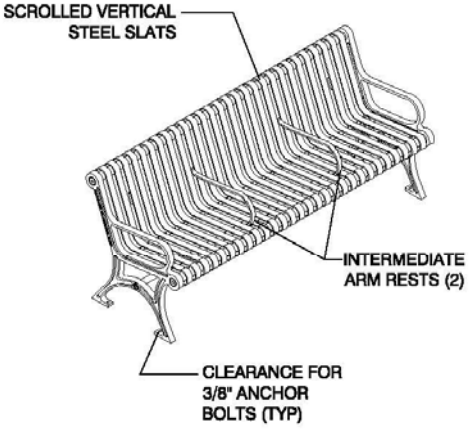

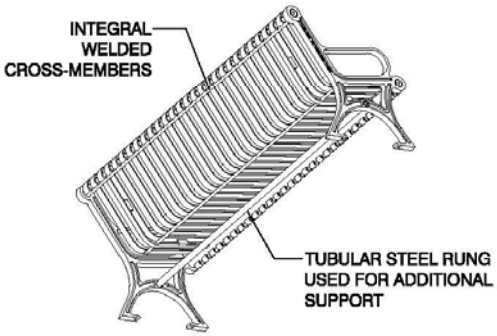

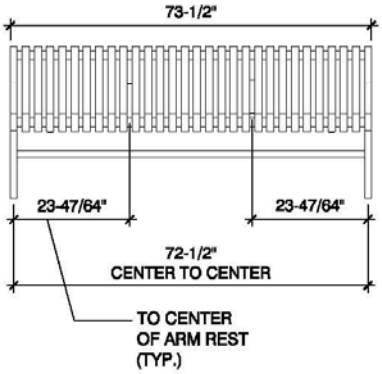

NOTES:

1. ALL FABRICATED METAL COMPONENTS SHALL BE STEEL SHOTBLASTED, ETCHED, PHOSPHATIZED, PREHEATED, AND ELECTROSTATICALLY POWDER-COATED WITH T.G.I.C. POLYESTER POWDER COATINGS. PRODUCTS SHALL BE FULLY CLEANED AND PRETREATED, PREHEATED AND COATED WHILE HOT TO FILL CREVICES AND BUILD COATING FILM. COATED PARTS SHALL THEN BE FULLY CURED TO COATING MANUFACTURER'S SPECIFICATIONS. THE THICKNESS OF THE RESULTING FINISH COAT AVERAGES 8-10 MILS.
2. IT IS NOT RECOMMENDED TO LOCATE ANCHOR BOLTS UNTIL BENCH IS IN PLACE. PERMANENTLY AFFIX TO THE GROUND. CONSULT YOUR LOCAL CODES FOR REGULATIONS.
3. ANCHOR BOLTS TO BE PROVIDED BY CONTRACTOR.

N.T.S.

F:\PW_ENG_DESIGN\DESIGN\DESIGN\CENTENNIAL STANDARDS\DWG\FOR GINA\DOWNTOWN_STEEL_BENCH.DWG

12/16/14

DEPARTMENT OF PUBLIC WORKS CAPITAL PROJECT MANAGEMENT DATE: DEC 2014 DRAWN BY: BP SHEET: 1 OF 1	CITY OF LAS VEGAS STANDARD DRAWING DOWNTOWN STEEL BENCH

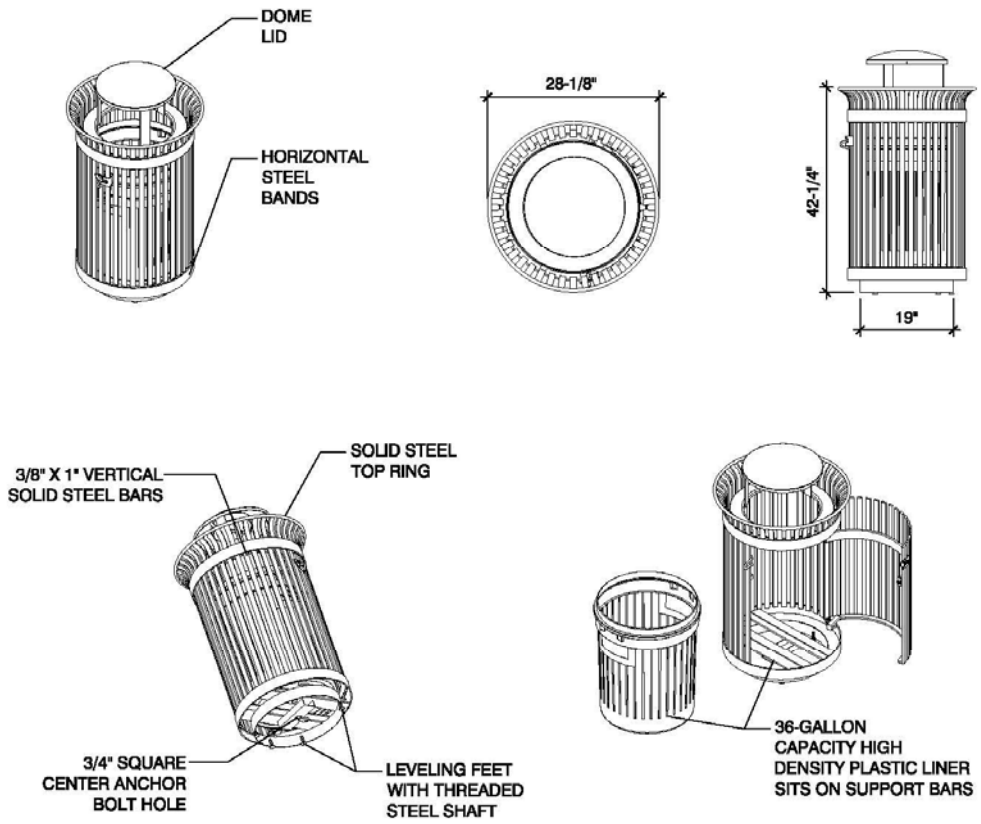

NOTES:

1. ALL FABRICATED METAL COMPONENTS SHALL BE STEEL SHOTBLASTED, ETCHED, PHOSPHATIZED, PREHEATED, AND ELECTROSTATICALLY POWDER-COATED WITH T.G.I.C. POLYESTER POWDER COATINGS. PRODUCTS SHALL BE FULLY CLEANED AND PRETREATED, PREHEATED AND COATED WHILE HOT TO FILL CREVICES AND BUILD FILM COATING. COATED PARTS SHALL THEN BE FULLY CURED TO COATING MANUFACTURER'S SPECIFICATIONS. THE THICKNESS OF THE RESULTING FINISH AVERAGES 8-10 MILS.
2. OIL IMPREGNATED BRONZE BUSHINGS AND STAINLESS STEEL PIVOT PINS FOR DOOR MOVEMENT, STAINLESS STEEL KEYED LOCK ASSEMBLY.
3. PERMANENTLY AFFIX TO THE GROUND PER MANUFACTURER'S INSTRUCTIONS. CONSULT YOUR LOCAL CODES FOR REGULATIONS.
4. PROVIDE PLASTIC INNER LINER MANUFACTURED BY TRASH RECEPTACLE MANUFACTURER.
5. CONTRACTOR SHALL PROVIDE ANCHOR BOLT.

N.T.S.

DEPARTMENT OF PUBLIC WORKS CAPITAL PROJECT MANAGEMENT DATE: DEC 2014 DRAWN BY: BP SHEET: 1 OF 1	**CITY OF LAS VEGAS** **STANDARD DRAWING** **DOWNTOWN** **STEEL TRASH RECEPTACLE**

F:\PW_ENG_DESIGN\DESIGN\DESIGN\CENTENNIAL STANDARDS\DWG\FOR GINA\DOWNTOWN_STEEL_BENCH.DWG

12/16/14

END OF SECTION 699

32 80 00 Irrigation

Irrigation. Design irrigation systems, drainage, and turf layouts to prevent water from:
1. Staining, spotting, or otherwise creating a noticeable pattern on adjacent materials.
2. Causing deterioration of adjacent surfaces.
3. Draining through or over surfaces including all sporting and play activity surfaces.

Irrigation Period. Provide sufficient capacity and pressure to irrigate all turf areas during a 6-hour water window. (Drip irrigation may extend beyond this period if necessary)

Irrigation Water Audit. Include a landscape audit in the specifications if the design contains more than 1,000 square feet of turf. Include in the Construction Documents a requirement that the audit be conducted in the presence of the Owner's parks representative and approved by the Owner prior to the installation of any turf.

> All overhead-irrigated landscape areas shall have a Landscape Irrigation Audit performed by a Certified Landscape Irrigation Auditor, certified and in good standing with the Irrigation Association (IA). The auditor shall be independent of the property owner and all contractors associated with the project. The audits will be conducted in accordance with the current edition of the IA's Landscape Irrigation Auditor's handbook. The minimum efficiency requirements to meet in the audit are 65% distribution uniformity for all fixed spray systems and 70% distribution uniformity for all rotary systems. The results of the audit shall be provided to the Owner in a report acceptable to the Owner and shall be signed by the Auditor. The report shall include controller number and location, station numbers, station locations, sprinkler head locations and distance between sprinkler heads, pressure reading per station, catch device readings and locations, distribution uniformity for individual stations, precipitation rates per station, and a 12 month irrigation schedule (runtimes per cycle, cycles per day, and days per week for each station). Compliance with this provision is required before the Owner will issue Final Payment to the Contractor.

Rain Bird Rewards Program. Insert the following language into the irrigation specification:
The City of Las Vegas currently participates in the Maxicom Dollars Program. Under this rewards program, the City receives Maxicom Dollars for all Rain Bird products/components purchased for installation on City facilities, streetscapes and parks by its contractors/subcontractors. All invoices showing proof of purchase of Rain Bird products/components must be submitted to by the Contractor or landscape subcontractor to an Authorized Rain Bird Distributor (Horizon Distributors, 4224 Wynn Rd., 362-4224, formerly Turf Equipment Supply Company) on behalf of the City for acceptance of rewards. Purchases must be submitted within the same calendar year that the products listed are purchased. The Contractor or landscape subcontractor must submit a written receipt of confirmation from distributor that the guidelines for the program were followed and credits for rewards were issued to the City of Las Vegas, before the City will issue Final Payment to the Contractor. Failure of the Contractor to comply with this program will result in a reduction in the Contract Sum due the Contractor equal to 5% of value of all Rain Bird products used on the Project.

Point of Connection. Size of Service shall vary based upon the system requirements and demands. It is highly recommended that the size of the meter and mainline be sized adequately to run multiple valves concurrently. (See Irrigation Period Above) Refer to the Las Vegas Valley Water District's Uniform Design Standards for Water Distribution System Plate Numbers for installation. Review each site individually for adherence to a six-hour water window and future expansion.

RPPA/Backflow Preventor. Size of Reduced Pressure Principle Assembly/Backflow Preventor shall vary based upon the system requirements and demands. It is highly recommended that the RPPA/Backflow Preventor be sized adequately to run multiple valves concurrently. (See Irrigation Period Above) Refer to

the Las Vegas Valley Water District's Uniform Design Standards for Water Distribution System Plate Numbers for installation. Install all Reduced Pressure Principle Assembly/Backflow Preventor's upstream of the pump station.

In addition to the RPPAs required at the water meter connection locations, install on-site RPPAs upstream of any irrigation pumps to isolate the irrigation system from on-site potable water systems including water features, splash pads, pools, drinking fountains, and buildings. Do not use pressure vacuum breakers, double check valve assemblies or other less stringent methods of isolation for this purpose even if allowed by code. Double check vale assemblies are acceptable for hose connections to the potable water system.

If one water meter and RPPA is used for both irrigation and potable systems, it must be "upsized" to compensate for the two RPPAs that would otherwise be required.

Master Valve. Do not install master valves for parks.

Flow Sensor. Data Industrial IR-220B flow sensor, Smith-Blair model 315 service saddle (or approved equal) with 2" NPT tap for pipe connection. Install flow sensor in concrete valve box with metal lid. Flow sensor shall be installed in a straight run section of pipe, with 10 times pipe diameter upstream and 5 times pipe diameter downstream of the flow meter to achieve proper flow regime. Wire to output decoder installed in CCU per manufacturer's recommendations. Pump station to have GMP display built in.

Sensor Cable. Belden Model 9883, as recommended by the flow sensor manufacturer from the control system pulsed decoder to the flow senor.

Decoder. Data Industrial Model 600-15 Pulse Output transmitter and Rain Bird Pulse Decoder. Install per manufacturer's requirements.

Booster Pump. Link to typical setup.

General Note. Provide adequate clearance for Owner's personnel to perform required maintenance.

General Requirements. Prefabricated pumping station, completely piped, wired, hydraulically and electrically tested on a structural steel skid before shipment to the job site. All components of the pumping system shall be designed to function in an outdoor environment exposed to all the elements. Furnish protective enclosure and cover as required for proper operation of the system. Pump station shall include skid assembly to support all components as the installed mounting base. Base shall be of sufficient size and strength to resist twisting and bending from hydraulic force and support the full weight of the pump and motor. Pump station manufacturer shall provide a factory-trained technician to supervise the installation of the pump station, pumps, and motors. Provide a minimum of one-day of training for Owner's staff in the operation, maintenance and programming of the system. Pump station components shall be supplied by and be the responsibility of one manufacturer, even though some components made are manufactured by others. Provide alternating starts for systems with two or more pump motors.

PSI shall be regulated by the use of variable frequency drives (VFD) or full size pressure reducing/sustaining valves (PRV, Clay or Bermad are acceptable.

Variable Frequency Drives. VFDs should be considered for pumps that are both:

- Used more than 1,000 hours per year, and
- 5 Horsepower or larger.
- Rated to 50° C
- Furnish a variable frequency drive that is IGBT based with selectable carrier frequency up to 15kHz. The VFD shall include terminals for incoming power, motor output power, and control terminals.

- The VFD shall generate a sine-coded, variable voltage / frequency, three phase output for optimum speed control. The VFD shall incorporate power loss ride-through for a minimum of two seconds. VFD protective features shall include current limit, short circuit protection, electronic motor overload protection, and ground fault protection.
- The VFD shall be protected on the primary side by fuses of the appropriate amperage.

  VFDs may be used for smaller less used pumps if the designer can demonstrate to the city that the advantages of a VFD for the application (power savings, soft starts and stops, future flow changes, single phase power use) outweighs the added cost. The designer is responsible to calculate that the life-cycle cost of the VFD is less than a PRV for the application.

  Pump stations with less than 60 psi N.P.S. shall have secondary means of pressure regulation when primary means are VFD. If over 60 psi, a full main size bypass is required.

Select VFD pumps and motors that require:

-
- Motor lead lengths within the manufacturer's recommendation (critical for smaller motors).
- A motor that is specifically designed for VFD applications (voltage spike insulation). Avoid 460V standard motors especially under 10 HP (230V standard motors may be acceptable).
- NEMA MG-1-1993, Part 31.40.4.2 (peak voltage of 1600 volts and a minimal rise time of 0.1 microseconds for motors rated less than 600 volts) when utilizing Insulated Gate Bipolar Transistors (IGBTs).

Pump Walled Enclosures. To be avoided, see Section 01 00 30 Park Design.

Acceptable Pump Manufacturers

Watertronics, 525 E Industrial Drive, Hartland, Wisconsin, 53029, 262-367-5000

Xylem Flowtronex Pumping Systems, 10661 Newkirk Street, Dallas, Texas 75220, 469-221-1200

Or Owner's approved equal

Pumps. Pumps shall be electric motor driven, close coupled, horizontal centrifugal with a self-adjusting type mechanical shaft seal. Pump and motor shall be constructed so that the motor and entire rotating element can be removed from the casing without disturbing the piping. All pump flanges shall have 150 PSI rating. Pump casing shall be constructed from cast or ductile iron. The impeller shall be enclosed, single piece bronze casting, completely machined on all outside surfaces, and statically balanced at the time of pump assembly. The impeller shall be keyed to the shaft and securely fastened. Bearings shall be roller or ball type of sufficient size to withstand the radial and axial thrust loads incurred during service. Shaft shall be stress-proof steel accurately machined and polished to transmit full fiver output. Shafts shall be protected by a renewable shaft sleeve. The coupling shall be designed to transmit full horsepower and torque load. Pump skid/base shall be of sufficient size and strength to resist twisting and bending from hydraulic forces and support the full weight of pumps and motors. Manufacturer shall provide and furnish performance data for the pumps.

Motors. Pump motors shall be squirrel cage induction horizontal solid shaft type. The temperature rise of the motor shall be to NEMA standard MG-1.12.42 for class B or class F insulation. Motors shall be inverter duty rated for continuous operation with a variable frequency drive controller. Furnish motors wired shall be capable of full voltage as required by local regulations. Motors shall be of proper size to drive the pump at any point on its operation curve without exceeding motor horsepower rating. Motors shall be manufactured under NEMA standards, or an approved equal.

Piping. Pump piping shall conform to ASTM specifications A53 for Grade B welded or seamless pipe. All piping shall be Schedule 40. All welding flanges shall be forged steel with slip-on or welding neck type. All welding fittings shall be seamless, conforming to ASTM specification A234, with pressure rating not less than 150 PSI. All piping shall include vitaloc and ductile iron flange piping. Intake Piping: Furnish intake lines for all pumps constructed and fabricated from Schedule 40 carbon steel pipe, and equipped with isolation valves at each pump.

Dogleg Piping: Coat interior of all pump station dogleg drop piping using Scotch Kote 134 or equal fusion bonded epoxy coating prior to shipment of the skid. Apply coal tar epoxy coating and install polyethylene encasement (polywrap) on all steel piping below grade.

Electronic Ball Valves. Pump station manufacturer shall provide a simple switch by-pass back-up mode for constant pressure regulation in the event of VFD failure. The back-up mode shall automatically function on the fly during an event of a VFD failure, without loss of irrigation. The VFD back–up mode must provide constant pressure at variable flow without causing line surge. Utilizing the pressure relief valve is not an acceptable automatic back up mode due to its inability to provide surge free constant pressure regulation at variable flow demand. The automatic VFD by-pass mode shall be either controlled hydraulically through a pressure-regulating valve per pump or EBV (electronic butterfly valve(s).

The pump station discharge pressure shall be regulated to provide surge-free constant pressure as programmed via the control panel operator interface. Discharge pressure shall be regulated by an Electronic Butterfly Valve, consisting of the following:

a. Gradual entry of water from the EBV pump into the discharge manifold to allow for complete purging of pump column air and elimination of surges.

b. Maintain programmed downstream pressure regardless of discharge flow.

c. Up to six, user adjustable PID control settings to ensure accurate pressure regulation at all flows, programmed pressure, or connected pump combination.

d. Adjustable pressure ramp-up and ramp-down to assure surge free pressure regulation.

e. After a drop in pressure, gradually increase system pressure over a user adjustable period of time to eliminate surging.

f. Rate of change of pressure control to anticipate and eliminate rapid pressure changes caused by changing system demand.

Adjustment of regulated downstream pressure shall be accomplished though the control panel operator interface. Individual pressure regulating valves shall be butterfly type with electric motor gear actuation. The maximum allowable pressure drop across the butterfly valve at full pump capacity shall not exceed one PSI. The Butterfly Valve shall be rated for not less than 285 PSI.

Drain Valves. Drain valves shall be provided at all low points in the system. Drain relief valves shall be piped to the outside of the pump enclosure, so that no water drains on the deck floor/skid plate.

Check Valves. Pump check valves shall be silent operating, non-slam type, cast iron bodied with bronze and stainless steel trim. Sealing surfaces shall utilize resilient Buna-N rubber. The valve design shall incorporate a center guided, spring loaded poppet, guided at opposite ends and having a short linear stroke that generates a flow area equal to the pipe diameter. Valves shall be sized to permit full pump capacity to discharge through them without exceeding a pressure drop of 2.5 PSI. Furnish check valves on the discharge of each pump.

Isolation Valves. Valves shall be butterfly type with the position lever or gear hand wheels and rated at 200 PSI working pressure. Trim shall include stainless steel stem, bronze streamlined disc, and full faces resilient seat. Isolation valves shall be installed on each pump inlet and outlet and on the discharge manifold.

Pump Bypass. Furnish pump bypass piping to operate the system for quick coupler requirements or in the event of power failure. Bypass shall be sized to full main line diameter with positive closing gate valve accessibility.

Gauges. Provide pressure gauges at appropriate location to read inlet pressure and discharge manifold pressure. Gauges shall be liquid filled, at least 2.5” in diameter, constructed with a stainless steel case, brass or bronze internals, and are vibration/pulsation dampened. Furnish ball valves installed below each gauge to provide total isolation of pressure gauges.

Electrical Enclosures. The electrical controls shall be mounted in a self contained NEMA 4 enclosure fabricated from not less than 12 gauge steel. Door gasket seals shall be neoprene sponge, sufficient to protect interior components from weather and dust. Door panels shall be constructed from 12-gauge steel with integral locking screws and latches. Operating handle for power disconnect shall be provided on the front of the panel. All external-operating devices shall be dust and weatherproof. All internal components of the enclosure shall be mounted on removable back panels. Mounting screws for components shall not be tapped in the panel enclosure. All internal wiring within, and interconnecting between, the panels shall be complete and no field wiring within the panels shall be required. Wiring troughs and cables raceways shall be self-contained within the enclosure and no external cable trays or wiring troughs are permitted. No pressure gauges, pressure switches, water activated devices, or water lines of any sort shall be installed in any electrical control panel.

Pump Motor Starters, Disconnect and Electrical Switch Gear. Pump motor starters shall be contained within a single NEMA 12 enclosure with a single access door and main disconnect. Each starter shall be protected on each power leg by a time delay fuse of the appropriate amperage. Motor starter coils shall be 240-460 volt operated. Overload relays shall be ambient-compensating type installed on each power leg and shall be set to trip at 105% of motor full-load current rating.

Master Control and Display Panel. Master control and display panel shall be NEMA 4 enclosure separate from the high voltage control panel and fabricated from not less than 12 gauge steel and equipped with a gasketed enclosure door. The incoming power shall be isolated by means of a circuit breaker or fused disconnect. The controller shall receive inputs from a flow sensor and pressure transducer and the 24 volt pump station relay located on the discharge manifold. Pump starting circuits, time delay circuits, stations safety shutdown circuits and any optional equipment control circuits shall have an operating voltage not exceeding 120 volts. All time delay control relays shall be plug-in type for easy replacement. The control panel shall be equipped with the following switches and displays: Manual on/off auto selector switches with green and red indicator lamps, individual pump elapsed time hour meters, digital LED discharge pressure display. Data flow industrial controller shall provide GPM information and Low/No flow emergency shut down.

Skid Wiring. Wiring from control panels to motors shall be in liquid-tight conduit with copper conductor rated not less than 600 volts AC and of proper size to carry the full load amperage of the motors without exceeding 70% capacity of the conductor. A grounding cable shall be included in the liquid-tight conduit. There shall be no splices between the motor starters and the motor connection boxes. Provide multi-conductor shielded cable suitable for Class II low voltage controls for wiring to flow sensors, and pressure transducers. Wiring should be rated for direct burial.
All wiring shall conform to the National Electrical Code Standards. Flexible conduit sections shall be under 5' in length to meet code. All conduit to devices shall be attached securely to avoid trip hazards.

Lighting Arrestor. Main power supply feeding the pumping station shall be equipped with a 3 phase secondary lighting arrestor having a breakdown current rating of not less than 60,000 amps at 14,000 volts discharge. Power supplies, 300 volts and less, shall use 300 volt rated arrestor with 800-volt spark-over voltage. Power supplies 301-600 volts shall use 600 volt rated arrestors with a 1,000-volt spark-over voltage.

VFD Cooling fan. Sized to cool the VFD to a minimum of 50C.

Heater. 3Kw skid mounted thermostatically controlled. Steel housing, phased wiring to match pump drive, meets all UL, NEC and OSHA requirements.

Misc. Electrical Components. A three-pole main station disconnect shall be mounted in a separate NEMA 12 enclosure to completely isolate the electrical system from incoming power. The disconnect shall conform to the requirements of the NEC and applicable local codes. The disconnect shall have an operating handle on the front of the panel. Single-pole secondary distribution fuses with appropriate ratings shall supply power to each pump starter coil circuit, the control system, and to other circuits as specified. Each pump motor starter shall be equipped with an elapse time meter reading up to 999.9 hours in tenths of hours. The meter shall be installed in the electrical control cabinet. Corrosion inhibiting modules shall be installed in all electrical enclosures in accordance with the manufacturer's recommendations. The station shall be equipped with the following alarms: Low voltage safety shutdown, low discharge pressure safety shutdown, high discharge pressure safety shutdown, high temperature safety shutdown, starter failure cutout and VFD fault and bypass. Provide three phase monitors.

Standards. All wiring shall conform to the National Electrical Code Standards. Flexible conduit sections shall be less than 5' in length to meet code. All conduit devices shall be attached securely to avoid trip hazards. All controls and electrical equipment shall be thoroughly inspected and tested before shipment.

Pressure Transducer. Provide a solid-state pressure transducer to provide a noise free, linear output proportional to discharge pressure. Transducer shall be solid-state, strain gauge type with integral voltage regulating and output accuracy not less than .25%. Transducer shall be constructed of stainless steel and rated for the maximum pump station discharge pressure.

Flow Sensor. The pump station discharge manifold shall incorporate an insertion type, pulse frequency output flow sensor for continuous output to the pump station controls. Flow sensor output pulse shall be conditioned and fed directly to the PLC interrupt input for conversion and display in gallons per minute. For accuracy and security considerations, conversion to an analog signal prior to PLC input shall not be accepted. Flow sensor accuracy shall be no less than 2% for flow velocities ranging from 1-30 feet per second. Provide an optical isolator board, Rain Bird decoder, and two terminal connections for flow sensor reading by the irrigation controller.

Painting. Paint of the entire pump station shall consist of a multi-step coating system that includes metal preparation, rust inhibitive prime coat, and a two part polyurethane finish having a total dry film thickness of not les than 4 mils. Paint with manufacturer's standard colors. All electrical enclosures, tanks and accessory panels shall be painted to a minimum thickness of 3 mils and baked at 160-10 F. No exposed aluminum will be permitted.

Operation. Operation:
The pump station shall have two operating points.
When water is being supplied to the irrigation system from the lake and vertical turbine pumping system, the booster pumping system will be programmed not to operate.
When the municipal (potable) water service is connected to the booster pump and supplying water directly to the irrigation system the booster pump operation point shall be as shown on the drawings.
The pump station controls shall provide automatic pressure regulation based on variable flow. The controls shall be capable of changing the regulated downstream pressure while in operation based on flow or a discrete input signal.
The pump system controls shall be capable of up to six user adjustable pressure regulation set points based on flow or one additional set point based on a discrete input.
In addition to adjustment of downstream pressure, the controls shall be capable of up to six pressure regulation algorithms to insure accurate pressure regulation regardless of the regulated pressure or discharge flow.

Valve Locations. Locate all valves outside of asphalt and concrete surfaces.

Gate/Isolation Valves. Provide gate/isolation valves so that open space areas/fields can be shut down without interrupting service to remaining areas.

- For gate/isolation valve 2” and greater, install resilient wedge model gate valve conforming to AWWA C-509 standards. Valve shall be equipped with square operating nut. Nominal size of gate/isolation valve shall match mainline size.
- For gate/isolation valve on lines less than 2”, install threaded bronze gate/isolation valve with solid wedge, non-rising stem, Nibco T113 or approved equal. Nominal size of gate/isolation valve shall match mainline size.
- For valves located more than 2 feet below grade, install no valves less than 2” in size regardless of pipe size, with square operating nut.
- Install gate/isolation valve above grade in pump enclosure or bury below grade in round concrete valve box with metal lid. 6 Inch PVC class 200 sleeve, length as required, shall be installed from the gate/isolation valve (mainline) up to within 2 inches of the valve box lid per provided detail.

Quick Coupler Valves. Rain Bird 44 NP, 1”, 30 GPM. Contractor shall provide 44K, 1”, Corresponding Valve Key and SH-1, 1”, Hose Swivel. Provide one set of Key and Hose Swivel to the Owner’s maintenance staff for each five quick coupler installed. Install quick coupler valve, including filling the valve box with concrete, per provided detail.

Sports Fields Quick Couplers. Connect quick couplers at sports fields to not less than 1-1/2” PVC line size and at least one isolation valve per sports field quick coupler feed.

Ball/Flush Valve. Schedule 80 PVC Ball Valve with ABS handle shall be installed at all Remote Control/Drip Valve Assembly locations and in all piping under pressure (mainline). Schedule 40 PVC Ball Valve with ABS handle shall be installed at all flush valve locations (lateral/drip).

Automatic Control Valve. Rain Bird Electric Remote-Control Valve PEB-Series, 100 for 1” line and 200 for 2” line. Install below grade in pre-cast concrete valve box with metal lid. Valve shall be numbered with Christy identification tag (T. Christy Enterprises, Inc., Anaheim, CA). Install automatic control valve per provided detail including Schedule 80 PVC ball valve and fittings.

Automatic Control Valve with Drip Assembly. Rain Bird Electric Remote-Control Valve 100-PEB Series, Rain Bird Wye Filter RBY-100-200MX, Rain Bird Pressure Regulator PSI-M30X-100. Install automatic control valve with drip assembly below grade in pre-cast concrete jumbo valve box (25” x 15” minimum size) with metal lid. Install automatic control valve with drip assembly per provided detail including Schedule 80 PVC ball valve and fittings.

Concrete Valve Boxes. Pre-cast concrete rectangular valve box with metal lids, size adequately to house valve, plus components. For control valve with drip assembly, jumbo valve box with metal lid is required. For quick coupler or drip lateral flush valves, a 10" round concrete valve box with a round metal lid is required. Turf and drip valve boxes shall be installed level, lined-up, flush with grade in planting areas where possible. Valve boxes shall not be placed in sports playing fields.

The designer is to verify with the Owner whether locks are to be specified on valve boxes when located in the right-of-way. Locks on valve boxes are not required in parks.

Site Satellite Controller. Rain Bird ESP-Site Satellite Controller. This controller combines all features of the ESP-Sat Controller and the Cluster Control Unit (CCU) into one. The control unit shall be stainless steel, pedestal mount. This control unit shall be used on small sites, when one satellite/CCU is required. Communication from the central computer shall be hardwire when possible. Contractor shall install 1" conduit with pull-string from telephone terminal board (TTB) location to the control unit. Electrical requirements for operation are 120 VAC with toggle disconnect/switch. Provide 1" conduit with pull-string from the electrical service panel to the control unit. Provide 1" conduit with pull-string from the site satellites to the pump. Label each station on the controller lid with waterproof card and provide waterproof reduced color-coded site plan complete with station identification.

Cluster Control Unit (CCU). Rain Bird Cluster Control Unit (CCU). The CCU is the interface between the central control and the field satellites for the Maxicom^2 system. The unit shall be stainless steel, pedestal mount, located adjacent too, and in-line with the field satellites when grouped together. Size shall vary based upon the number of field satellites required for the project. Contractor shall install 1" conduit with communication wire from telephone terminal board (TTB) location to the CCU. Communication from the central computer shall be hardwired rather than cell phone whenever possible. Install 1" conduit with maxi wire between the CCU and the field satellites. Electrical requirements for operation are 120 VAC with toggle disconnect/switch. Provide 1" conduit with pull string from the electrical service panel to the CCU and 1" conduit with pull string from the CCU to the pump. Provide waterproof reduced color-coded site plan complete with controller location.

Field Satellites. Rain Bird ESP-SAT Field Satellite Controller. The field satellites interface with the CCU. The satellite controller shall be stainless steel, pedestal mount, located adjacent too, and in-line with other satellites and CCU when grouped together. Station number requirements, and the number of satellites shall vary based upon project size and valve quantities. Contractor shall install 1" conduit with maxi wire between the field satellites and CCU. Electrical requirements for operation are 120 VAC with toggle disconnect/switch. Provide 1" conduit with pull-string from the electrical service panel to the field satellites. Provide 1" conduit with pull-string from the field satellites to the pump. Label each station on the controller lid with waterproof card and provide waterproof reduced color-coded site plan complete with station identification.

Hand-Held Remote Control Unit. Hand-held Remote Control System shall be TRC Commander, as manufactured by Remote Control Technologies, 18342 Redmond Way, Redmond, WA 98052, 800-275-8558. The Hand-held Remote Control Features shall include the following: Automatic resetting fuse on receiver, multiple station capabilities, operates on 24 VAC-solenoids, master valve or pump disable, programmable time duration, receiver built-in safety default, direct controller interface ready. Included with the system shall be the carrying case, transmitter, receiver-32 stations, 32 station PCC, two antennas, one 9-volt alkaline battery and accessory pack. Mount antenna to provide communication with all areas of the project. Provide one remote per each 20 acres of project site area.

Control Wire. UF-UL American Wire Gauge 12/14 Solid Copper Direct Burial Wire. Follow mainline piping where possible. Wire color shall be continuous over entire length. All splicing of wire shall occur within the valve box at valve locations using 3M-DBY/DBR wire connectors. Intermediate splicing may occur, but the splice shall be placed in a valve box. Use white wire for common ground wire. Use easily distinguished colors for control wire. Install 3 spare wires looped through each valve location. If multiple

controllers are required for the project, the wire colors shall be the following:

Controller "A" Control wire: Red	Common wire: White with red stripe
Controller "B" Control wire: Brown	Common wire: White with brown stripe
Controller "C" Control wire: Blue	Common wire: White with blue stripe
Controller "D" Control wire: Green	Common wire: White with green stripe

Communication Wire (maxi wire). Anixter F-03P19BPD Direct Burial Wire, or approved equal, between the Cluster Control Units and the Field Satellites. All splicing of communication wire shall occur within the valve box at valve locations using 3M-DBY wire connectors or DBR. Intermediate splicing may occur, but the splice shall be placed in a valve box.

Pipe and Valve Over Sizing. Designer shall design the irrigation system to utilize no more than 70 percent of the maximum design capacity of the pipe and valves in all lines (oversize the pipe). Provide no PVC pipe less than 1 inch in size. Indicate, at each valve location on the drawings, both the design flow and maximum capacity in GPM.

Mainline Pipe. Provide minimum cover of 24 inches over pipe to finish grade.

For pipe sizes over 3 inches, provide Class 200 PVC, SDR-21, rated at 200 PSI, conforming to the dimensions and tolerances established by ASTM D2241, with an integral belled end suitable for solvent welding.

For line sizes up to 3 inches, provide Schedule 40 PVC conforming to the dimensions and tolerances established by ASTM Standard D 1785, with an integral belled end suitable for solvent welding.

Pipe Saddles. Provide ductile iron saddle clamps for lateral connections to pipes 4 inch and larger.

Thrust Blocks. Thrust blocks shall be required on pipe greater than or equal to 3-inch diameter or for all rubber gasketed pipe. Thrust blocks shall be 3000 PSI cast-in-place concrete bearing against undisturbed soil. Wrap fitting with 2 mil. plastic to protect bolts, joints, and fittings from concrete. No. 4 rebar with mastic coating shall be installed where pipe shall be anchored to the thrust blocks, and at all location where mainline pipe changes directions. Install thrust blocks so the horizontal and vertical dimensions of the thrust blocks are approximately equal. Size thrust blocks per provided detail to be included in the construction drawings by the designer.

Lateral Pipe. Schedule 40 PVC conforming to the dimensions and tolerances established by ASTM Standard D1785, with an integral belled end suitable for solvent welding. (Minimum cover- 12" over pipe to finish grade)

Fittings/Nipple. Schedule 80 PVC fittings/nipples shall be installed unless otherwise noted. Lateral pipe may use schedule 40 PVC fittings unless otherwise noted.

Drip Lateral Pipe/PVC Hose. Schedule 40 PVC conforming to the dimensions and tolerances established by ASTM Standard D 1785, with an integral belled end suitable for solvent welding. PVC hose shall be ½" IPS Excalibur (no substitutions). Maximum length of the PVC hose shall be 48". (Minimum cover- 12" over pipe to finish grade.)

Valve Box Pipe. Provide a minimum of 24" of straight pipe outside of valve boxes for all pipe entering and exiting valve boxes, with no changes in size pipe size from the valve to 24" outside of the box.

Sleeving. Schedule 40 PVC conforming to the dimensions and tolerances established by ASTM Standard D 1785, with an integral belled end suitable for solvent welding. Sleeving diameter shall be a minimum of twice that of the pipe or wiring bundle passing through the sleeve, or larger is noted otherwise. (Minimum cover-24" over pipe to finish grade.)

Backfill. Prior to backfill, all mainline and lateral pipe shall be reviewed by the Owner's representative and corrections made by the Contractor. All mainline shall be bedded with masonry sand 4" below and 4" above the pipe. All pipe trench backfill shall be 1 inch minus, clean, native material.

Irrigation Heads.

Spray Heads. Rain Bird 1806 Heads with plastic matched precipitation nozzles. Heads shall be installed plumb with swing joints. Install using side inlet with head flush with grade. (Note: 1806 SAM (seal-a-matic) heads shall be installed when there is severe elevation change across the site. SAM heads require installation through the bottom inlet.)

Impact Rotor Heads. Rain Bird 41-51 Series brass impact rotors with high-impact plastic cases and color-coded plastic nozzles for heavy-traffic large turf applications. Heads shall be installed plumb with swing joints.

Gear Rotor Heads. Rain Bird 5500, 7005 and 8005 gear driven rotors with integral rubber cover and Rain Curtain nozzles or Hunter I-20's and I-25's gear driven rotors with integral rubber cover and plastic color-coded nozzles. Head shall be installed plumb with swing joints.

Drip Emitters. Bowsmith drip pressure compensation 1 or 2 GPH emitters. Install emitters on the uphill side of the root ball at slope locations. Equally space the required number of emitters around the perimeter of the plant at the edge of the root ball.

Emitters shall be installed on black male ½" threaded adaptors, which shall be solvent welded to the PVC hose. PVC hose shall be ½" IPS Excalibur (no substitutions). Maximum length of the PVC hose shall be 48".

Drip Line. Netafim (no substitutions) may be used in roadway medians for all irrigation and in parks for trees only. Drip line shall be laid in equal rows, not rings, on-surface and covered with two inches of decomposed granite, do not bury. Do not use push-plug connectors at the lateral connection.
Netafim USA, 5470 East Home Ave., Fresno, CA 93727, 559.453.6800.

Swing Joint. Swing joints shall be schedule 80 PVC nipples and Marlex street ELLs per provided detail. (linked detail scan)

Mainline/Hydrostatic Test. Upon completion of the irrigation main, and prior to the installation of any automatic control valves, test the entire main or portions of the main for proper operation. Flush all air from the mains being tested and check all components for proper operation. After completion of the flushing operation, test the mainline with 150-PSI hydrostatic pressure for a minimum of 2 hours. After the pressure within the mains has stabilized, no pressure loss will be allowed for the test period. Remove and/or replace any item or component of the system which does not comply with the test, and test the entire system again until satisfactory test result are obtained. Contractor shall request observation by the Owner's representative 48 hours prior to testing. The test shall be made in the presence of the Owner's representative, signed and dated.

Coverage Observation. Upon completion of the irrigation system and with the Owner's representative present, Contractor shall perform a coverage test on all components of the system to verify 100% coverage. The Contractor shall perform all work and furnish all materials necessary to correct any inadequacies and adjust heads/emitters as required.

Baseball/Softball- Special Irrigation Requirements (both turf and skinned infields).

Provide quick couplers and pop-up heads per the provided detail. Click for link to details.

Football/Soccer- Special Irrigation Requirements. None.

Warranty. Provide one-year minimum warranty from commencement of substantial completion on all irrigation material, equipment and workmanship against defects and failure. Fill and repair all depressions and settling of irrigation trenches and excavations. Repair damage to all premises/facilities caused by defective items. Repairs shall be made with three days of notification from the Owner.

Extra Materials. Provide the following spare materials to the Owner to match those used on the Project:

- 1 Field Satellite Controller if any used.
- 5 Irrigation Heads of each type and model used.
- 5 Quick Coupler Valves if any used. Also provide keys and hose swivels as previously stated in the quick coupler section.
- 5 Automatic Control Valves, Remote-Control Valves, Wye Filters, and Pressure Regulators if any used.
- 5 PVC Ball/Flush Valves of each type and size used.

This page intentionally left blank.