REQUEST FOR PROPOSALS (RFP)

RFP Number: 001-15-015

To Design and Construct
The Project Neon Design-Build Project
through a Design-Build Contract

Volume II
Technical Provisions

1263 South Stewart Street, Room 101
Carson City, NV 89712
Attention: Mark Stewart
Phone: (775) 888-7101 ext. 2124
Fax: (775) 888-7101

Dated as of March 9, 2015

This page intentionally left blank.

TABLE OF CONTENTS

1 GENERAL SCOPE OF WORK 1-1

1.1 Project Categories, Limits, Notice to Proceed (NTP) 1 Activities, and Interim Milestones 1-1
1.1.1 Department's Project Infrastructure 1-1
1.1.2 Local Agency Project Infrastructure 1-1
1.1.3 Locally Operated ITS Facilities 1-2
1.1.4 General Limits of Work 1-2
1.1.5 Notice to Proceed (NTP) 1 Scope of Work and Deliverables 1-4
1.1.6 Interim Milestones 1-6
1.2 Project Requirements 1-9
1.2.1 Local Infrastructure 1-9
1.2.2 Future Improvement Phases 1-9
1.2.3 Federal Highway Administration (FHWA) Oversight and Agreements 1-11
1.2.4 Control of Materials 1-11
1.2.5 Coordination 1-11
1.2.6 Coordination with Other Work 1-11
1.2.7 Safety and Health 1-11
1.2.8 Reference Information Documents 1-12
1.2.9 Biological and Physical Hazards 1-12
1.2.10 Deviations to the Technical Provisions 1-12
1.2.11 Request for Information 1-13
1.3 Construction Requirements 1-13
1.3.1 General Requirements 1-13
1.3.2 Documentation of Site 1-14
1.3.3 Limitations to Construction 1-14
1.4 Quality Control Requirements 1-16
1.5 Project Management Plan 1-16
1.6 Project Administration 1-17
1.6.1 Project Schedule 1-17
1.6.2 Document Management 1-20
1.6.3 Key Personnel 1-21
1.6.4 Lead Personnel Qualifications 1-23
1.6.5 Coordination of Work 1-25
1.6.6 Project Office 1-29
1.7 Responsibility for Utility Service Costs 1-40

2 QUALITY MANAGEMENT SYSTEM 2-1

2.1 General Requirements 2-1
2.1.1 Quality Management System Submittal 2-2
2.1.2 Quality Management System Reviews and Updates 2-2
2.2 Quality Management System Requirements 2-3
2.2.1 Management Responsibility 2-3
2.2.2 Quality System 2-6
2.2.3 Document and Data Control 2-9
2.2.4 Procurement and Purchasing 2-12
2.2.5 Control of Department-Supplied Items 2-13

2.2.6 Product Identification and Traceability 2-14
2.2.7 Control of Nonconforming Work 2-14
2.2.8 Corrective and Preventive Action 2-16
2.2.9 Handling, Storage, Packaging, Preservation, and Delivery 2-17
2.2.10 Quality Audits and Monitoring 2-19

3 DESIGN QUALITY MANAGEMENT 3-1

3.1 Designer Responsibilities 3-1
3.2 Design-Builder's Design Organization and Obligations 3-1
3.2.1 Designer 3-1
3.2.2 Lead Engineer 3-2
3.2.3 Responsible Engineer 3-2
3.2.4 Design Quality Manager 3-3
3.2.5 Landscape Architect 3-4
3.2.6 Designer Quality Control Checking 3-4
3.2.7 Structures Engineers assigned to Structures Design Units 3-4
3.3 Design Units 3-4
3.4 Relationship of Early Construction Starts to Design Development and Review 3-5
3.4.1 Released-for-Construction Rough Grading 3-5
3.5 Schedule for Design Checks, Design Reviews, and Submission of Checked Design 3-5
3.6 Revisions to Design 3-6
3.7 Department's Design Review Plan and Schedule 3-6
3.8 Design Development Phases 3-7
3.9 Design Reviews 3-7
3.9.1 Stage 1 Design 3-8
3.9.2 Stage 2 Design 3-9
3.9.3 Released-for-Construction Design 3-10
3.9.4 Final Design 3-11
3.10 Working Drawings 3-12
3.11 Record Drawings 3-12
3.12 Design Checks, Certifications, and Design Reviews 3-13
3.12.1 Design-Builder's Independent Design Checks 3-15
3.12.2 Design Reviews 3-16
3.12.3 Released-for-Construction 3-17
3.12.4 Detected Nonconforming Work and Comment Resolution 3-18
3.13 Design Exceptions 3-18
3.14 Design Changes 3-18
3.15 Design Support During Construction 3-19
3.16 Design Workshop 3-19
3.17 Quantity Estimates 3-20
3.18 Design Documentation 3-20
3.18.1 Progress Tracking 3-20
3.18.2 Design Quality Reports and Records 3-20
3.19 Design Documents and Construction Documents 3-21
3.19.1 Plans 3-21
3.19.2 Design Documents – Format, Organization, and Quantity 3-21

3.20 Supporting Engineering Information 3-22
3.20.1 Mapping 3-22
3.20.2 Survey 3-23
3.20.3 Geotechnical 3-23
3.20.4 Computer-Aided Drafting and Design Standards 3-23
3.20.5 Traffic 3-23
3.21 Software 3-23
3.21.1 Acceptable Project Software 3-23
4 CONSTRUCTION QUALITY ASSURANCE, QUALITY CONTROL, AND OVERSIGHT 4-1
4.1 Design-Builder Construction Responsibilities 4-1
4.1.1 Design-Builder Construction QC and QA Procedures 4-1
4.2 Design-Builder Inspection and Testing of Materials 4-2
4.2.1 General 4-2
4.2.2 Inspection and Testing Plan 4-2
4.2.3 Witness Points and Hold Points 4-2
4.2.4 Design-Builder Construction QC and QA Testing and Sampling 4-5
4.2.5 Collaborative Project Database 4-5
4.2.6 Incoming Product Inspection and Testing 4-6
4.2.7 In-Process Inspection and Testing 4-6
4.2.8 Final Inspection and Testing 4-7
4.2.9 Inspection and Testing Records 4-7
4.2.10 Control of Inspection, Measuring, and Testing Equipment 4-7
4.2.11 Inspection and Testing Status 4-9
4.3 Department Acceptance Inspection and Testing 4-9
4.3.1 Department Oversight 4-9
4.3.2 Department Independent Assurance 4-9
4.4 Material Testing Process 4-10
4.5 Design-Builder's Construction Quality Management Organization 4-11
4.5.1 Construction Quality Manager 4-11
4.5.2 Construction Manager 4-11
4.5.3 Quality Staffing Levels 4-11
4.5.4 Laboratories 4-11
4.6 Design-Builder Scheduling and Notice to the Department 4-12
4.7 Documentation 4-12
4.8 Material Certifications 4-13
4.9 Construction QA and QC for Final Acceptance 4-14
5 LANDSCAPE AND AESTHETICS 5-1
5.1 General 5-1
5.2 Standards and References 5-1
5.3 Design Requirements 5-1
5.3.1 Preliminary Landscape and Aesthetics Plan 5-1
5.3.2 Mitigation Planting Plan 5-2
5.3.3 Landscape Design Documents 5-3
5.3.4 Color for Corridor Treatments 5-3
5.3.5 Bridge Aesthetics 5-4
5.3.6 Wall Aesthetics 5-5

5.3.7 Grading and Slope Paving Aesthetics 5-5
5.3.8 Sidewalks and Medians 5-5
5.3.9 Groundplane 5-6
5.3.10 Vegetation.....5-6
5.3.11 Sculptural/Artistic Features.....5-7
5.3.12 Fencing 5-7
5.3.13 Aesthetic Lighting 5-7
5.3.14 Irrigation.....5-8
5.3.15 Local Agency Project Infrastructure L&A Work.....5-8
5.3.16 Deterrence of Vandalism and Unauthorized Use of Facilities 5-9
5.4 Construction Requirements.....5-9
5.4.1 General 5-9
5.4.2 Materials 5-10
5.4.3 Soil Preparation 5-10
5.4.4 Noxious Weed Control Plan.....5-10
5.4.5 Herbicide.....5-10
5.4.6 Planting.....5-11
5.4.7 Ground Cover Mulch.....5-11
5.5 Landscape Maintenance Considerations 5-11
5.6 Submittals.....5-12
5.6.1 Stage 1 Design 5-12
5.6.2 Stage 2 Design 5-12
5.6.3 Released-for-Construction Design.....5-13
5.6.4 Final Design.....5-13
5.6.5 Working Drawings.....5-13
5.6.6 Record Drawings 5-13
6 PUBLIC INVOLVEMENT.....6-1
6.1 General.....6-1
6.2 Standards and References.....6-1
6.3 Requirements 6-1
6.3.1 Public Involvement Plan 6-1
6.3.2 Public Information Meetings 6-2
6.3.3 Project Informational Materials 6-4
6.3.4 Response to Inquiries and Comments.....6-6
6.3.5 Public Notifications 6-6
6.3.6 Adjacent Property Owners.....6-6
6.3.7 Public Contact Records 6-6
6.3.8 Emergency, Unforeseen Utility Disruptions, Hazardous Conditions, Traffic Emergencies, Security, and Loss-of-Access Notifications 6-8
6.3.9 Special Events, Conventions, and Annual Events.....6-9
6.3.10 Public Forums, Project Hotline and Project Website 6-12
6.3.11 Construction Progress Photographs and Videos.....6-12
6.4 Department's Public Involvement Responsibilities.....6-16
6.5 Media Relations.....6-16
6.6 Public Information Office 6-17
6.7 Submittals.....6-18

7 ENVIRONMENTAL 7-1
7.1 General 7-1
7.2 The Department's Environmental Roles and Responsibilities 7-1
7.3 Design-Builder's Responsibilities 7-1
7.3.1 Environmental Management System 7-2
7.3.2 Environmental Compliance and Mitigation Plan 7-2
7.3.3 Environmental Quality Management Plan 7-2
7.3.4 Environmental Compliance Manager 7-3
7.3.5 Environmental Compliance and Mitigation Training Program 7-3
7.4 Governmental Approvals and Modifications 7-4
7.4.1 Government Approval Submittals 7-4
7.4.2 Governmental Approval Modifications 7-4
7.5 Environmental Requirements 7-5
7.5.1 Natural Resources 7-5
7.6 Cultural Resources 7-6
7.7 Traffic and Construction Noise 7-7
7.8 Hazardous Materials 7-8
7.8.1 Hazardous Materials Management Plan 7-9
7.8.2 Recycling Nonhazardous Materials 7-9
7.9 Submittals 7-10
7.9.1 Stage 1 Design 7-10
7.9.2 Released-for-Construction Design 7-10
8 DRAINAGE 8-1
8.1 General 8-1
8.2 Standards and References 8-1
8.3 Design Requirements 8-1
8.3.1 Hydrology 8-2
8.3.2 Hydraulics 8-3
8.3.3 USACE Permits 8-4
8.3.4 Local Agency Project Infrastructure 8-4
8.3.5 Pavement Drainage 8-5
8.3.6 Inlets 8-5
8.3.7 Storm Drain Systems 8-6
8.3.8 Ditches/Drainage Channels 8-6
8.3.9 Culverts/Pipes 8-7
8.3.10 Detention Basins 8-7
8.3.11 Bridges 8-8
8.4 Construction 8-8
8.4.1 Water Quality 8-9
8.4.2 Erosion Control 8-9
8.4.3 Permanent Erosion Protection 8-10
8.4.4 Stormwater Pollution Prevention Plan 8-10
8.5 Submittals 8-10
8.5.1 Stage 1 Design 8-10
8.5.2 Stage 2 Design 8-10
8.5.3 Released-for-Construction Design 8-11
8.5.4 Final Design 8-11
8.5.5 Working Drawings 8-11

8.5.6 Record Drawings 8-11

9 ROADWAY 9-1

9.1 General....9-1
9.2 Standards and References....9-1
9.3 Design Requirements....9-1
9.3.1 Roadway Design Requirements 9-1
9.3.2 Freeway 9-1
9.3.3 High-Occupancy Vehicle Lanes....9-7
9.3.4 Local Infrastructure 9-8
9.3.5 Design Exceptions 9-11
9.3.6 Transit Facilities....9-12
9.3.7 Bicycle and Pedestrian Work....9-12
9.3.8 Miscellaneous Roadway Design Requirements 9-13
9.3.9 Control of Access....9-15
9.3.10 Change-In-Access 9-15
9.4 Construction Requirements....9-15
9.4.1 General 9-16
9.5 Submittals....9-16
9.5.1 Stage 1 Design 9-16
9.5.2 Stage 2 Design 9-17
9.5.3 Released-for-Construction Design....9-17
9.5.4 Final Design....9-18
9.5.5 Working Drawings....9-18
9.5.6 Record Drawings 9-18

10 PAVEMENT 10-1

10.1 General....10-1
10.2 Standards and References....10-1
10.3 Requirements 10-1
10.3.1 Final Pavement Surface 10-2
10.3.2 Subgrade Requirements for Pavements....10-2
10.3.3 Specified Pavement Designs....10-4
10.3.4 Temporary Pavement 10-9
10.4 Not Used 10-9
10.5 Submittals....10-9
10.5.1 Stage 1 Design 10-9
10.5.2 Stage 2 Design 10-9
10.5.3 Released-for-Construction Design....10-9
10.5.4 Final Design....10-9
10.5.5 Working Drawings....10-9
10.5.6 Record Drawings 10-9

11 TRAFFIC....11-1

11.1 General....11-1
11.2 Standards and References....11-1
11.3 Traffic Operations (Design) Requirements....11-1
11.3.1 Intersection Operations Requirements 11-2
11.3.2 Freeway Operations Requirements 11-5
11.4 Submittals....11-7
11.4.1 Stage 1 Design 11-7

11.4.2 Stage 2 Design 11-7
11.4.3 Released-for-Construction Design....11-7
11.4.4 Final Design....11-7
11.4.5 Working Drawings....11-7
11.4.6 Record Drawings 11-7

12 MAINTENANCE OF TRAFFIC 12-1

12.1 General....12-1
12.1.1 Traffic Control Management 12-1
12.2 Standards and References....12-1
12.3 Transportation Management Plan 12-1
12.3.1 Additional Design-Builder Requirements for TMP Development 12-2
12.4 Design Requirements....12-4
12.4.1 General 12-4
12.4.2 Design Parameters for Traffic Control Plans 12-7
12.4.3 Construction Closures 12-9
12.4.4 Construction Closure Sequencing 12-12
12.4.5 Request for Construction Closures....12-14
12.4.6 Detours 12-15
12.4.7 Advanced Traffic Management System....12-15
12.4.8 Guide Signing 12-16
12.4.9 Roadway Lighting 12-16
12.4.10 Public Transit 12-16
12.4.11 Traffic Signal Modifications....12-17
12.4.12 Other Projects....12-17
12.4.13 Permits....12-17
12.5 Construction Requirements....12-17
12.5.1 Construction Access and Haul Routes 12-17
12.5.2 Notification and Coordination....12-18
12.5.3 Traffic Control Inspections and Records....12-19
12.6 Submittals....12-19
12.6.1 Stage 1 Design 12-20
12.6.2 Stage 2 Design 12-20
12.6.3 Released-for-Construction Design....12-20
12.6.4 Final Design....12-20
12.6.5 Working Drawings....12-20
12.6.6 Record Drawings 12-21

13 GEOTECHNICAL 13-1

13.1 General....13-1
13.2 Standards and References....13-1
13.3 Design Requirements....13-1
13.3.1 Geotechnical Subsurface Exploration....13-1
13.3.2 Geotechnical Design....13-3
13.3.3 Interim Design Memorandum 13-10
13.4 Construction 13-10
13.4.1 Temporary Support of Excavation 13-11
13.4.2 Utilities 13-11
13.4.3 Construction of Bridge and Retaining Wall Foundations 13-11
13.4.4 MSE Retaining Wall Construction....13-13
13.4.5 Construction of Top-Down Walls (Cut Walls) 13-14

13.4.6 Construction of Pavement Subgrades 13-14
13.5 Submittals 13-14
13.5.1 Stage 1 Design 13-15
13.5.2 Stage 2 Design 13-15
13.5.3 Released-for-Construction Design 13-15
13.5.4 Final Design 13-17
14 STRUCTURES 14-1
14.1 General 14-1
14.2 Standards and References 14-1
14.3 Design Requirements 14-2
14.3.1 General 14-2
14.3.2 Bridge Layout and Design 14-3
14.3.3 Bridge Load Rating 14-7
14.3.4 Retaining Walls 14-11
14.3.5 Sign, Signal, and Lighting Structures 14-12
14.3.6 Drainage Structures 14-13
14.4 Construction Requirements 14-13
14.4.1 Materials 14-13
14.4.2 Construction Loads on Structures 14-14
14.4.3 Bridge Demolition 14-14
14.4.4 Drilled Shaft and Column Construction 14-15
14.4.5 Superstructures 14-15
14.4.6 Mass Concrete 14-15
14.4.7 Falsework and Formwork 14-16
14.4.8 Bridge Widenings 14-16
14.4.9 Corrosion Protection 14-16
14.4.10 Temporary Shoring Systems 14-17
14.4.11 Aesthetics 14-17
14.4.12 Rehabilitating and Repairing Existing Bridges 14-17
14.5 Submittals 14-19
14.5.1 Stage 1 Design 14-20
14.5.2 Stage 2 Design 14-20
14.5.3 Release-for-Construction Design 14-21
14.5.4 Final Design 14-21
14.5.5 Working Drawings 14-21
14.5.6 Record Drawings 14-21
15 SIGNALS AND LIGHTING 15-1
15.1 General 15-1
15.2 Standards and References 15-2
15.3 Traffic Signals 15-2
15.3.1 Performance Requirements 15-2
15.3.2 Design and Construction Requirements 15-3
15.3.3 Temporary Traffic Signals 15-7
15.3.4 Traffic Control Device Verification – Signals 15-8
15.4 Lighting 15-8
15.4.1 Design and Construction Requirements 15-8
15.4.2 Design Lighting Roll Plan 15-12
15.4.3 Plan Sheet Requirements 15-12
15.4.4 Performance Requirements 15-12

15.4.5 Materials 15-14
15.4.6 Traffic Control Device Verification – Lighting 15-14
15.5 Submittals 15-14
15.5.1 Stage 1 Design 15-17
15.5.2 Stage 2 Design 15-17
15.5.3 Released-for-Construction Design 15-17
15.5.4 Final Design 15-17
15.5.5 Working Drawings 15-17
15.5.6 Record Drawings 15-18
16 SIGNS AND PAVEMENT MARKINGS 16-1
16.1 General 16-1
16.2 Standards and References 16-1
16.3 Signing 16-1
16.3.1 Design and Construction Requirements 16-1
16.3.2 Sign Lighting 16-5
16.4 Pavement Markings 16-5
16.4.1 Design and Construction Requirements 16-5
16.5 Submittals 16-6
16.5.1 Stage 1 Design 16-6
16.5.2 Stage 2 Design 16-6
16.5.3 Released-for-Construction Design 16-6
16.5.4 Final Design 16-7
16.5.5 Working Drawings 16-7
16.5.6 Record Drawings 16-7
17 RAILROAD COORDINATION 17-1
17.1 General Requirements 17-1
17.2 Railroad Crossings 17-1
17.3 Administrative Requirements 17-2
17.3.1 Standards 17-2
17.3.2 Railroad Scope 17-2
17.3.3 Railroad Requirements 17-3
17.3.4 Railroad Agreements 17-3
17.4 Design Requirements 17-3
17.4.1 Railroad Submittal Packages 17-3
17.5 Construction Requirements 17-4
17.5.1 Railroad Operations 17-4
17.5.2 Railroad Flagman(s) Services 17-4
17.5.3 Operational Safety 17-5
17.6 Submittals 17-5
18 UTILITIES 18-1
18.1 General 18-2
18.1.1 Utility Owners 18-2
18.1.2 General Requirements 18-2
18.1.3 Utility Design and Construction Constraints 18-4
18.1.4 Abandoned and/or Dormant Utilities 18-4
18.1.5 Standard of Care Applicable to Utility Work 18-5
18.1.6 Utility Agreement Process 18-5
18.1.7 Not Used 18-7

18.1.8 Additional ROW and Easements 18-7
18.1.9 Instructions and Authorizations....18-7
18.1.10 Utility Owner's Right to Inspect....18-8
18.1.11 Allocation of Responsibilities to Perform Adjustment Work 18-8
18.1.12 Protection of Utility Facilities....18-9
18.1.13 Protection of Utility Facilities Already Relocated 18-9
18.1.14 Permits....18-10
18.2 Utility Coordination Requirements....18-10
18.2.1 Department Utility Construction Manager....18-10
18.2.2 Meetings and Correspondence....18-12
18.2.3 Design-Builder's Coordination Requirements....18-13
18.2.4 Betterments 18-15
18.3 Design Requirements....18-15
18.3.1 Responsibility for Design of Utility Adjustment Work 18-15
18.3.2 Utility Adjustment Work Design Documents 18-16
18.3.3 Identification of Utility Facilities....18-17
18.3.4 Changes to Utility Adjustment Design 18-17
18.3.5 Additional Design Requirements 18-18
18.3.6 Construction Requirements 18-19
18.3.7 Restricted and No Work Zones....18-20
18.3.8 Record Drawings 18-20
18.4 Other Utility Requirements 18-21
18.4.1 Notification....18-21
18.4.2 Inspection 18-21
18.4.3 Utility Work Limits 18-21
18.4.4 Design-Builder-Caused Changes to Utility Owner Work 18-21
18.4.5 Quality Control....18-22
18.4.6 Construction Record....18-22
18.4.7 Utility Damage Reports....18-22
18.4.8 Utility Adjustment Master Plan....18-23
19 INTELLIGENT TRANSPORTATION SYSTEMS (ITS)....19-1
19.1 General....19-1
19.2 Testing....19-2
19.2.1 Testing Stages....19-3
19.2.2 Test Procedures, Software, and Data Forms 19-3
19.2.3 Test Scheduling and Witnesses 19-4
19.2.4 Test Results Submission and Acceptance 19-4
19.2.5 Factory Acceptance Test....19-5
19.2.6 Pre-Installation Test....19-5
19.2.7 Stand-Alone Test....19-5
19.2.8 Subsystem Test....19-5
19.2.9 System Acceptance Test....19-6
19.3 Maintenance of ITS 19-8
19.4 System Integrator 19-19
19.5 Active Traffic Management....19-20
19.5.1 Dynamic Message Sign for ATM 19-21
19.5.2 ATM Systems 19-21
19.5.3 Gantry Placement Criteria 19-22
19.5.4 Types of Gantries 19-23

19.5.5 Testing Requirements 19-25
19.6 Dynamic Message Signs 19-25
19.6.1 Design Requirements 19-25
19.6.2 Furnish and Installation Requirements 19-26
19.6.3 Type ATM-1 Dynamic Message Sign Performance Requirements 19-27
19.6.4 Type ATM-2 Dynamic Message Sign Performance Requirements 19-27
19.6.5 Type ATM-3 Dynamic Message Sign Performance Requirements 19-27
19.6.6 General Dynamic Message Sign Performance Requirements 19-27
19.6.7 Testing Requirements 19-29
19.7 Flow Detector System 19-29
19.7.1 Furnish and Installation Requirements 19-30
19.7.2 Testing Requirements 19-31
19.8 Closed Circuit Television 19-31
19.8.1 Location and Coverage Requirements 19-31
19.8.2 Closed-Circuit Television System Requirements 19-32
19.8.3 Testing Requirements 19-41
19.9 Ramp Meters 19-42
19.9.1 Testing Requirements 19-43
19.10 Count Stations 19-43
19.10.1 Design and Construction Requirements 19-44
19.11 Fiber Optic Communications 19-44
19.11.1 Fiber Optic Trunk Line Cable 19-45
19.11.2 Furnish and Installation Requirements 19-46
19.11.3 Communications Distribution Cable Assembly or Fiber Optic Branch Cable 19-47
19.11.4 Fiber Optic Jumper Cable 19-47
19.11.5 Connectors 19-48
19.11.6 Integrated Fiber Optic Splice/Termination Unit 19-48
19.11.7 Fiber Optic Distribution Equipment 19-49
19.11.8 Splicing Method 19-49
19.11.9 Terminations 19-50
19.11.10 Labeling 19-50
19.11.11 Cable Management 19-50
19.11.12 Testing Requirements 19-51
19.12 Field Hardened Ethernet Switch 19-52
19.12.1 Furnish and Installation Requirement 19-52
19.12.2 Testing Requirements 19-53
19.13 ITS Cabinets 19-53
19.13.1 Furnish and Installation Requirement 19-53
19.13.2 Additional Cabinet Equipment 19-54
19.13.3 Testing Requirements 19-54
19.14 Conduit 19-55
19.15 Pull Boxes 19-55
19.16 Bonding and Grounding 19-56
19.17 Power Distribution 19-56
19.17.1 Electrical Interfaces and Distribution 19-56

19.17.2 General Electrical Specifications 19-57
19.17.3 Power Distribution....19-57
19.17.4 Testing 19-58
19.18 Submittals....19-58
19.18.1 Early Construction ATM Submittals 19-58
19.18.2 Stage 1 Design 19-59
19.18.3 Stage 2 Design 19-60
19.18.4 Released-for-Construction....19-60
19.18.5 Testing Submittals 19-61
20 MAINTENANCE REQUIREMENTS....20-1
20.1 Maintenance Concept Meeting....20-1
20.2 Maintenance Work Plan 20-1
20.3 Scope and Schedule of Maintenance....20-2
20.4 Special Requirements for the City of Las Vegas 20-2
20.5 L&A Maintenance Work....20-3
20.6 Extra Maintenance Work 20-4
20.7 Maintenance Activities....20-4
21 ROW ACQUISITION 21-1
21.1 Project ROW 21-1
21.2 Monument and Fence Construction 21-1
21.3 Project ROW Acquisition Status....21-1
21.4 Residential/Commercial Displacements....21-2
21.5 Property Demolition....21-2
21.6 Project ROW Access....21-2
22 NOT USED....22-1
23 NOT USED....23-1
24 NOT USED....24-1
25 SUBMITTALS 25-1
26 STANDARDS AND REFERENCES 26-1
26.1 Modifications to Department Standards and References....26-1
26.1.1 Department's Standard Specifications and Standard Plans 26-1
26.1.2 Standards, Manuals, and References 26-3
26.2 Modifications to the Department's Standard Specifications 26-3
26.3 City of Las Vegas Standards....26-4
26.4 Miscellaneous Specifications and Standards 26-5
26.5 Project Neon-DB Standard Drawings....26-5
26.5.1 Standard Drawing Development and Reviews 26-6

ATTACHMENTS

01-1 TENTATIVE LIST OF CONCURRENT PROJECTS ADJACENT TO THE PROJECT

01-2 SAFETY AND HEALTH – SAFETY PLAN

01-3 PROJECT MANAGEMENT PLAN

01-4 PROJECT SCHEDULE

02-1 QUALITY MANUAL

02-2 DESIGN QUALITY MANAGEMENT PLAN

02-3 CONSTRUCTION QUALITY MANAGEMENT PLAN

02-4 TRAFFIC QUALITY MANAGEMENT PLAN

02-5 ENVIRONMENTAL QUALITY MANAGEMENT PLAN

05-1 LANDSCAPE AND AESTHETICS REQUIREMENTS

07-1 PERMITS AND STATUS

08-1 DRAINAGE DESIGN CRITERIA SUMMARY

08-2 DRAINAGE DESIGN COMPONENTS: REQUIREMENTS / LIMITATIONS / PROHIBITIONS

09-1 FREEWAY DESIGN CRITERIA

09-2 ARTERIALS, COLLECTORS, AND LOCAL STREETS DESIGN CRITERIA

09-3 DESIGN EXCEPTIONS AND DEVIATIONS

09-4 BRIDGE REPLACEMENTS I-937, I-938, G-941, AND I-945

10-1 ASPHALT CONCRETE FRICTION COURSE

10-2 PLANTMIX BITUMINOUS GAP-GRADED SURFACE

12-1 CONSTRUCTION CLOSURE TABLES

14-1 BRIDGE REHABILITATION WORK

19-1 STANDARD DRAWINGS FOR ITS POLES, CABINETS, CONDUITS, PULL BOXES, AND COUNT LOOPS

21-1 PROJECT ROW ACCESS DATES AND CONSTRAINTS

21-2 CLV PROJECT ROW ACCESS DATES AND CONSTRAINTS

26-1 AMENDMENTS TO THE STANDARD SPECIFICATIONS

26-2 CITY OF LAS VEGAS SPECIAL PROVISIONS

TABLES

1-1 NTP1 DELIVERABLES 1-4
1-2 PMP OUTLINE 1-17
2-1 QMS DOCUMENTATION 2-7
2-2 NONCONFORMING WORK AND CORRESPONDING CORRECTIVE ACTIONS 2-15
3-1 DESIGN DEVELOPMENT PHASES 3-7
3-2 DESIGN CHECKS (QC), DQM, CERTIFICATIONS, AND DESIGN REVIEWS FOR PERMANENT AND TEMPORARY COMPONENTS 3-14
6-1 PUBLIC NOTIFICATIONS 6-7
6-2 SPECIAL EVENTS 6-10
6-3 CONVENTIONS 6-11
6-4 ANNUAL EVENTS (BY MONTH) 6-11
10-1 SPECIFIED PAVEMENT DESIGNS LOCAL AGENCY PROJECT INFRASTRUCTURE 10-4
10-1A SPECIFIED PAVEMENT DESIGNS DEPARTMENT'S PROJECT INFRASTRUCTURE 10-6
11-1 INTERSECTION TRAFFIC OPERATIONS (LOS) REQUIREMENTS 11-3
11-2 INTERSECTION TRAFFIC OPERATIONS (MAXIMUM QUEUE) REQUIREMENTS 11-4
11-3 FREEWAY SEGMENTS TRAFFIC OPERATIONS REQUIREMENTS (NB I-15) 11-5
11-4 FREEWAY SEGMENTS TRAFFIC OPERATIONS REQUIREMENTS (SB I-15) 11-6
11-5 FREEWAY SEGMENTS TRAFFIC OPERATIONS REQUIREMENTS (NB COLLECTOR-DISTRIBUTOR ROAD) 11-6
11-6 FREEWAY SEGMENTS TRAFFIC OPERATIONS REQUIREMENTS (SB COLLECTOR/ DISTRIBUTOR ROAD) 11-7
12-1 ROAD AND LANE RESTRICTION NOTIFICATION REQUIREMENTS 12-19
14-1 DESIGN COVER FOR DRAINAGE STRUCTURES 14-13
15-1 LIGHT LOSS FACTORS 15-10
15-2 ILLUMINANCE AND LUMINANCE DESIGN VALUES DEPARTMENT'S PROJECT INFRASTRUCTURE 15-11
15-3 MATERIALS 15-14
19-1 ITS MAINTENANCE PERFORMANCE REQUIREMENTS 19-10
20-1 MAINTENANCE WORK AND EXTRA MAINTENANCE WORK 20-5
25-1 SUBMITTALS 25-1
26-1 STANDARDS AND REFERENCES 26-6

FIGURES

2-1 PROJECT QUALITY ORGANIZATION 2-4
3-1 DESIGN CHECK/REVIEW FLOWCHART 3-13
3-2 DESIGN REVIEW FLOWCHART FOR RECORD DRAWINGS 3-14

1 GENERAL SCOPE OF WORK

Design-Builder and its Subcontractors shall perform all Work required to provide for a high-quality, aesthetic, durable, and maintainable facility; improve mobility and safety for the public; maintain stakeholders' trust; and uphold the Department's integrity. Design-Builder shall provide all necessary services to perform all Work (where applicable) for all permanent and temporary infrastructure features of the Project.

1.1 Project Categories, Limits, Notice to Proceed (NTP) 1 Activities, and Interim Milestones

The Project is grouped into three categories, as described in this Section 1.1, for which Design-Builder is required to perform Work as set forth in these Technical Provisions and Contract Documents. The general work limits for the Project's Design Work and Construction Work are described in Section 1.1.4 (*General Limits of Work*).

1.1.1 Department's Project Infrastructure

The Project's newly constructed, reconstructed, or rehabilitated infrastructure for the I-15 and US 95/I-515 freeway system improvements includes, but is not limited to, mainline general-purpose lanes, auxiliary lanes, high-occupancy vehicle (HOV) lanes, access locations (entrance and exit ramps), collector-distributor roadways, and the supporting infrastructure including but not limited to drainage systems, detention basins, retention facilities, pavements, structures, Intelligent Transportation Systems (ITS), lighting, signing, Landscape and Aesthetics (L&A), safety devices, and other elements providing for the overall functionality of the system (collectively, the "Department's Project Infrastructure").

Design-Builder shall design and construct the Department's Project Infrastructure to provide for a high-quality, aesthetic, durable, and maintainable facility as set forth in these Technical Provisions. Design-Builder shall be responsible for maintaining the infrastructure within the Site as described in Section 20 (*Maintenance Requirements*) providing a safe, effective, and reliable level of operation and condition during the Construction Work as set forth in these Technical Provisions and the other Contract Documents.

The general limits of the Work for the Department's Project Infrastructure are described in Section 1.1.4 (*General Limits of Work*) and illustrated in *Exhibit 1 General Work Limits* included in the Reference Information Documents (RIDs).

1.1.2 Local Agency Project Infrastructure

The Project's existing, newly constructed, reconstructed, or rehabilitated infrastructure for the roadway improvements includes, but is not limited to, travel lanes, turn lanes, auxiliary lanes, driveways, transit facilities, medians, sidewalks, and the supporting infrastructure including but not limited to drainage systems, sanitary sewer systems, pavements, structures, ITS, lighting, signing, L&A, safety devices, and other elements providing for the overall functionality of the roadway system, which the City of Las Vegas or other third parties will operate and maintain upon acceptance of Substantial Completion or as otherwise specified in these Technical Provisions (collectively, the "Local Agency Project Infrastructure"). The roadways included as part of the Local Agency Project Infrastructure that are to be designed and constructed by Design-Builder

are listed below. Local Agency Project Infrastructure also includes the Clark County Regional Flood Control District (CCRFCD) facilities and City of Las Vegas' L&A Work.

Local Agency Project Infrastructure – Roadways

Alta Drive	Industrial Road	*SR 159 Charleston Boulevard
Bearden Drive	Iron Horse Drive	*SR 589 Sahara Avenue
Bonneville Avenue	Loch Lomond Way	Symphony Park Avenue
Charmast Lane	Martin Luther King Boulevard	Wall Street
Desert Lane	Oakey Boulevard	Western Avenue
Ellis Avenue	Pinto Lane	Wyoming Avenue
Grand Central Parkway	Slip Ramp (Martin Luther King Boulevard to Charleston Boulevard)	
Hastings Avenue	Silver Avenue	

* The roadway may have joint operations and maintenance responsibilities between the Department and the City of Las Vegas. Work requirements shall be in accordance with the Project Standards for the Department's Project Infrastructure.

The Design-Builder shall design and construct the Local Agency Project Infrastructure as set forth in these Technical Provisions. Design-Builder shall be responsible for maintaining the infrastructure within the Site as described in Section 20 (*Maintenance Requirements*) providing a safe, effective, and reliable level of operation and condition during the Construction Work as set forth in these Technical Provisions and the other Contract Documents.

The general limits of the Work for the Local Agency Project Infrastructure are described in Section 1.1.4 (*General Limits of Work*) and as illustrated in *Exhibit 1 General Work Limits* included in the RIDs.

1.1.3 Locally Operated ITS Facilities

The Project's new and existing ITS facilities and supporting infrastructure provided to improve mobility, and to enhance safety and communications to the public, and which are included as part of the Freeway and Arterial System of Transportation (FAST) shall be operated "locally" by FAST or the Department during the Construction Work.

Design-Builder shall design and construct the Locally Operated ITS Facilities and supporting infrastructure as described in Section 19 (*Intelligent Transportation Systems*). The Work for ITS also includes Active Traffic Management (ATM) gantries and additional cameras for monitoring ATM signs servicing both directions of travel on I-15, US 95, and I-515.The general description and limits of the Work for the Locally Operated ITS Facilities are described in Section 1.1.4 (*General Limits of Work*) and illustrated in *Exhibit 1 General Work Limits* included in the RIDs.

1.1.4 General Limits of Work

The general description and limits of Work are outlined below. These limits, alignments, and stationing are general in nature and are only intended to provide the design intent as reflected in

the Reference Design provided as part of the RIDs. The RID titled *Exhibit 1 General Work Limits* illustrates the general limits of the Work for the Project infrastructure improvements.

1.1.4.1 Department's Project Infrastructure Limits

- The I-15 freeway system southbound Work extends from the US 95/I-515 undercrossing bridge ("MS" 859+50) to approximately 2,400 feet south of Sahara Avenue ("MS" 714+00).
- The I-15 freeway system northbound Work extends from approximately Sahara Avenue ("MN" 739+00) to the US 95/I-515 undercrossing bridge ("MN" 859+50).
- The US 95/I-515 freeway system Work extends from approximately 1,000 feet west of the Rancho Drive undercrossing ("L" 1204+00) to approximately 300 feet east of the I-15 interchange ("L" 1124+00).
- The US 95/I-515 Work also includes the removal of stockpiled embankment material south of US 95/I-515 between the I-15 interchange and North City Parkway from approximately "L" 1127+50 to approximately "L" 1120+00.
- The Work for the HOV lanes in the southbound direction of travel on I-15 extends from approximately 2,800 feet north of Charleston Boulevard ("MS" 829+00) to approximately 2,400 feet south of Sahara Avenue ("MS" 714+00). The Work for HOV lanes in the northbound direction of travel on I-15 extends from approximately Sahara Avenue ("MN" 739+00) to approximately 2,100 feet north of Charleston Boulevard ("MN 822+00). The Work for the new direct HOV connector between I-15 and US 95 HOV system extends from the I-15 HOV lanes to approximately 700 feet east of Rancho Drive ("MC" 1185+00).
- The Work also includes drainage and roadside barrier improvements on I-15 extending from approximately "Le" 682+00 to "MS" 714+00 and "Le" 682+00 to "MN" 728+00 between Desert Inn Road and Sahara Avenue.
- The Work for the replacement of four existing bridges (Bridge I-937, Bridge I-938, Bridge I-945, and Bridge G-941) includes all necessary infrastructure improvements for the bridges, approaches to the bridges, and improvements for the crossing roadways and railroad tracks.
- The Work limits for the "Express to HOV Conversion" includes roadway mill and overlay, pavement markings and signage Work on I-15 from the Silverado Ranch Boulevard interchange with I-15 to south of the Sahara Avenue interchange with I-15 ("Le" 714+00). The conversion includes converting one express lane in each direction to an HOV lane between the Silverado Ranch Boulevard interchange with I-15 to the I-215 Beltway interchange with I-15. Work limits for HOV conversion also includes converting the two express lanes in each direction to an HOV lane and a general purpose lane between the I-215 Beltway interchange with I-15 to south of the Sahara Avenue interchange with I-15 ("Le" 714+00).

1.1.4.2 Local Agency Project Infrastructure Limits

The general limits of Work for the Local Agency Project Infrastructure improvements, including the CCRFCD facilities, are depicted in the Reference Design drawings provided as part of the RIDs.

1.1.4.3 Locally Operated ITS Facilities Limits

The general limits of Work for the ITS facilities include the I-15 and US 95 freeway system for all ITS Work as described in Section 19 (*Intelligent Transportation Systems*). The Work for ITS also includes ATM gantries and additional cameras for monitoring ATM signs servicing both directions of travel on I-15 from Warm Springs Road ("Le" 412+00) to approximately 2,400 feet south of Sahara Avenue ("MS" 714+00); three additional ATM gantries and additional cameras for monitoring ATM signs servicing southbound I-15 north of the US 95/I-515 undercrossing bridge ("MN" 859+50); three additional ATM gantries and additional cameras for monitoring ATM signs servicing eastbound US 95 west of "L" 1204+00; and finally three additional ATM gantries and additional cameras for monitoring ATM signs servicing westbound I-515 east of "L" 1124+00.

1.1.5 Notice to Proceed (NTP) 1 Scope of Work and Deliverables

The Notice to Proceed (NTP) 1 Scope of Work consists of those activities that are: (1) necessary to prepare deliverables that are required to be submitted and/or completed before NTP2 will be issued, as indicated in Table 1-1, and (2) NTP1 Mobilization Work as described below.

Table 1-1 NTP1 Deliverables

No	Description	TP Section	Submitted Prior to Issuance of NTP2	Approved Prior to Issuance of NTP2
1	Project Management Plan (PMP)	1.5	PMP(1)	PMP(1)
	Project Administration	1.5		
	Quality Management System and Quality Manual	2.1.1		
	Design Quality Management Plan	3.1		
	Construction Quality Management Plan	4.1		
	Environmental Management	7.3.3		
	Public Involvement Plan	6.3.1		
	Safety Plan	1.2.7		
	Communications Plan	1.5		
	Transportation Management Plan	12.3		
	Preliminary L&A Plan	5.3.1		
2	Interim Project Office	1.6.6.1	X	X
3	Project Office Setup	1.6.6.5	X	X
4	Project Baseline Schedule	1.6.1	X	X
5	Documentation of Site	1.3.2	X	X
6	Maintenance Work Plan	20.2	X	X
7	Construction ATM System	19	X	X
8	NTP1 Mobilization			

(1) Deliverable shall be submitted in accordance with the PMP requirements as defined in Attachment 01-3 (*Project Management Plan*) of these Technical Provisions.

Design-Builder shall provide the following Work (collectively, "NTP1 Mobilization"):

- Interim Project office as specified in Section 1.6.6.1 (*Interim Project Office*)
- Mobilize the Project Office as specified in Section 1.6.6 (*Project Office*)
- Partnering plan and initial partnering session as specified in Section 19 of the Contract
- Establish dispute resolution board as specified in Section 19 of the Contract
- Community outreach as described in Section 6 (*Public Involvement*)

Design Builder may perform the following additional Work (collectively, "NTP1 Mobilization"):

- Mobilization of Design-Builder's personnel
- Demolition and hazardous material abatement of existing structures
- Formation of the Disputes Review Team
- Coordination with the Railroad
- Utility Adjustment coordination and design
- Utility potholing
- Environmental permitting support and coordination
- Materials for CCRFCD facilities
- Systems Integrator coordination
- Design survey
- Geotechnical investigation and engineering
- Sign inventory
- Community outreach
- Aerial mapping
- Participation in meetings and presentations with the Department; includes providing technical support and presentation materials

Design-Builder shall prepare and submit a list and cost of NTP1 Mobilization Work that will be done during the NTP1 period, for review and approval by the Department 10 days after issuance of NTP1. The Department will notify the Design-Builder within five Business Days after receiving the Submittal, if the NTP1 scope is approved or requires revision. If a revision is required, the Design-Builder must submit a revised NTP1 scope within three Business Days. The Department shall have three Business Days to review the revised NTP1 scope. If revision is again necessary, the three-Business-Day revision/review process will be repeated until a mutually acceptable NTP1 scope is achieved. The Department and the Design-Builder acknowledge that each party's requirements for the NTP1 Mobilization scope may differ; however, the Design-Builder must

provide the minimum services required in the Technical Provisions, to the degree that funds allow, in minimum NTP1 Mobilization Work.

Design-Builder may implement the other activities to support its work plan execution in accordance with Contract Section 4.1.2 and subject to Contract Section 12.1.4. Design-Builder must provide the Department with written notification prior to performing any Work in the Project Right-of-Way (ROW). Except as otherwise provided in this Section 1.1.5, the Department shall not be obligated to review any Submittals other than the deliverables described in items 1 through 8 in Table 1-1 until after the issuance of NTP2. Notwithstanding the above, the Department may accept and perform Design Reviews for Submittals during the period between NTP1 and NTP2, but only after satisfaction of the following conditions:

- Design-Builder has submitted and the Department has approved Design-Builder's Design Quality Management Plan (DQMP).
- Design-Builder has provided the Department Project Office space ready for occupancy by the Department's staff.

To expedite the ordering of the materials for the Construction ATM System, Design-Builder shall provide the Submittals described in Section 19.18.1 (*Early Construction ATM Submittals*) for the Construction ATM System. The Department will perform Design Reviews of the Construction ATM System Submittals during the period between NTP1 and NTP2 prior to the Department's approval of Design-Builder's DQMP.

1.1.6 Interim Milestones

To aid in reducing impacts to the traveling public during the Construction Work, the Department has identified the following Interim Milestone(s). These Interim Milestone(s) are established to complete various Construction Work associated with the Department's Project Infrastructure and Local Agency Project Infrastructure.

a. I-15 Department's Project Infrastructure
b. US 95 Department's Project Infrastructure
c. WS-Ramp (I-515 westbound to I-15 southbound) Department's Project Infrastructure
d. NE-Ramp (I-15 northbound to I-515 eastbound) Department's Project Infrastructure
e. Grand Central Parkway Local Agency Project Infrastructure

As an inducement to Design-Builder to achieve completion of these Interim Milestone(s), the Department has set an Interim Milestone Completion Incentive Payment if Design-Builder achieves the Interim Milestone Completion Duration(s). If Design-Builder fails to complete the Work required for an Interim Milestone Completion in less than or equal to the respective Interim Milestone Completion Duration(s), the Department shall assess Interim Milestone Completion Late Charges.

Interim Milestone Completion shall be when Design-Builder has achieved the Interim Milestone Traffic Opening as defined in Section 1.1.6.1 (*Interim Milestone Traffic Opening*) for the respective Interim Milestone. Design-Builder shall provide a Design Document Submittal including Plans for review, comment, and approval by the Department defining the facilities to be in place prior to Design-Builder's request for an Interim Milestone Traffic Opening.

1.1.6.1 Interim Milestone Traffic Opening

The Department may approve an Interim Milestone Traffic Opening when Design-Builder has completed the Construction Work of the Interim Milestone providing, at a minimum, the posted speed, the number of open travel lanes, auxiliary lanes, interchange ramp access, and turn lanes as set forth in this Section 1.1.6.1. In determining whether an Interim Milestone Traffic Opening has occurred, the Department will also consider and require satisfaction of the applicable criteria:

a. All major permanent safety features shall be installed and functional, such major safety features to include shoulders, guard rails, concrete traffic barriers, and bridge railings;

b. All temporary safety features are shall be installed and functional, including pavement marking and delineations, safety end treatments, terminal anchor sections, and crash attenuators;;

c. Permanent or temporary illumination is installed and functional;

d. Permanent or temporary signs and signals are installed and functional

e. The need for temporary traffic controls or for lane or shoulder closures at any time has ceased during the Peak Period, and;

f. Whether Design-Builder has otherwise completed the Work in accordance with the Contract Documents, such that the Interim Milestone infrastructure is in a condition that it can be used for normal and safe vehicular travel in all lanes and at all points of entry and exit, including bicycle and pedestrian access.

Construction Closures of lanes or shoulders shall not be allowed during the Peak Period following the Department's acceptance of an Interim Milestone Traffic Opening.

Roadway geometry changes such as realigning or shifting of lanes (revised lane striping) shall be prohibited for a period not less than 6 months except for final permanent striping, which will occur after the placement of final surface course.

Prior to the Department's acceptance of an Interim Milestone Traffic Opening, Design-Builder shall provide, at a minimum, the number of travel lanes, auxiliary lanes, interchange ramp access, and turn lanes open to vehicular traffic defined below.

1. I-15 Department's Project Infrastructure Interim Milestone:

    a. A minimum number of lanes open to vehicular traffic shall meet or exceed the existing I-15 configuration as of the Setting Date in both the northbound and southbound directions of travel.

    b. All interchange ramp access to and from Sahara Avenue shall be fully open to vehicular traffic. The minimum number of lanes for the ramps including acceleration, deceleration, and auxiliary lanes shall meet or exceed the existing interchange configuration as of the Setting Date.

    c. All interchange ramp access to and from Charleston Boulevard shall be fully open to vehicular traffic. The minimum number of lanes for the ramps including acceleration,

deceleration, and auxiliary lanes shall meet or exceed the existing interchange configuration as of the Setting Date.

d. All system interchange ramp access to and from I-15 and US 95/I-515 shall be fully open to vehicular traffic. The minimum number of lanes for the ramps including acceleration, deceleration, and auxiliary lanes shall meet or exceed the existing interchange configuration as of the Setting Date.

2. US 95 Department's Project Infrastructure Interim Milestone:

   a. A minimum number of lanes open to vehicular traffic shall meet or exceed the existing US 95 configuration as of the Setting Date in both the eastbound and westbound directions of travel.

   b. All interchange ramp access to and from Rancho Drive shall be fully open to vehicular traffic. The minimum number of lanes for the ramps including acceleration, deceleration, and auxiliary lanes shall meet or exceed the existing interchange configuration as of the Setting Date.

   c. All interchange ramp access to and from Martin Luther King Boulevard shall be fully open to vehicular traffic. The minimum number of lanes for the ramps including acceleration, deceleration, and auxiliary lanes shall meet or exceed the existing interchange configuration as of the Setting Date.

   d. All system interchange ramp access to and from I-15 and US 95/I-515 shall be fully open to vehicular traffic. The minimum number of lanes for the ramps including acceleration, deceleration, and auxiliary lanes shall meet or exceed the existing interchange configuration as of the Setting Date.

3. WS-Ramp (I-515 westbound to I-15 southbound) Department's Project Infrastructure Interim Milestone:

   a. All system interchange ramp access to and from I-15 and US 95/I-515 shall be fully open to vehicular traffic. The minimum number of lanes for the ramps including acceleration, deceleration, and auxiliary lanes shall meet or exceed the existing interchange configuration as of the Setting Date.

4. NE-Ramp (I-15 northbound to I-515 eastbound) Department's Project Infrastructure Interim Milestone:

   a. All system interchange ramp access to and from I-15 and US 95/I-515 shall be fully open to vehicular traffic. The minimum number of lanes for the ramps including acceleration, deceleration, and auxiliary lanes shall meet or exceed the existing interchange configuration as of the Setting Date.

5. Grand Central Parkway Local Agency Project Infrastructure Interim Milestone:

   a. A minimum number of travel lanes, auxiliary lanes, and turn lanes open to vehicular traffic as defined in Section 9.3.4 (*Local Infrastructure*) for the Western Avenue and Grand Central Parkway connection beginning at Oakey Boulevard to the northerly limits of Grand Central Parkway.

b. Pedestrian and bicyclist facilities open to unrestricted access.

It is anticipated the Construction Work associated with the asphaltic concrete friction course (crumb rubber), described in Section 10 (*Pavement*) and permanent pavement markings will be completed after Interim Milestone Traffic Openings.

Design-Builder shall submit a Released-for-Construction Design Submittal for all Interim-Milestones defining the elements of the Interim-Traffic Opening for review and acceptance by the Department.

1.2 Project Requirements

All Work performed or furnished under the Contract Documents shall comply with the requirements of the Contract Documents, including the Project Standards, these Technical Provisions, and Good Industry Practice.

1.2.1 Local Infrastructure

Design-Builder shall design and construct the Local Agency Project Infrastructure that is owned, operated, or maintained by the City of Las Vegas in accordance with Section 26.3 (*City of Las Vegas Standards*) unless otherwise modified by these Technical Provisions. The Department will interface with the City of Las Vegas with respect to Design Reviews and Oversight of Construction Work, and Design-Builder shall coordinate with the Department in accordance with the provisions of the Contract Documents.

Design-Builder shall design and construct the Local Agency Project Infrastructure of third parties other than the City of Las Vegas in accordance with Section 26.4 (*Miscellaneous Specifications and Standards*) unless otherwise modified by these Technical Provisions.

1.2.2 Future Improvement Phases

The Department and the City of Las Vegas are planning for Future Improvement Phases to complete the ultimate build-out infrastructure within or adjacent to the Project. The Department's future improvements "*I-15 Freeway Future Improvements"* described in Section 9.3.2.3 (*I-15 Freeway Future Improvements*) are proposed to increase capacity, and to improve traffic operations and safety related to the I-15 freeway system. The City of Las Vegas' future improvements "*Local Future Improvements"* described in Section 9.3.4.1 (*Local Future Improvements*) are proposed to enhance local roadway connectivity, and to improve traffic operations and safety related to the local street network. The RID titled *Exhibit 2, I-15 Freeway Future Improvements*, illustrates the general limits of the I-15 Freeway Future Improvements and Local Future Improvement Phases.

1.2.2.1 Future Improvement Compatibility

Design-Builder shall endeavor to minimize "throwaway" costs associated with improving the Project to meet the requirements of the Future Improvement Phases infrastructure. Additionally, Design-Builder's Work for the Project shall minimize the costs to the Department associated with the Future Improvement Phases infrastructure to the extent reasonably possible without unreasonably increasing Project costs.

Design-Builder's design for the Project shall allow for the compatibility and integration of the I-15 Freeway Future Improvements and the Local Future Improvements phases without the need for demolition, relocation, or reconstruction of the Department's Project Infrastructure and the Local Agency Project Infrastructure, including new bridges, retaining walls, CCRFCD facilities, overhead sign bridges, the Railroad's tracks, Las Vegas Valley Water District 36-inch pipeline, and NV Energy transmission facilities including vertical transmission line encroachments. Design-Builder's Work shall allow for the Future Improvement Phases infrastructure to be located within the Project ROW and/or the Future Improvement Phases Planned ROW illustrated in *Exhibit 2, Future Improvements* of the RIDs, without the need for the Department to acquire additional ROW to accommodate the Future Improvement Phases. Setback or offsets from the future physical infrastructure to ROW for Future Improvement Phases shall be in accordance with Project Standards.

In addition, the following elements shall be addressed by Design-Builder's design for the Project to demonstrate compatibility, integration, and the endeavor to minimize "throwaway" costs and minimize the cost associated with the Future Improvement Phases infrastructure:

- The Department anticipates minor demolition of bridges to allow for future widening as part of the Future Improvement Phases. However, the need for demolition or reconstruction of Project abutments, girders, or piers will be deemed by the Department as not minimizing "throwaway" cost.
- Future reconstruction or new construction of the CCRFCD facility infrastructure north of Charleston Boulevard exceeding 800 lineal feet will be deemed by the Department as not minimizing the Future Improvement Phases cost.
- Retaining walls for the Project shall be designed and constructed to support the embankment height above the wall for the Department's Project Infrastructure or the embankment height above the wall in the Future Improvement Phases, whichever is greater. Removing and reconstructing retaining walls to accommodate an increase in wall height will be deemed by the Department as not minimizing "throwaway" cost or minimizing the Future Improvement Phases cost.
- Relocation of the NVE transmission facilities southeast of Sahara Avenue is anticipated by the Department to accommodate the I-15 Freeway Future Improvements. Relocation of the NVE transmission towers is planned to be within the Future Improvement Phases ROW illustrated in *Exhibit 2, Future Improvements* of the RIDs. Relocation of the NVE facilities beyond the Future Improvement Phases ROW will be deemed by the Department as not minimizing the Future Improvement Phases cost.

If Design-Builder's design for the Project results in modifications of the preliminary roadway geometry, lane configurations, the CCRFCD facilities, or ROW limits from what is shown in the Reference Design, Design-Builder shall submit preliminary Plans for both the Project and the Future Improvement Phases in accordance with Section 9.5.1 (*Stage 1 Design*) demonstrating future improvement compatibility of Design-Builder's design in accordance with this Section 1.2.2. If Design-Builder's design for the Project results in modifications of the preliminary roadway geometry, lane configurations, the CCRFCD facilities, or Project ROW limits from what is shown in the Project Neon Future Phase Preliminary Design, Design-Builder shall submit preliminary Plans for both the Project and Future Improvements Phases in accordance with Section 9.5.1 (*Stage 1 Design*) demonstrating future improvement compatibility in accordance with this Section 1.2.2.

1.2.3 Federal Highway Administration (FHWA) Oversight and Agreements

The role of the Federal Highway Administration (FHWA) on the Project shall be as defined in Section 3.6 of the Contract.

1.2.4 Control of Materials

Design-Builder's procurement and use of products for the Project is limited to those listed in the Department's Qualified Products List (QPL) as of the Setting Date. A QPL may be obtained from the Department's Administrative Services, 1263 S. Stewart Street, Room 101, Carson City, Nevada 89712, phone (775) 888-7070. The QPL is a list of manufactured products available on the market that have been evaluated and determined to be suitable for a specified use. Products listed in the QPL shall be restricted to use in the category for which they are listed and shall be installed as recommended by the manufacturer. The manufactured products furnished by Design-Builder shall conform to the manufacturer specifications.

For Local Agency Project Infrastructure as described in this Section 1, Design-Builder shall provide materials for drainage in accordance with Section 8 (*Drainage*), for wastewater infrastructure in accordance with Section 18 (*Utilities*), in accordance with Section 15 (*Signals and Lighting*) and Section 16 (*Signs and Pavement Markings*), and in accordance with Attachment 26-2 (*City of Las Vegas Special Provisions*).

Proposed Deviations of any products or materials set forth in the Department's QPL as of the Setting Date shall be submitted in accordance with and governed by Section 2.1.2.4 of the Contract.

1.2.5 Coordination

Design-Builder is solely responsible for coordinating all Design and Construction Work, including that of any of its Subcontractors, with other designers, subcontractors, the Utility Owners, Governmental Entities, Department personnel, private businesses, and other operating personnel concerning Site access, the establishment and use of temporary facilities, work schedules, and other elements of the specified Work that require interface with others.

1.2.6 Coordination with Other Work

The Department or other agencies may have separate projects active within the vicinity of the Project that are not part of the Project. A tentative list is provided in Attachment 01-1 (*Tentative List of Concurrent Projects Adjacent to the Project*). Design-Builder shall be solely responsible for identifying any and all construction projects that will be active in the vicinity of the Project. Design-Builder shall coordinate its activities with the construction work of all other projects in the vicinity of the Project. Delays arising from coordination issues shall not be considered a Department-Caused Delay, except to the extent otherwise provided in the Contract.

1.2.7 Safety and Health

Design-Builder shall comply with the safety and health requirements described in Attachment 01-2 (*Safety and Health – Safety Plan*) through the Final Acceptance of the Project. As a component of the PMP, Design-Builder shall prepare Safety Plans for the Project Work as described in Attachment 01-2. Design-Builder shall implement and comply with these provisions or as updated

through Final Acceptance of the Project. Design-Builder's Safety Plans shall also address the elements described in Section 6.3.8 *(Emergency, Unforeseen Utility Disruptions, Hazardous Conditions, Traffic Emergencies, Security, and Loss-of-Access Notifications)*. The Submittal schedule for these plans is included in Attachment 01-3 (*Project Management Plan*).

1.2.8 Reference Information Documents

Refer to Section 1.9 of the Contract for a discussion of the purpose and use of the RIDs.

1.2.9 Biological and Physical Hazards

Prior to the commencement of Construction, Design-Builder shall undertake an initial cleanup of the Project area, including all preparatory work required to make the Project area sanitary and safe in accordance with applicable Government Rules and the health hazards plan and to address all biological and physical hazards present. Design-Builder shall provide the required training of personnel, onsite and offsite preparations, and safety equipment to complete the initial cleanup and disposal of the biological and physical hazards. Design-Builder shall inspect the area at least 72 hours in advance of commencing Work to determine the type of cleanup and removal effort required**.**

1.2.10 Deviations to the Technical Provisions

Design-Builder may submit proposed Deviations to these Technical Provisions to the Department if Design-Builder has concluded that the Deviation will be beneficial. Proposed Deviations shall be submitted in accordance with and governed by Section 2.1.2.4 of the Contract. Deviation requests to the Technical Provisions shall include:

a. A description of the Deviation or other appropriate descriptive information.

b. References to requirements of the Technical Provisions, an explanation of the nature of the Deviation from said requirements, and a request for approval of such Deviation.

c. An analysis justifying why the Deviation from the requirements of the Technical Provisions should be allowed.

d. The locations where, and an explanation of how, the Deviation will be used on the Project.

e. Any changes in routine or capital maintenance requirements associated with the Deviation, including ease of maintenance.

f. Any changes in the anticipated service life of the item(s) affected by the Deviation.

g. Any reduction in the time period necessary to design and construct the Project resulting from implementing the Deviation, including, as appropriate, a description of methods and commitments.

h. A preliminary analysis and quantitative discussion of potential impacts on vehicular traffic (both during and after construction), environmental permitting, community impact, safety, and life-cycle Project and infrastructure costs, including impacts on the cost of repair, replacement, maintenance, and operation.

i. A description of any impacts on the land or facilities of third parties, including private owners, Governmental Entities, Utility owners, and railroads.

j. If and what additional ROW will be required to implement the Deviation; Design-Builder shall (i) be solely responsible for the costs of acquisition of any such ROW and the costs for obtaining any necessary Environmental Approvals, (ii) not be entitled to any Change Order for time or money as a result of Site conditions (e.g., Hazardous Materials, Differing Site Conditions, Geotechnical Issues, Utilities, etc.) on such additional ROW, and (iii) not be entitled to any Change Order for additional time or money as a result of any delay, inability, or cost associated with the acquisition of such ROW.

k. A description of other projects where the Deviation has been used; the degree of success or failure of such usage; and names and contact information, including phone numbers and e-mail addresses for project owner representatives that can confirm such statements.

l. A description of added risks to the Department or third parties associated with implementing the Deviation.

m. An estimate of any additional Department, Design-Builder, and third-party costs associated with implementation of the Deviation.

n. An estimate of the Contract Price adjustment, should the Deviation be approved.

o. An estimate of the schedule adjustment, should the Deviation be approved.

p. An analysis of how the Deviation is equal to or better in quality, performance, and reliability than the requirements of the Technical Provisions.

1.2.11 Request for Information

Requests for Information (RFIs) may be initiated by Design-Builder, the Department, or Local Agencies. Design issues may arise in ongoing Work reflected in Release for Construction Packages. The RFI initiated by Design-Builder must reflect the general nature, location, and description of the issue, Design-Builder's proposed mitigation with supporting documentation of the issue, and Quality Manager's approval of such mitigation. The Department will transmit identified issues in writing to Design-Builder summarizing the general nature, location, and description of the issue for incorporation into the RFI process.

When an issue or change arises, including those identified by the Department-prepared RFIs, Design-Builder must place the RFI in a log to track all open issues and submit the RFIs and updated log for review by the Department. The Department will provide Design-Builder with an RFI for issues identified by the Department or Local Agencies. Design-Builder shall provide an independent and unique numbering system for RFIs initiated by Design-Builder to differentiate from those initiated by the Department.

1.3 Construction Requirements

1.3.1 General Requirements

The Department's Standard Specifications shall govern all Construction Work except as otherwise modified by these Technical Provisions.

1.3.2 Documentation of Site

Prior to issuance of NTP2, Design-Builder shall document the existing conditions within the Site, including videotaping the whole Project. Documentation must include adjacent roadways, drainage channels or flowing waterways, manholes, fences, signage, walls, houses, buildings, wells, and sensitive habitats. Special attention will be given to all adjacent facilities and Utilities that may be impacted by the Work's operations and to the documentation of downstream drainage channels, adjacent roadway conditions, and sensitive habitats. The videotape must show details of the condition of all adjacent properties and structures, pavement conditions of crossroads, and proposed and potential haul routes. Provide suitably referenced, dated, and narrated copies in duplicate to the Department. Design-Builder shall also videotape all roadway facilities within one-half mile beyond the Site before the start of Construction Work to document existing conditions.

At commencement of Construction Work, and every month following through Final Acceptance, furnish videotape of construction activities and two sets of at least 500 digitally produced photographs, at a minimum, covering the following:

- All adjacent properties and building details
- Project Work reflecting the activities underway during the month
- Project Work any time that a new significant activity starts
- Any accidents, unusual conditions, and complaints

Vantage points and proposed timelines for photographs shall be coordinated with the Department.

Design-Builder shall submit digital photographs in accordance with Section 1.6.2 (*Document Management*). Digital images shall be provided in JPEG or uncompressed TIFF format, produced by a digital camera with a minimum sensor size of 8.0 megapixels and at an image resolution of not less than 1024 by 768 pixels. Each photograph will have an associated date and time, along with a short annotation providing the approximated position of the viewer, view direction, and activity.

Furnish video footage in triplicate copies in digital versatile disc (DVD) format in accordance with Section 1.6.2 (*Document Management*), on at least a monthly basis, and provide this footage to the Department upon request.

At commencement of construction and every 90 days, Design-Builder shall submit aerial photographs reflecting areas of the Site where Work is in progress.

Obtain all necessary permission from property owners to enter their property for any documentation of the Site.

Photographs and videos to facilitate public information are described in Section 6.3.11 (*Construction Progress Photographs and Videos*).

1.3.3 Limitations to Construction

To address the Project's various commitments including environmental, public, business, emergency response, and safety for the public; maintain stakeholders' trust; and uphold the Department's integrity, Design-Builder shall accommodate and provide Work including but not limited to the following activities as described in these Technical Provisions.

- Perform demolition on properties within the Site only after receipt of ROW Certification for each parcel as indicated in Section 21.5 (*Property Demolition*). Do not disturb or begin demolishing existing structures prior to performing asbestos assessment and abatement as described in Section 7.8 (*Hazardous Materials*).

- Provide emergency pullouts as described in Section 12.4.2 (*Design Parameters for Traffic Control Plans*) during Construction Work.

- Screen visual sight of the Construction Work from commercial businesses as described in Section 12.5 (*Construction Requirements*), through Substantial Completion.

- Construct the L&A Work adjacent to residential neighborhoods within 30 days of completion of the roadway infrastructure.

- Facilitate unimpeded access to reduce delays through the Site for emergency responders and law enforcement during Construction Work.

- Allow unimpeded access to and from Las Vegas Fire Rescue Station 10 to the local street network east and west of the I-15 corridor during Construction Work. Coordinate with Las Vegas Fire Rescue to minimize response delays due to traffic congestion caused by Construction Work. Address the Las Vegas Fire Rescue Station 10 access plan as part of the Transportation Management Plan (TMP).

- Maintain unimpeded access to the University Medical Center emergency entrance during Construction Work. Coordinate with the University Medical Center to minimize disturbances to access during Construction Work. Address the University Medical Center access plan as part of the TMP.

- Coordinate with the Southern Nevada Health District, located at 400 Shadow Lane, to minimize disturbances to access during Construction Work. Address the Southern Nevada Health District access plan and restrictions as part of the TMP.

- To inform Project Stakeholders of Construction Work activities, provide Construction Work phasing notifications in accordance with Section 6 (*Public Involvement*). Address the content, format, frequency, and distribution of these notifications as part of the TMP.

- Construction Work within 100 feet of the Project ROW adjacent to the residential neighborhoods between Sahara Avenue and Charleston Boulevard shall be restricted to occur between 6:00 AM and 8:00 PM Monday through Friday.

- Construction Work within 300 feet of the Project ROW adjacent to the Presbyterian Church, located at 1515 West Charleston Boulevard shall not occur between 8:00 AM and 2:00 PM Sundays. Coordinate with the Presbyterian Church officials to establish other days and times where reducing Construction-Work-related noise would reduce impacts and address this as part of the TMP. Provide specific signing to the Presbyterian Church accesses during Construction Work.

- To minimize disruptions to businesses within the Site, schedule and coordinate Construction Work impacting business approaches, accesses, driveways, and pedestrian facilities to occur during night hours between 10:00 PM and 6:00 AM. Provide business-specific detour signing to aid motorists for changes in business access during Construction Work through Substantial Completion. Coordinate tie-in conditions with all properties adjacent to the project.

- Access from Charleston Boulevard to the businesses at the historic Holsum Lofts properties, 241 West Charleston Boulevard, shall be unimpeded at all times during Construction Work through Substantial Completion. Address the property access plan as part of the TMP. Provide a temporary parking area adjoining and immediately south of the property that is adequate to accommodate 24 passenger vehicles. The parking area shall be constructed of a hard surface asphalt pavement and parking stalls defined with permanent pavement markings. Maintain the temporary parking area in accordance with Section 20 (*Maintenance Requirements*) through Substantial Completion. Provide specific signing to the Holsum Lofts access during Construction Work.

- Provide a staging and parking area near the Site for Design-Builder's and Subcontractors' staff. Parking of construction equipment or materials on adjacent Local Agency residential roadways is prohibited. Parking of Design-Builder's and Subcontractors' company or personnel vehicles on adjacent Local Agency residential roadways is prohibited.

- Minimize disruptions to the community by addressing equipment storage/staging, the use of residential streets, and haul routes to the Site as described in Section 12 (*Maintenance of Traffic*) during Construction Work.

- Maintain the roadways within and adjacent to the Site in a clean and orderly appearance as described in Section 20 (*Maintenance Requirements*).

- Remove and dispose of the stockpiled material along the south side of US 95/I-515 between the I-15 interchange and North City Parkway. The Department has determined the material is unsuitable for use in the Project. Design-Builder shall remove the material to Elevation 2058 and dispose of it outside of the Project Site. Design-Builder shall shape the top of the remaining embankment to form a crown with 2 percent cross slopes such that surface runoff is directed as it was under pre-Project conditions. Also refer to Section 5.3.9 (*Groundplane*) for landscape and aesthetic requirements.

1.4 Quality Control Requirements

Refer to Section 2 (*Quality Management System*), Section 3 (*Design Quality Management*), and Section 4 (*Construction Quality Assurance, Quality Control, and Oversight*) for quality assurance (QA) and quality control (QC) requirements.

1.5 Project Management Plan

Design-Builder shall provide to the Department a PMP in accordance with the structure provided in Attachment 01-3 *(Project Management Plan)*. Design-Builder's project management effort shall be defined by and follow the PMP, which is a collection of several management plan elements describing discrete elements of the Work. The Department shall have approval rights over the PMP and each component part of the PMP, unless expressly stated otherwise in these Technical Provisions. The PMP is an umbrella document that describes Design-Builder's managerial approach, strategy, and quality procedures to design and build the Project and achieve all requirements of the Contract Documents.

The structure, submittal timeframes, Department review and, as applicable, approval rights regarding each component part of the PMP are specified in Attachment 01-3. Table 1-2 provides a general outline of the PMP.

Table 1-2 PMP Outline

PMP Chapter	Chapter Title
1	Project Administration
2	Quality Management System
2A	Design Quality Management Plan
2B	Construction Quality Management Plan
3	Environmental Management
4	Public Involvement Plan
5	Safety Plan
6	Communications Plan
7	Transportation Management Plan
8	Preliminary L&A Plan

A list of documents to be included in the PMP is contained in Attachment 01-3; related requirements for the component parts appear throughout these Technical Provisions

Design-Builder shall propose updates to the PMP and, as applicable, affected components in the event of the following:

- The occurrence of any changes to Key Personnel, Quality Plan, Safety Plan, Project Schedule, or Project administration policies and procedures.
- The occurrence of other changes necessitating revision to the PMP.
- As otherwise directed by the Department.

Design-Builder shall provide the revised PMP to the Department for approval no later than 14 days after the occurrence of the change or direction triggering the need for the revisions to the PMP.

The Department will audit and monitor the activities described in the PMP to assess Design-Builder performance. All commitments and requirements contained in the PMP shall be verifiable.

1.6 Project Administration

As part of the PMP, Design-Builder shall provide to the Department the items listed in Attachment 01-3 (*Project Management Plan*) for administration of the Project and as defined in this Section 1.6.

1.6.1 Project Schedule

Design-Builder shall provide a Project Schedule in accordance with Attachment 01-4 (*Project Schedule*) and as supplemented by this Section 1.6.1. The Project Schedule shall be used by the Parties for planning and monitoring the progress of the Work.

1.6.1.1 Required Submittals

1.6.1.1.1 Project Baseline Schedule

The Preliminary Project Baseline Schedule and the Project Baseline Schedule shall conform to the "Project Schedule" requirements set forth in Attachment 01-4 (*Project Schedule)*. The Department will review the Project Baseline Schedule in accordance with Attachment 01-4. Design-Builder shall use Oracle Primavera P6, release 6.2 or higher.

Updates to the Project Baseline Schedule shall occur no more frequently than on 3 month intervals. The Department will review, comment, and have discretionary approval of each updated Project Baseline Schedule.

1.6.1.1.2 Project Status Schedule Updates

Design-Builder shall submit to the Department Project Status Schedule updates to reflect the current status of the Project, including recovery schedules, schedule revisions due to approved Change Orders. The monthly Project Status Schedule shall conform to the requirements set forth in Attachment 01-4 (*Project Schedule)*. Design-Builder shall submit the first month's Project Status Schedule to the Department by the seventh day of the month following approval of the Project Baseline Schedule. Each succeeding month's Project Status Schedule shall be submitted by the seventh day of each succeeding month. The Project Status Schedule data date shall be the last date of the month before submittal. The Critical Path shall not include any actual start or actual finish dates later than the date for any activity. If the seventh day of an individual month is a Saturday, Sunday, or a holiday on which Work has been suspended, the monthly Project Status Schedule shall be submitted by the first Business Day following the seventh day. If the Project Status Schedule is not submitted by the required date, the Department may withhold or adjust the Final Payment.

1.6.1.1.3 Not Used

1.6.1.1.4 Progress Report

Each month, beginning with the first full month after NTP1 and until Substantial Completion, Design-Builder shall submit to the Department a Progress Report for review and comment. Design-Builder shall submit the Progress Report on or before the close of business 7 days following each month's end. An electronic and a printed copy of the entire Progress Report shall be submitted to the Department.

The Progress Report shall consist of the following:

a. Describe progress for the Project as a whole (including all phases of Work), identify start date and completion dates on major areas of Work, and group the information based on the work breakdown structure (WBS).
b. List any Change Orders that were identified or executed during the period, and include their status.
c. Identify any pending or resolved Claims during the reporting period.
d. Identify schedule activities planned for the upcoming period.
e. Identify problems and issues that arose during the reporting period and issues that remain to be resolved.

f. Summarize resolution of problems/issues raised in previous progress reports or resolved during the reporting period.

g. Statement of the number of days Construction Work has occurred within the Site.

h. Statement of the number of days utilized for all Permitted Closures.

i. Statement of the number of days to the Interim Milestone Completion(s).

j. Identify Critical Path issues and proposed resolution.

k. Include a report on the Project Schedule completion deadlines showing the schedule dates for the immediate prior month and current month. A narrative is required to explain why the dates have changed for variances of more than 30 days.

l. Provide monthly expenditure projection curves for the Project.

m. Identify requested and/or required Department actions for the next month.

n. Provide a summary of QA/QC findings.

o. Include digital progress photographs that accurately depict Project progress and a corresponding progress narrative.

p. Include a report providing the Department with an updated list of Project personnel, organization chart, and emergency contact information.

q. Design-Builder shall specifically identify participation of Disadvantaged Business Enterprises (DBEs) in the report in accordance with Section 7.1.8 of the Contract.

The Project Status Schedule Update shall be provided as part of the Progress Report including two electronic copies and the following printouts:

a. Gantt chart sorted by Work areas indicating the physical status of all Project Schedule activities as of the date of the update and comparing the Design-Builder's progress to planned progress.

b. Gantt chart showing all critical Project Schedule activities, sorted by early start dates.

c. Ninety-day look-ahead Gantt chart showing all upcoming Submittals from the Design-Builder and approvals required by the Department.

d. Ninety-day look ahead Gantt chart grouped by WBS and sorted by early start dates.

e. Gantt chart that clearly identifies the longest path sorted by early start dates.

If requested by the Department, Design-Builder shall make all corrections to the monthly Progress Report and resubmit. If Design-Builder does not agree with the Department's comments, Design-Builder shall provide written notice of disagreement within 7 days from the receipt of the comments.

1.6.1.1.5 As-Built Schedule

The "as-built schedule" shall be the Final Critical Path Method (CPM) Schedule containing actual start and finish dates for every Work activity. The Final CPM Schedule shall be submitted no later than 30 days before Final Acceptance. The Final CPM Schedule shall depict the actual start and finish dates for each activity. The completion date of the Final CPM Schedule shall be the date of Final Acceptance.

1.6.1.2 Revisions

If it becomes necessary to add, combine, eliminate, or modify Completion Deadlines or schedule activities to reflect modifications to the Work, such changes shall be made through a Change Order that has been issued by the Department, and therefore reflected in the Project Schedule. Revisions to the Project Schedule and consequent realignment of funds between payment activities may be requested by Design-Builder in accordance with, and subject to, Sections 4.5 and 13 of the Contract.

1.6.1.3 Time Impact Delay Analysis

As part of a request for a change as set forth in Section 13.4.2.3 of the Contract, Design-Builder shall submit to the Department a written time impact delay analysis illustrating the influence of each claimed relief event. Each time impact analysis shall include a fragmentary network demonstrating how Design-Builder proposes to incorporate the change, delay, or Design-Builder request into the current Project Status Schedule.

The time impact analysis shall demonstrate the time impact to each affected schedule activity in the most recent Project Status Schedule at the time of the occurrence.

The time impact analysis submittal shall include the details of the change, including added, changed, or deleted data for schedule activities and logic. If the current Project Status Schedule is revised subsequent to submittal of a time impact analysis but before its approval, Design-Builder shall promptly indicate in writing to the Department the need for any modification to its time impact analysis.

Design-Builder shall submit one printed Gantt chart including all schedule activities affected by the time impact analysis, grouped and sorted by WBS and compared to the current Project Baseline Schedule. In addition, Design-Builder shall provide one electronic backup of the Project Schedule with the time impact analysis and a comprehensive narrative for each relief request. Design-Builder shall incorporate the results of the relief event determination from the Department into the Project Status Schedule for the next Progress Report.

1.6.1.4 Recovery Schedule

If the Work is delayed on any Controlling Work Item for a period that exceeds the greater of either 30 days in the aggregate or that number of days in the aggregate equal to 5 percent of the days remaining until Substantial Completion, the next Project Status Schedule shall include a recovery schedule demonstrating the proposed plan to regain lost Project Schedule progress and to achieve Substantial Completion by the specified date. Design-Builder's recovery schedule shall include a revised network diagram and an analysis showing the proposed revised schedule.

1.6.2 Document Management

As part of the Work, Design-Builder shall develop and provide a system for document management for the Project. Design-Builder shall establish and maintain an Electronic Document Management System (EDMS) to store, catalog, and retrieve all Books and Records and data using the applicable control section job numbers for the Work.

In the provision of a document management system, Design-Builder shall:

1. Use data systems, standards, and procedures compatible with those employed by the Department, and implement any new operating practices required as a result of the Department's amendments to any such systems, standards, and procedures.
2. Provide a secure location for any interface as may be provided by the Department, such that only authorized users have access and it is protected from loss theft, damage, and unauthorized or malicious use.
3. Employ appropriate standards and procedures, and train Design-Builder personnel to operate any Department data management system that the Department may require in connection with the Project.
4. Train the Department personnel to operate any Design-Builder data management system approved by the Department for Design-Builder use in connection with the Project.
5. Provide a mechanism for the electronic transfer of meta-data, including but not limited to the associated portable document format (PDF) images and other file formats for uploading into an EDMS employed by the Department.
6. Provide the Department with procedures and software for accessing all project-related documents as a component of Design-Builder's obligations under Section 21 of the Contract.
7. All electronic information submitted to the Department shall be searchable and legible.

In Part 1 of the PMP, Design-Builder shall describe:

1. Methods by which all Project-related documents will be uniquely coded and retrievable in a user-friendly format.
2. The routing, filing, control, and retrieval methods to be used for all documents.
3. Methods to facilitate sharing of data, including procedures and software for accessing all project-related documents.
4. All documents and data elements that will support records. These data elements shall include, as a minimum: document class, document type/subtype, document name, form number, the Department records series item number, the Department agency item number, the Department records series title, the Department retention period, turnover media, turnover frequency, submission type, special requirements, and remarks.

To allow for disaster recovery, Design-Builder shall back up and store all Project-related documents in a secure offsite area. Design-Builder shall perform and provide the Department with the results of regular tests of backup and restore functions.

1.6.3 Key Personnel

Design-Builder shall provide Key Personnel in accordance with Section 7.6 of the Contract. Refer to Section 7.6.5 of the Contract for information regarding time-commitment requirements for Key Personnel and the Department's rights regarding Key Personnel, and Section 1.6.6 (*Project Office*) for location requirements. Minimum qualifications for the specified Key Personnel are described below.

Project Manager shall have a minimum of 20 years of experience managing complex infrastructure projects, 10 years of experience managing the design and construction of major urban freeway systems, and professional experience in design-build project management of major urban freeway systems.

Deputy Project Manager shall have a minimum of 15 years of experience managing complex infrastructure projects, 10 years of experience managing the design and construction of major urban freeway systems, and professional experience in design-build project management of major urban freeway systems.

Construction Manager shall have a minimum of 15 years of experience managing complex infrastructure projects, 10 years of experience managing the construction of major urban freeway systems, and professional experience in design-build construction management of major urban freeway systems.

Lead Engineer shall be a Registered Professional Engineer or be one prior to the Department's approval of the PMP, with a minimum of 15 years of experience managing the design of complex infrastructure projects, 10 years of professional experience in managing the design of major urban freeways, and professional experience in managing the design of design-build urban freeway system projects.

Public Information Coordinator shall have at least a Bachelor of Science (B.S.) or Bachelor of Arts (B.A.) degree and significant demonstrated experience related to the areas of responsibility for public involvement for major transportation construction projects similar in nature to the Project. The Public Information Coordinator must have experience in managing others in community involvement activities and experience with major freeway projects and shall/must have experience with highway engineering drawings and concepts and working cooperatively and effectively with design engineers and construction staff.

Quality Manager shall have experience in a similar role on a complex freeway project of similar scope to the Project and shall have successfully completed an ISO 9001 Lead Auditor Course or have completed one prior to any Design Work.

Environmental Compliance Manager (ECM) shall have prior experience with permitting and managing the environmental monitoring on a complex freeway project of similar scope to the Project and shall have successfully completed an ISO 9001 Lead Auditor Course or have competed one prior to any construction Work. ECM shall be Certified Professionals in Erosion and Sediment Control. ECM shall have at least a B.S. or B.A. degree and significant demonstrated experience related to the areas of responsibility for environmental compliance for major transportation construction projects similar in nature to the Project. The ECM shall have experience in managing others in environmental activities and experience with similar scope to the Project. Shall/must have experience with highway engineering drawings and concepts and working cooperatively and effectively with design engineers and construction staff.

Traffic Control Engineer shall be a Registered Professional Engineer or be one prior to the Department's approval of the PMP and shall have a minimum of 10 years of professional experience in traffic and highway engineering with engineering consultants or government transportation agencies, and knowledge of traffic signal timing, construction traffic control on freeways, construction work zone traffic safety, the Manual on Uniform Traffic Control Devices (MUTCD), computer traffic simulation and optimization models, and freeway traffic management techniques.

Utilities Design/Construction Coordinator shall have a minimum of 10 years of professional experience in managing Utility coordination on complex infrastructure projects both during design and construction, and have a minimum of 5 years of professional experience in managing Utility coordination of major design-build urban freeways.

Safety Manager shall have significant demonstrated experience in a work zone safety technician or supervisor capacity on large highway construction projects including a minimum 10 years of progressive heavy construction experience, 5 years of which must be safety management experience. The Safety Manager shall have significant demonstrated experience in a work zone safety technician or supervisor capacity on large highway construction projects. The Safety Manager shall be a Work Zone Safety Supervisor as certified by the American Traffic Safety Service Association, Associated Contractors of Nevada, or any agency or firm approved by the Department. The Safety Manager shall have completed training and current certification for CPR and First Aid.

Structures Lead Design Engineer shall be a Registered Professional Engineer, or be one prior to the Department's approval of the PMP, with a minimum of 15 years of professional experience in bridge design and recent demonstrated experience in coordination of design of multiple bridge projects. The Structures Lead Design Engineer shall have demonstrated design experience with all proposed bridge types contained within the Proposal.

1.6.4 Lead Personnel Qualifications

In addition to Key Personnel, Design-Builder shall provide the lead personnel described in this Section 1.6.4. Design-Builder shall submit the qualifications for these additional leading personnel demonstrating compliance with the requirements of this Section 1.6.4 to the Department for its review and comment. The qualifications shall be submitted at the same time as its submittal of the PMP for the Department's review and comment. The submittal of these additional leading personnel qualifications are separate from, and not a requirement of, the PMP. These additional leading personnel shall be located in the Project Office as defined in Section 1.6.6.3 (*Design-Builder Personnel and Functions to be Located at the Project Office*).

1.6.4.1 Responsible Engineer(s)

Design-Builder's Responsible Engineer(s) shall be a Registered Professional Engineer with a minimum of 15 years of demonstrated expertise in urban freeway design with similar complexity as the Project. The obligations of Responsible Engineer(s) are described in Section 3.2.3 (*Responsible Engineer)*.

1.6.4.2 Design Quality Manager

Design-Builder's Design Quality Manager (DQM) shall be a Registered Professional Engineer in civil engineering having experience in a similar role on a complex freeway project of similar scope to the Project and shall have successfully completed an ISO 9001 Lead Auditor Course.

1.6.4.3 Construction Quality Manager

Design-Builder's Construction Quality Manager (CQM) shall have experience in a similar role on a successful project of similar scope and have successfully completed an ISO 9001 Lead Auditor Course. The obligations of the CQM are described in Section 4.5.1 (*Construction Quality Manager*).

1.6.4.4 Structures Construction Manager

Design-Builder's Structures Construction Manager shall have a minimum of 10 years and recent demonstrated expertise in bridge construction. The Structures Construction Manager shall have demonstrated construction experience with all proposed bridge types contained within the Proposal.

1.6.4.5 Landscape Architect

Design-Builder's Landscape Architect shall have a minimum of 10 years of experience and Landscape Architecture licensure, including a minimum 3 years of licensure in the State of Nevada. The Landscape Architect shall have a minimum of 5 years of task lead responsibility and experience on freeway/highway corridor design and construction projects in the arid southwest United States, and/or with 5 years of landscape architecture design and construction experience in the Las Vegas metropolitan area. The obligations of the Landscape Architect are described in Section 3.2.5 (*Landscape Architect)*.

1.6.4.6 Arborist

Design-Builder's arborist shall be an International Society of Arboriculture (ISA) board-certified master Arborist. The obligations of the arborist are described in Section 5 (*Landscape and Aesthetics*).

1.6.4.7 Landscape and Aesthetics Construction Manager

Design-Builder's L&A Construction Manager shall have a minimum of 10 years and recent demonstrated expertise in L&A construction specific to the L&A Work proposed for the Project. Design-Builder's L&A Construction Manager may meet this requirement with two managers who each have 10 years and recent demonstrated expertise in either landscape or aesthetics Work proposed for the Project.

1.6.4.8 System Integrator Manager

The project manager of the system integrator firm responsible for the Work shall have the following minimum qualifications:

- B.S. or B.A. degree in electrical engineering, electronic engineering, computer science, mathematics or related discipline.
- Experience implementing ITS systems involving computer and communications hardware, software, and firmware.
- Ability to participate directly in the integration of hardware, software, and communication elements.
- Proficiency in software/hardware implementation, configuration, and troubleshooting.
- Proficiency in the development of test plans, procedures, and techniques.
- A thorough knowledge of diagnostics techniques specifically relevant to the hardware and software subsystems furnished to this project.
- At least a working knowledge of each of the following: computer operating system principles, LAN/WAN network elements, wire-line and wireless communications equipment, CCTV camera subsystems, Fiber Optic communication equipment,

Transmission Control Protocol/Internet Protocol (TCP/IP) communication protocols and data communications equipment.

The obligations of the System Integrator firm are described in Section 19.4 (*System Integrator*).

1.6.4.9 ITS Systems Engineer

The ITS systems engineer shall have a minimum of 5 years of experience in ITS systems engineering, ITS design, and ITS integration. The obligations of the system integrator firm are described in Section 19.4 (*System Integrator*).

1.6.4.10 Traffic Control Supervisor

The minimum qualifications of Design-Builder's Traffic Control Supervisor shall include certification as a Work Zone Safety Supervisor by the American Traffic Safety Services Association (ATSSA) and 5 years of experience in work zone traffic control on freeway/highway projects similar in size, scale, and complexities to the Project.

1.6.4.11 Water Pollution Control Supervisor

The Water Pollution Control Supervisor(s) shall be Certified Professionals in Erosion and Sediment Control. The obligations of Water Pollution Control Supervisor are described in Section 8.4.2.1 *(Erosion Control Plans)*.

1.6.4.12 Project Controls Manager

Design-Builder's project controls manager shall have a minimum of 5 years of demonstrated expertise in project and document controls for previous contracts similar in magnitude and complexity to the Project.

1.6.4.13 Lead Scheduler

Design-Builder's lead scheduler shall have a minimum of 5 years of demonstrated expertise in urban freeway construction schedule preparation and implementation similar in magnitude and complexity to the Project.

1.6.4.14 Crosshole Sonic Logging Test Provider

Design-Builder's appointed Crosshole Sonic Logging (CSL) test provider must have a minimum of 3 years of experience on a minimum of five projects, directly collecting, analyzing, interpreting and reporting CSL using ASTM D6760. Each project must include at least one drilled shaft tested greater than 5 feet in diameter with a length of 50 feet or more.

1.6.4.15 Crosshole Sonic Logging Test Lead Engineer

Design-Builder's appointed CSL test lead engineer that will be designated to the Project must be a Registered Professional Engineer, and must demonstrate 3 years of experience in responsible charge of collecting, analyzing, interpreting, and reporting CSL test data.

1.6.5 Coordination of Work

Design-Builder shall coordinate Work with all development planning, design, and construction efforts for adjacent properties, and work with and monitor such adjacent work, whether performed

by the Department or another Governmental Entity, community groups, landowners, Utility Owners, Utility Owner's consultants and contractors, resource agencies, environmental groups, or any other Person. Design-Builder must be aware of the impact all such work may have on the Project, and account for all such impacts in the Design Documents and Construction Documents. Design-Builder is responsible for reviewing plans for adjacent work and providing the Department with written comments on adjacent work that may result in potential impacts on the Project. Design-Builder shall compile Design-Builder and Department review comments on the adjacent work, and transmit the compiled comments to the entity that supplied the adjacent work plans. Design-Builder must immediately notify the Department upon Design-Builder's receipt of any report or plan associated with adjacent work. The Department will establish required review periods for each specific report, map, or plan on a case-by-case basis after discussing acceptable review periods with Design-Builder.

Design-Builder shall identify and examine features of any adjacent work outside the Planned ROW Limits, and demonstrate full compatibility in horizontal and vertical alignment and other pertinent technical data between Design-Builder's Work and adjacent work. The Design Documents must resolve any inconsistencies or design conflicts between adjacent work and the Project in a manner mutually acceptable to the Department and Design-Builder.

1.6.5.1 Department Provided Approvals

Except as otherwise provided in the Contract Documents, Design-Builder is responsible for following the obligations defined in the approvals listed in Appendix 2 of the Contract. Such approvals may require reevaluation, amendment, or supplementation as the Work progresses, or to accommodate actions not identified in the approvals in Appendix 2 of the Contract or covered specifically by existing resource agency coordination. Changes to the Project or incorporation of Additional Properties into the Project may require New Approvals. Design-Builder's obligations regarding New Approvals are set forth in the Contract.

1.6.5.2 Invoice Submittal Materials

Design-Builder shall submit a Progress Report with Design-Builder's monthly draft invoice for review and approval by the Department as set forth in Section 12.2 of the Contract. The Progress Report must include the following information:

a. The Progress Report defined in Section 1.6.1.1.4 (*Progress Report*).
b. Major milestone/upcoming Work summary sheet.
c. Identification of critical items that need resolution.
d. Log indicating status of all outstanding request for clarification notices.
e. Identification and inclusion of an aging report reflecting the status of pending issues and RFIs.
f. Correspondence log and correspondence aging report.
g. Statement of materials and labor used.
h. List of Subcontracts and their values.
i. Summary of Design-Builder billing to date.

j. Quality Management System (QMS) report, including Design Quality Management and Construction Quality Management; see Section 2.2.3.5 (*Quality Management System Reports*).

k. Quality certifications shall be submitted including a certificate signed by the DQM and the Construction Quality Manager (CQM) certifying the following for the previous month:

   i. That all Work, including that of the Designer and any Subcontractors, has been checked and/or inspected by Design-Builder's QC staff and that all Work, except as specifically noted in the certification, conforms to the requirements of the Contract Documents.

   ii. That the Quality Plan and all measures and procedures provided therein are functioning properly and are being followed, except as specifically noted in the certification.

l. A safety report, using Form SAF (see Attachment 01-2).

m. A summary of the monthly activities related to Hazardous Materials. If there is no activity, the report shall so indicate.

n. Updates to the Submittals list. The updated Submittals list shall show the record of Submittals made to date and shall show the Submittals due over the next 3-month period.

o. Media Summary (including print, television, web-based, and social media).

1.6.5.3 Project Communication

Design-Builder shall arrange and conduct the mandatory Project meetings with the Department, and other parties as determined by the Department. This activity will include, but is not limited to, the following:

a. Design-Builder shall hold Project meetings weekly with the Department staff.

b. Design-Builder shall hold management meetings monthly; attendees are to include the Design-Builders principal members as determined by the Department.

c. Design-Builder shall hold public involvement coordination meetings a minimum of once a month.

d. Design-Builder shall hold Maintenance of Traffic (MOT) coordination meetings a minimum of every two weeks upon the commencement of Construction Work.

Design-Builder shall attend all meetings as required by the Contract Documents or as otherwise requested by the Department. The Department will prepare and distribute objective draft meeting minutes. Design-Builder shall review the meeting minutes and provide comments to the Department within 7 days after receipt. The Department will distribute the final Department-approved meeting minutes to the attending parties.

Design-Builder shall produce minutes of meetings with Utility Owners and/or the Department, and distribute copies of the minutes to the Utility Owner and Department no later than 3 days after each meeting. Provide copies of all correspondence between Design-Builder and any Utility Owner no later than 3 days after receiving or sending it.

Design-Builder is not required to provide minutes of its internal meetings relating to the Project (i.e., meetings in which the sole participants are Design-Builder, other Design-Build-Related Entities, and/or their respective Subcontractors and consultants).

1.6.5.3.1 Progress Meetings

Design-Builder shall participate in monthly Progress Meetings as part of the draft invoice process as described Section 12.2 of the Contract or meetings held at the request of the Department to review and discuss the status of the Project. The monthly Progress Meeting will include discussion of, at least, the following items:

a. Progress Report submitted as part of the monthly draft invoice.
b. Major milestones and upcoming Work.
c. Potential, identified, and executed Change Orders and current status.
d. Pending or resolved Claims.
e. Differences in the month's Project Status Schedule from the Project Schedule and the previous month's Project Status Schedule.
f. Critical items that need resolution.
g. Major outstanding requests for clarification, comment resolution, and RFIs.
h. Results of the QMS.
i. Safety.

The causes, responsible Party(ies), impacts, and potential solutions to all issues identified will be addressed in the meeting with the intent of finding the most effective solutions to problems. Design-Builder's attendees shall include Key Personnel. Design-Builders Lead Personnel and other personnel shall attend and participate as necessary or as requested by the Department. Design-Builder shall make and record an action item list that specifies who is responsible for resolving existing or pending issues and the date by which the issue must be resolved to avoid Project delays.

1.6.5.4 Closeout Reports

Design-Builder shall submit a Closeout Report to the Department for review and comment every 6 months, beginning 6 months after NTP1 and continuing at 6-month intervals thru Final Acceptance. Design-Builder shall submit the Closeout Report on or before the close of business 7 days following each 6-month time period. An electronic copy and printed copy of the entire Closeout Report shall be submitted to the Department.

Each Closeout Report shall include the following items:

1. Contract compliance activities:
    a. Summarize trainee hours indicating progress versus commitments specified in Design-Builder's Workforce Diversity Plan, including a summary of hours for women and other minority workers.
    b. Report on compliance with Title VI of the Civil Rights Act of 1964 in accordance with Section 12.7 of the Contract.
    c. Report on prevailing wage compliance per the requirements of Section 7.5 of the Contract.
    d. Summarize DBE participation and good faith efforts in accordance with Section 7.1.2 of the Contract.

2. Contract administration activities:
   a. List any new Subcontractors entered into during the reporting period and clearly identify DBE Subcontractors and Suppliers.
3. Materials and testing activities:
   a. Report on compliance with Buy America requirements as specified in Appendix 13 of the Contract.
   b. List materials certifications submitted during the reporting period.
   c. List materials testing reports completed during the reporting period.
   d. Provide an updated materials acceptance summary sheet.
4. Preparation of Record Drawings
   a. Report on status of Record Drawings for Work completed during the reporting period.

Within 15 days following the submittal of each Closeout Report, Design-Builder shall schedule and attend a meeting with the Department to review the report. The purpose of these meetings is to ensure Design-Builder record keeping processes and procedures are adequate to facilitate closeout at the completion of the Project. Design-Builder shall adjust its closeout record keeping and reporting processes and procedures as necessary based on feedback Design-Builder receives from the Department.

Prior to Substantial Completion, Design-Builder shall confirm final closeout documentation required by the Department and assemble and submit a final Closeout Report containing the complete documentation package to the Department for approval. The final Closeout Report shall include a Governmental Accounting Standards Board (GASB) report identifying work breakout percentages between capacity, maintenance, and other. Final Acceptance shall not occur prior to the Department approving the final Closeout Report in accordance with Section 20.3.2 (c) of the Contract.

1.6.6 Project Office

Design-Builder shall establish a Project Office within 90 days after NTP1; the Project Office shall be located within 5 miles of any point within the Site. The purpose of the Project Office is to consolidate and collocate Design-Builder's key management, design, construction, quality, and compliance functions and the Department's management, oversight, and compliance staff in order to facilitate the teamwork, communications, and interaction called for by the Contract Documents and necessary to ensure a successful Project. The Project Office shall remain open and fully functional as specified herein until 90 days after Substantial Completion.

It is important that the space in the Project Office occupied by the Department be integral with that of Design-Builder to facilitate teamwork and continuous interaction; however, the Department space shall be sufficiently separated within the overall Project Office space to allow internal Department functions and interaction to take place apart from Design-Builder's operations.

Design-Builder shall provide field office facilities located within 1 mile of the Site no later than 15 days before NTP2. The purpose of the field office facilities is to consolidate and collocate the Department's construction oversight staff with Design-Builder's construction staff.

1.6.6.1 Interim Project Office

Until the permanent Project Office is established, Design-Builder shall establish an interim Project Office within 30 days after NTP1 to facilitate early communications and interaction between the staffs of Design-Builder and the Department. The interim Project Office is not required to be proximate to the Site. The amount of office space in the interim Project Office, including the accommodation of the Department staff, will be as mutually agreed to by Design-Builder and the Department during the initial office coordination described in Section 1.6.6.2 (*Office and Field Office Coordination Meeting)*.

1.6.6.2 Office and Field Office Coordination Meeting

Within 2 weeks after issuance of NTP1, Design-Builder shall schedule a meeting with the Department to coordinate plans for both the interim and permanent Project Offices and the construction field office(s), including the integration, accommodation, and incorporation of the Department's requirements.

1.6.6.3 Design-Builder Personnel and Functions to be Located at the Project Office

The principal location of Design-Builder's personnel listed below, together with support staff relative to their functions, shall be in the Project Office.

The following Design-Builder personnel shall be assigned to the Project Office:

- Project Manager
- Deputy Project Manager(s)
- Lead Engineer
- Construction Manager
- Quality Manager
- Environmental Compliance Manager (ECM)
- Safety Manager
- Traffic Control Engineer

The following Design-Builder personnel shall be assigned primarily to the Project Office, acknowledging that some time will be spent in the field or design offices during the performance of their responsibilities:

- DQM
- Responsible Engineer(s)
- CQM
- Public Information Coordinator
- Water Pollution Control Supervisor
- Project Controls Manager
- Lead Scheduler

Although considered beneficial by the Department, it is left to the discretion of Design-Builder as to whether design activities of the Project are located at the Project Office. If all or a portion of the design is not accomplished at the Project Office, it is expected that the key design leads listed below shall be full-time and spend a minimum of four (4) Business Days per week in the Project Office:

- Structures Lead Design Engineer
- Structures Construction Manager
- Landscape Architect
- L&A Construction Manager(s)

All Design Reviews called for by the Contract Documents and all coordination and other activities requiring the Department's consultation shall be held in the Project Office.

1.6.6.4 Office Facility

Design-Builder shall provide and pay for all office and other building space, facilities, and equipment necessary to design and construct the Project and meet the requirements of the Contract Documents and of this Section 1. In making arrangements for its staff and for accommodating the Department staff, Design-Builder shall provide for:

1. Locating Design-Builder's Project management staff and the Department's staff in the same building.
2. Locating Design-Builder's design staff in the same location.
3. Locating the Department's staff in the same building as Design-Builder's design staff.
4. Locating Design-Builder's construction staff and the Department's staff in the same building.
5. If the offices are adjoining, provide a locking door between the Department's offices and Design-Builder's staff.

1.6.6.4.1 Joint Inventory and Inspection of Facilities

Before accepting or using any facility or item provided by Design-Builder, the Department, in conjunction with Design-Builder, will conduct a condition survey and inventory of all such items, and the Department and Design-Builder will note the condition of each item. The Department and Design-Builder will provide written receipts for all facilities and items found to meet Contract Document requirements. The written receipt will note the condition of all items. The Department will not be obliged to accept any facility or item that the Department reasonably considers does not meet the requirements of the Contract Documents.

1.6.6.5 Design-Builder-provided Items and Services

1.6.6.5.1 Facilities and Space Requirements

For office space, including any office trailers, Design-Builder shall be responsible for providing all Utilities connections and supply, including domestic water (hot and cold potable water), electricity, telephone, high-speed Internet access, and gas (natural gas or liquefied petroleum gas [LPG]), and sewage, and for paying all costs, including monthly costs except as noted elsewhere, for providing and supplying such Utilities until at least 90 days after Substantial Completion or after facilities are no longer needed by the Department, whichever is earlier.

1.6.6.5.2 General Office Requirements for Facilities Provided by Design-Builder

For office trailers or spaces provided by Design-Builder, Design-Builder shall provide offices in good and serviceable condition, at least of the same quality as the facilities that Design-Builder

provides its counterpart Project management, design, and field staff, respectively, and available for occupancy as specified. Design-Builder shall submit the proposed Project Office space, floor plan, and location for prior approval by the Department.

Design-Builder shall secure sites, and install, set up, and maintain the facilities as part of the Work. Design-Builder shall obtain and pay for all permits from the City of Las Vegas, Clark County, the State of Nevada, or other Governmental Entities, as applicable, for the placement of the modular building/office building and installation of necessary utilities. The building must meet or exceed U.S. General Service Administration (GSA) guidelines and specifications. The building must meet or exceed all local building codes.

If mobile offices are provided, Design-Builder shall install a 6-foot chain link fence to secure the area around mobile offices and parking. Design-Builder shall provide a 12-foot locking swing gate.

Design-Builder shall provide a keyed entry to the Project Office with 40 key sets and double cylinder deadbolt locks and shall make these keys available to the Department personnel. Keys shall be provided for office doors, one for a storage room, one for the Survey Room (locking), one for a conference room, two for bathrooms, and two for network/server room. The storage room door must include a deadbolt lock and keys. Locking doors will be provided to all offices, with two keys provided for each door. Bathroom doors must lock from the inside.

The network/server room requires a separate, dedicated lockable room, covering at least 100 square feet (ft^2) for networking, server, and telco termination equipment. Design-Builder shall include one 25-pair service extension from telco demark to network/server /room and a ¾-inch plywood backboard to support the telco termination point. The room requires heating, ventilation, and air conditioning (HVAC), an uninterruptible power source (UPS), and separate, dedicated air conditioning service with dedicated circuit breakers. Design-Builder shall provide a minimum 8-gauge ground lead with dedicated ground for network equipment as defined by American National Standards Institute (ANSI)/National Fire Protection Association (NFPA) 70. Design-Builder shall install one Electronic Industries Alliance (EIA)/Telecommunications Industry Association (TIA) 19-inch by 7-foot equipment rack, with a 3-foot minimum clearance in front, behind, and on one side of the rack. Design-Builder shall install a minimum of one dedicated phone extension in each room. Floor layout requires Department Information Technology (IT) pre-approval for all monument or rack locations. All patch cabling (Category [CAT] 6 minimum) requires the use of differentiated (color) patch cabling to clearly identify Department network wiring versus Design-Builder network. (The Department's preferred color is blue patch cables). The network/server room is to be equipped with active fire detection with automatic monitoring and reporting capability to a local fire monitoring agency or company.

All interior spaces shall have overhead lighting meeting Occupational Safety and Health Administration (OSHA) and code requirements for office space. Design-Builder shall install a minimum of eighty 4-foot, double 40-watt tube fluorescent light fixtures over desks and conference table areas and 80 duplex outlets. Design-Builder shall install a minimum of three electrical outlets in each office, four in the conference room, six in the common area, and four in the reception area. One duplex outlet shall be located in the storage/IT room. Circuit breaker box shall be located in a safe accessible location. Design-Builder shall provide one exterior light at each outside door and overhead lighting in the parking area. Each office space shall be wired EIA/TIA 568B-compliant. Each office shall be fitted with four RJ-45 jacks, (white, gray, blue, and orange in four-way gang-plate, certified to CAT6 standard and labeled to identify as Department MDF points. Cabling runs in ceiling (if fitted) shall be supported by J-hooks or bridle rings with a minimum of 3-foot service loops.

Design-Builder shall provide restrooms at the Project Office and field office until at least 90 days after Substantial Completion or after facilities are no longer needed by the Department, whichever is earlier, unless otherwise agreed by the Department in writing.

If office spaces or appurtenant facilities are destroyed or damaged during the Work, except by fault of the Department or its personnel, Design-Builder shall, at its expense, repair or replace those items that Design-Builder provided, to their original condition within 10 days.

For the facilities it provides, Design-Builder shall:

1. Provide janitorial services three times per week on alternating days, to the satisfaction of the Department. Janitorial services shall include, but are not limited to, dusting, vacuuming all carpets, mopping all hard floors, window cleaning, garbage disposal, bathroom cleaning and disinfecting, and carpet shampooing every 6 months. The cleaning services shall be provided by a professional and reliable firm as approved and retained by Design-Builder for this specific purpose. The cleaning service shall be licensed and bonded. All equipment and cleaning supplies shall be provided by the cleaning company and/or Design-Builder and shall also include toilet paper, paper towels, sanitary toilet seat covers, disinfectant, trash bags, hand soap, and air sanitizer.

2. Install wall-to-wall low-pile carpet flooring. The break room, bathrooms, network/server room, and entry ways shall have tiled flooring.

3. Be responsible for maintenance of the exterior area of office spaces, including access to parking areas and snow and ice removal.

4. Provide and maintain all Department offices that it provides for at least 90 days after Substantial Completion or until facilities are no longer needed, whichever is earlier, unless otherwise agreed by the Department in writing.

5. Be responsible for disposal or removal of all Design-Builder-provided facilities and any site restoration work required.

6. Provide fire suppression devices (extinguishers) as required by local codes.

7. Provide HVAC systems capable of maintaining temperature between 70 and 75 degrees Fahrenheit (°F) in all spaces throughout the year. Provide monthly service to replace air filters in the air conditioning system to be paid for by Design-Builder.

8. Equip the Project Office with a minimum of 20 telephones, with one located in each office, one in the conference room, three in the reception area, and three in the common area. Provide IP Avaya telephones and system with paging capability. Provide 20 separate private individual voice mail boxes. Provide 5 of the 20 telephone lines with rollover capability and an additional telephone line for the facsimile machine. Each of the telephones provided for the office space shall be fully capable of utilizing all available lines. Include long distance service on all lines. Phone system outages lasting longer than 4 hours require immediate response by Design-Builder or its service provider to restore service.

9. Install, provide, and maintain business-class broadband Internet access with static IP and minimum 60-megabits per second (Mbps) downstream, and 5-Mbps upstream. Terminate broadband Internet connections in network/server room. Provide virtual private network

(VPN) termination device to the Department IT specifications. The VPN termination device shall become the property of the Department at Final Acceptance.

10. The men's bathroom must be provided with a urinal, water closet, and a single tub sink. The women's bathroom shall be provided with a self-contained disposal unit, water closet, and single tub sink. Sink and toilet shall be hooked up to water and sewer system. A 20-gallon water heater shall be provided, and water pipes shall be located so that they are unexposed and protected from damage and freezing temperatures.

11. Provide a large dumpster-type trash receptacle, with weekly disposal service.

Design-Builder shall provide a well-graded and lighted site for the office with an access road and parking area. The parking area shall be reasonably level. The parking area, including visitor parking, shall have an all-weather surface.

All rooms shall have exterior windows, excluding the common area, storage room, break room, and restrooms. Design-Builder shall install a minimum of 20 windows with provisions for cross ventilation and locks. Design-Builder shall install steel mesh screens and mini blinds. Windows shall be a minimum of 16 ft^2.

The offices shall be equipped with either a 24-hour security service or silent watchmen-type security system paid for by Design-Builder. The Department will set the alarm code. Design-Builder shall install sufficient exterior security lighting that is automatically activated at low light levels to maintain 2 foot-candles of lighting in the office site area, including the parking area.

Design-Builder shall provide the field office facilities for the Department construction field staff at least 45 days before starting Construction Work to be observed by the staff to occupy these facilities.

Design-Builder shall maintain the Project Office space and furnishings in the condition originally accepted. Design-Builder shall maintain all furnished equipment in good working condition and shall replace or repair any nonfunctional equipment, including light bulbs and fluorescent tubes, within 5 Business Days. Design-Builder shall provide insurance against theft or damage for all inventory stored in the field facilities ($50,000 minimum).

Design-Builder shall replace any equipment damaged or stolen within five (5) Business Days. Failure to maintain the Project Office space and furnishings may result in the partial payments being withheld until the condition(s) are corrected.

1.6.6.5.3 Department's Project Office Requirements

Design-Builder shall provide Project Office facilities for the Department's management and design oversight staff collocated with Design-Builder's staff as specified in this Section. No later than 90 days after NTP1, Design-Builder shall provide the separate spaces, furnishings, and equipment to the Project Office for the Department as indicated below.

Although design and construction activities will proceed simultaneously, it is recognized that some economies may be achieved during some periods when both design and construction activities are not at peak levels; therefore, the details specified in the tables in this Section 1.6.6.5.3 and the following section represent a maximum peak-period requirement, and at times a smaller facility than the sum of these requirements may suffice.

Item	No. Required	Requirement
Department offices	5	150 ft² each, enclosed with lockable door
Department offices	10	100 ft² each
Conference room	1	Sized to accommodate a minimum of 20 Department staff and associated equipment and shall have functioning videoconferencing capabilities.
Storage/filing space	1	100 ft², enclosed, with lockable door
Network/server room	1	100 ft², enclosed, with lockable door
Restrooms	1 each	Men's and Women's (Designated for Department use only)
Paved parking		25 spaces during working hours 10 fenced parking spaces during nonworking hours
Break room	1	150 ft², 8 feet of counter space with sink that has cold and hot running water

Furnishings and Equipment	
Description	**Quantity**
6-foot by 3-foot L-shaped five-drawer desks with locks	18
Executive high back chairs with swivel / tilt	18
Mid-back conference table chairs with swivel / tilt	10
16-foot by 5-foot conference table	1
Large drafting/layout table	1
36-incyh by 48-inch dry-erase boards for the offices	18
48-inch by 72-inch dry-erase board for the conference room	1
Steel storage cabinets, five shelves, locking	1
Legal-size vertical four-drawer locking file cabinets	4
Refrigerator/freezer (20 cubic feet capacity)	1
Drinking water	yes
HP color printer MFP-M8802	1
Five-shelf bookcases	5
Tablets – Apple iPad Air, minimum 64-GB, Wi-Fi and Cellular connectivity (including connection and monthly access fees)	5
Project Office desktop computer systems – Dell Optiplex 9020 minitower	5
Project Office laptop computer systems – Dell Lat E6540	5

Furnishings and Equipment	
Description	**Quantity**
22-inch-wide screen digital flat panel monitor – Dell P2214H	8
USB enhanced multimedia keyboard – Dell KB522 Business Multi Media	8
USB two-button scroll mouse – Dell KB522 Business Multi Media	8
CISCO Video Conference Codec SX20	1
Juniper SSG 5 Firewall	1
Avaya ERS 4850 GTS PWR & ETHERN SWITCH	1
55-inch-wide screen flat panel high-definition television	2

Notes:
If sharing of network devices such as printers, copiers, scanners, and fax is envisioned or planned, Design-Builder will work with Department IT networking to design and provide a shared, firewalled DMZ to add another layer of security to the local area network, where these items will be connected. Access to the DMZ will be restricted to only that traffic necessary for Design-Builder's operation. No traffic between or interconnection between the Department and Design-Builder's network will be permitted without approval by the Department IT Office.

1.6.6.5.4 Department's Field Office Requirements

Design-Builder shall provide field office facilities for the Department's construction oversight staff collocated with Design-Builder's staff as specified in this Section. No later than 15 days before NTP2, Design-Builder shall provide the separate spaces, furnishings, and equipment for the Department as indicated below:

Item	No. Required	Requirement
Department office	5	150 ft² each, enclosed with lockable door
Department offices	10	100 ft² each
Conference Room	1	Sized to accommodate a minimum of 15 Department Staff and associated equipment and shall have functioning videoconferencing capabilities
Storage/filing space	1	100 ft², enclosed, with lockable door
Survey office	1	200 ft²
Restrooms	1 each	Men's and Women's (Designated for Department use only)
Paved parking		25 spaces during working hours 10 fenced parking spaces during non-working hours
Break room	1	150 ft², 8 feet of counter space with sink that has cold and hot running water

Furnishings and Equipment	
Description	**Quantity**
6-foot by 3-foot L-shaped five-drawer desks with locks	12
Executive high back chairs with swivel / tilt	5
Mid-back conference table chairs with swivel / tilt	20
12-foot by 4-foot conference table	1
5-foot precision drafting tables	4
Ergonomics drafting chairs with multi-task control and arm rest	4
Stacking guest chairs with arms	10
36-inch by 48-inch dry-erase boards for the offices	15
48-inch by 72-inch dry-erase board for the conference room	1
Steel storage cabinets, five shelves, locking	2
Legal-size vertical four-drawer locking file cabinets	10
Refrigerator/freezer (20 cubic feet capacity)	1
HP color MFP-M8802	1
Five-shelf book cases	5
Literature organizer 58 ¼ inches high by 30 inches wide by 14inches deep (60 adjustable shelves)	1
Literature organizer (24 compartments)	1
Tablets – Apple iPad Air, minimum 64GB, Wi-Fi and Cellular connectivity (including connection and monthly access fees)	15
Field office desktop computer systems– Dell Optiplex 9020 minitower	5
Field office laptop computer systems – Dell Lat E6540	5
22-inch-wide screen digital flat panel monitor- – Dell P2214H	8
USB enhanced multimedia keyboard – Dell KB522 Business Multi Media	8
USB two-button scroll mouse– Dell KB522 Business Multi Media	8
CISCO Video Conference Codec SX20	1
Juniper SSG 5 Firewall	1
Avaya ERS 4850 GTS PWR & ETHERN SWITCH	1
55-inch-wide screen flat panel high-definition television	1
Bloodborne pathogen kit	2
Broom and dust pan	2
Carbon monoxide detector	2

Furnishings and Equipment	
Description	**Quantity**
Cleaning supplies	yes
Drinking water	yes
Fire extinguishers	4
First-aid kit	3
Microwave oven	2
Paper shredder	2
Pencil sharpener	3
Shelving (1-foot)	100
Six-hook coat rack	2
Smoke detector	6
Telephone lines	16
Telephones	16
Voice mail	16
Wastepaper baskets	20

Design-Builder shall provide the number of printer/copy machines listed above, which shall reside on the shared network. Design-Builder shall install and maintain the copy machines in the Project Office. Should the copy machines require repair and be out of service for more than 5 Business Days, Design-Builder shall supply an equivalent replacement within 2 Business Days.

Design-Builder shall provide one color scanner from a reputable manufacturer such as Canon, Bell & Howell, Panasonic, or approved equal, with the following minimum capabilities: 11 inches by 17 inches scanning, black and white and color scanning, automatic document feeder capability of 200 sheets, black and white scanning speed of 75 pages per minute, color scanning of 40 pages per minute, and duplexing. Design-Builder shall provide supplies, toner, parts, service, and repairs for the color scanner as needed.

The Project Office will be vacated and all furnishings and equipment will be returned to Design-Builder 90 days after all punch list and all deficient items of work are addressed. The Department reserves the first right of refusal for continuation of the office space monthly lease, if available.

All multifunction devices as described above (copiers, fax machines, all-in-one), will comply with the Department's multifunction device security standards.

1.6.6.5.5 Computer Hardware and Software

Design-Builder shall provide computer hardware and software for the Department's use in each of the offices and shall provide a file server, accessible to the Department staff, for common deposit and retrieval of letters from the Department, Design-Builder, drawings, submittals, and

other Project information needed by the Department. Design-Builder shall make necessary arrangements for allowing access to the server either through “hardwiring” or remote access. Design-Builder shall also make arrangements for the Department’s computers to be linked directly to the Department’s network by coordinating with Department IT regarding network connectivity. All computer equipment provided for Department staff will meet Department computer hardware, software, and security requirements as defined by Department IT.

The Department’s current minimum standards for computer hardware and software are:

1. Equivalent in hardware to the Department’s other administrative computers used on the Project
2. Microsoft Windows 7 Operating System
3. Microsoft Office, version 2013, at a minimum
4. Access to printers via a network
5. Internet access
6. Onsite setup services
7. 3-year hardware technical services, including hard drive support
8. Adobe Acrobat 11.0 Professional

1.6.6.5.6 Backup of Electronic Files and Protection of Hardcopy Files

Design-Builder shall provide for daily, weekly, and monthly backup of its electronic files, including offsite storage of said files in a secure, fireproof location. Design-Builder shall provide to the Department written verification that the backup media and methodology are capable of restoring Design-Builder’s electronic files to the original state. Design-Builder shall also be responsible for protecting its Project-critical hardcopy files in secure, fireproof storage and/or filing cabinets.

The Department will provide backup for the Department’s electronic files that reside on its network.

1.6.6.5.7 Site Identification Signing

Design-Builder shall provide a minimum of one identification sign at all Project Offices and all sites of Work, unless required otherwise in the Contract Documents. The signs shall be provided in visible locations, directly adjacent to office or Work site main entrances.

1.6.6.6 Common Space and Equipment

Design-Builder shall provide the following shared common space and equipment, adequate and appropriate for the efficient operations of the entire Project Office, for use by both Design-Builder and the Department personnel:

1. Varied-size conference room(s) space to hold all reviews and meetings, with table and seating to accommodate a minimum of eight individuals
2. Kitchen facility

3. Reception area

4. Men's and women's bathrooms

5. Printers, copiers, facsimile machines, plotters, etc., and associated paper supplies (Design-Builder may elect to locate some of this equipment in the Department's allocated spaces).

1.7 Responsibility for Utility Service Costs

Commencing upon the effective date of NTP1 and continuing through Final Acceptance, Design-Builder shall be responsible for all costs of Utility services, including costs for power, communications, and water service associated with Design-Builder's operations such as maintenance facilities, office facilities, or other similar facilities under Design-Builder's control necessary for the Work.

Design-Builder shall be responsible for all costs of Utility service associated with the L&A Work, including costs for power, and water service through the 2-year Plant Establishment Period after Final Acceptance in accordance with Section 5 (*Landscape and Aesthetics*).

2 QUALITY MANAGEMENT SYSTEM

2.1 General Requirements

Design-Builder shall facilitate a Quality Management System (QMS), ensuring high-quality Work, prolonging the useful life of the Project infrastructure, and minimizing risks to the Department, the public, and stakeholders. Design-Builder shall submit to the Department an International Organization for Standardization (ISO) 9001:2008-compliant Quality Management System (QMS) as part of the PMP.

Without limiting the requirement of the QMS to comply with the ISO 9001:2008 standard, Design-Builder's QMS shall also incorporate the requirements from the following reference documents:

- ISO 9001:2008 Quality Management Systems – Requirements
- ISO 9000:2008 Quality Management Systems – Fundamentals and Vocabulary
- ISO 19011:2002 Guidelines for Quality and/or Environmental Management Systems (EMS) Auditing

Design-Builder shall develop and implement an integrated QMS in accordance with the requirements of this Section 2 and the ISO 9001:2008 standard. In this integrated system, the Quality Manual is the top-level document, with Quality Management Plans (QMPs) at the second level, Quality System Procedures (QSPs) at the third level, work methods and Inspection and Testing Plans at the fourth level, and Books and Records related to quality management at the fifth level.

The minimum documentation requirements for the QMS are the following:

1. The Quality Manual, pursuant to Section 2.2.2 (*Quality System*).
2. QMPs, as specified in Section 2.2.2 (*Quality System*).
3. References to the Quality Manual included in each QMP, as well as the appropriate processes and procedures, detailed organization charts, unique QSPs, and detailed process flow charts documenting who performs the Work, what they do, and what evidence shall be generated that they have performed quality-related aspects of the Work correctly.
4. The Quality Audit Plan, pursuant to Section 2.2.10.1 (*Quality Audit Plan*).

Books and Records related to quality management, pursuant to Section 2.2.3 (*Document and Data Control*). The QMS shall, at a minimum, include the Submittals described in this section and shall comply with the following:

- The requirements and principles of the ISO 9001:2008 standard and any other applicable standards specified in this Section 2
- Good Industry Practice
- All other requirements set out in the Contract Documents

The approval of Design-Builder's Quality Manager, as evidenced by his/her signature, is required on the cover sheet of all QMS documentation as listed in Table 2-1 before their issuance.

Design-Builder is responsible for all QA and QC activities that are required to manage its own processes. Design-Builder shall ensure that all aspects of the Work are covered by the QMS and in compliance with the provisions written in this section. The QMS shall be implemented at all levels of Design-Builder's organization, including, but not limited to, consultants, Subcontractors, and Suppliers. Design-Builder shall not be relieved of any of its responsibilities or obligations set out in this section by the assignment of such responsibilities or obligations to others. Design-Builder shall prepare and submit separate QMPs for the Design Work and Construction Work. Design-Builder's QMPs shall address activities of any Subcontractors, and each of Design-Builder's Subcontractors shall be subject to the requirements of the Quality Manual, including the applicable QMP.

Design-Builder's QMS shall establish Design-Builder's quality management team. The QMS shall address all Work by Design-Builder, including all QC and QA required for the Work. Design-Builder's QA organization shall report directly to Design-Builder's Quality Manager, and the QC organization shall report to Design-Builder's Project Manager.

Design-Builder shall implement a program and shall have mechanisms in place, such as management reviews and quality audit programs, to allow all identified opportunities for improvement of the QMS to be recorded, tracked, implemented, or closed out.

Design-Builder shall ensure that all of its team members, Subcontractors, and Suppliers are aware of the importance of continuous improvement and are actively engaged in the implementation of the QMS with regard to the Work.

2.1.1 Quality Management System Submittal

Design-Builder shall submit a comprehensive QMS as part of the PMP. The scope, content, and structure required for Design-Builder's QMS documentation are found in Attachments 02-1 through 02-5. All documents shall be similar in style and layout (including organizational charts and process flowcharts) and shall be consistent with regard to content. Design-Builder shall be solely responsible for the quality of the Work.

2.1.2 Quality Management System Reviews and Updates

Design-Builder's executive management shall review the QMS at defined intervals (at a minimum quarterly) in a manner sufficient to ensure its continuing suitability and effectiveness in satisfying the requirements of the ISO 9001:2008 standard and Design-Builder's stated quality policy and objectives. Records of such reviews shall be maintained, and minutes shall be taken of the review meetings. Both shall be maintained as Books and Records, and copies of minutes shall be provided to the Department in accordance with the Contract Documents.

As the Work progresses, Design-Builder shall update its QMS as required to ensure the QMS is in full compliance at all times with the ISO 9001:2008 standard and the requirements of the Contract. Design-Builder and, as applicable, the Department, may identify the need for revisions to the QMS. Design-Builder shall submit any revisions or updates to the QMS to the Department for approval within 30 days of the identification of the need for revision.

In addition, Design-Builder shall submit updates to its QMS in accordance with the PMP requirements of the Contract Documents, including Section 1.5 (*Project Management Plan*) of these Technical Provisions and Section 2.1.1 of the Contract. Design-Builder shall submit to the Department a conformed copy of the updated QMS with proposed revisions highlighted.

2.2 Quality Management System Requirements

2.2.1 Management Responsibility

2.2.1.1 Quality Policy

Design-Builder shall establish a policy and have a published statement signed by its executive management of Design-Builder's commitment to quality and the organization's quality objectives. It shall explain the commitment in terms of the services provided to the Department and the responsibilities assumed by Design-Builder to discharge its contracted responsibilities to quality in accordance with the Contract Documents, including these Technical Provisions. The statement shall be transmitted and acknowledged by all Design-Builder's and DB-Related Entities' staff and be included in the QMS.

2.2.1.2 Quality Organization

Design-Builder's quality organization will be similar to the organization as shown on Figure 2-1.

1. Responsibility and Authority:

    a. Design-Builder's executive management shall have the responsibility and authority to plan and determine the overall direction of Design-Builder and its relationship to the QMS. Design-Builder's executive management shall ensure that its quality policy is well-documented and understood by all employees using formal and informal means of indoctrination, and shall further ensure the implementation of the quality policy by everyone in the organization.

    b. The QMS shall be an integral part of the overall project management system, and as such, shall be supported throughout the organization. All personnel required for the Work, including all Design-Builder-Related Entities, shall be aware of the QMS requirements that govern their respective Work.

    c. A detailed description of the QMS organizational arrangements, including flow diagrams, shall be a component of the QMS and kept current. All key roles and personnel, lines of communication, and authority between Design-Builder and the Department and their representative(s), and with other organizations or entities involved with the Project, shall be identified.

    d. Clear descriptions of the responsibilities, authority, and relationships of personnel who manage, perform, and verify work affecting quality shall be documented, particularly for personnel who need the organizational freedom and authority to do the following:

        1) Implement appropriate measures to prevent the occurrence of any Nonconforming Work relating to the product, process, and QMS.

        2) Identify and record any problems relating to the product, process, and QMS.

3) Initiate, recommend, or provide solutions through designated channels.

4) Confirm within a defined timeline the implementation of solutions. The verification shall also investigate if the solution to the identified problem created another quality problem.

5) Control any further processing, delivery, or installation of nonconforming product until the deficiency or unsatisfactory condition has been corrected. Controls shall be established, including stopping work if necessary, once a significant quality problem is identified, until the cause of the problem can be identified and the required corrective action can be implemented.

Figure 2-1 Project Quality Organization

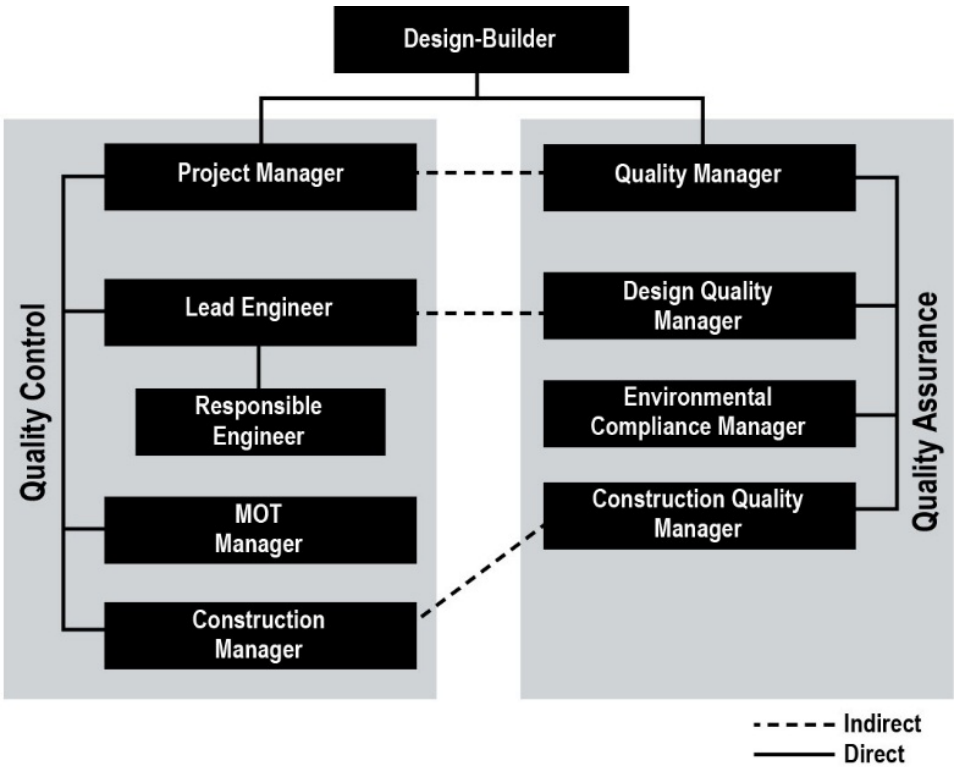

2.2.1.2.1 Quality Manager

Design-Builder shall designate a Quality Manager who shall be responsible for overseeing Design-Builder's overall quality program and the preparation, implementation, management, and update of both Design-Builder's PMP and the QMS, including all management of design and construction.

The Quality Manager is a Key Personnel and shall, irrespective of his or her other responsibilities, have defined authority for ensuring the maintenance of the QMS and reporting to the Department on the performance of the QMS. The Quality Manager shall have direct reporting obligations to Design-Builder's executive management who are above the level of the Project Manager and not directly responsible for the Work. For purposes of this Section 2, "executive management" shall

mean those persons to whom Design-Builder's Quality Manager reports and who have overall responsibility for Design-Builder's policies and performance of the Work.

Design-Builder's Quality Manager shall be present and available for consultation with the Department throughout the duration of the Project. At a minimum, Design-Builder's Quality Manager shall attend the regular progress meetings and other meetings as requested by the Department.

The Quality Manager shall be the primary point of contact for the Department for all issues related to Design-Builder's QMS, including preparation, review, implementation, and updates. The Quality Manager, regardless of other responsibilities, shall ensure the establishment and maintenance of the QMS and auditing and reporting on its status and Design-Builder's compliance with the QMS, including the requirements listed in this Section 2.Specific Responsibilities of the Quality Manager

Without limiting the generality of the foregoing, the job specification and responsibilities of the Quality Manager shall include the following:

1. Developing, implementing, and ensuring the effective operation of Design-Builder's QMS.
2. Initiating management reviews, not less frequently than indicated in Section 2.1.2, and taking other actions necessary to ensure the effective operation and continuous improvement of the QMS.
3. Preparing Quality Audit Plans and scheduling and coordinating internal quality audits and external quality audits of key processes and all components of the Work, including those of all Design-Builder-Related Entities compliant with the ISO 9001:2008 Standard and the requirements of the Work.
4. Ensuring that all quality audits required under the ISO 9001:2008 standard, the requirements of the Contract Documents, and Design-Builder's QMS are conducted, and that the findings of such audits are reported to the Department in accordance with Section 3.2 of the Contract.
5. Possessing the authority to immediately stop any Work or activity that is not being performed or carried out in accordance with the Contract Documents or the QMS applicable thereto.
6. Liaising with the Department and acting as the primary representative for Design-Builder on all matters relating to quality management.
7. Preparing and submitting QMS reports to the Department as required by the Contract Documents, including these Technical Provisions.
8. Ensuring the relevant Books and Records of quality management are retained in accordance with the QMS and the record retention requirements of the Contract.
9. Developing and implementing a program for corrective and preventive action for Nonconforming Work.
10. Carrying out any other matters which, in accordance with the Contract Documents are the responsibility of the Quality Manager.

11. Reporting on the performance of the QMS to Design-Builder's executive management for review and as a basis for improvement of the QMS.

12. Providing direct supervision of the Design Quality Manager (DQM) and Construction Quality Manager (CQM) and their staff.

Design-Builder shall identify resource requirements and provide sufficient resources, including the assignment of trained personnel, for management, performance of Work and verification activities, receiving, in-process and final inspections, and internal quality audits.

The QMS shall identify the source of staffing, including management, professional, technical, and labor, and shall deal with the integration of resources into the specific requirements of the Contract Documents.

2.2.2 Quality System

2.2.2.1 General Requirements

Design-Builder shall establish, document, and maintain a QMS as a means of ensuring that products conform to the requirements of the Contract Documents. The QMS shall include, or make reference to, the QMS procedures and outline the structure of the documentation used by Design-Builder to manage quality. The QMS shall include procedures and methods that define how Design-Builder will collaborate with the Department through Design-Builder's EDMS as described in Section 1.6.2 (*Document Management*).

The QMS shall cover all Work, including both temporary and permanent components, and without limiting the generality of this Section 2, Design-Builder will prepare and submit to the Department the Submittals listed in Table 2-1.

2.2.2.2 Compliance with Quality Management System by Subcontractors

Design-Builder is responsible for ensuring that all Subcontractors, consultants, or subconsultants engaged by Design-Builder comply with the QMS, QMPs, and QSPs that apply to the part of the Work they perform or services they provide.

2.2.2.3 Not Used

2.2.2.4 Compliance with Quality Management System (QMS)

Design-Builder shall ensure the following with regard to compliance with the QMS:

1. The design team complies with the DQMP with regard to the design activities.

2. The Design-Build Subcontractor complies with the DQMP, the CQMP, the TQMP, and the EQMP in connection with all activities under the Design-Build Contract.

3. Any Subcontractor engaged by Design-Builder complies with the pertinent QMP prepared and implemented pursuant to this Section 2 with regard to the activities covered by that entity's contract with Design-Builder.

Table 2-1 QMS Documentation

Document Name	Section Reference	Submittal
Quality Manual	Attachment 02-1	Submit as part of the PMP
Design Quality Management Plan (DQMP)	Attachment 02-2	Submit as part of the PMP
Construction Quality Management Plan (CQMP)	Attachment 02-3	Submit as part of the PMP
Traffic Quality Management Plan (TQMP)	Attachment 02-4	Submit as part of the PMP
Environmental Quality Management Plan (EQMP)	Attachment 02-5	Submit as part of the PMP
Quality Audit Plan	Section 2.2.10.1	Submit with the Quality Management System – Quality Manual, as part of the PMP
Quality Audit Plan Updates	Section 2.2.10.1	At yearly intervals following Quality Audit Plan Submittal
QMS Report	Section 2.2.3.5	Monthly in accordance with Section 1.6.5.2 (*Progress Report*)
Quality Audit Reports	Section 2.2.10.2	Submit no later than 14 days following audit completion
Corrective Action Plan	Section 2.2.10.3	Submit no later than 15 days following the closing meeting
Preventive Action Plan	Section 2.2.10.3	Submit no later than 15 days following the closing meeting
Quality System Procedures (QSPs)	Section 2.2.2.6	Submit with QMS and appropriate QMPs, as part of the PMP
Inspection and Testing Plan	Section 4.2.2	Submit with the CQMP, as part of the PMP
Books and Records	Section 2.2.3.4	Maintain updated records at all time

2.2.2.5 Quality Planning

Design-Builder shall define and document how the requirements in the Contract for quality will be met. Quality planning shall be consistent with all other requirements of Design-Builder's QMS and shall be documented in a format to suit Design-Builder's methods of operation. Design-Builder shall give consideration to the following activities, as appropriate, in meeting the specified requirements for the Project:

1. Statement of Project and quality objectives.
2. Identification of responsibilities, authorities, interfaces, and reporting relationships (both internal and external).

3. Identification of specific procedures, methods, and instructions to be used (standard and Project-specific).

4. Identification of inspections, tests, audits, and surveillances to be used.

5. Management of modifications and incorporation of modifications into documents.

6. Identification and acquisition of any controls, processes, or equipment, including inspection and test equipment, fixtures, resources, and skills, that may be needed to achieve the required Project quality.

7. Ensuring the compatibility of the design, the production process, installation, servicing, inspection and test procedures, and the applicable documentation. Design-Builder shall have significant interface obligations and shall describe in its QMS how these obligations shall be met.

8. Updating, as necessary, QA, QC, inspection, and testing techniques, including the development of new instrumentation to meet the requirements of the Contract Documents.

9. Procedures for quality verification.

10. Clarification of specifications and standards of acceptability for all features and requirements of the Work in the form of a conformed Inspection and Testing Plan, including those that contain a subjective element.

11. Identification and preparation of Books and Records related to quality management. These Books and Records comprise such documents as audit inspection reports, checklists, approved designs, specifications, plans, calculations, purchase orders, design review records, vendor evaluation reports, and cumulative progress and audit reports.

2.2.2.6 Quality System Procedures

The development and implementation of QSPs will adhere to the following:

1. Design-Builder shall prepare documented QSPs that are consistent with the requirements of this section of the Technical Provisions and Design-Builder's stated quality policy.

2. Design-Builder shall document standard work methods and those of new or complex operations in procedures and shall enforce their implementation.

3. Design-Builder shall describe to the Department the rationale for the procedures selected and, if the procedures do not address every requirement of this Section 2, explain why the standard is not applicable in a particular situation.

4. The QSPs shall adhere to the structure and principle of the ISO 9001:2008 standard, and shall at minimum address the following list of procedures:

    a. Procedure for the preparation, control, and distribution of the QMS

    b. Scope

    c. Key Personnel in Design-Builder's quality organization

    d. Organizational and technical interfaces

    e. Design input requirements

f. Design output requirements (deliverables)

g. Design reviews

h. Design-Builder and Department interactions

i. Levels of responsibility and authority

j. Procedure to control, verify, and validate the Design Work

k. Procedure for document issue, approval, and revision

l. Procedure for the identification of, and where required by the Contract Documents, the traceability of deliverable items such as Design Documents, Construction Documents, and Record Drawings

m. Procedure for the verification and control of computer programs used in the design

n. Procedures for inspecting, testing, and calibrating testing and inspection equipment

o. Procedures for handling Nonconforming Work

p. Procedures for environmental compliance

q. Procedures for corrective/preventive actions

r. Procedures for handling storing, packaging, tracking and delivering Contract Submittals

s. Training processes

t. Procedures for internal quality audits

u. Procedure for management review

5. Design-Builder shall develop and implement QSPs that are specific to the Work.

6. The performance of the quality management shall be demonstrated by internal quality audit reports, systemic trend analysis of nonconformity, records of root-cause analysis, records of corrective and preventive actions, and records of complaints.

7. Documented procedures may make reference to specifications that define how an activity is performed and the process steps to take, and work instructions shall prescribe how it the activity is to be accomplished.

2.2.3 Document and Data Control

2.2.3.1 General

Design-Builder shall establish and maintain documented procedures to control all Project documents and data that relate to the requirements of this Section 2 and Section 1.6.2 (*Document Management*), including, to the extent applicable, documents of external origin. This shall include, but is not limited to, Design Documents, Construction Documents, contracts, plans, specifications, Governmental Approvals, master drawing lists or equivalent documents, critical procedures and work instructions, quality system manuals, Project QMPs, and data (such as computer databases and computer files).

2.2.3.2 Document and Data Approval and Issuance

Design-Builder shall be responsible for ensuring that the documents and data are reviewed and approved for adequacy by authorized personnel before issuance. A master list or equivalent document control procedure identifying the current revision status of documents shall be established and will be readily available to preclude the use of invalid or obsolete documents.

Design-Builder shall be responsible for establishing, documenting, maintaining, and implementing a procedure that clearly defines the process for document review, the resolution of comments, and approval authority.

No Construction Work activities shall be performed using unreleased, unauthorized, or outdated Design Documents.

This control shall ensure that the following occurs:

1. Only the latest revisions of appropriate documents are available at all locations where operations essential to the effective functioning of the quality system are performed; and
2. Invalid or obsolete documents are promptly removed and isolated from all points of issue or use, or are otherwise ensured against unintended use.

2.2.3.3 Document and Data Changes

Design-Builder shall identify and include in the QMS the process for the initiation, review, and approval of all document changes before issuance of those changes.

Changes to documents and data shall be reviewed and approved by the same functions/organizations that performed the original review and approval, unless specifically designated otherwise in the QMS. If this is not possible, then the designated approval authority shall have adequate background and experience upon which to base the decision. The designated functions/organizations shall have access to pertinent background information upon which to base their review and approval.

Design-Builder shall submit to the Department any proposed changes or additions to or revisions of any of the QMS.

If Design-Builder does not propose any change that the Department determines to be required, then the Department may propose such change.

2.2.3.4 Quality Books and Records

Design-Builder shall establish and maintain complete and accurate Books and Records for quality management which shall provide objective evidence of conformance with all requirements of the Contract, the ISO 9001:2008 standard, and the effective operation of the QMS.

- Design-Builder shall establish and maintain documented procedures for the identification, collection, indexing, access, filing, storage, maintenance, and disposition of Books and Records
- Books and Records shall be maintained for all Work including that of Design-Builder's Subcontractors and Suppliers.

- Records shall be clearly identified, filed, and stored. Retention periods and the storage media of such records shall be established in accordance with the requirements of the Contract Documents.

- All Books and Records shall be legible and retained in such a way that they are readily retrievable in facilities that provide a suitable environment to prevent damage, deterioration, or loss. Books and Records shall be made available for inspection, duplication, audit, and evaluation by the Department in accordance with the requirements of the Contract Documents.

2.2.3.5 Quality Management System Reports

For each month of through Final Acceptance, in accordance with Section 1.5 (*Project Management Plan*) and as part of the Progress Report requirement, Design-Builder shall prepare and submit to the Department a comprehensive QMS report.

2.2.3.5.1 Specific Requirements

1. The monthly QMS report shall address all quality management activities under each of the QMPs for that month and any outstanding quality issues from prior months.

2. The monthly QMS reports shall, at a minimum, include the following information separately identified for the Quality Manual and for each QMP:

    a. A report log summarizing all Nonconformance Reports opened, closed, or still open from the previous report, in the relevant month and providing the following: date open, date closed, status (open, pending, closed), disposition (repair, rework, reject) and description of status which describes the current status of the Nonconformance Report, and if closed, when and how it was closed.

    b. Corrective action and preventive action logs providing details of the corrective actions and preventive actions performed during the month and their closeout status.

    c. A summary of all inspection and testing activities conducted during the month.

    d. Internal quality audits and external quality audits performed during the month and a 4-month look-ahead schedule for planned future quality audits.

    e. Any continual improvement initiatives taken during the month.

    f. Any other information required to be included in the monthly QMS reports pursuant to Attachments 02-1 through 02-5 or the terms of the relevant QMP.

    g. Any changes made to the QMS in compliance with the provisions of the Contract Documents.

3. Design-Builder's monthly QMS reports shall include a summary of all environmental quality management activities during each month, including:

    a. Monthly environmental reports, as required by the Contract Documents.

b. Copies of any and all Governmental Approvals, including Environmental Approvals obtained since the previous reporting period, as well as steps taken to obtain any outstanding required Environmental Approvals and the results thereof.

c. Steps taken to implement, comply with and satisfy Design-Builder's environmental obligations, including compliance with Environmental Laws and the other environmental requirements contained in the Contract Documents.

2.2.3.6 Additional Information

Notwithstanding any other provision of this Section 2, Design-Builder shall provide the Department with such information as the Department may request from time to time to demonstrate compliance with this section of the Technical Provisions.

2.2.4 Procurement and Purchasing

2.2.4.1 General

Design-Builder shall establish and maintain documented procedures to ensure that purchased services and products conform to requirements of the Contract Documents.

Design-Builder shall be responsible for establishing, documenting, and maintaining procedures for the evaluation and selection of Subcontractors and Suppliers.

2.2.4.2 Evaluation of Subcontractors and Suppliers

Design-Builder shall do the following:

1. Evaluate and select Subcontractors and Suppliers on the basis of their ability to meet requirements of the Contract Documents, including the QMS requirements.

2. Control the evaluation and selection of Subcontractors and Suppliers. Specific procedures, rather than just a statement of policy in the QMS, shall be used.

3. Describe the evaluation and selection process for Subcontractors and Suppliers of all tiers and describe the priority of quality in the evaluation and selection criteria in the QMS.

4. Define the type and extent of control exercised by Design-Builder over Subcontractors.

5. Establish and maintain quality records of acceptable Subcontractors. Records shall be maintained to document the selection, control exercised over, performance, delivery, quality, etc., of all consultants, Subcontractors, and Suppliers.

6. Comply with all requirements of the Contract Documents, including Section 7 of the Contract.

The methods Design-Builder elects to use to control the delivery of the contracted service or product may include, but are not limited to, the following:

1. Design Reviews
2. Shop inspection

3. Receiving inspection
4. Witnessed inspection hold points

Procurement and purchasing documents shall contain data clearly describing the service or product ordered, including, where applicable, the following:

1. The type, class, grade, or other precise identification.

2. The title or other positive identification, and applicable issues of specifications, plans, process requirements, inspection instructions, and other relevant technical data, including requirements for the approval or qualification of product, procedures, process equipment, and personnel.

3. The title, number, and issue of the quality system standard to be applied.

Design-Builder shall review and approve procurement/purchasing documents for the adequacy of the specified requirements before release.

The documented procedures shall identify how and by whom procurement and purchasing documents are reviewed, how comments are resolved, and who in the organization has the authorization for final approval of the document.

2.2.4.3 Verification of Purchased Service or Product

1. Design-Builder verification at Subcontractor's or Supplier’s premises shall include the following:

    a. Where Design-Builder proposes to verify a purchased product or service at the Subcontractor’s or Supplier’s premises, Design-Builder shall specify verification arrangements and the method of product release in the procurement/purchasing documents.

2. Department verification of subcontracted product or service includes the following:

    a. Where specified in the Contract Documents, Design-Builder, and the Department’s representative shall be afforded the right to verify, at the Subcontractor’s premises and Design-Builder’s premises, that a subcontracted product or service conforms to specified requirements. Such verification shall not be used by Design-Builder as evidence of effective control of quality by the Subcontractor.

2.2.5 Control of Department-Supplied Items

Design-Builder shall establish and maintain documented procedures for the control of verification, storage, and maintenance of Department-supplied items provided for incorporation into the Project or for related activities. When such items are encountered, documented procedures shall detail the receipt/approval, storage, and maintenance (preservation) of these items.

When the Department-supplied items are considered inadequate for the task required, documented procedures shall detail the process used to report such deficiencies to the Department.

2.2.6 Product Identification and Traceability

Design-Builder shall establish and maintain documented procedures for identifying the product by suitable means from receipt through all stages of production, delivery, and installation.

Design-Builder shall establish and maintain documented procedures whereby items of Work for which records are to be kept shall be identifiable.

Design-Builder shall include document title, unique number, the Department's name, Design-Builder's name, the preparer's name, and the date and revision number on all Project Submittals.

The filing and retrieval of operating manuals, certificates of compliance and, as applicable, analysis, heat numbers, inspection status, and nonconforming product shall be traceable to the items. Records shall be kept that identify the installed location of the equipment.

Design-Builder shall establish and maintain documented procedures for the unique identification and recording of individual product or batches.

2.2.7 Control of Nonconforming Work

2.2.7.1 General

Design-Builder shall establish and maintain documented procedures to ensure that product or Work that does not conform to specified requirements are prevented from use (unintended or otherwise) or installation. This control shall provide for identification, documentation, evaluation, segregation (when practical), the disposition of nonconforming product or Work, and for notification to the functions concerned.

2.2.7.2 Review and Disposition of Nonconforming Work

Design-Builder shall define the responsibility for review and authority for the disposition of a Nonconforming Work.

The Nonconforming Work reporting process, from initial creation, updates, and closeout of all Nonconformance Reports, shall follow the process outlined below. If Design-Builder or the Department discovers Nonconforming Work, it shall initiate a Nonconformance Report in accordance with the ISO 9001:2008 standard and as follows:

1. Design-Builder-initiated Nonconformance Reports — Design-Builder shall provide a Nonconformance Report identifying the Nonconforming Work to the Department within 2 Business Days of discovery of the Nonconforming Work.

2. Department-initiated Nonconformance Reports — If at any time the Department is notified or otherwise becomes aware that there is any Nonconforming Work, the Department may issue a Nonconformance Report, without prejudice to any other right or remedy available to the Department.

A Nonconformance Report initiated by either Party is issued to Design-Builder's Quality Manager, thereby activating the Nonconformance Report. The date of issue shall be recorded denoting the start of the time period for which the Nonconformance Report has an "open" status.

The Quality Manager shall, in response to the Nonconformance Report, describe a disposition of the Nonconforming Work and a corresponding corrective action. Acceptable responses are set out in Table 2-2 for various scenarios.

Table 2-2 Nonconforming Work and Corresponding Corrective Actions

Nonconforming Work Status	Disposition	Corrective Action
Physical rectification has been undertaken	Provide confirmation that the rectification work has remedied the Nonconforming Work	Describe any improvements to delivery process
Physical rectification is proposed	Provide a plan committing to scope and timing of rectification works	Describe any improvements to delivery process
No physical rectification is required (response time nonconformance)	N/A	Describe any improvement to delivery process
No rectification is proposed	Submit notice of objection to the Department	N/A

Design-Builder shall investigate and respond to all Nonconformance Reports:

1. Design-Builder may object to the issuance of any Nonconformance Report by the Department. If such objection has not been resolved by mutual agreement between the Department and Design-Builder within 5 Business Days of delivery by Design-Builder to the Department of a notice of the objection, then either Party may refer the matter to the Dispute Resolution Procedures for determination.

2. If Design-Builder fails to object to the issue by the Department of a Nonconformance Report within 5 Business Days, Design-Builder is deemed to have accepted that Nonconformance Report.

3. If there is no outstanding notice of objection, and an acceptable disposition and corrective action are documented, Design-Builder's Quality Manager records the date denoting the end of the time period for which the Nonconformance Report has an "open" status. The Quality Manager shall then change the Nonconformance Report status to "closed" and shall provide a copy of the Nonconformance Report to the Department within 2 Business Days thereafter.

2.2.7.2.1 Nonconformance Report Tracking System

Design-Builder shall implement and maintain a Nonconforming Work tracking system to monitor the status of all Nonconformance Reports initiated by the Department and Design-Builder.

The Nonconforming Work tracking system shall be fully operating prior to NTP2 with the following minimum requirements:

1. Comprise a single repository containing both Design-Builder-initiated and Department-initiated Nonconformance Reports.

2. Have the ability to attach supporting material such as photos and documents.

3. Provide live web access to the current Nonconformance Report status to both Design-Builder and the Department.

4. Produce monthly summary reports for delivery to the Department of "open" Nonconformance Reports, their status, and reasons for remaining open.

5. Address the disposition of Nonconforming Work items and the steps necessary to verify that the Nonconforming Work has been adequately addressed and that the item then can be characterized as conforming.

6. Keep and maintain records of nonconformance investigations. Also, each Nonconforming Work record shall contain all deliberations, retesting, and resolution activities, findings, and decisions.

2.2.7.2.2 Nonconforming Work Records

In addition to the maintenance of the Nonconforming Work tracking system required under this Section 2, Design-Builder shall maintain and make available to the Department upon request, records of:

1. Each instance of Nonconforming Work

2. The reference numbers of all Nonconformance Reports

3. A description of all Nonconformance Reports

4. The proposed actions by Design-Builder to rectify each Nonconforming Work

5. The date and time at which each Nonconforming Work item was identified

6. The date and time the Nonconforming Work specified in a Nonconformance Report was rectified

7. Any other documents or information pertaining to the Nonconforming Work that are required under the Contract Documents

2.2.8 Corrective and Preventive Action

2.2.8.1 General

Design-Builder shall establish and maintain documented procedures compliant to the ISO 9001:2008 standard and this Section 2 for implementing corrective and preventive actions.

Design-Builder shall implement and document changes to procedures and processes resultant of corrective and preventive action. Changes shall be submitted to the Department for review and comment.

2.2.8.2 Corrective Action

Design-Builder shall take action to eliminate the cause of nonconformance in order to prevent recurrence. Corrective actions shall be appropriate to the effects of the nonconformance. A corrective action report shall be submitted to the Department for review. A documented procedure shall be established to define requirements for:

1. Reviewing the nonconformance
2. Determining the root cause of the nonconformance
3. Performing statistical trend analysis of the nonconformance
4. Evaluating the need or action to ensure the nonconformance does not reoccur
5. Identifying and implementing the action needed
6. Reviewing the effectiveness of the corrective action taken

2.2.8.3 Preventive Action

Design-Builder shall determine action to eliminate the cause of potential nonconformance and prevent occurrence. Preventive actions shall be appropriate to the effects of the potential problems. A preventive action report as described below shall be submitted to the Department for review.

A documented procedure shall be established to define requirements for:

1. Determining potential nonconformances and their causes
2. Evaluating the need for action to prevent the occurrence of nonconformance
3. Performing statistical trend analysis to prevent potential nonconformance
4. Identifying and implementing the action needed
5. Keeping records of results of action taken
6. Reviewing effectiveness of the preventive action taken

2.2.9 Handling, Storage, Packaging, Preservation, and Delivery

2.2.9.1 General

Design-Builder shall establish and maintain documented procedures for the handling, storage, packaging, preservation, and delivery (HSPPD) of a product.

The procedures developed shall apply to all parties involved on the Project, beginning with Design-Builder drafting the Construction Documents, all the way through to the personnel responsible for the start-up and turnover of the facility to the Department at the completion of construction, and for those elements within the Site at Final Acceptance. The specific application of the requirements shall be determined by the function performed: Design-Builder, Subcontractors, Suppliers, manufacturers, distributors, warehousing, equipment operators, and installers.

Procedures shall be developed and implemented for designating which items require special handling, storage, or maintenance. The development of the HSPPD procedures and work instructions are affected by the other elements of this Section 2, and therefore shall be reviewed for applicability and requirement for inclusion.

2.2.9.2 Handling

Design-Builder shall provide methods of handling products that prevent damage or deterioration.

Special handling clothing and precautions shall be identified for all Hazardous Materials, with assurances that only qualified and trained personnel handle such material. The handling procedures shall include instructions to follow for decontamination and the notification of authorities and responsible parties in the event of release or an accident.

2.2.9.3 Storage

Design-Builder shall use designated storage areas or stock rooms to prevent damage to or the deterioration of product, pending use or delivery. Appropriate methods for authorizing receipt to and dispatch from such areas shall be stipulated.

To detect deterioration, the condition of product in stock shall be assessed at appropriate intervals.

Items requiring protection shall be identified and protected as necessary to prevent loss, damage, deterioration, or the loss of identification.

Special storage requirements shall be clearly defined for materials and equipment that are received on the Project; this includes plans, records, and operating manuals.

Materials shall be segregated to prevent cross-contamination or environmental contamination.

Material with limited shelf life shall be identified and procedures developed and implemented to identify the means of ensuring the usage of material before its expiration date. The procedures shall also identify the disposal of materials that may be toxic, hazardous, or might otherwise have an adverse effect on the environment or on unsuspecting humans.

2.2.9.4 Packaging

Design-Builder shall control packing, packaging, and marking processes (including materials used) to the extent necessary to ensure conformance with the requirements of the Contract Documents.

Engineering or procurement documents shall specify applicable packaging requirements to ensure no damage, contamination, or deterioration occurs in the course of packaging and transporting the material and equipment. Procedures/work instructions shall clearly define all special packing and packaging and marking process requirements, including export crating, moisture barrier, regulatory requirements, climate control, identification, and all requirements of the Contract Documents.

The labeling of Hazardous Materials, special handling instructions, and the notification of authorities and Design-Builder shall be clearly and plainly identified on the packaging.

2.2.9.5 Preservation

Design-Builder shall apply appropriate methods for the preservation and segregation of product when the product is under Design-Builder's control.

Procedures shall include special unpacking instructions, the controlled conditions necessary to prevent or deter the deterioration of material or equipment and prevention of corrosion and, as applicable, contamination, and required servicing.

2.2.9.6 Delivery

Design-Builder shall arrange for the protection of the quality of product after final inspection and testing. This protection shall be extended to include delivery to destination when the final inspection and testing is not onsite.

Design-Builder shall develop and implement procedures to protect the items during delivery to the Site.

2.2.10 Quality Audits and Monitoring

2.2.10.1 Quality Audit Plan

2.2.10.1.1 Specific Requirements

Design-Builder shall provide a Quality Audit Plan to the Department according to the submission schedule in Table 2-1 and provide the Department an updated Quality Audit Plan for review at 12-month intervals, or when altered thereafter. The Quality Audit Plan shall detail the internal quality audits and the external quality audits that will be conducted by Design-Builder on its own processes and those of its Subcontractors, consultants, Suppliers, and service providers, and the planned dates of such quality audits.

2.2.10.2 Design-Builder's Quality Audits

2.2.10.2.1 General

Design-Builder shall conduct internal quality audits and external quality audits of its own processes and those of its Subcontractors, consultants, Suppliers, and service providers in accordance with the requirements of this Section 2 and the QMS documentation delineated in Table 2-1, including the Quality Audit Plan referred to therein. These audits shall be conducted at least annually. The purpose of Design-Builder's quality auditing process is to confirm all activities comprising the Work are in compliance with the requirements of the Contract Documents, the Quality Manual, and QMPs; to identify all instances of Nonconforming Work and necessary corrective actions and preventive actions; and to facilitate continuous improvement.

Upon the completion of any quality audit, Design-Builder shall document the results of such quality audit in a Quality Audit Report detailing the particulars of the audit, including any findings, observations, or nonconformances observed, and submit the report to the Department for review according to the submission schedule in Table 2-1.

2.2.10.2.2 Specific Requirements

- The Quality Manager shall schedule internal quality audits and external quality audits to ensure that all key processes are reviewed regularly (at least annually).

- Where nonconformance has been observed, follow-up audits shall be scheduled to ensure corrective or preventive actions are carried out effectively and in the required time.

- Internal and external quality audits shall be scheduled taking into account the status and importance of the processes being audited as well as the results of previous audits.

2.2.10.3 Department's Quality Audits

2.2.10.3.1 General

The Department shall, following the submission of the QMS in accordance with this Section 2 of the Technical Provisions, review the QMS to identify the critical activities and processes described in the Quality Manual and QMPs on which Department's auditing efforts and resources are directed.

The Department shall determine the frequency of auditing through regular and ongoing review of Design-Builder's performance and the effectiveness of Design-Builder's management systems. Procedures and activities relating to the Work that show good audit performance may have the frequency of auditing decreased, whereas those that show poor performance or increased risk of Nonconforming Work may have the frequency of auditing increased.

Without limiting Design-Builder's obligations, Design-Builder shall provide and ensure all Design-Builder's Subcontractors, consultants, Suppliers, and service providers provide the Department's auditors with all documentation, records, access, facilities and assistance requested in connection with the Department's quality audit activities.

- The Department may issue a Nonconformance Report(s) as a result of observations during the audit.

- Design-Builder shall prepare and submit a corrective action plan, and, if appropriate, a preventive action plan, to the Department according to the submission schedule in Table 2-1.

- The Department reserves the right to conduct follow-up reviews within a reasonable, but not less than 5 days' notice to Design-Builder to determine if Design-Builder's corrective action plan or preventive action plan has been implemented and completed.

2.2.10.4 Types of Quality Audits

The following two types of quality audits may be conducted by, or on behalf of, the Department at its discretion:

- Surveillance quality audits – Scheduled or unscheduled field audits conducted on a random basis or on specific areas of interest throughout the Project Term. The objective of these surveillance audits is to monitor Design-Builder's activities involving the Work, including but not limited to workmanship, performance measures, and general quality of materials. The Department shall, during the performance of surveillance quality audits, record any observations and inform Design-Builder of any Nonconforming Work requiring further evaluation. Noted Nonconforming Work shall be resolved to the satisfaction of the Department through evidence of Design-Builder's nonconformance evaluation findings or the Nonconforming Work process.

- QMS audits – Scheduled audits conducted at specific times to assess Design-Builder's quality performance and compliance with the QMS. The Department's lead auditor shall

contact the Quality Manager and confirm the scope and schedule of the audit, and schedule for associated audit meetings. At the audit opening meeting with Design-Builder, the Department's lead auditor shall review the audit scope and objectives. The Department's auditors shall conduct audit interviews, and document any observations on prepared checklists. At the end of the audit interviews, the Department's lead auditor shall evaluate the observations and identify observed procedural or performance Nonconforming Work that requires corrective action. At the audit closing meeting, occurring as soon as reasonably possible after completion of the audit, the Department's lead auditor shall discuss the audit observations and inform Design-Builder of Nonconforming Work and the auditor's recommendations.

Additional information relating to Department quality audits with respect to particular QMPs is identified in Attachments 02-1 through 02-5. The Department's quality audits are in addition to and do not replace any other audit or oversight rights retained by the Department pursuant to the Contract Documents.

This page intentionally left blank.

3 DESIGN QUALITY MANAGEMENT

3.1 Designer Responsibilities

Design-Builder shall perform design quality management, providing high-quality Design Documents, facilitating Construction Work, prolonging the useful life of the Project infrastructure, and minimizing risks to the Department, the public, and stakeholders. The Design Work shall be performed in accordance with the requirements of the Contract Documents, including Section 2.1.2 of the Contract, Good Industry Practice, Governmental Approvals, Government Rules, and the approved PMP and components thereof.

It shall be Design-Builder's responsibility to provide Design Documents, Plans, and Construction Documents to develop a finished product in accordance with the requirements of the Contract Documents and Design-Builder's DQMP. The DQMP is a component of the PMP and the QMS. Design-Builder shall verify pertinent dimensions in the field before the review of Design Documents, Plans, and Construction Documents. A review of Design-Builder's Design Documents, Plans, and Construction Documents shall not relieve Design-Builder of the responsibility for the satisfactory completion of the Work.

Design Documents, Plans, and Construction Documents shall be subject to the Department's Design Review before beginning Construction Work covered by the Plans, and shall not be thereafter amended or altered without prior approval from Design-Builder's Designer and subsequent Design Review by the Department.

Design-Builder shall perform the following:

1. Manage the Design Work, Design Work checking, Design Work QC, and Design Work QA.

2. Coordinate with and obtain necessary Governmental Approvals (excluding Department-Provided Approvals) from, but not limited to, authorities having jurisdiction for temporary road diversions and detours, shutdowns, utility relocations, temporary sidewalk closures, and pedestrian/bicycle detours.

3. Ensure that the Designer properly checks the Design Documents for the Project and that the DQM certifies QC and QA process and procedures have been completed in accordance with the Contract Documents and the DQMP before the Department's review.

The procedures for the checking of the Design Documents of permanent components also apply to the Design Documents of major temporary components and construction sequences that affect the permanent components of the Project.

3.2 Design-Builder's Design Organization and Obligations

3.2.1 Designer

Design-Builder shall appoint a suitably qualified and experienced Designer, who may be a consultant or from an in-house design team, to undertake the Design Work. Design-Builder shall require the Designer, as necessary, to maintain representation throughout the duration of the Contract to ensure Design-Builder can meet all its obligations under the Contract Documents.

3.2.2 Lead Engineer

Design-Builder shall designate and assign a Lead Engineer to manage all Work performed by Design-Builder's Designer. The Lead Engineer is a Key Personnel position. The Lead Engineer shall be located in the Project Office for the Design Work, and shall be present as required thereafter to manage Design Work support during construction, design changes, and the completion of Record Drawings.

The Lead Engineer and staff working under the direct supervision of the Lead Engineer shall assess and evaluate the Design Work such that the Lead Engineer can certify to Design-Builder and to the Department that the Design Documents satisfy the requirements of the Contract Documents, including, and without limitation to, the following requirements:

1. Accuracy
2. Adequacy
3. Conformance to Good Industry Practice
4. Compliance with Project Standards and applicable Government Rules, including codes and standards
5. Quality
6. Function, as specified or implied in the Contract Documents

The Lead Engineer shall provide written certification of these requirements for all Work being subjected to a Design Review. The Lead Engineer's activities shall include, at a minimum, an assessment and evaluation of the following:

1. Design reports
2. Analytical approach, details of Design Documents for conformity with requirements of the Contract Documents
3. Construction Documents and Plans for conformity with requirements of Contract Documents
4. Effect of major temporary components on permanent components
5. Field design changes
6. Design approval for materials and procedures
7. Record Drawings for conformity with Final Design Documents, requirements of Contract Documents, and the DQMP

3.2.3 Responsible Engineer

Design-Builder shall designate and assign a Responsible Engineer for each Design-Builder-designated Design Unit. The Responsible Engineer will be the licensee who had responsible charge of the work in accordance with the applicable Nevada laws and regulations.

The Responsible Engineer shall designate the appropriate licensee for specific technical Design Work in accordance with the applicable Nevada laws and regulations who shall sign and seal design reports, Plans, and Project specifications as applicable.

The Responsible Engineers shall coordinate the Work on assigned Design Units and shall attend all Design Reviews for, the assigned Design Units.

Design-Builder shall ensure that each engineer who had responsible charge of the work in accordance with the Nevada Revised Statute (NRS) Chapter 625 for structures included in a Design Unit is available to respond to requests for information and potential modifications to designs during construction of the bridges and structures.

3.2.4 Design Quality Manager

Design-Builder shall assign a DQM who shall meet the qualifications set forth in Section 1.6.4 (*Lead Personnel Qualifications*). The DQM shall report to the Quality Manager and have experience in a similar role on a successful project of similar scope and have successfully completed an ISO 9001 Lead Auditor Course. The DQM shall be independent from all Design Work and the production of the Design Documents.

The DQM shall be responsible for providing QA direction in accordance with the DQMP for all Design Work performed by Design-Builder. The DQM shall be present in the Project Office as required to manage Design QA related to design support during Construction Work, design changes, and the completion of Record Drawings.

Design-Builder's DQM shall assess and evaluate Design-Builder's Design QA and QC activities to certify to Design-Builder and the Department that the Design QA and QC activities comply with the DQMP and the requirements of the Contract Documents.

Design-Builder's DQM responsibilities shall, at a minimum, include:

1. The DQM shall have QA responsibilities related to the following:
    a. Design of permanent and major temporary components
    b. Changes in design of permanent components
    c. Record Drawings
2. The DQM shall also perform the following activities:
    a. Certify and independently verify that the DQMP procedures are being met
    b. Identify and report nonconformance with the requirements of the Contract Documents
    c. Track, monitor, and report the status of outstanding design-related Nonconformance Reports
    d. Issue monthly Progress Reports, detailing progress of Project design, in accordance with Section 1.6.5.2 (*Progress Report*) of these Technical Provisions.
    e. Submit specified certificates documenting the design QA and QC review for all Design Work

3.2.5 Landscape Architect

The Landscape Architect has responsible charge of the work in accordance with the applicable Nevada laws and regulations for the L&A Work. The Landscape Architect shall sign and seal reports, Plans, and Project specifications for the assigned L&A Work. The Landscape Architect shall be involved in each Design Unit and available to respond to requests for information and potential modifications to designs during Work.

3.2.6 Designer Quality Control Checking

The requirement that Design-Builder shall engage and use a DQM does not relieve Design-Builder or the Designer from carrying out all the design QC checks and reviews that are consistent with Good Industry Practice and that a professional and prudent designer would normally carry out on the type of Work that is actually being designed.

3.2.7 Structures Engineers assigned to Structures Design Units

Design-Builder will ensure that each engineer who had responsible charge of the work in accordance with NRS Chapter 625 for structures included in a Design Unit is available to respond to requests for information and potential modifications to designs during construction of the bridges and structures.

3.3 Design Units

Design-Builder shall package all designs, drawings, and other related documents for the Work into separate Design Units. Within 45 days of NTP1, Design-Builder shall submit a written report to the Department identifying each Design Unit. The Department will review and comment on the Design Units proposed by Design-Builder. Each Design Unit shall consist of similar and coherent significant parts of the Project that can be checked and reviewed as a self-contained package, with due consideration for accommodating interfaces with other Project Work.

The written report shall include, at a minimum, the following:

1. The scope description of all the Design Work within each Design Unit, including limits and interface points

2. Planned review stages and dates, including specific information to be reviewed, review dates (measured from NTP1 date) specified in the Contract Documents, and percent complete represented by each review

3. The Responsible Engineer who is authorized and qualified to carry out the Design Work

4. The location(s) where the Design Work will be performed

Design-Builder shall submit any revisions to the information provided in response to the requirements in this Section 3 in writing to the Department concurrently with the monthly Progress Report.

3.4 Relationship of Early Construction Starts to Design Development and Review

It is the intent of the Department to allow Construction Work to begin on a Design Unit before the Department's Design Review of the Final Design. Construction Work on any Design Unit or component thereof may begin at any time after completion of the applicable Design Review of the Released-for-Construction Design, and after Design-Builder has sufficiently addressed and incorporated the Department's comments. Construction may progress in increments determined by Design-Builder before the Final Design, at Design-Builder's risk, provided each increment of construction is covered by Plans and Construction Documents that have been reviewed by the Department and meet the requirements to be Released-for-Construction.

3.4.1 Released-for-Construction Rough Grading

In order for Design-Builder to proceed with the rough grading of a portion of the Project, the following specific items of the Design Work for the portion of the Project to be released must have been previously reviewed by the Department:

- Horizontal and vertical alignment
- Typical sections
- Related elements of the drainage system
- Related elements of the final Transportation Management Plan (TMP)
- Subsurface geotechnical investigations and recommendations
- Slope stability analysis and recommendations
- Preliminary structure general plan, bridges, walls, and drainage structures (if a structure is within the element or portion of the nonstructural Work)
- Settlement monitoring program
- Construction specifications (for fills)
- Environmental clearance
- Duration of construction

3.5 Schedule for Design Checks, Design Reviews, and Submission of Checked Design

Design-Builder is responsible for scheduling and conducting design checks and Design Reviews to meet the design and construction needs of the Project Schedule. It is recognized and anticipated that the Design Review process and the frequency, duration, and intensity of Design Reviews may vary with the complexity of the individual Design Units and the associated construction activities. The duration of typical Design Reviews shall be in accordance with Section 3.2.2 of the Contract, unless otherwise agreed to by the Department during the Design Workshop described in Section 3.16 (*Design Workshop*) and confirmed in writing. Design-Builder

shall give a written notice of scheduled Design Reviews to the Department at least 1 week before any review.

Design-Builder shall include the agreed-upon Design Review Plan and Schedule for all Design Units, including their components, design safety assessment, and elements, as part of the Project Schedule. The Design Review Plan and Schedule shall be reviewed jointly by both the Department and Design-Builder at least once a month.

Except for Record Drawings, Design Documents that are to be reviewed during Design Reviews shall be submitted with sufficient copies, as defined in Section 3.19.2 *(Design Documents – Format, Organization, and Quantity)*, and shall be assembled for review in the Project Office.

Design-Builder shall only conduct Design Reviews on Design Documents that have been checked. No Design Documents shall be submitted for Design Review before approval of the DQMP. Design Documents shall be complete for each Design Unit, but may be combined for multiple Design Units at any one time upon the Department's written concurrence. A portion of a Design Unit may be reviewed where that portion has been identified for Released-for-Construction. Design-Builder shall include a review of each Design Unit for consultation and written comment in accordance with the Project Baseline Schedule.

For each Design Unit designated by Design-Builder, Design-Builder shall include design checks and Design Reviews as indicated in Section 3.12 (*Design Checks, Certifications, and Design Reviews*), and such additional reviews as may arise as indicated in this Section 3 . Design-Builder shall allow the time for the Department's participation and input to any design check conducted by Design-Builder's Designer. Design-Builder shall incorporate this schedule into Design-Builder's Project Schedule and report progress and updates in the monthly Progress Reports. Design-Builder shall keep the Department updated as to the exact timing of the reviews and Released-for-Construction Design Reviews through the weekly progress meetings.

3.6 Revisions to Design

Design-Builder shall treat any revisions to the design initiated by Design-Builder and already checked by the Designer and certified by the DQM as an entirely new design. Such circumstances shall not form the basis of a Relief Event or otherwise entitle Design-Builder to additional compensation or a time extension.

3.7 Department's Design Review Plan and Schedule

As a component of the DQMP, Design-Builder shall prepare and submit a written Design Review Plan and Schedule within 45 days of NTP1 for review and comment by the Department. The Design Review Plan and Schedule shall address the Department's Design Reviews, design stages, plan completeness, and the QA/QC process for each Design Unit. The Design Review Plan and Schedule shall describe the level of design that the Designer shall accomplish for each of the planned stages of design development and provide a description and checklist for each Design Unit that clearly identifies the Design Documents that will be reviewed. The Design Review Plan and Schedule shall include review times for each design check and the Department's Design Review, including the review dates and durations for the Department, unless noted otherwise in these Technical Provisions or otherwise agreed to by the Department at the Design Workshop in accordance with Section 3.5 (*Schedule for Design Checks, Design Reviews, and Submission of Checked Design)*.

3.8 Design Development Phases

Design-Builder shall perform Design Work and submit Design Documents based on the five phases of design development listed in Table 3-1. Design-Builder shall perform a design check and allow for the Design Review for each Design Unit at each phase of design development specified herein or as proposed by Design-Builder, and as agreed to in the Design Workshop in accordance with Section 3.5 (*Schedule for Design Checks, Design Reviews, and Submission of Checked Design)*. At each phase of design development, Design-Builder's design check shall verify that the Design Documents and Construction Documents comply with the requirements of the Contract Documents.

Table 3-1 Design Development Phases

Phase	Description
1	Stage 1 Design
2	Stage 2 Design
3	Released-for-Construction Design
4	Final Design
5	Working drawings
6	Record Drawings

At each phase of design development the Department's Design Review may, as applicable:

1. Verify that the Design Documents and Construction Documents comply with the requirements of the Contract Documents;

2. Allow components of Design Units to be Released-for-Construction; or,

3. In the case of reviews of working drawings, allow construction to continue.

Design-Builder shall allow Design Reviews and perform design checks for each Design Unit (and for each component or element within a Design Unit). Design-Builder shall schedule the Design Review and delivery of Submittals to be consistent with the Project Baseline Schedule and timeframes for Department action on those Submittals.

3.9 Design Reviews

Design-Builder shall allow the Department to perform Design Reviews of the Design Documents prepared for the Stage 1 Design, Stage 2 Design, Released-for-Construction Design, working drawings, and Final Design in accordance with the process outlined below unless a different process is mutually agreed to by the Parties.

The Design Review process to be implemented for the Stage 1 Design involves a briefing of the Design Work activities by Design-Builder to the Department. The Responsible Engineer of the Design Unit being reviewed and other Design-Builder staff shall make informal, brief presentations during the development of the design. These presentations shall include an explanation of the component(s) being reviewed, highlighting any critical points or other information that may be of particular interest to the review participants. These briefings shall occur a minimum of 10 days in advance of a planned submittal date of Design Documents. Design-Builder shall document comments provided by the Department as part of the briefing.

Design-Builder shall provide the Department complete Submittals of the Design Documents prepared for the Stage 1 Design, Stage 2 Design, Released-for-Construction Design, working drawings, and Final Design in accordance with Section 3.5 (*Schedule for Design Checks, Design Reviews, and Submission of Checked Design*). The Responsible Engineer shall be available to brief the Department on the materials contained in the Design Documents as part of the Design Review. The Department's written comments will be provided to Design-Builder within the periods specified in Section 3.2.2 of the Contract or as otherwise agreed to during the Design Workshop in accordance with Section 3.16 (*Design Workshop*). Design-Builder shall respond to all the Department's comments.

Design-Builder's Submittals described in this Section 3.9 (*Design Reviews*) for Stage 1 Design, Stage 2 Design, Released-for-Construction Design, and Final Design shall also include the following:

- **Electronic file index** – listing of electronic files with a brief description for all files provided with the Submittal;
- **Microstation plan fil**es – in Microstation (.dgn) format;
- **Vehicle tracking data** – vehicle turning movements displayed in Microstation (.dgn) format;
- **Cross section**s – cut every 50 feet and at critical points (taper points, superelevation breaks, etc.) in .pdf format;
- **Alignment data** – primary and secondary alignments in InRoads geometry project (.alg) format;
- **Surface data** – design surfaces in InRoads surface (.dtm) format including components; existing ground surface in InRoads surface (.dtm) format; and
- **Corridor map index** – exhibit showing finish grade triangles for design finish grade surfaces provided with surface data, described above, in pdf format.

After receipt of the Department's Design Review comments, the Responsible Engineer and other members of Design-Builder's staff shall lead comment resolution meetings with the Department's review participants to present and resolve comments. These comment resolution meetings may be waived as mutually agreed upon between Design-Builder and the Department, but any waiver of this meeting by the Department does not release Design-Builder from appropriately resolving the Department's comments. Design-Builder shall document all resolutions or future resolutions actions to the comments received and provide this documentation to the Department.

All Design Reviews will include a comment and Nonconforming Work resolution process where unresolved comments and Nonconforming Work are discussed and a written action plan and schedule for resolution of unresolved comments and Nonconformance Report(s) are developed in accordance with Section 3.12.4 (*Detected Nonconforming Work and Comment Resolution*). The DQM will lead the process.

3.9.1 Stage 1 Design

The Design Review of the Stage 1 Design shall be the first Design Review after award and is intended to verify that the design concepts proposed by Design-Builder meet the requirements of the Contract Documents. The Stage 1 Design Review shall verify the following:

1. Design concepts are compatible with Future Improvement Phases as set forth in Section 1.2.2 (*Future Improvement Phases*), Section 9.3.2.3 (*I-15 Freeway Future Improvements*), and Section 9.3.4.1 (*Local Future Improvements*) and meet the requirements of the Contract Documents;

2. Project design development is consistent with the requirements of the Contract Documents;

3. Design concepts are substantiated and justified by adequate Site investigation and analysis;

4. Final Project ROW requirements are established;

5. Project Standards applicable to the proposed design concepts are identified and appropriate;

6. Proposed design concepts are constructible; and

7. Design meets Project quality requirements and required procedures of the DQMP.

The Design Work and Design Documents for Stage 1 Design Submittals shall include, but are not limited to, the following:

1. Design Documents with the Design Work developed for each Design Unit to a preliminary plan level of completeness as described in the Project Standards and these Technical Provisions. They include Plans, technical memoranda, reports, studies, calculations, and other pertinent data as applicable with the Stage 1 Design Review.

2. Any Design Documents required to be submitted with Stage 1 Design Submittals as described in these Technical Provisions.

3. Submittals described in Section 25 (*Submittals*).

If the Stage 1 Design is revised subsequent to the Stage 1 Design Review, Design-Builder shall recheck and recertify the design as an additional Stage 1 Design Review. Unless the revisions resulted from a Department Change, such revisions shall not form the basis of a Relief Event or otherwise entitle Design-Builder to additional compensation or a time extension.

3.9.2 Stage 2 Design

Design-Builder shall schedule Stage 2 Design Reviews when the Design Work is sufficiently advanced from the Stage 1 Design and in advance of Released-for-Construction or the Final Design to provide the opportunity to verify that the design is advancing according to the requirements of the Contract Documents, considering the type of design element.

The Design Work and Design Documents for Stage 2 Design Submittals shall include, but are not limited to, the following:

1. Comment resolution form describing how the Stage 2 Design Submittal has addressed the review comments generated during the Design Review for Stage 1 Design.

2. Design Documents with a design development to an intermediate plan submittal level of completeness of approximately 65 percent unless otherwise indicated in these Technical Provisions, as described in the Project Standards and these Technical Provisions. They

include Plans, Project Neon-DB Special Provisions, Project Neon-DB Standard Drawings, general notes, technical memoranda, reports, studies, calculations, and other pertinent data as applicable with the Design Review of Stage 2 Design

3. Amended and/or supplemented Standard Drawings.

4. Any Special Provisions.

5. Any Design Documents required to be submitted with Stage 2 Design Submittals as described in these Technical Provisions.

6. Submittals described in Section 25 (*Submittals*).

Design-Builder and the Department shall use the Design Review of the Stage 2 Design to verify that the concepts and parameters established and represented by the Stage 1 Design are being followed and that requirements of the Contract Documents continue to be met. Design-Builder shall specifically highlight, check, and bring to the attention of the Department in writing any changes to information presented at the Stage 1 Design. Design-Builder shall submit the Stage 2 Design for review and comment by the Department.

3.9.3 Released-for-Construction Design

When all comments from the Stage 2 Design Submittal have been addressed and appropriately incorporated, Design-Builder shall submit the Released-for-Construction Design Submittal for review and comment by the Department. The Released-for-Construction Design Submittal for each Design Unit includes the following items, if applicable, and other items as reasonably required by the Department:

1. Comment resolution form describing how the Released-for-Construction Design Submittal has addressed the review comments generated during the Design Reviews of the Stage 1 Design and Stage 2 Design.

2. Any Nonconformance Reports have been addressed and resolved to the satisfaction of the Department.

3. Design Documents with a design development to a Released-for-Construction Submittal level of completeness as described in the Project Standards and these Technical Provisions, including all comments and Nonconforming Work addressed as defined in Section 3.12.4 (*Detected Nonconforming Work and Comment Resolution*). They include Plans, Project Neon-DB Special Provisions, Project Neon-DB Standard Drawings, general notes, technical memoranda, reports, studies, calculations, and other pertinent data as applicable with the Release-for-Construction Design Review.

4. Amended and/or supplemented standard drawings.

5. Any Special Provisions.

6. Any Design Documents required to be submitted with Released-for-Construction Design Submittals as described in these Technical Provisions.

7. Submittals described in Section 25 (*Submittals*).

8. Independent design with check calculations for bridge structures identified in Section 14.3 (*Design Requirements*).

Design-Builder and the Department shall use the Design Review(s) of the Released-for-Construction Design to verify that the concepts and parameters established and represented by Stage 1 Design, or Stage 2 Design as applicable, are being followed and that the requirements of the Contract Documents continue to be met. Design-Builder shall specifically highlight, check, and bring to the attention of the Department in writing any changes to information presented at the Stage 1 or Stage 2 Design. The Design Review of the Released-for-Construction Design may be conducted at any level of design of the Design Units, suitable to proceed to construction.

Design-Builder shall not construct any permanent components or major temporary components until the design checks (QC), Design Reviews, and the DQM's certifications have been completed for the relevant Design Unit, or component thereof, and until any issues raised in the Department's review and comments on the design have been resolved to the Department's satisfaction. Additionally, Design-Builder shall not begin any construction until any Design-related Nonconformance Reports have been addressed and resolved to the Department's satisfaction.

After completion of all such requirements, Design-Builder's Lead Engineer shall stamp, sign, and date the Design Documents as "Released-for-Construction," certifying that all requirements of the Contract Documents have been satisfied. Subsequent revisions to Released-for-Construction documents shall clearly indicate revisions and include a complete history of revisions since first issuance in the title block and shall follow the same Design Review process of the Released-for-Construction Design described in this Section 3.

3.9.4 Final Design

Design-Builder shall schedule and conduct a Design Review of the Final Design when the Design Documents and Construction Documents for a Design Unit are 100 percent complete. Design-Builder shall specifically highlight, check, and bring to the attention of the Department in writing any changes to information presented at previous Design Reviews. Design-Builder shall present the Final Design for review and comment by the Department.

Design-Builder's Lead Engineer shall provide certification that the Final Design Documents comply with the requirements of the Contract Documents. Construction packages for individual Work items, Elements, or unit shall be organized such that the final document package can be assembled in a manner similar to the standard construction documentation typically provided to the Department for conventional project letting, as mutually agreed upon by Design-Builder and the Department.

When Design-Builder has completed the Final Design Documents for an item, Element, or unit and wishes to obtain the Department concurrence of such a design, the DQM shall certify through the QA process that:

1. The design meets all applicable requirements of the Contract Documents
2. The design has been checked by Design-Builder's Designer in accordance with the DQMP
3. The item or element is ready for construction

Before certifying the above items, Elements, or phases, and upon review and comment of the Final Design Document Submittal by the Department and the DQM, Design-Builder's Lead Engineer shall schedule a formal review with the Department and the DQM.

The Final Design Documents shall be complete Design Documents incorporating all of the design submittal review comments. All documentation, including copies of the Department's approval of

Deviations of Project Standards for design and/or design exceptions, shall be provided with the Final Design Document Submittal.

3.10 Working Drawings

Construction Documents include working drawings that include, but may not be limited to, the supplemental design products listed below:

- Construction details
- Erection plans
- Fabrication plans
- Field design change plans
- Stress sheets
- Shop plans
- Lift plans
- Bending diagrams for reinforcing steel
- Falsework plans
- Materials samples
- Similar data required for the successful completion of the Work

Design-Builder shall check, review, and certify working drawings before they are issued for construction.

The Department will review and comment on the working drawings in accordance with Section 3.2.2 of the Contract.

3.11 Record Drawings

Design-Builder shall submit the Record Drawings for each Design Unit in accordance with the requirements of the Contract Documents. Design-Builder shall keep Record Drawings up to date, and accessible to the Department for review, at all times. Record Drawings shall include but not limited to the following types of Plans:

- Plan and profiles
- Pavement typical sections
- Bridges
- Retaining structures
- Utility Adjustments
- Drainage structures
- Signing and striping
- ITS, lighting, and signals

Design-Builder shall also submit final as-built three dimensional surface data in InRoads surface (.dtm) format.

Refer to Section 3.12.2.2 (*Record Drawing Reviews*) and Section 20.4.2 of the Contract for additional requirements relating to Record Drawings and information. Refer to Section 622 in Attachment 26-2 (*City of Las Vegas Special Provisions*) for additional requirements relating to GPS location and mapping of as-built conditions that Design-Builder shall include with Record Drawings for Local Agency Project Infrastructure.

3.12 Design Checks, Certifications, and Design Reviews

Design-Builder shall ensure that the Designer's organization checks all Design Documents, including drawings, Plans, specifications, calculations, and reports produced by Design-Builder's organization. The DQM shall certify that the Design QA and QC activities comply with the DQMP and the requirements of the Contract Documents and this Section 3.

Design-Builder and the Department shall follow the process shown in Figure 3-1 for design checks conducted by Design-Builder and the Department Design Reviews. This applies to all design checks and Design Reviews except for Record Drawing reviews.

Responses to and the disposition of comments and all Nonconforming Work shall be as described in Section 3.12.4 (*Detected Nonconforming Work and Comment Resolution*).

Figure 3-1 Design Check/Review Flowchart

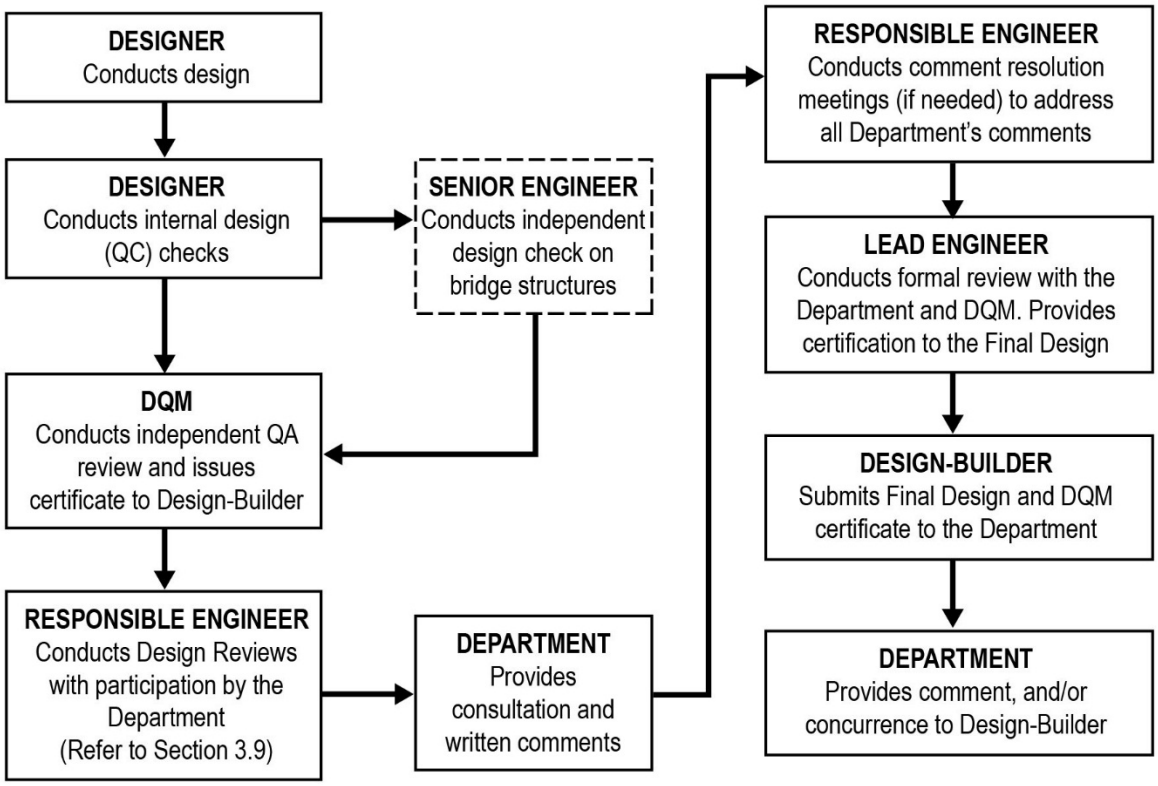

Design-Builder and the Department shall follow the process shown in Figure 3-2 for submitting Record Drawings for the Department Design Review.

Figure 3-2 Design Review Flowchart for Record Drawings

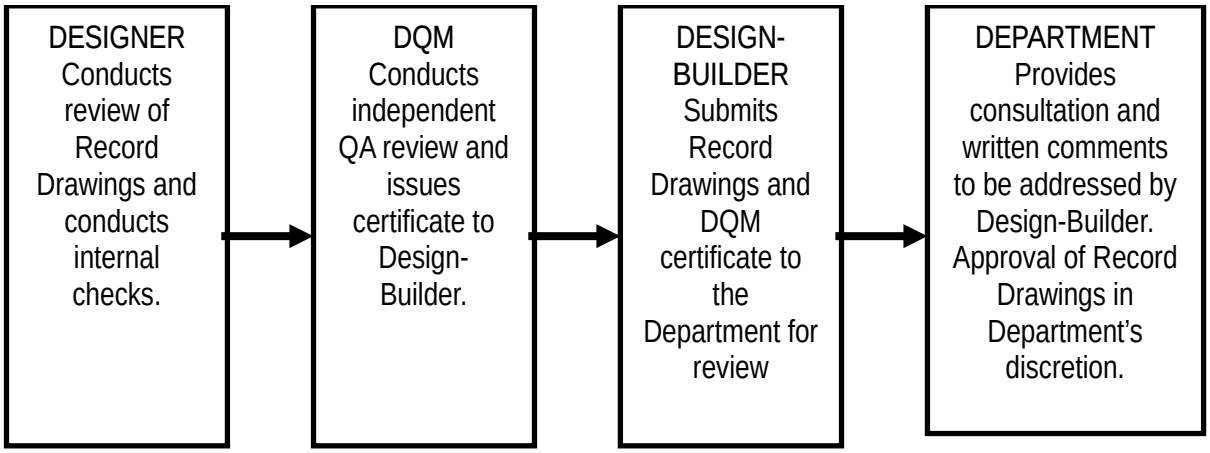

Design-Builder shall conduct and complete the design checks, certifications, and reviews for each Design Unit by the entity specified in the columns entitled "Design Check" and "Certification to Design-Builder" shown in Table 3-2. The Department will provide review and comment on the design before Design-Builder releasing designs for construction.

Design-Builder shall conduct its design check or submit its design for Design Review in accordance with Table 3-2, supported by a written certification issued by the DQM at the stages of design development shown in Table 3-2 for each Design Unit in accordance with the Design Review Plan and Schedule and the Project Baseline Schedule.

Table 3-2 Design Checks (QC), DQM, Certifications, and Design Reviews for Permanent and Temporary Components

Stage of Design Development	Design Check	Certification to Design-Builder	Design Review
Stage 1 Design	Designer	N/A	Department and Responsible Engineer
Stage 2 Design	Designer	N/A	Department and Responsible Engineer
Released-for-Construction Design	Designer	DQM and Lead Engineer	Department and Responsible Engineer
Final Design	Designer	DQM and Lead Engineer	Department and Responsible Engineer
Working Drawings and Related Documents	Designer	DQM	Department and Responsible Engineer
Record Drawings	Designer	DQM and Lead Engineer	Department
Major Temporary Components	Designer	DQM	Department and Responsible Engineer
Temporary Components	Designer and Checker	N/A	N/A

3.12.1 Design-Builder's Independent Design Checks

3.12.1.1 Design Assessment

Design assessment shall be the review of general compliance with the requirements of the Contract Documents, taking into consideration the proposed method of construction, and shall cover the following areas:

1. Loads
2. Applicable Government Rules and Project Standards
3. Methods of analysis
4. Computer software and its validation
5. Interface requirements
6. Maintenance requirements
7. Materials and material properties
8. Durability requirements
9. Fatigue performance
10. Hydrology and hydraulics
11. Design flows versus hydraulic capacity
12. Requirements and conditions of Government Approvals and the environmental commitments
13. Requirements and conditions of the Contract Documents

3.12.1.2 Analytical Check

The independent design check shall include an independent analytical check using separate calculations and without reference to the Designer's calculations to establish the structural adequacy and integrity of structural members. This shall include, but is not limited to, the following:

1. Structural geometry and modeling
2. Material properties
3. Member properties
4. Loading intensities
5. Structural boundary conditions

Design-Builder shall perform independent design checks of the bridge structures specified in Section 14.3.1.1 (*Independent Design Check*). Design-Builder shall perform design assessments of all bridge structures, including temporary structures for the Project by senior engineers who are not involved in the production of the design being reviewed, and who have either equivalent or

additional qualifications and experience than the Responsible Engineer for the design being checked.

Independent design checks of bridge structures shall be identified in the DQMP and shall comprise design assessment and analytical checks as specified in Sections 3.12.1.1 (*Design Assessment)* and 3.12.1.2 (*Analytical Check*).

3.12.2 Design Reviews

Design-Builder's time and cost impacts of revisions arising from the Department's participation in Design Reviews or caused by Design-Builder's noncompliance with the requirements of the Contract Documents shall be borne by Design-Builder and shall not form the basis of a Relief Event.

3.12.2.1 Design Checks Conducted by Design-Builder's Designer

Design-Builder shall notify and invite the Department to participate in all design checks conducted by the Designer.

For design checks conducted by the Designer (refer to Table 3-2), the Designer shall provide a design check report for each Design Unit at the conclusion of each design check. The design check reports shall identify any actions arising from the review. The report shall note items requiring corrective action on a design Nonconformance Report. The DQM shall send a copy of the design Nonconformance Report to the Department.

Design-Builder shall conduct design checks in the Project Office. The Responsible Engineer and any specialists with significant input to the design or Design Review shall be present. Design-Builder shall make available to the Department all drawings, copies of calculations, reports, or other items pertinent to the design check in accordance with the Design Review Plan and Schedule.

3.12.2.2 Record Drawing Review

Record Drawings shall incorporate complete information that reflects that the Work as constructed meets the requirements of the Contract Documents.

As a condition of Final Acceptance, Design-Builder shall submit Record Drawings, complete for each Design Unit, to the Department for review and comment.

Design-Builder shall make all corrections noted in the review of Record Drawings and resubmit the corrected Record Drawings to the Department for review and comment.

The Department's approval of the Record Drawings in its good faith discretion is a condition of Final Acceptance. Final Acceptance will not occur until the Record Drawings are submitted, reviewed, and corrected to the Department's satisfaction.

3.12.2.3 Design Review of Major Temporary Components

The Designer shall conduct a design check of major temporary components that represent complex structures and that potentially could affect the safety, quality, and durability of the permanent components. The review shall include the effect of the major temporary components

on the permanent components. Design-Builder shall invite the Department to participate in the review.

3.12.2.4 Additional Reviews

The Department may conduct additional over-the-shoulder reviews as considered necessary to ensure a continued and uniform consistency in the quality and effective incorporation of revisions to designs. Design-Builder may also conduct reviews necessary to facilitate the early release of designs for construction.

3.12.3 Released-for-Construction

Design-Builder may start the construction of any element of the permanent components only after occurrence of all of the following:

1. The Designer has conducted its design QC checks throughout the design process in compliance with the DQMP and certifies, in writing, that the Design Document is complete to the appropriate level or stage of review, checked, and ready to be Released-for-Construction.

2. The DQM has signed the title sheet for the drawings, certifying to the following (the title sheet can be formatted to include the items of certification):

   a. Design checks have been completed by the Designer.

   b. Design Work conforms to requirements of the Contract Documents.

   c. Any Deviations or design exceptions have been approved, in writing, by the Department.

   d. Design QA activities are following Design-Builder's DQMP.

   e. All outstanding issues or comments from Design Reviews have been resolved to the Department's satisfaction.

3. The Responsible Engineer has signed all drawings prepared under his/her direction. For those drawings and documents included in the Submittal that are prepared by a manufacturer or Supplier, or other persons not under the direct supervision of the Responsible Engineer, the Responsible Engineer shall affix a stamp that indicates that the design shown on the sheet or Design Document conforms to the overall design and requirements of the Contract Documents.

4. Design-Builder has verified in writing the following:

   a. The Design has undergone constructability review and is constructible as represented.

   b. The Design Documents, Construction Documents, and related documents for the portion of the Project to be constructed are complete and checked.

   c. The design and drawings for MOT and temporary erosion control and environmental measures applicable to the Work are complete.

   d. Adequate stakes, lines, and monuments necessary to control the Work have been established on the Site.

e. Design-Builder has addressed the Department-provided written comments regarding the Design Documents and applicable MOT plans, temporary erosion control measures, and environmental requirements to the Department's satisfaction.

5. Design-Builder's Lead Engineer stamps the Design Documents as "Released-for-Construction."

Any design Nonconformance Reports issued by the DQM or the Department shall be addressed and resolved by Design-Builder to the satisfaction of the Department before any design is Released-for-Construction.

3.12.4 Detected Nonconforming Work and Comment Resolution

All comments from Design Reviews will be recorded on the design review form included in the RIDs or similar form and transmitted to Design-Builder. If Nonconforming Work is detected during the Design Review, the Department may issue design Nonconformance Reports using the form included in the RIDs or similar form and submit it to Design-Builder for action. Design-Builder must record proposed disposition and response to each comment or Nonconforming Work and meet with the Department to resolve outstanding comments and dispositions. Design-Builder shall document the final disposition and resolution on the design review form.

All Design Reviews shall include a comment and Nonconformance Report resolution process wherein unresolved comments and Nonconformance Reports are discussed and a written action plan and schedule for the resolution of unresolved comments are presented in accordance with Section 3.3 of the Contract. All Nonconforming Work shall be addressed and resolved before the design is Released-for-Construction. The DQM shall lead the process.

Final disposition and resolution shall be documented by Design-Builder pursuant to Section 3.3.8 of the Contract. The Department will close a Nonconformance Report only if the issue has been resolved or addressed to the Department's satisfaction, in accordance with the requirements of the Contract Documents.

3.13 Design Exceptions

All proposed design exceptions to the Project Standards shall be submitted as a Deviation described in Section 1.2.10 (*Deviations to the Technical Provisions*) and in accordance with the Contract for review and approval by the Department. Design exceptions associated with FHWA controlling criteria will require FHWA review and approval. Deviations from local agency or other third party criteria shall require review and approval from the agency or third party.

All requests for Deviations and design exceptions shall be submitted with a justification report as described in Section 1.2.10 (*Deviations to the Technical Provisions*. Requests for design Deviations and design exceptions shall be submitted not later than the Design Review of the Stage 1 Design conducted by the Department, in writing, before the affected Design Units will be Released-for-Construction.

3.14 Design Changes

After a design is complete and the Design Work is ready to be executed, is being executed, or is complete, all subsequent design changes and modifications shall be identified, documented, and reviewed by authorized personnel before their implementation.

Design-Builder shall establish procedures in the DQMP detailing how design changes will be initiated, reviewed, accepted, implemented, and recorded in order to maintain configuration and version control, and shall include the identification of persons authorized to approve design changes. Changes must be dealt with in the context of its originator, so change initiated by the Department, an internal and external design organization, or site or field personnel are managed by a distinct process and shall be described in the DQMP. Design changes may result in a modification of a Governmental Approval, which modifications would be subject to Section 6.4 of the Contract.

Any proposed changes shall be reviewed and approved by the Responsible Engineer who produced the original Design Work. The degree and nature of control on design changes shall be at least equivalent to that under which the original Design Work was accomplished. An administrative system shall be in place to ensure that approved changes are documented and provided to holders of the original material in a timely manner. Also, there shall be a documented process that ensures that superseded information is removed from use when the updated document or record is received.

A master list of currently effective Design Documents shall be maintained to reflect design changes and approved modifications and shall be communicated to the construction Site in a timely manner, consistent with the progress of construction activities. Under no circumstances shall work be performed without current knowledge of the approved design changes to be incorporated into the work product.

For all design changes requiring calculations, the Designer shall conduct a documented check of all calculations. All design changes requiring the alteration of Design Documents that have been Released-for-Construction shall undergo all review procedures included for original Design Documents in Design-Builder's DQMP and Section 3.6 (*Revisions to Design*) and Section 3.12 (*Design Checks, Certifications, and Design Reviews*).

3.15 Design Support During Construction

The Lead Engineer and CQM shall verify, during Construction Work, that the conditions actually encountered are consistent with the design and related Design Documents and Construction Documents. The Designer shall prepare necessary adjustments in the Design Documents and Construction Documents, and Design-Builder shall obtain the Department's consultation and written comments. The Designer and DQM shall check any such changes in accordance with the DQMP. The DQM shall certify the change, in writing, as meeting the requirements of the Contract Documents. Design-Builder shall incorporate the adjustments in the Record Drawings. Design-Builder shall retain copies of the DQM's written certifications and submit the certifications to the Department.

3.16 Design Workshop

Design-Builder shall arrange a Design Workshop to familiarize the Designer's personnel and the Department review personnel with the design concepts, issues, status, and review procedures. The intent of the workshop is to make the subsequent Design Reviews more effective and efficient for all Parties. The Department and Design-Builder shall jointly develop the agenda of the workshop and how it is be organized (for example, by Design Unit and engineering discipline). The Design Workshop shall take place as part of the DQMP development and before commencement of Design Work.

The agenda shall include developing agreement regarding time provided in the Project Schedule for Design Reviews. The duration of Design Reviews may vary depending on items such as the stage of the design development, the size of the review package, the complexity of the subject for review, potential environmental implications, public safety concerns, and the need for review by the City of Las Vegas and the CCRFCD. The agenda shall include a discussion of the necessary Environmental Approvals, permitting processes, review times, and strategy for the mitigation of potential delays.

Design-Builder shall consider these issues and specified review times when preparing its proposed Design Review Plan and Schedule and Project Baseline Schedule, as well as when discussing durations at this workshop.

All agreements, schedules, and understandings reached during the Design Workshop shall be documented, in writing, by Design-Builder and approved by Design-Builder's Project Manager and the Department before any Design Reviews.

3.17 Quantity Estimates

To facilitate defining QC and QA sampling and testing requirements, Design-Builder shall provide a detailed schedule of pay items and quantities in a format acceptable to the Department, complete with item codes for items requiring QC and QA sampling and testing requirements before any construction activity begins.

3.18 Design Documentation

Design-Builder shall provide Design Work documentation as specified in Section 2.2.3 (*Document and Data Control*), Section 1.6.2 (*Document Management*), and as described in this Section 3.

3.18.1 Progress Tracking

Design-Builder shall include engineering and design progress and changes in its Project Status Schedule, including Work on any design change.

3.18.2 Design Quality Reports and Records

The DQM shall prepare and submit monthly monitoring reports to the Department as defined in Section 2.2.3.5 (*Quality Management System Reports*) of all design issues and review comments resulting from the scheduled and additional checks and reviews, including over-the-shoulder reviews.

Design-Builder shall also maintain an auditable record of all DQMP procedures, reviews, and checks. Design-Builder shall perform verification sampling of QC documentation to confirm that all procedures included in the DQMP have been followed.

Design-Builder shall develop, implement, and maintain a log of design Nonconformance Reports and notices indicating the dates issued, reasons, their status, or their resolution, and the date of resolution.

Design-Builder shall prepare and maintain records of design activities using forms acceptable to the Department.

The monthly monitoring reports documenting the design QA submitted by Design-Builder to the Department shall include the following:

1. Summary of reviews conducted
2. Nonconforming Work and current status and disposition, based on design Nonconforming Work log
3. Submission(s) from Design-Builder and status

3.19 Design Documents and Construction Documents

The Contract Documents establish the minimum standards of quality and define requirements that the Work shall satisfy.

During the design process, Design-Builder shall develop Design Documents and Construction Documents based on the Contract Documents that are applicable to the specific materials, products, equipment, procedures, and methods that Design-Builder intends to use.

During Design Reviews, the Design Documents and Construction Documents will be evaluated by the Department for compliance with the requirements of the Contract Documents.

3.19.1 Plans

The Work shall be performed in accordance with the details as shown on the Design Documents prepared by the Designer and those Construction Documents prepared by Design-Builder. Design-Builder shall provide Construction Documents of such a nature as to develop a finished product in accordance with the Design Documents and requirements of the Contract Documents. Design-Builder shall verify pertinent dimensions in the field before conducting a Design Review. Participation in the review of Design-Builder's Design Documents and Construction Documents by the Department shall not relieve Design-Builder of the responsibility for the satisfactory completion of the Work.

Construction Documents shall be reviewed and approved by the appropriate Responsible Engineer, as indicated by the Responsible Engineer's stamp/seal and signature, before Design-Builder begins the Construction Work. Construction Documents shall not thereafter be amended or altered without prior written approval of the appropriate Responsible Engineer and the Department's review and written comment.

All Released-for-Construction Design, Final Design, and Record Drawings shall be signed and stamped/sealed by the appropriate Responsible Engineer and shall include, on the title sheet for the Plans, the certification signatures of the Lead Engineer and the DQM (the title sheet can be formatted to cite the appropriate certification requirements of Sections 3.2.4 [*Design Quality Manager*] and Section 3.12.3 [*Released-for-Construction*]).

3.19.2 Design Documents – Format, Organization, and Quantity

Design-Builder shall provide Design Documents at a minimum as described below.

All Submittals of Design Documents shall posted to the EDMS allowing the Department access.

Electronic submittals of Design Documents including Plans, for any purpose, shall be in electronic PDF of a sufficient resolution and clarity to allow full-size printing, with accurate scale, that is indistinguishable in quality from a traditional Mylar print. Design-Builder is advised that scanning to electronic PDF using a standard multi-function copier will generally not meet this requirement.

Submittal packages of Design Documents shall have a unique alphanumeric identifier that remains with the Design Document package and identifies each Submittal step (i.e., Stage 1 Design, Stage 2 Design, Released-for-Construction Design, and Final Design). The alphanumeric identifier must remain constant and track the design package through the duration of the Work.

Each Submittal for a Design Review shall be posted and saved to the EDMS and five hard copies delivered to the Department in accordance with the requirements of the Contract Documents, including these Technical Provisions, the PMP, and the Project Baseline Schedule.

Hard copies of Design Documents submitted to the Department for Design Review shall be 11- by 17-inch format for Plans and 8.5- by 11-inch format for specifications, reports, memoranda, and other applicable Design Documents.

All Plans shall include relevant reference files and information, including but not limited to proposed Project ROW, property lines for adjacent properties, limit of disturbance, environmental features, etc., to facilitate the full and complete review of the Plans, as well as support to other Project efforts, including coordination with third parties, Governmental Entities, and public outreach.

Design-Builder shall provide Design Work in MicroStation formatted files as requested by the Department for Design Reviews along with all supporting reference file information.

Design revisions to Released-for-Construction Plans shall be indicated using redline format, with modifications shown in red and noted with a revision number near the revision and in the revision block. Design-Builder shall provide five hard copies of the Plans to the Department. Plans shall be formatted and organized such that a single, indexed, and well-organized set of Released-for-Construction Plans shall be available in electronic PDF to the Department at all times. This conformed plan set shall include plan revisions made during Construction Work and Record Drawings.

Design-Builder shall provide the Department two hard-copy (22- by 34-inch) sets of Record Drawings plans produced on Mylar material and one electronic copy of all Record Drawings as part of Final Acceptance in accordance with Section 20.4.2 of the Contract for the City of Las Vegas' Local Agency Project Infrastructure as described in Section 1 (*General Scope of Work*). The electronic copy shall be compressed tagged image file format (TIFF, black and white, 1-bit). Each plan sheet must be a separate file. Plan sheets must have borders intact. Resolution must be 400 dpi with completed TIFF plot size of 22 by 34 inches, cropped, deskewed, and despeckled. Plans must be signed and sealed by the Responsible Engineer.

3.20 Supporting Engineering Information

3.20.1 Mapping

Existing mapping information is contained in the RIDs.

3.20.2 Survey

All existing elevations and dimensions used in the Reference Design are provided for information only. Design-Builder shall verify all existing elevations, dimensions, and horizontal and vertical alignments in the field. This shall include, but is not limited to, elevations at interfaces of existing and proposed pavement, drainage features, structures, and grading limits. Design-Builder is responsible for all surveys, including but not limited to, those relating to the Work, and Utilities including locating Project ROW established by the Department necessary to perform the Work. The Department will provide survey control. Existing survey information is contained in the RIDs.

English units shall be used in this Project.

3.20.3 Geotechnical

The existing geotechnical data are contained in the RIDs. Design-Builder shall conduct additional geotechnical investigations, analyses, design, and construction in accordance with Section 13 (*Geotechnical*) and the Project Standards.

3.20.4 Computer-Aided Drafting and Design Standards

Computer-Aided Drafting and Design (CADD) formatting for Design Documents, Released-for-Construction Design, working drawings, and Record Drawings shall conform to the Department's CADD drafting standards and CADD design standards.

3.20.5 Traffic

Existing traffic count data are contained in the RIDs. Design-Builder shall conduct any additional traffic counts, investigations, analyses, and Design Work necessary to fulfill the requirements of Section 11 (*Traffic*) and Section 12 (*Maintenance of Traffic*).

3.21 Software

3.21.1 Acceptable Project Software

Design-Builder shall acquire, use, and maintain the software as specified in this Section 3.21.1 and any software programs described in these Technical Provisions for Work:

1. Version – Use the current version of the specified software in effect as of the Proposal Due Date, unless otherwise called for in this section.
2. Update – Update software programs throughout the Work if mutually agreed upon with the Department. The Department will similarly update its software.
3. File Server – Store all data files for the applications included in this Section 3 on a file server and have them available to the Department through a mutually agreed-upon file server.

Design-Builder shall use the software programs listed below and any software programs described in these Technical Provisions for Work. In the event Design-Builder proposes to use any software other than that listed, Design-Builder shall submit the proposed software along with verification data for the Department's review and concurrence.

3.21.1.1 Office

1. Microsoft Office Suite (PowerPoint, Publisher, Word, Excel)
2. Primavera Engineering and Construction or Primavera Contractor (for CPM scheduling)

3.21.1.2 Public Involvement

1. Adobe (Photoshop, Illustrator, Acrobat)
2. CommentSense (via the website)

3.21.1.3 Roadway Design

1. CADD: MicroStation V8i and InRoads V8i Select Series (by Bentley) or newer version. Use the same version the Department is using on the Proposal Due Date, as listed at:
2. http://www.nevadadot.com/About_NDOT/NDOT_Divisions/Engineering/Design/CADD_Software_Standards.aspxEvaluation of turning movements: Autoturn latest version

3.21.1.4 Drainage Design

Acceptable drainage design software programs are provided in the *NDOT Drainage Manual* (latest edition) and the Project Standards.

3.21.1.5 Pavement Design

DARWin (AASHTOWare). Design-Builder may use an alternate software; however, the results shall be checked using DARWin and the results shall be submitted to the Department from DARWin software as part of Design Documents for a Design Review.

3.21.1.6 Geotechnical Design

Acceptable geotechnical project design software programs are provided in Chapter 11 of the NDOT *Geotechnical Policies and Procedures Manual* (latest edition) and the Project Standards.

3.21.1.7 Structural Design

Acceptable structural design software programs are provided in Chapter 8 of the NDOT *Structures Manual* (latest edition), the Project Standards, and the following supplements:

- CSiBridge (available from Computers and Structures, Inc.)
- VBridge (available from Viathor, Inc.)
- VBent (available from Viathor, Inc.)

3.21.1.8 Lighting

Lighting analysis is to be performed using AGi32 Version 14.3.2 multi-purpose lighting design tool software provided by Lighting Analysts, Inc. AGi32 is capable of a number of lighting-specific computations aside from the basic incident illuminance (fc/lux) on any real or imaginary surface. Detailed information about the program can be found at www.agi32.com.

3.21.1.9 Traffic

1. Traffic signal capacity, cycle length, split timing, and level of service: Synchro/Simtraffic Version 8 (Trafficware).
2. Freeway capacity and level of service: HCS 2010 version 6.50.
3. Simulation for freeway and corridor operations: TSIS/CORSIM version 6.3 (McTrans).
4. Sign panel design: SignCAD latest version.

This page intentionally left blank.

4 CONSTRUCTION QUALITY ASSURANCE, QUALITY CONTROL, AND OVERSIGHT

4.1 Design-Builder Construction Responsibilities

Construction Work shall be performed in accordance with the requirements of the Contract Documents, Good Industry Practice, Governmental Approvals, Government Rules, Final Design Documents, Construction Documents, and the approved PMP and components thereof.

As part of the overall ISO 9001:2008-compliant QMS, and as a component of the PMP, Design-Builder shall submit a CQMP for the Construction Work in accordance with Attachment 02-3 (*Construction Quality Management Plan*). Design-Builder, through the CQMP, shall have the primary responsibility for the quality of the Work, including all Work and products of its Subcontractors, fabricators, Suppliers, and vendors, both onsite and offsite. The Department, in its oversight role, will conduct acceptance inspections, audits, sampling, and testing as required.

The CQMP shall be capable of ensuring that procurement, shipping, handling, fabrication, installation, cleaning, inspection, construction, testing, storage, examination, repair, maintenance, and required modifications of all materials, equipment, and elements of the Work comply with the requirements of the Contract Documents.

4.1.1 Design-Builder Construction QC and QA Procedures

Design-Builder shall provide a construction quality organization as described in Section 2.1 (*General Requirements*) and Section 2.2.1.2 (*Quality Organization*). Design-Builder's construction quality organization shall be defined in the CQMP, including the positions and staffing levels described in Section 4.5 (*Design-Builder's Construction Quality Management Organization*). All construction processes, procedures, and workmanship shall be inspected by Design-Builder's construction QC inspectors and testers. Design-Builder's QA sampling and testing organization shall independently verify the reliability of the results of QC sampling and testing.

The construction QC and QA inspections, material sampling, and testing shall include the requirements, observations, measurements, and documentation specified in Design-Builder's CQMP and the Inspection and Testing Plan described in Section 4.2.2 (*Inspection and Testing Plan*).

All construction activities must be inspected by Design-Builder's quality organizations to the frequencies established in the Inspection and Testing Plan and all construction activities must be accepted by the Department. Design-Builder's inspection documentation shall include a description of construction activity and location. All inspection observations, measurements, results, Nonconforming Work, and corrective actions shall be documented in a format acceptable to the Department.

4.2 Design-Builder Inspection and Testing of Materials

4.2.1 General

All materials used in the Work are subject to inspection, sampling, and testing, and Design-Builder shall establish and maintain documented procedures for inspection and testing activities to verify that the specified requirements for the Project are met in accordance with the Project Standards.

4.2.2 Inspection and Testing Plan

As a component of the CQMP, Design-Builder shall submit an Inspection and Testing Plan that defines the details of QC and QA testing, inspection, and sampling required for the Work conducted by Design-Builder and all DB-Related Entities. The purpose of the Inspection and Testing Plan is to assemble in a single document all requirements for inspection and testing, whether it is QC and QA conducted by Design-Builder, DB-Related Entities, or inspection and acceptance testing conducted by the Department.

The Inspection and Testing Plan shall address product specifications, acceptance criteria, inspection, testing methodology, methods of product control, documentation, approvals, and the distribution of results. The Inspection and Testing Plan shall at a minimum address the requirement of Section 5 of the NDOT *Construction Manual*.

Design-Builder shall establish, document, and maintain procedures for all inspection and testing activities required by the Work, including those of DB-Related Entities.

The Inspection and Testing Plan shall follow the specifications and requirements of the Contract Documents and Good Industry Practice to define the inspection and testing activities for the Work. QC and QA inspection and testing shall be performed in accordance with Design-Builder's written procedures, the correct test procedures established by the industry (for proprietary processes), or the standards of the applicable Governmental Entity. The minimum construction QC inspections, material sampling, and testing shall comply with the requirements, observations, measurements, and documentation specified in Table 5.1 of the NDOT *Construction Manual*.

4.2.3 Witness Points and Hold Points

As a component of the CQMP and the Inspection and Testing Plan, Design-Builder shall establish witness points and hold points at defined stages of the Work for both QA and QC inspection and testing activities as applicable to the Work.

Design-Builder shall provide a minimum of 24 hours' notice to the responsible party (or parties) before the occurrence of witness points or hold points, or as specified by the Inspection and Testing Plan.

Failure to notify the Department of a witness point or hold point within the required timeframe, or failure to provide access to the location of the Work or process, may result in issuance of a Nonconformance Report by the Department.

Design-Builder's Quality Manager, CQM and Construction Manager shall meet regularly (but no less than biweekly) with the Department to review the status of QC and QA documentation and procedures, including, but not limited to, scheduling witness points and hold points, pre-activity meetings for new or complex operations, material certifications, daily quality inspection records,

material quality testing results, survey results associated with quality, permits, and material placement quality records.

By noon each Friday, Design-Builder shall provide the Department, in electronic format, a daily schedule of all planned QC and QA activities for the coming week. The schedule shall include a description of the Work with details of the operation such as scope, timing, location, and testing and inspections to be conducted.

For clarity, witness points and hold points are defined as follows:

- Witness point: A point in time used to identify specific tests, inspections, or processes to be witnessed by the responsible party (or parties) as specified in the Inspection and Testing Plan and/or utility agreements. These parties may be, but are not limited to, the Department, and persons authorized by the Department, Designer, or Design-Builder. Witness points are used to secure an opportunity for inspection or observation at a specific stage of the process or Work and require Design-Builder to advise the responsible party (or parties) of the time and location for inspection. Design-Builder is not required to stop work for witness points. The Department, and others authorized by the Department including third party contractors and the City of Las Vegas have access to the Site and Project infrastructure to attend witness points as required.
- Hold point: A point in time used to identify specific tests, inspections, or processes to be witnessed by the responsible party (or parties) as specified in the Inspection and Testing Plan and/or utility agreements. These parties may be, but are not limited to, the Department and persons authorized by the Department, Designer, or Design-Builder. Hold points are used to secure an opportunity for testing, inspection, or observation at a specific stage of the process or Work and require Design-Builder to advise the responsible party (or parties) of the time and location of the hold point. The Work may not proceed beyond the hold point without the responsible party (or parties) in attendance to conduct the inspection, testing, or observations required by the Inspection and Testing Plan. The Department, and other persons authorized by the Department including third party contractors and the City of Las Vegas as determined by the Department have access to the Site and Project infrastructure to attend hold points as required. At a minimum, Design-Builder shall establish witness points and/or hold points for the following stages of construction:

  1. Environmental:

     - After the establishment of erosion and sediment control measures for defined earth disturbance area (EDA) and Wellhead Protection Area (WHPA)
     - At the end of each month to review weekly and post-storm inspections
     - After installation of required protection measures in the WHPA

  2. Embankments:

     a. After clearing, grubbing, and excavation to ensure suitability for subgrade placement

     b. Proof roll at top of the subgrade

c. On completion of the foundation of mechanically stabilized earth (MSE) walls, and again at the completion of wall panel placement

d. At the completion of an embankment or to establish the settlement monitoring baseline

e. Proof roll of base gravels before asphalt placement

3. Structures:

a. After the completion of pile-driving at each structure support, including pile-driving results and records

b. At the completion of excavation for drilled shaft foundations and before steel cage and concrete placement

c. At the completion of placement for footing reinforcement steel and before the concrete placement

d. At the completion of placement for abutment wall reinforcement and before concrete placement

e. At the completion of placement for bridge deck reinforcement and before concrete placement

f. During dry run after setting rails for self-propelled mechanical finishing machine (Bidwell) to check for required concrete cover over reinforcing and just before placing concrete overlays

g. After the completion of the first component to receive specified aesthetic wall treatment/form liner and before proceeding with the construction of subsequent components

4. Utilities:

a. After the completion of drainage and Utility Adjustments and before backfill

b. After the installation of direct-burial duct banks and before backfill operations

c. For concrete-encased duct banks, after the installation of conduits and before concrete placement

d. For all Utility lines intended to transport pressurized materials and lines intended to carry liquids, after the installation and before the completion of pressure testing

5. Paving and sidewalks:

a. Before the placement of each course above subgrade on permanent roadway components

b. Before the placement of each lift of asphalt or Portland cement concrete

6. Intelligent Transportation Systems (ITS)

a. In accordance with Section 19.2 *(Testing)*

7. Landscape and Aesthetics (L&A)
    a. After staking of sculptural/aesthetic elements and before placement of aesthetic elements
    b. For irrigation lines after installation and before pressure testing
    c. After staking for earth forming, rock/boulder placement, and before placement
    d. After embankment stabilization, toe of slope rounding and rain harvesting channels and before groundplane treatments and planting

4.2.4 Design-Builder Construction QC and QA Testing and Sampling

All QC and QA testing and inspection reports, field memos, and checklists produced by Design-Builder and DB-Related Entities shall be in an electronic format acceptable to the Department.

Design-Builder's QC and QA inspectors and testers shall be Nevada Alliance for Quality Transportation Construction (NAQTC)-qualified in accordance with Section 5-300 (Tester Qualification Program) of the NDOT *Construction Manual,* or Western Alliance for Quality Transportation Construction (WAQTC*)*-qualified*,* and as applicable to an industry-recognized standard to the specific Work. For additional information refer to NAQTC or WAQTC website at www.naqtc.unr.edu or www.waqtc.org. Design-Builder's QC and QA inspectors performing field testing of concrete shall be certified as an American Concrete Institute (ACI) concrete field testing technician (Grade I).

Design-Builder shall maintain a list of inspector and tester qualifications and certifications as a quality record. Inspectors and testers shall hold current qualifications/certifications before working on the Project. Reports of each test or inspection shall be recorded on the form or checklist specified in the Inspection and Testing Plan for that test and in accordance with Section 2.2.3.4 (*Quality Books and Records*). Nonconformance with the Project Standards shall be dealt with through issuance of a Nonconformance Report by the appropriate Party.

Materials shall be sampled and tested by Design-Builder's QC organization, and test results shall be furnished to Design-Builder's Project Manager, Construction Manager and Lead Engineer, and reported to the CQM. Testing and inspection for production and process control by Design-Builder is a function of QC.

4.2.5 Collaborative Project Database

Design-Builder's EDMS as described in Section 1.6.2 (*Document Management*) shall be sufficient to meet the documentation, material testing, and inspection requirements of the Inspection and Testing Plan and Design-Builder's QMS. The system shall be accessible and usable by both Design-Builder and the Department without interruption.

The EDMS shall include concurrent real-time access for the Department to all Design-Builder and DB-Related Entities' quality Books and Records and documentation such as, but not limited to, the following:

1. Latest revisions of Released-for-Construction drawings
2. All Design Documents associated with the Design Work, including Design Reviews

3. All quality inspection and testing records, including QA and QC inspections, checklists, test results, field memos, and instructions
4. Nonconformity and corrective/preventive action tracking records
5. All QMS documentation, including Quality Manual, QMP, and QSPs
6. Design change documentation from Design-Builder, Subcontractor(s), and Designer(s)
7. Temporary traffic control plans, including lane closure reports and detours
8. Work methods
9. Change documentation
10. Correspondence and instructions from Designers and other DB-Related Entities

4.2.6 Incoming Product Inspection and Testing

Design-Builder shall ensure that incoming products are not used or processed until they have been inspected or otherwise verified as conforming to specified requirements. Verification of conformance to the specified requirements shall be in accordance with the Inspection and Testing Plan and documented procedures.

The Inspection and Testing Plan shall detail processes for incoming product inspection that shall include, but not be limited to, the following:

1. Documentation review including material certifications as applicable
2. Physical inspection of materials and equipment
3. Identification of items in accordance with the purchase order and shipping list, tag number, or marking
4. Verification of quantity and size
5. Dimensional checks, when applicable
6. Verification of protective coatings, if applicable
7. Examination of item(s) for condition and shipping damage

4.2.7 In-Process Inspection and Testing

Design-Builder shall do the following:

1. Inspect and test the product as required by the Inspection and Testing Plan and documented procedures.
2. Hold product until the required inspection and tests have been completed or the necessary reports have been received and verified by the appropriate party or parties.

4.2.8 Final Inspection and Testing

Design-Builder shall jointly conduct all final inspection and testing with the Department and affected stakeholders in accordance with the requirements of the QMP, using documented procedures to provide evidence of the finished Project conforms to the requirements of the Contract Documents.

Design-Builder shall develop and submit for the Department's review the documented procedures to ensure that the final observation and testing, where applicable, have been completed and all failing tests have been corrected or mitigated.

Records of final inspections and tests are required to verify that compliance with the specified requirements has been achieved.

The Inspection and Testing Plan and documented procedures for final inspection and testing shall require that all specified inspections and tests, applicable quality audits, and required documentation, including those procedures specified either upon the receipt of product or in-process, have been carried out, and that the results meet the specified requirements.

4.2.9 Inspection and Testing Records

Design-Builder shall establish and maintain quality Books and Records that provide evidence the Work has been inspected and/or tested as required by the Contract Documents. The quality Books and Records shall show where the inspection or test was performed, to what WBS work element the record relates, and if the Work for all permanent infrastructure features of the Project conforms or does not conform with the Contract Documents. Nonconforming Work will be subject to the issuance of a Nonconformance Report and the QMS procedures for the control of Nonconforming Work as defined in Section 2.2.7 (*Control of Nonconforming Work*).

Inspection and test records for Work performed by Design-Builder or DB-Related Entities, the Department, or a third party, shall be provided to the Department for review within 1 day of the inspection or testing being performed. The quality Books and Records of the inspection or test shall be in an electronic format acceptable to the Department.

4.2.10 Control of Inspection, Measuring, and Testing Equipment

4.2.10.1 General

Design-Builder shall establish and maintain documented procedures to control, calibrate, and maintain inspection, measuring, and testing equipment, including test software, used by Design-Builder to demonstrate the conformance of product to the specified requirements. Inspection, measuring, and testing equipment shall be used in a manner that ensures that the measurement uncertainty is known and is consistent with the required measurement capability.

Design-Builder's QA organization shall establish, document, and maintain procedures for the control of inspection, measuring, and test equipment. It shall be Design-Builder's responsibility, through the Quality Manager, to assess the organization to ensure the required procedures exist and are implemented.

Design-Builder's QA organization shall be responsible for ensuring applicable requirements of this Section 4 are addressed, including the following:

1. Definition of the responsibility and authority for the inspection, measuring, and testing equipment
2. Procedures for selecting measurements, determining the accuracy and precision required, and obtaining equipment that meets those requirements
3. Disposition of nonconforming equipment
4. Procedures for the identification, maintenance, and storage of measuring equipment
5. Record-keeping
6. Calibration frequency
7. Calibration status, including indicators
8. Disposition of items checked with equipment found to be out of calibration
9. Traceability of primary and secondary calibration standards

4.2.10.2 Control Procedure

Responsibilities of Design-Builder's QA organization shall include the following:

1. Determine the measurements to be made and the accuracy required and select the appropriate inspection, measuring, and testing equipment that is capable of the necessary accuracy and precision.
2. Identify all inspection, measuring, and testing equipment that can affect product quality, and calibrate and adjust them at prescribed intervals, or before use, against certified equipment having a known valid relationship to internationally or nationally recognized standards. Where no such standards exist, document the basis used for calibration.
3. Develop a master calibration listing indicating the inspection and testing equipment that is used. The log shall include, as a minimum, the identification number, item description, and the required frequency of calibration and accuracy requirements.
4. Define the process employed for the calibration of inspection, measuring, and testing equipment, including the details of equipment type, the unique identification, the location, the frequency of checks, the check method, the approval criteria, and the action to be taken when results are unsatisfactory.
5. Identify inspection, measuring, and testing equipment with a suitable indicator or approved identification record to show the calibration status.
6. Maintain calibration records for inspection, measuring, and testing equipment.
7. Assess and document the validity of previous inspection and testing results when inspection, measuring, or testing equipment is found to be out of calibration.
8. Ensure that the environmental conditions are suitable for the calibrations, inspections, measurements, and tests being carried out.

9. Ensure that the handling, preservation, and storage of inspection, measuring, and testing equipment is such that the equipment's accuracy and fitness for use is maintained.

10. Safeguard inspection, measuring, and testing facilities, including both test hardware and test software, from adjustments that would invalidate the calibration setting.

4.2.11 Inspection and Testing Status

The inspection and testing status of products shall be tracked by Design-Builder to indicate conformance or nonconformance to the required inspection and/or test for acceptance as required by the Inspection and Testing Plan. The identification of inspection and test status shall be maintained, as defined in the CQMP and other applicable documented procedures throughout the production, installation, and servicing of the product to ensure that only products that have passed the required inspections and tests are used on the Project.

4.3 Department Acceptance Inspection and Testing

The Department will be responsible for the acceptance of all materials and workmanship incorporated into the Project. The Department's acceptance organization will perform acceptance sampling and testing, determine acceptance or rejection of the materials, and implement a tracking system to monitor nonconforming materials and disposition of nonconforming materials in accordance with the Contract.

4.3.1 Department Oversight

The Department will verify that Design-Builder's QMS and the Project Work are in compliance with the requirements of the Contract Documents and as specified in Table 5.7 of the Department's *Construction Manual*. The Department will periodically audit Design-Builder's QC and QA activities, including conducting verification sampling and testing. The audits, test results, and subsequent feedback to Design-Builder are intended to assess the adequacy of Design-Builder's QC and QA processes, including the frequency of inspection and testing.

The Department may utilize the EDMS to record quality acceptance activities or provide Design-Builder with the data in a different format. Design-Builder shall utilize the EDMS to record all material test quality records, and to respond to Department observations.

Design-Builder shall be required to report all Nonconforming Work using the EDMS and shall issue a Nonconformance Report to effect resolution of the nonconformance in accordance with the processes in Section 2.2.7 (*Control of Nonconforming Work*) and Section 2.2.8 (*Corrective and Preventive Action*).

The Department may perform sampling and testing of Design-Builder's QC samples at any time.

4.3.2 Department Independent Assurance

The Department may perform periodic Independent Assurance (IA) inspection, sampling and testing to assure that QC, QA and acceptance procedures are being performed in accordance with Design-Builder's CQMP and the Contract Documents. The concept of IA inspection, sampling and testing is to "test the tester" through evaluations of testing equipment and testing procedures.

Prior to construction, Department's IA inspector will verify equipment used for QC, QA and acceptance testing is properly calibrated and in good working condition. During construction, Department's IA inspector will verify the reliability of QC, QA and acceptance samplers and testers through the following activities:

1. Verifying samplers' and testers' current NAQTC, WAQTC or other appropriate qualifications;

2. Witnessing sampling and testing by QC, QA and acceptance samplers and testers; and/or,

3. Splitting material samples and comparing the test results of QC, QA and acceptance samplers and testers with Department's IA sampler and tester.

For split-sample tests, the IA inspector will not use the same test equipment used by the QC, QA or acceptance samplers and testers.

IA sampling and testing will not be used to verify compliance with the Contract Documents. However, IA inspectors may periodically inspect the Work to confirm the Work is being performed in accordance with the requirements of the Contract Documents.

4.4 Material Testing Process

Design-Builder's construction quality staff shall inspect, sample, test, and accept or reject materials in accordance with the approved CQMP and the approved Inspection and Testing Plan. Design-Builder's testing methods shall be in accordance with the Department's testing standards.

Materials determined by Design-Builder to be nonconforming shall be subject to the procedure for control of Nonconforming Work, and disputes between the Department's acceptance testing and Design-Builder's testing for acceptance may addressed by Section 19.2 of the Contract at the request of either the Department or Design-Builder.

Design-Builder's detailed procedures for material inspection and testing must comply with the Project Standards and the CQMP. QA and QC testing by DB-Related Entities shall not be used for acceptance testing and QA and QC testing conducted at the fabricators and suppliers shall be included in the monthly QMS report submitted to the Department for review.

Design-Builder shall conduct QC receiving inspections to ensure materials meet the requirements of the Contract Documents.

Design-Builder is responsible for all costs and delays for nonconforming materials.

All nonconforming test data shall be included in QA verification test data, unless material is rejected and not used by Design-Builder whereupon the test data representing the rejected material may be excluded.

4.5 Design-Builder's Construction Quality Management Organization

4.5.1 Construction Quality Manager

Design-Builder shall assign a CQM who is responsible for QA organization and processes, including but not limited to all QA inspections, material sampling, and testing. Design-Builder's CQM shall be responsible for the overall management and supervision of Design-Builder's construction quality programs, including QA. The CQM shall report directly to Design-Builder's Quality Manager. The CQM is a Key Personnel in accordance with Section 7.6 of the Contract.

Design-Builder's CQM, or designees, shall have the authority to make needed improvements to the quality of Work, including the suspension of the Work, if required.

4.5.2 Construction Manager

Design-Builder's Construction Manager shall be responsible for construction QC organization and processes, including but not limited to inspections, material sampling, and testing activities. Design-Builder's Construction Manager shall be responsible for coordinating the schedules of Design-Builder's construction QC inspectors and testers. The Construction Manager and QC organization including inspectors, laboratories, and testers, shall not be associated with the QA organization, who are under the supervision of the CQM. The Construction Manager shall report to the Project Manager, liaise with the CQM, and provide inspection and testing results to the CQM.

4.5.3 Quality Staffing Levels

Design-Builder's quality staffing levels shall meet the requirements and reflect the complexity, needs, shifts, and composition of quality activities consistent with the Work and Design-Builder's QMS. Design-Builder's quality staffing levels shall be sufficient to meet the requirements of the Contract Documents for both the QC and QA organizations.

Design-Builder's CQMP shall identify the scope and methods of administrative and clerical support for the maintenance and management of quality Books and Records.

The CQMP shall include Design-Builder's quality staffing schedule and the schedule shall be updated throughout the term of the Contract to reflect an accurate forecasting of Design-Builder's quality staffing requirements.

4.5.4 Laboratories

Design-Builder shall retain laboratories for QC/QA testing at Design-Builder's sole expense. Laboratories shall be accredited by the American Association of State Highway Transportation Officials (AASHTO) Material Reference Laboratory (AMRL), the Concrete Cement Reference Laboratory (CCRL), the Prestressed Concrete Institute (PCI), the National Precast Concrete Association (NPCA), and/or the American Concrete Pipe Association (ACPA), as required by the Inspection and Testing Plan for the Work. If laboratory has PCI accreditation, NPCA or ACPA accreditation is not required.

Laboratories must obtain certification for all AASHTO and American Society of Testing and Materials (ASTM) test methods performed by the testing laboratory. Certification shall also be

obtained for AASHTO and ASTM test methods that are modified or referenced by the Department's test methods.

The laboratory shall have written policies and procedures to ensure that the portable and field laboratories performing testing activities on the project are capable of providing testing services in compliance with applicable test methods. The policies and procedures shall address the inspection and calibration of testing equipment, as well as a correlation testing program between the accredited laboratory and portable or satellite facilities.

The Department may audit Design-Builder's testing equipment for compliance with the manufacturer's requirements and specific requirements of the Contract Documents, and to review Design-Builder's testing procedures and techniques.

The Department (at no cost to the Department) may audit Design-Builder's testing laboratories as required to observe the storage and handling of samples, the condition and calibration records of testing and sampling equipment, test methods, and personnel qualifications, as well as how test results are documented and communicated and as otherwise required by the Department.

The Department retains the right to inspect and audit the facilities and equipment of DB-Related Entities as applicable to the Work.

4.6 Design-Builder Scheduling and Notice to the Department

By noon each Friday, Design-Builder shall provide the Department a written summary of planned Construction Work activities, including fabrication scheduled for the following 2 weeks. Design-Builder shall also discuss this information at the weekly coordination meeting to allow timely coordination of inspection activities. For activities such as fabrication occurring beyond 100 miles of the Project, Design-Builder shall give the Department at least 21 days' notice of planned Work.

4.7 Documentation

During performance of the Work, Design-Builder shall collect, preserve, and submit to the Department the following types of data in electronic format acceptable to the Department:

- Daily inspection reports
- Record Drawings in a format acceptable to the Department
- Databases such as spreadsheets, standard database software, and computation books
- Material receiving reports, material certifications
- Photographs
- Field design changes and Designer instructions

Daily manpower and equipment reports for Design-Builder and each Subcontractor for Construction Work activities shall be prepared and maintained by Design-Builder using the standard Department forms or other forms with a format acceptable to the Department.

A daily log for Construction Work activities shall be maintained by Design-Builder's Project Manager or designee(s) in which all significant occurrences on the Project shall be recorded daily in a narrative form, including unusual weather; asserted occurrences, events, and conditions causing or threatening to cause any significant delay or disruption or interference with the progress of any of the Work; injuries to person or property; and a list of each activity depicted on

the current monthly plan update that is being actively prosecuted. Also, in the Project area, traffic accidents and lane closures in effect at the time of the accident shall be noted.

Utility-related data shall be maintained separately for each Utility facility.

Hazardous Materials Management data shall be maintained separately for each site.

Design-Builder's quality Books and Records shall document all of Design-Builder's QMS operations, inspections, activities, and tests performed, including those performed by the subcontractors, service providers, and suppliers. Design-Builder shall use electronic forms where possible and may use forms provided by the Department or use alternate forms after acceptance by the Department.

Such records shall include delays encountered, Nonconforming Work, or Released-for-Construction designs and the corrective or preventive actions taken.

Design-Builder shall complete and submit appropriate documentation at the following times and frequencies:

1. Monthly QMS report as required by Section 2.2.3.5 (*Quality Management System Reports*)

2. Weekly – Design-Builder shall maintain and submit records that contain factual evidence that required activities or tests have been performed, including the following:

    a. Type, number, and results of QA/QC activities, including reviews, inspections, tests, audits, monitoring of Work performance, and materials analysis

    b. Closely related data, such as the qualifications of personnel, procedures, and equipment used

    c. The identity of Design-Builder's QA/QC inspector or data recorder, the type of test or observation employed, the results and the acceptability of the Work, and action taken in connection with any deficiencies noted

4.8 Material Certifications

Within 30 days after NTP2 and to the extent information is known, Design-Builder shall provide the Department the sources of supply and item material types to be used in the Work. For materials not initially identified, or changes to the initial source provided, the source of supply shall be provided within 10 days of Released-for-Construction Design Review.

Design-Builder shall use the Department's list of qualified manufactures, producers, and fabricators for the specified materials as set forth in Section 1.2.4 (*Control of Materials*). Alternatives proposed by Design-Builder must be submitted to the Department as set forth in Section 1.2.4 (*Control of Materials*).

When Design-Builder purchases materials from suppliers shown on the Department's QPL as set forth in Section 1.2.4 (*Control of Materials*), Design-Builder shall be provided a materials certification, or a certificate of delivery, certificate of analysis, or certificate of compliance, as required, from the supplier for those materials and their source.

Documentary evidence of compliance shall be in accordance with Section 1.6.2 (*Document Management*) and shall be sufficient to identify that the specific requirements of the Contract Documents, such as Construction Documents, Project Standards, and applicable Government Rules, are fulfilled by the purchased materials and equipment.

The substitution of specified materials shall not occur without prior approval by Design-Builder's Design Manager, and failure to acquire prior substitution approval shall result in the assignment of a Nonconformance Report.

The effectiveness of the QC by Design-Builder's own forces and Subcontractors shall be assessed by Design-Builder's CQCM at intervals consistent with the importance, complexity, and quantity of the product or services. The Department reserves the right to audit and review these documents at any time.

Before Final Acceptance of the Project, Design-Builder shall submit a certificate of compliance signed by Design-Builder's Project Manager, Design Manager, and Quality Manager stating that all materials incorporated into the Project conform to the requirements of the Contract Documents.

4.9 Construction QA and QC for Final Acceptance

The Department shall determine when Design-Builder achieves Final Acceptance pursuant to Section 20.3 of the Contract. Design-Builder shall complete all Work and provide all documents, certifications, and other information in accordance with the requirements of the Contract.

5 LANDSCAPE AND AESTHETICS

5.1 General

Design-Builder shall perform the L&A Work associated with the infrastructure improvements as categorized in Section 1.1 (*Project Categories and Limits*), providing for a high-quality, aesthetic, durable, and maintainable facility that is visually pleasing to the public, maintains stakeholders trust, and upholds the Department's integrity. The L&A Work shall be performed in accordance with the requirements of the Contract Documents, including Section 2.1.2 of the Contract, Good Industry Practice, Governmental Approvals, Government Rules, and the approved PMP and components thereof. Design-Builder's landscape architecture team shall have a working knowledge of the native vegetation of the Mojave Desert region, rainwater harvesting applications, and the integration of artistic sculptural elements. Design-Builder shall appoint leading personnel to perform L&A Work with the qualifications as described in the subsections of Section 1.6.4 (*Additional Leading Personnel Qualifications*) applicable to the L&A Work. Design-Builder shall use a collaborative, multidisciplinary approach to develop Design Documents for the L&A Work.

5.2 Standards and References

The standards and references for the design and construction of the L&A Work are listed in Section 26 (Standards and References). The design and construction of the L&A Work shall meet the requirements of Attachment 05-1 (Landscape and Aesthetics Requirements). Guidance for the *CLV NEON Art Project dated 12-10-14* is included in the RIDS.

5.3 Design Requirements

5.3.1 Preliminary Landscape and Aesthetics Plan

Design-Builder shall have prepared and submitted a Preliminary L&A Plan as part of its Proposal. Design-Builder shall prepare and submit a Revised Preliminary L&A Plan with the PMP. Design-Builder shall submit the Revised Preliminary L&A Plan for approval by the Department, in its good faith discretion, in accordance with the procedures described in Section 3.2 of the Contract. The Preliminary L&A Plan and Revised Preliminary L&A Plan shall include, but not be limited to, the following narratives and plans:

1. Design-Builder's narrative of the Project theme, context, and design process completed to date.

2. Design-Builder's narrative and plans that outline the opportunities and constraints in the design and construction of L&A theme(s) for all permanent infrastructure features of the Project.

3. Design-Builder's narrative shall describe the application of the L&A theme elements and how the landscape and aesthetic treatments contribute to the visual impression of the corridor, and establish a uniformity and continuity of color, style, and textures along the corridor. The narrative shall include description of the adjacent natural and manmade features context; detailed descriptions of selected plant palette; descriptions of hardscape material selection, color, size and scale; and sculptural/artistic features. The design shall be articulated for the following items: finished grading used to create interesting landforms,

soft and hardscape elements, passive rainwater harvesting, irrigation system, and design integration with drainage and structures.

4. Design-Builder shall provide a specific narrative that describes the cross streets and the character and context of how they relate to and are seen along the corridor.

5. Design-Builder shall provide an overarching graphic image of the L&A design of the Project. The graphic image shall represent the specific areas to receive soft and hard aesthetic treatments, sculptural elements, and grading of landforms.

6. Design-Builder shall graphically detail the requirements and application of themes for the aesthetics on all structures, including but not limited to bridges, bridge rails, retaining walls, sound walls, barriers, aesthetic lighting, fencing, sign bridges, and sculptural/artistic features within the Project.

7. Design-Builder shall provide Plans that show all areas to receive L&A treatments and a roll plot at a minimum scale of 1 inch = 200 feet for presentation to the Department.

8. Design-Builder L&A Plans shall include a narrative describing the establishment and maintenance activities for new and existing L&A areas.

5.3.2 Mitigation Planting Plan

Design-Builder shall provide an overview, photographic record, and existing conditions location Plans of all existing L&A elements, including but not limited to, plants, sculptures, appliques, ground plane materials, and aesthetic painting, within the Site. Documentation shall be referenced during Construction Work and Warranty Period. The existing L&A elements to remain shall be preserved and protected with fencing (see Section 5.3.3 [*Landscape Design Documents*] and Section 5.4.1 [*General*]).

Design-Builder's Arborist shall provide Design-Builder with the expertise to ensure all plant materials thrive throughout construction and through the Plant Establishment Period set forth in Section 10.2 *of the Contract.* Design-Builder's Arborist shall document the existing plant species, location, and size within the Site. The documentation shall provide a table of existing plant material to remain, existing plant material to be removed, and required mitigation of removed plant material. Opportunities for plant salvage, including those plants protected by law, shall be considered and addressed within the Department's Project Infrastructure.

Design-Builder's Mitigation Planting Plan shall include the required mitigation plant numbers, species, and proposed locations. All trees and plant material that are alive regardless of condition, removed for Project Construction Work or damaged during Construction Work shall be mitigated. The mitigation plants shall be in addition to the otherwise required tree, shrub and groundcover landscape planting. The Mitigation Planting Plan must be approved by the Department prior to the issuance of NTP2 and may be included within the L&A Plans with the additional required mitigation plants clearly indicated. The Mitigation Planting Plan shall include a table to document the required mitigation plants based on a ratio of 2 caliper inches (measured at 4.5 feet above ground) of replacement material for each caliper inch (measured at 4.5 feet above ground) of any tree 4.0-inch diameter or greater removed and any shrub and living groundcover replaced on a ratio of two plants for every plant removed. Plant mitigation requirement ratios for existing plant material shown to remain, and the plant material is damaged during construction shall have a 3:1 ratio applied. "Damaged during construction" includes those plants not shown on the original

mitigation plan that have damage greater than 25 percent of the plant, have been removed, or have died prior to Final Acceptance.

5.3.3 Landscape Design Documents

Design-Builder shall prepare the L&A Plans in conformance with Attachment 05-1 (*Landscape and Aesthetics Requirements*), and the approved Revised Preliminary L&A Plan.

Design-Builder shall coordinate the design of L&A Work with all other disciplines of Work. All Design Units submitted shall address the L&A Work and shall include the location of temporary preservation fencing of existing L&A elements to remain on early construction discipline plans.

The Project's L&A Plans shall reflect necessary base information conditions (for example, depressed sections, elevated sections, at-grade roadway, bridges, sound or retaining walls, and other structural elements) that might affect the corridor aesthetics. Composite drawings of all Utilities and easements that would conflict with L&A Work proposed for the Project shall be included in the L&A Plans.

The Project's L&A Plans shall include plans, elevations, sections, perspectives, isometric drawings, etc., as necessary to fully convey the proposed aesthetic treatments, including color and texture applications; drawings, tables, schedules, and matrices that show where specific aesthetic site elements/treatments are located; and plant palette schedules, size, number, locations of trees, shrub beds, accent beds, planting types, revegetation areas, and specific planting dates. Design-Builder's L&A Work shall include an underground permanent irrigation system to maintain the plant material.

Design-Builder shall indicate on the Design Review Plan and Schedule provided pursuant to Section 3 (*Design Quality Management*), the anticipated meeting dates for L&A review and comment resolution meetings. Any updates to the Design Review Submittals and Schedules shall be routed to the Department's Landscape Architect supervisor.

5.3.4 Color for Corridor Treatments

Design-Builder shall use the base and accent colors required in Attachment 05-1 (*Landscape and Aesthetics Requirements*). The Project base color shall be the color applied to the corridor elements and shall cover the hard surface elements. A minimum of three accent colors shall be applied in a consistent treatment throughout Project. Accent colors shall be applied to highlight architectural features or thematic corridor elements.

Color application shall include but not be limited to the following areas:

- All visible surfaces shall be painted or stained. This includes, but is not limited to, the barriers, barrier rails, bridge rails (both inside and outside), monuments, bridge super- and substructures, bridge columns, pier caps, girders (refer to Section 14 [*Structures*]) abutments and wing walls; sound walls, retaining walls, and slope paving. Retaining walls, sound walls, abutments, and wing walls shall be painted or stained to a depth of 1 foot below finished grade.
- All bridge girders shall be painted inside and out with the base color.
- Elements of existing bridges, barrier rails (both inside and outside), monuments, bridge super- and substructures, bridge rail, bridge columns, pier caps, girders, abutments and

wing walls; sound walls, retaining walls, and slope paving, that remain within the Site following Construction Work shall be painted to match the Project theme base and accent colors to provide a consistent treatment within the corridor.

- Design-Builder shall prevent any paint overspray on existing L&A areas, roads, bridges, structures, signage, or city or private property.

Existing bridges and structures in the I-15/US 95 interchange shall be painted or stained to the extent shown in Attachment 05-1 (*Landscape and Aesthetics Requirements*), including, but not limited to, barrier rails (both inside and outside), monuments, bridge super- and substructures, bridge rail, bridge columns, girders, sound walls, retaining walls, and slope paving.

Desert Varnish specifically formulated for galvanized metal shall be applied to galvanized steel surfaces including fencing, fabric, posts, gates, pedestrian light poles, signal arms and poles, overhead sign structures, gantry bridges and poles, guardrails and control of access fencing. Design-Builder shall provide a mockup of the color treatments for each surface to be treated for Department approval. The approved mockups shall be maintained on-site throughout Construction to ensure color consistency.

Existing galvanized surfaces to remain within the Department's Project Infrastructure shall be treated with Desert Varnish.

Desert Varnish formulated for concrete shall be applied to all existing or new concrete open channels, concrete drainage swales or exposed surfaces of open storm drain confluences structures.

5.3.5 Bridge Aesthetics

Design-Builder shall design aesthetic bridge elements and treatments to represent corridor themes, including artistic motifs, sculptural additions, architectural concrete textures, surface finishes, and painting and/or staining.

Bridge elements that shall be included in the aesthetic treatments include the bridge super- and substructures, columns, bridge rail, barriers, pedestrian fencing, retaining walls, aesthetic lighting, and slope paving.

In its design of the new bridges, Design-Builder shall strive for consistency within the Project corridor. Column types shall be developed to create a family of columns that relate to one another in the new design and the existing corridor in both form and appearance. A group of adjacent bridges shall have a single column shape, except for any straddle bents that may be required by roadway geometry.

Girders on an individual bridge shall have a consistent depth along the bridge to the greatest extent possible. Where this is not feasible due to design and/or construction constraints, Design-Builder shall incorporate smooth transition sections to allow the girder depth to visually flow from deeper to shallower sections.

All exposed drain pipes from structures used on the Project shall be painted to match adjacent bridge elements. To the greatest extent possible, they shall be positioned where least viewed from the roadway.

5.3.6 Wall Aesthetics

Design-Builder shall design aesthetic treatments to the vertical surfaces of all built walls, including retaining walls, and sound walls. Freestanding walls, sound walls, and walls viewed from more than one side shall have treatment to both faces of the wall.

Design-Builder shall design aesthetic wall treatments and elements to include artistic motifs, sculptural additions, architectural concrete textures, surface finishes, and painting and/or staining. Design of the wall finishes shall strive for consistency within the Project corridor. Artistic panels shall be designed to follow the corridor theme and to create a family of images that relate to one another and the existing corridor in both form and appearance. The detail and scale of wall panels, patterns, colors, and appliqués shall be directly related to the visual context of the wall as seen by viewers, considering the speed and view distance.

The minimum aesthetic treatments shall include vertical rustication texture and color for the walls. The vertical rustication shall not exceed one 7-inch flat plane width per 4-foot-wide panel. Texture depth for vertical rustication shall be a minimum of 2".

The aesthetic treatment shall be applied in a ratio of 30 percent (1-inch depth) to 70 percent (2-inch depth) per panel. The minimum concrete texture depth for walls is 1 inch and the maximum is 2 inches.

Aesthetic treatment shall support the theme and concepts for the Project corridor. Refer to Attachment 05-1 (*Landscape and Aesthetics Requirements*) for additional requirements for artistic panels and appliqués.

5.3.7 Grading and Slope Paving Aesthetics

Finish grading for landscape planting and aesthetic treatment shall be seamlessly integrated by combining contour free-form grading, slope rounding, and rainwater harvesting with requirements of erosion control and channel/drainage swale grading.

Slope paving shall be used only when Design-Builder demonstrates that other alternative treatments are not viable for stabilizing slopes. Slope paving shall be treated with both texture and color (refer to Attachment 05-1 [*Landscape and Aesthetics Requirements*]).

Existing slope paving that is changed, removed, replaced, refreshed, or altered within the Site during Construction Work for the Project shall be treated as new slope paving and surrounding slope paving at that location shall be either replaced to match or appropriately stained or painted to match the color and/or treatments identified in Attachment 05-1 (*Landscape and Aesthetics Requirements*).

5.3.8 Sidewalks and Medians

Where medians and islands are 6 feet wide or narrower, hardscape treatments of colored, stamped, or artistic paving shall be used. Design-Builder may propose alternative treatments in the Revised Preliminary L&A Plan. Medians on Local Agency Project Infrastructure which are greater than 6 feet wide shall follow the City of Las Vegas Standards with the exception of no palm trees.

5.3.9 Groundplane

Design-Builder shall design aesthetic treatments to the groundplane surfaces throughout the Project. No ground shall be left untreated. Groundplane treatment includes vegetation, rock mulches, boulders, and colored glass. Drainage areas, swales, and ditches shall have an aesthetic ground treatment compatible in color and design with the landscape groundplane treatment.

Design-Builder shall design aesthetic groundplane treatments and elements to include artistic motifs, sculptural additions, curvilinear designs, or patterning to support the theme and concepts for the Project corridor. The use of inorganic mulches and crushed rock, herein defined as decorative rock, is encouraged. Refer to Attachment 05-1 (*Landscape and Aesthetics Requirements*) for additional requirements of groundplane treatments.

Design of the groundplane finishes shall strive for consistency within the Project corridor. Artistic designs shall create a family of images that relate to one another and the existing corridor in both form and appearance. The detail of patterns, colors, and sculptural elements shall be directly related to the visual context of the groundplane as seen by viewers, taking into consideration scale, speed, and distance.

All landscaped areas shall include groundplane treatments to address permanent erosion control and aesthetics. The design of the groundplane treatments shall be able to support the design theme with and without plant material. The design of the groundplane shall employ contour grading, slope rounding, and other design/construction methods to help emphasize the theme and concept of the Project. Design-Builder shall show the relationship and integration of L&A design in submittals of the drainage design. The sole use of tackifier, dust palliative, or soil stabilizer as a groundplane treatment is not acceptable. Use of “permanent” erosion control blankets as a sole treatment is not acceptable.

Design-Builder shall treat the existing untreated groundplane areas throughout the Spaghetti Bowl (I-15 and US 95/I515 Interchange) that have bare soil with decorative rock mulch to provide an aesthetic appearance and prevent erosion. The treatment shall complement the adjacent corridor Meadows Redux theme while still integrating with the overall existing aesthetic theme of the Spaghetti Bowl. Refer to Attachment 05-1 (*Landscape and Aesthetics Requirements*) for additional requirements of groundplane treatments. Design-Builder shall complete the treatment of these areas within 90 days of NTP 2.

Design-Builder shall refer to *CLV NEON Art Project* dated 12-10-14 included in the RIDS for guidance in the transition of groundplane treatments between the Meadows Redux and NEON Dunes concepts to form a complementary and cohesive aesthetic.

5.3.10 Vegetation

Design-Builder shall design vegetative treatments (trees, shrubs, and other living plant material) throughout the corridor as indicated in the recommended plant palette Attachment 05-1 (*Landscape and Aesthetics Requirements*). The plant palette may be amended with the approval of the Department’s Landscape Architect supervisor during the L&A Preliminary Plan review and comment period. Attachment 05-1 (*Landscape and Aesthetics Requirements*) includes requirements for minimum acceptable planting densities by plant type (tree, shrub, groundcover, size, and spacing. Design-Builder shall not plant invasive species.

All plantings shall be planted in groups to achieve the best visual impact. Use and locations of these landscape plant materials shall be designed with consideration of their height and enhancement potential on views from vehicles/pedestrians, required sight distances, soil and slope characteristics, maintenance requirements, and compatibility with the surrounding environment.

Plant material alone will not achieve the design themes and concepts; rather, it will be secondary and supplemented with sculptural elements to achieve aesthetic themes. Plant materials selected shall be drought-tolerant, native, and/or adapted species that have a proven track record of success in the area.

Design-Builder shall plant all vegetation with trunk or stems that may grow larger than 4 inches in diameter outside of the clear zone. Plant material and aesthetic treatment placement shall adhere to the current AASHTO standard for clear zones.

Design-Builder shall refer to *CLV NEON Art Project dated 12-10-14* included in the RIDS for guidance in the transition of vegetation treatments between the Meadows Redux and NEON Dunes concepts to form a complementary and cohesive aesthetic.

5.3.11 Sculptural/Artistic Features

Design-Builder shall provide sculptural and artistic features, including standalone features and those related to other structures as shown in Attachment 05-1 (*Landscape and Aesthetics* Requirements). Sculptural and artistic features shall be coordinated with the appropriate design professional (structural, electrical, etc.) for appropriate stamping and sealing of the document.

Aesthetic treatments of light poles, mast arms, signals, sign bridges, and guardrail or any other galvanized finishes shall incorporate at a minimum desert varnish finish specifically formulated for galvanized metal (hereafter referred to as “Desert Varnish”).

Design-Builder shall refer to *CLV NEON Art Project dated 12-10-14* included in the RIDS for guidance in the Local Infrastructure sculptural and artistic features and coordinate sculpture and artistic features through the Department with the local agency, refer to Section 1.2.1 Local Infrastructure.

5.3.12 Fencing

Design-Builder shall provide thematic decorative fencing for pedestrian sidewalks. Decorative fencing shall be treated with an accent color or a complementary thematic finish. Decorative fencing on Local Infrastructure shall meet the requirements of the Local Agency.

“Control of access” fencing for the Department’s Project Infrastructure shall be a permanent galvanized welded wire fabric fence with Desert Varnish finish on all posts, gates, wires, and fabric. Control of access fence shall meet all FHWA control of access fencing requirements, including, but not limited to, height, posts, top and bottom wires, and brackets. Chain link fencing is not acceptable. See Section 5.4 (*Construction Requirements*) for preservation fencing.

5.3.13 Aesthetic Lighting

Design-Builder shall provide low-maintenance, vandal-resistant aesthetic lighting to accent sculptural/artistic features.

5.3.14 Irrigation

Design-Builder shall provide water for plant material. Design-Builder shall ensure plant establishment and long-term success of the plantings. Design-Builder shall use water-wise and water-efficient plant material and design passive water harvesting methods throughout the planting areas.

L&A planted areas with existing irrigation systems that are modified, replaced or extended shall include trace wires above the piping to enable future location.

Design-Builder shall pay for all irrigation water service and irrigation power service in the existing and future areas of the Local Agency Project Infrastructure, in accordance with Section 1.7 (*Responsibility for Utility Service Costs*) for the duration of the Plant Establishment Period after the City of Las Vegas' acceptance of said improvements, in a manner consistent with City of Las Vegas standards and practices. Water service meters for landscape irrigation to be owned, operated and maintained by the City of Las Vegas cannot be combined with the Department L&A irrigation water service. Water service meters must meet the requirements of the Utility. See Section 18.3.4 (*Additional Design Requirements*) for additional utility requirements.

1. Design-Builder shall be responsible for utility costs from the local water agency, electrical providers, and other necessary Utilities providers for the Department's Project Infrastructure as set forth in Section 1.7 (*Responsibility for Utility Service Costs)*.

2. Design-Builder shall ensure the existing irrigation systems remain compatible with the Department's master controller in operation by the Department at the end of Substantial Completion for the Department's Project. Project water service meters must meet the requirements of the Utility. See Section 18.3.4 (*Additional Design Requirements*) for additional utility requirements.

3. Design-Builder shall design and install sleeving under new and existing ramps for the Department's Project Infrastructure. Sleeves shall support any new or existing irrigation systems in the new or existing L&A Spaghetti Bowl areas. Design-Builder shall provide at a minimum, two 6-inch polyvinyl chloride (PVC) schedule 80 or schedule 40 steel sleeves (capped if not used) under all new ramps to infield areas for future use. Design-Builder shall demonstrate that all sleeves are easily locatable in the field after installation. All sleeve locations shall also be shown on both the roadway and the irrigation as-built drawings.

5.3.15 Local Agency Project Infrastructure L&A Work

Design-Builder shall submit L&A Plans presenting the L&A Work in graphic form at each Design Review stage to the Department to demonstrate to the Department that Design-Builder is meeting the design requirements of Attachment 05-1 (*Landscape and Aesthetics Requirements*), *CLV NEON Art Project dated 12-10-14* included in the RIDS and the approved Revised Preliminary L&A Plan.

At any time during the Design Review process, the Department may release graphics to the public. This includes but is not limited to aesthetic treatment of sound walls, retaining walls and masonry fences along the border of the Scotch Eighties subdivision and the University of Nevada, Las Vegas (UNLV) campus.

Design-Builder shall construct masonry fences with a height of 8 feet and finished with painted stucco, cap and aesthetic treatments as indicated in Section 7.0 (*Local Agency Project Infrastructure*) in Attachment 05-1(*Landscape and Aesthetics Requirements*). Masonry fences shall be constructed of concrete masonry units founded on concrete footings in accordance with Southern Nevada Building Officials (SNBO) Regional Standard B-100.

Design-Builder shall construct masonry fences at the following locations:

- Along Loch Lomond Way between Glen Heather Way and Oakey Boulevard (approximate limits from “SA3” 753+00 to “SA3” 766+65)
- Along MLK Boulevard between Oakey Boulevard and the fire station (approximate limits from “MLK” 11+40 to “MLK” 20+85)
- Along MLK Boulevard from Richard Court to Ellis Avenue (approximate limits from “MLK” 27+00 to “MLK” 33+05)
- Along the MLK slip ramp to Charleston Avenue between Charleston Avenue and Hastings Avenue (approximate limits from “MLK-CH” 10+55 to “MLK-CH” 15+85)

L&A Work that will be Local Agency Project Infrastructure shall be designed and constructed to the City of Las Vegas *Downtown Centennial Standards* and in accordance with the requirements in Attachment 05-1 (*Landscape and Aesthetics Requirements*) and *CLV NEON Art Project dated 12-10-14* included in the RIDS.

Design-Builder shall maintain L&A treatments through a 2-year maintenance and establishment period after the Final Acceptance of the said improvements, in a manner consistent with City of Las Vegas standards and practices; see Section 10.2 of the Contract.

5.3.16 Deterrence of Vandalism and Unauthorized Use of Facilities

Design-Builder shall design all L&A Work to deter vandalism and to prevent unauthorized use for living spaces or for hiding and storing personal belongings. Where plantings are to be installed, Design-Builder shall use open-branched trees and shrubs that will maintain their shape and minimize trash and debris collection and will not attract unauthorized use. Design-Builder shall provide fencing with a locked gate for maintenance access where warranted to deter unauthorized access.

5.4 Construction Requirements

5.4.1 General

All landscape elements shall be installed in a timely manner in relation to the other Work to minimize bare earth. All existing L&A elements disturbed by Design-Builder shall be restored, replaced, or refreshed in a timely manner to better than pre-construction conditions including, but not limited to, walls, interchange infields, fencing, sculptures, earth art, landforms, rock surfaces, boulders, paint, and artistic elements.

Design-Builder shall provide temporary measures to stabilize soils before landscape installation in rough graded areas in accordance with the applicable Technical Provisions.

Design-Builder shall protect existing or new L&A elements including trees and vegetation to remain when construction is within 50 feet with preservation fence. Preservation fencing shall include a temporary 6-foot-high, high-visibility fence material on movable chain link fencing installed before working in these areas. The fence shall encircle groups of plant material outside the drip line.

Design-Builder shall coordinate L&A Work with other construction activities to avoid potential conflicts with underground facilities such as Utilities, ITS, and drainage facilities.

If a conflict arises during construction, Design-Builder shall be responsible for gaining the concurrence of the Department's Landscape Architect supervisor in any modification of the L&A Plans which concurrence shall not be unreasonably withheld so long as the L&A design intent is retained and a unified theme is created for the Project.

5.4.2 Materials

Design-Builder shall provide materials that meet or exceed the minimum requirements of this Section 5 and Attachment 05-1 (*Landscape and Aesthetics Requirements*) and in accordance with the relevant requirements of the Project Standards listed in Section 26 (*Standards and References*).

5.4.3 Soil Preparation

The soil in all areas to be landscaped shall be prepared before beginning planting. Design-Builder shall perform soil tests through the Project landscape areas, including native seed areas. All imported soil sources shall be tested before delivery onsite. Soil testing shall be performed for texture, particle size gradation, pH, and organic content. Soil tests shall indicate which amendments are necessary for the successful establishment of the plantings. Design-Builder shall implement the recommendation of the Arborist in determining the soil preparation and amendments necessary to warranty the health of the plant material.

5.4.4 Noxious Weed Control Plan

Design-Builder shall control noxious weed species within the Project. Control of noxious weeds shall be applied as required by the State of Nevada's applicable seed laws. Design-Builder shall prepare and submit a Noxious Weed Control Plan, including pre-emergent herbicide to prevent the establishment and spread of state-listed noxious weeds in accordance with NRS Title 49 (Agriculture) Chapter 555 (Control of Insects, Pests, and Noxious Weeds), to the Department for review and comment prior to NTP2, before the start of eradication or removal work and it shall be updated annually. If chemical controls are proposed, they shall be applied by a certified pesticide applicator. Design-Builder shall incorporate invasive-free mulches, topsoil and seed mixtures, and eradication strategies to eliminate known invasive species within the Site.

5.4.5 Herbicide

All areas to receive planting, other than native seeded areas, shall be treated with a pre-emergent herbicide before planting. The pre-emergent herbicide treatments shall not be detrimental to the intended replacement plantings. The application of herbicide shall follow the Department's standards and the manufacturer's recommendations. In addition, the application of the pre-emergent herbicide shall be in compliance with the Noxious Weed Control Plan.

Design-Builder shall treat any weed species with a post-emergent non-selective herbicide not less than 2 weeks before beginning soil preparation activities. Weed treatment shall follow the approved Noxious Weed Control Plan.

5.4.6 Planting

Design-Builder's Arborist shall provide an existing tree inventory, health reports, and mitigation recommendations for existing shrubs and trees to remain and those to be removed, as described in Section 5.3.2 (*Mitigation Planting Plan*).

Design-Builder's Arborist shall provide a quarterly plant material health recommendations report commencing 30 days after issuance of NTP2 and continuing through Final Acceptance. The Arborist shall advise and report on new planting soil amendment recommendations, planting preparation, and maintenance regimes. The Arborist will monitor the healthy viability of all plant material within the Site through visual observance, testing of soil properties, infestation recommendations, watering regimes, and fertilization.

Any tree within the boundary of the preservation fence that is removed, or a minimum of 25 percent of the canopy dies back, shall be replaced based on mitigation requirements in Section 5.3.2 (*Mitigation Planting Plan*).

Plant material disturbed by construction outside the Project ROW shall be restored to pre-existing aesthetic and vegetative conditions. Design-Builder shall not enter areas outside of the Project ROW without written permission of property owner.

5.4.7 Ground Cover Mulch

All landscape areas shall be mulched to reduce erosion, lessen weed germination and growth, and inhibit water loss from the soil see Attachment 05-1 (*Landscape and Aesthetics Requirements*).

5.5 Landscape Maintenance Considerations

Design-Builder shall design the landscape and aesthetic treatments to facilitate and minimize future maintenance. Plant materials shall be drought-tolerant, native, and native-adapted species that have a proven track record of success in the region.

Design-Builder shall maintain L&A Work for the Local Agency Project Infrastructure, within the Site through a 2-year maintenance and establishment period after the Final Acceptance of the said improvements, in a manner consistent with City of Las Vegas standards and as set forth in Section10.2 of the Contract.

Design-Builder shall maintain L&A Work for the Department's Project Infrastructure within the Site through a 2-year maintenance and Plant Establishment Period after the Department's Final Acceptance of the said improvements, and as set forth in Section10.2 of the Contract

Design-Builder shall provide safe access to all Project areas for maintenance personnel for maintenance activities, including, but not limited to:

1. Trash and debris removal

2. Surface finish maintenance (painting, patching, graffiti removal)

3. Plantings (pruning, fertilizing, insect and weed control, replacement)

4. Inspection, repair, and replacement of structural/artistic elements; irrigation water/electrical components; access to drainage structures; utility boxes; decorative lighting and groundplane.

5.6 Submittals

Each Design Review of an L&A Plan shall consist of Stage 1 Design, Stage 2 Design, and Released-for-Construction Design as described in Section 3.9 (*Design Reviews*).

Arborist quarterly reports shall be submitted to the Department, reports shall document Design-Builder's review and recommendations acted upon and agreed with the Arborist.

5.6.1 Stage 1 Design

In addition to meeting the requirements of Section 3.9.1 (*Stage 1 Design*), the Submittal for Stage 1 Design for L&A Work shall include the following:

1. Revised Preliminary L&A Plan – The revised Preliminary L&A Plan shall also include a memorandum to identify the lead designer and checker for each L&A structural/artistic element. The memorandum shall list and define design codes and specifications to be used, project-specific criteria, design criteria, material properties, design methodology, and seismic and structural design methodology.

2. L&A Plans (30-percent design) – This Submittal shall include a front sheet, plans, elevations, typical sections, details, general notes, and schedules. This submittal is required for all L&A elements.

3. Arborist tree inventory and mitigation report.

4. Mitigation Planting Plan – Existing plant material removed and proposed mitigation plant material location

5.6.2 Stage 2 Design

In addition to meeting the requirements of Section 3.9.2 (*Stage 2 Design*), the Submittal for L&A Work shall include the following:

1. L&A Plans (80 percent design) – This Submittal shall include any proposed revisions to the approved Revised Preliminary L&A Plan (if necessary) and L&A Plans which shall provide sufficient detail to verify that Design-Builder is adhering to the applicable Projects Standards for the Project. This submittal, as a minimum, will include the following sheets (as applicable):

    a. Front sheet

    b. General notes

    c. Location plans

    d. Detailed layout(s) & grading

e. Detail(s)

f. Plant plan(s), material quantity schedule(s) – includes mitigation plants

g. Corridor roll plot locating all L&A elements

5.6.3 Released-for-Construction Design

In addition to meeting the requirements of Section 3.9.3 (*Released-for-Construction Design*), submit the following:

1. Final corridor roll plot locating all L&A elements

5.6.4 Final Design

Refer to Section 3.9.4 (*Final Design*).

5.6.5 Working Drawings

Refer to Section 3.10 (*Working Drawings*).

5.6.6 Record Drawings

Refer to Section 3.11 (*Record Drawings*).

This page intentionally left blank.

6 PUBLIC INVOLVEMENT

6.1 General

The public involvement Work for the Project is to advance the Department's previous dialogue with residents, landowners, community groups, local officials, homeowners' associations, and other like groups to maintain the public and stakeholders' trust to uphold the Department's integrity. The public involvement Work for the Project shall be as described in this Section 6 (*Public Involvement*).

6.2 Standards and References

Design-Builder shall perform the public involvement Work in accordance with the applicable requirements of the Contract Documents, including Project Standards and this Section 6, Governmental Approvals, and applicable Government Rules.

6.3 Requirements

The Design-Builder's public involvement Work will begin at NTP1 and continue through Final Acceptance of the Project. Design-Builder shall support the Department in public involvement activities with individual land owners, business owners, local officials, and community groups, including public meetings and social media to keep the public informed regarding Design Work, Construction Work, and other Project activities. Design-Builder shall support the Department in addressing concerns the public may have and shall consider all reasonable suggestions from the public.

Documentation between the Department and Design-Builder shall be in the form of meeting minutes and correspondence, including emails. Design-Builder shall direct all requests it receives to the Department and shall assist in preparing responses.

The Department has adopted a logo for the Project. Use the Project logo and the Department's logo on all materials used to communicate with the public throughout the Project. Any project-specific logo developed for the Project shall be approved by the Department prior to its use. Do not use the Design-Builder's and Subcontractor's logos and/or names on any public communications materials.

6.3.1 Public Involvement Plan

This section outlines the requirements for the Public Involvement Plan (PIP) and defines the roles and responsibilities of this effort through the Final Acceptance of the Project in accordance with the Contract. As a minimum, include the following within the PIP:

- Internal communications and protocols
- Identification of Stakeholders and their concerns
- Key messages and commitments
- Methods of communication to be used with Stakeholder groups
- Plan for public information meetings

- Plan for complaint monitoring and resolution
- Project website communications plan
- Coordination plan for management and maintenance of traffic during construction
- Implementation schedule consistent with the Design-Builder's overall Project Schedule
- Emergency Plan, and Incident Management Plan that will anticipate potential emergencies and outline appropriate communications with emergency service providers, Project staff, and the Department

In addition, Design-Builder's PIP shall include a Community Outreach Plan describing how Design-Builder proposes to support the Department as it engages public involvement activities including outreach to communities, neighborhood organizations, historic preservation groups, and other stakeholders for the Project.

Design-Builder shall submit to the Department its PIP, which is a component of the PMP and addresses all public involvement tasks defined in this Section 6 and in the Contract Documents. See Attachment 01-3 (*Project Management Plan*) for the content and schedule for submittal. Design-Builder shall designate an on-staff Public Information Coordinator to be responsible for implementing the PIP and leading Design-Builder's public information tasks. The Public Information Coordinator shall be a Key Personnel.

6.3.2 Public Information Meetings

The Design-Builder will assist the Department in conducting various information meetings with the general public, adjacent neighborhood organizations, emergency responders, downtown City of Las Vegas, and resort corridor businesses though Final Acceptance of the Project. The contents of these meetings shall include, but not be limited to, conceptual designs, Design Work, L&A concepts, Project Schedule, and TMP for the Project. These meetings include:

- **Public Information**: Assist the Department in conducting three public information meetings. The first meeting shall be held a minimum of 40 days prior to commencement of Construction Work affecting the existing roadways to inform the public of the Project and its schedule. A meeting shall be held 30 days prior to commencement of travel lane restrictions along the US 95/I-515 corridor. A meeting shall be held 30 days prior to commencement of travel lane restrictions along the I-15 corridor.
- **Neighborhood Community**: Assist the Department in conducting information meetings with adjacent neighborhood communities and organizations. Meetings shall occur every 6 months beginning 30 days from NTP1, and continue through Final Acceptance.
- **Emergency/First Responders**: Assist the Department in conducting information meetings with emergency responders. Meetings shall occur every 3 months beginning 30 days from NTP1, and continue through Final Acceptance.
- **Stakeholder**: Assist the Department in conducting stakeholder information meetings with stakeholders including downtown City of Las Vegas, Las Vegas resort corridor businesses, and churches. Meetings shall occur every 3 months beginning 30 days from NTP1, and continue through Final Acceptance. The stakeholder meeting will be held to present the Preliminary L&A Plan.

The Department's Authorized Representative, Department Public Hearings Officer, and Public Involvement Plan Manager will evaluate the need for public informational meetings throughout the life of the Project.

For these meetings, the Design-Builder shall provide a suitable location and date in coordination with the Department; prepare exhibits, handout materials, staff nametags, sign-in sheets, and comment forms; set up and take down exhibits and room furniture; and provide staffing for the presentation of exhibits.

- As part of the preparation for these meetings Design-Builder shall assist the Department in development of the public information and education strategy for the HOV lanes with a focus on the following objectives:
- Educate the driving public about the impending lane conversion, why it is necessary, and its features and benefits.
- Inform affected stakeholder groups, including agencies and elected officials, residents, businesses and travel/transport companies about the conversion, how it will affect them, schedules and timelines, and the ultimate benefit of this conversion for them.
- Develop an open, interactive dialogue with the public about the conversion to ensure timely and accurate information sharing.
- Foster community understanding of the HOV system.
- Maintain, strengthen, and broaden corporate and community partnership in the project area.

Public Information Meeting Notice and Recording Requirements: Design-Builder's Work shall include placement of three public meeting notices in the *Las Vegas Review-Journal*, *El Mundo*, and the *Urban Voice* to announce each public informational meeting. Design-Builder shall place the notices 15 days before the meeting, the day before the meeting, and the day of the meeting. For each public informational meeting, Design-Builder's Work shall include placing door hangers with the meeting information in the project area. Design-Builder also shall place public meeting notices on Facebook and Twitter. In addition, Design-Builder shall be responsible for distributing meeting notices to local churches, libraries, and schools. The notices will be in English and Spanish.

Design-Builder's Work shall include hiring a pre-approved State of Nevada court reporter to record presentations and all oral comments. Design-Builder shall prepare minutes for each public information meeting summarizing the input received from the public and assist the Department in responding to public comments and questions. The Department will provide Design-Builder with the current project contact list for e-blasts, which includes 800 records and the project mailing list for newsletters/notifications (approximately 25,000 records).

Neighborhood Community Meeting Notice and Recording Requirements: For each neighborhood community meeting, Design-Builder shall place door hangers with the meeting information in the project area. Design-Builder shall also place public meeting notices on Facebook and Twitter. In addition, Design-Builder shall be responsible for distributing meeting notices to neighborhood organizations, local churches, libraries, and schools. The notices will be in English and Spanish.

Design-Builder shall prepare minutes for each meeting summarizing the input received from the neighborhood communities and assist the Department in responding to comments and questions.

Emergency/First Responders Meeting Notice and Recording Requirements: For each Emergency/First Responders meeting, Design-Builder shall coordinate an appropriate meeting date and time a minimum of 15 days prior to the meeting date. Design-Builder shall prepare minutes for each meeting summarizing the input received and assist the Department in responding to comments and questions.

Stakeholder Meeting Notice and Recording Requirements: For each stakeholder meeting, Design-Builder shall coordinate an appropriate meeting date and time a minimum of 15 days prior to the meeting date, and prepare and mail out announcements to stakeholders including interested individuals and others on the Project mailing list. Design-Builder shall prepare minutes for each meeting summarizing the input received and assist the Department in responding to comments and questions.

6.3.3 Project Informational Materials

Design-Builder shall provide the Project information materials described in this Section 6.3.3 a minimum of 5 days in advance of the initial public information meeting described in Section 6.3.2 (*Public Information Meetings*).

Project Information Packets: Design-Builder shall develop a detailed information packet that includes a Project description, maps, and a schedule of major Construction Work, traffic control plans, alternate routes, contact names, and telephone numbers. Design-Builder shall provide information packets to businesses, residents, and others as necessary along the Project; provide information packets for distribution to visitors at the Project Office; and update the information packet quarterly, or upon request of the Department during the course of the Project to show current progress, updated schedules, and other changes.

Project Animation Videos: Design-Builder shall provide three dimensional animation videos timeline of the Project along the I-15 corridor and along the US-95/I-515 corridor as describe below. The I-15 corridor videos shall begin at Spring Mountain Road and continue through Washington Avenue. The US 95/I-515 videos shall begin west of Rancho Drive and continue through Main Street. The width of the videos shall capture the areas a minimum of 100 feet beyond the Project ROW to show adjacent properties and buildings.

- Design-Builder shall provide an animation video of the Department's Project Infrastructure and Local Agency Project Infrastructure permanent improvements illustrating the Design-Builder's proposed Project along the I-15 corridor and along the US-95/I-515 corridor. At a minimum the animations shall include representative vehicle movements, permanent traffic control devices, guide signing and ATM System gantries. The volume of traffic shall be similar to the 2025 volumes as described in Section 11 (*Traffic*). The type of vehicles shall be consistent with the existing users as of the Setting Date. The animation videos shall be submitted to the Department for review and comment within a timeframe to allow Design-Builder to modify the videos to address the Department's comments prior to the Construction Work commencement meeting described in Section 6.3.2 (*Public Information Meetings*).

- Design-Builder shall provide animation videos illustrating the Design-Builder's proposed methods of maintaining traffic during construction for each phase/stage of the Construction Work, where travel patterns are rerouted through the Site by either major lane shifts, lane restrictions, Construction Closures, detours, or other temporary configurations not typically anticipated by users. At a minimum the animations shall

include representative vehicle movements, temporary traffic control measures, Construction ATM System, and temporary guide signing. For example vehicles should be moving through the Project Site consistent with the Construction Work and TTCP. The traffic volumes (peak period) and type of vehicles shall be similar with the existing traffic as of the Setting Date. The purpose of the videos are the help inform the public and Stakeholders of upcoming changes in driver expectation caused by the various Construction Work activities throughout the duration of the Project. The animation videos shall be submitted to the Department for review and comment within a timeframe to allow Design-Builder to modify the videos to address the Department's comments prior to the travel lane restriction meetings described in Section 6.3.2 (*Public Information Meetings*).

Animation Details: Design-Builder shall provide a three dimensional (3D) animation video detailing the final configuration of the Project to embed in websites and multimedia presentations (PowerPoint, Keynote, Prezi, etc.). The animation shall be prepared using appropriate 3D software (such as Maya, Cinema 4D, or similar) capable of exporting standalone videos at high-resolution quality (720p or 1080p resolution). In addition, if requested by the Department, Design-Builder shall provide high-resolution screen shots/images from the animation for static visualization purposes.

If working with an outside 3D animation vendor, best practices includes providing layered vector files (pdf, ai, eps, svg, etc.), CAD/3D files (dwg, dgn, dxf, step, obj, fbx, etc.), structural diagrams, and technical drawings and specifications.

Project Renderings: Design-Builder shall provide renderings illustrating the proposed Department's Project Infrastructure and Local Agency Project Infrastructure. The renderings shall illustrate Project infrastructure improvements including L&A Work. The rendering graphics shall be display-quality and mounted on 36-inch by 42-inch display boards, and also will be provided in electronic format. Two display boards will be provided per area (described below). The limits of the renderings shall be the areas a minimum of 100 feet beyond the Project ROW to show adjacent properties and buildings. The renderings shall include, but not be limited to, the following areas of the Project:

- I-15/US 95/I-515 system interchange
- I-15 and Charleston Boulevard interchange area, including Western Avenue, Grand Central Parkway, and Wall Street
- Oakey Boulevard grade separation
- HOV direct connector and the Neon Gateway connection
- University Medical District area

Public Access Videos: Design-Builder shall prepare videos describing and illustrating public access to the Project and adjacent businesses and communities during the Construction Work. A video shall be prepared for each major Construction Work stage for maintenance of traffic as defined in the TMP.

ATM System Information Sheets: Design-Builder shall prepare information sheets describing the ATM system, including the general configuration of ATM gantries, how the system operates, and what travelers should expect from the system. Topics on the ATM system shall include

variable speed limits, queue warning, and lane control. Similar educational information on the ATM system shall be included on the Project website.

Nevada Transportation Board Presentations: Design-Builder shall prepare monthly Project updates to be presented by the Department to the Nevada Transportation Board in PowerPoint format. Design-Builder shall coordinate with the Department for the information and materials to be presented monthly. The presentations will be a minimum of 15 minutes in length. The presentations shall begin no later than 30 days from NTP1 and continue through Final Acceptance of the Project.

Other Materials: Design-Builder shall prepare and support the Department with various social media Project information materials as described in Section 6.3.5 (*Public Notifications*), and Section 6.3.10 (*Public Forums, Project Hotline and Project Website*).

6.3.4 Response to Inquiries and Comments

Questions or comments that are received from residents, businesses, or other members of the public shall be referred to the Public Involvement Plan Manager within 4 hours. Design-Builder shall, in coordination with the Department's Public Involvement Plan Manager, respond to citizen inquiries within 2 Business Days. Design-Builder shall take the necessary steps to facilitate such contact. If Design-Builder receives a complaint regarding its conduct of work on the Project, Design-Builder shall notify the Public Involvement Plan Manager within 4 hours. Design-Builder shall provide the necessary information, staff support, and representation to assist in resolving the issue.

6.3.5 Public Notifications

Design-Builder shall facilitate the Department's notification of the public and affected businesses and residents. As directed by the Department, this shall include direct contact with affected parties for updates on upcoming events. Design-Builder shall provide the specific notifications listed in Table 6-1 to the Department and the Public Involvement Plan Manager for review and comment 10 days before being sent to the public. The form of the notifications (e.g., flyers, website notice, social media) will be decided during the course of the Project. Utility shutoff/diversion announcements shall be coordinated in advance with the Department. Design-Builder shall prepare a written notice to the affected parties for review and approval by the Department.

6.3.6 Adjacent Property Owners

While Construction Work is ongoing, Design-Builder shall notify in writing all affected property owners or responsible parties of any temporary closure or modified access to property due to construction operations. Design-Builder shall also hold monthly meetings for the property owners and businesses affected for forward-looking updates and receiving feedback on temporary closure or modified access. Furthermore, Design-Builder shall give the written notice together with a copy to the Department between 7 and 14 days in advance of affecting the property, providing the details and duration of the temporary closure or modified access.

6.3.7 Public Contact Records

Design-Builder shall maintain a consistent system for documenting all Design-Builder and Department contact with business owners, residents, the media, and property owners. Unless otherwise directed, Design-Builder shall direct all requests for comment to the Public Involvement

Plan Manager. Design-Builder shall provide the Public Involvement Plan Manager with an electronic copy of all public contact records. The file shall be included in the monthly Progress Report and shall include all contacts made before the 25th of the previous month.

Table 6-1 Public Notifications

Notice	Requirement
Lane Closure	Depending on the duration of the closure, written notices shall be posted in advance of planned closures at the start and end of the Project and at intermediate interchanges with the local road network. The Department and Design-Builder will coordinate the length of time the written notices will be posted in advance of the planned closures. Design-Builder shall coordinate the notification with the Department's assigned public involvement contact.
Critical Utility Shutoff/Diversion	Written notice shall be posted for at least 48 hours, or as agreed to in Utility Agreement, in advance of shutoff and, as applicable, diversions. Copy of the notice shall be given to the Public Involvement Plan Manager for review and comment. Design-Builder shall coordinate the notification with the Department's assigned right-of-way contact.
Business/Commercial Utility Shutdown	Written notification of a Utility shutdown or diversion for businesses and commercial property shall be posted for at least 48 hours, or as agreed to in Utility Agreement, in advance of shutdown. Copy of the notice shall be given to the Public Involvement Plan Manager for review and comment. Design-Builder shall coordinate the notification with the Department's assigned right-of-way contact.
Residential Utility Shutdown	Written notification of Utility shutdown or diversion for residential property shall be posted for at least 48 hours, or as agreed to in Utility Agreement, in advance of shutdown. Copy of the notice shall be given to the Public Involvement Plan Manager for review and comment. Design-Builder shall coordinate the notification with the Department's assigned right-of-way contact.
Weekly Construction Updates	Construction updates shall be provided weekly and shall identify all planned traffic shifts, lane closures, and Utility shutdowns and activities. Updates shall cover at a minimum the previous week and project out for the next 6 weeks. Design-Builder shall coordinate the notification with the Department's assigned contact.
Emergency Unforeseen Utility Disruptions, Hazardous Conditions, Traffic Emergencies, Security, and Loss of Access	See Section 6.3.8 (*Emergency, Unforeseen Utility Disruptions, Hazardous Conditions, Traffic Emergencies, Security, and Loss-of-Access Notifications*). Design-Builder shall coordinate the notification with the Department's assigned contact.
Road and Driveway Closures	Written notice and personal contact shall be provided in advance of closure, as specified in Section 12 (*Maintenance of Traffic*). Copy of the notice shall be given to the Public Involvement Plan Manager for review and comment.

Table 6-1 Public Notifications

Notice	Requirement
City of Las Vegas Jurisdictional Impact	Contact City of Las Vegas Public Affairs Office Diana R. Paul, Public Affairs Manager (702) 229-6582 (office) (702) 271-3030 (cell) (702) 464-2632 (fax) pao@lasvegasnevada.gov

6.3.8 Emergency, Unforeseen Utility Disruptions, Hazardous Conditions, Traffic Emergencies, Security, and Loss-of-Access Notifications

Design-Builder shall develop a Safety Plan, which is a component of the PMP, for all Work, with input from law enforcement and fire suppression agencies. Attachment 01-2 (*Safety and Health – Safety Plan*) includes the minimum requirements for the Safety Plan and the plan shall, address the key features listed below:

- OSHA safety measures and procedures
- Emergency Plan, and Incident Management Plan, including emergency response measures to construction sites
- Construction site security
- Traffic control safety measures and procedures
- Review schedule for Temporary Traffic Control Plans to confirm adherence to safety procedures

The submission schedule and review requirements are in accordance with Attachment 01-3 (*Project Management Plan*).

At a minimum, the Safety Plan shall require Design-Builder to provide immediate response to emergencies by trained personnel from an incident response team within 60 minutes of receiving notification from the Department, law enforcement or fire suppression agencies, Utility Owners, and, as applicable, affected businesses or residents.

Design-Builder shall cooperate with the Nevada Highway Patrol, FAST, local law enforcement, the Department's Freeway Service Patrol, and other emergency responders in dealing with vehicle breakdowns, accidents, fires, spills, or other emergencies in any area affected by the Project, including those on the construction site and on public traffic lanes. Design-Builder shall allow emergency vehicles immediate passage. Design-Builder shall cooperate in all agency investigation of accidents and other incidents along the Project.

Immediately following the initiation of actions necessary for the security of people and property, Design-Builder shall coordinate with the Department the explanation of all emergency or unforeseen disruptions. The Department will serve as the spokesperson with affected parties and media for all emergencies and, as applicable, unforeseen disruptions. At a minimum, Design-Builder shall provide the Department with details on the following:

- Cause of disruption (i.e., whether it is construction-related or not)
- Actions being taken to alleviate the issue
- Responsible party for the actions
- Anticipated duration of the disruption

Design-Builder shall establish and manage an emergency response telephone tree. All appropriate emergency response agencies shall be included on this telephone tree for immediate response in the event of an emergency. The telephone tree shall be divided into areas of expertise so that the proper people are called for specific emergency situations.

Design-Builder shall notify the Department 1 month in advance before starting Construction Work in any area of the Project.

6.3.9 Special Events, Conventions, and Annual Events

The Project is located within the Las Vegas resort corridor where multiple events and conventions occur on a regular basis. Design-Builder shall collaborate with the Department in minimizing impacts to the traveling public during these times. The Department has classified these events as Special Events, conventions, and annual events. The Special Events are listed in Table 6-2. A preliminary lists of conventions and other annual events are listed in Tables 6 3 and 6-4.

Design-Builder shall coordinate with the Department, the Regional Transportation Commission of Southern Nevada (RTC), the Las Vegas Convention and Visitors Authority (LVCVA), and the City of Las Vegas and other agencies to identify how these events will be accommodated.

Design-Builder shall supplement and update these lists annually during the Work to ensure all area events, including, but not limited to, parades, major political events, auto racing, major downtown Las Vegas events, and large athletic events (such as boxing and marathons) continue to be accommodated for acceptance by the Department.

The potential for adverse impacts to the traveling public during Special Events is notably more than conventions and annual events. Design-Builder shall ensure that Construction Work does not cause travel delays or increase travel times through the Site during the Special Events listed in Table 6-2. Construction Closures during Special Events shall be as defined in Section 12.4.3.4 (*Construction Closures Special Events*). Design-Builder's Construction Work shall allow public access to the location indicated for each Special Event. Public access to a Special Event location shall be uninterrupted for the entire Special Event duration as indicated in Table 6-2.

Table 6-2 Special Events

Month	Special Event Name	Location	Duration
January	Las Vegas Winter Market	World Market Center	5 days
January	International CES	Las Vegas Convention Center	4 days
January	International Builders Show	Las Vegas Convention Center	3 days
January	Shooting, Hunting & Outdoor Trade Show	Sands Expo & Convention Center	4 days
March, April	Las Vegas World of Concrete	Las Vegas Convention Center	5 days
March	National Association of Broadcasters	Las Vegas Convention Center	6 days
March	NASCAR	Las Vegas Speedway	3 days
May	Helldorado Rodeo / Parade	Downtown	5 days
June	Electric Daisy Carnival (EDC)	Las Vegas Speedway	3 days
July	Las Vegas Summer Market	World Market Center	10 days
August	MAGIC Marketplace Fall Show (Men and Women's Fashion – buyers)	Las Vegas Convention Center	4 days
September	iHeartRadio Music Festival	MGM	2 days
October	Professional Bull Riders Tour	Thomas and Mack Center	4 days
November	Automotive Aftermarket Industry Week (AAIW)	Sands Expo & Convention Center / Las Vegas Convention Center	4 days
November	Rock "n" Roll Vegas Marathon & Half Marathon	Downtown	1 day
December	National Finals Rodeo (NFR)	Thomas and Mack Center	10 days
To be confirmed	Conexpo- Con / Agg[1]	Las Vegas Convention Center	5 days

[1] Held every 3 years, last in 2014.

The conventions and annual events listed in Tables 6 3 and 6-4 are intentionally included to provide Design-Builder with the widest range of events that shall be accommodated by the Construction Work. Design-Builder's Construction Work shall allow public access to the specific venues listed in Tables 6-3 and 6-4 (e.g., Las Vegas Market at the World Market Center) and the general area for events that are not venue-specific (e.g., Helldorado Parade in downtown Las Vegas).

Table 6-3 Conventions

Convention Name	Location
International Esthetics Cosmetic and Spa Conference (IECS) 2015	Las Vegas Convention Center
American Academy of Ophthalmology Annual Meeting 2015	Sands Expo & Convention Center
Power-Gen International Conference 2015	Las Vegas Convention Center
RECon 2015	Las Vegas Convention Center
2015 Mr. Olympia	Las Vegas Convention Center
Kitchen and Bath Industry Show 2015	
RECon 2015	Las Vegas Convention Center
Nightclub and Bar Show 2015	Las Vegas Convention Center
National Business Aviation Association, Inc. (NBAA) 2015 Annual Meeting & Convention	Las Vegas Convention Center
American Academy of Orthopaedic Surgeons AAOS Annual Meeting 2015	Sands Expo & Convention Center
National Hardware Show 2015	Las Vegas Convention Center
Super Mobility Week 2015	Sands Expo & Convention Center

Table 6-4 Annual Events (By Month)

Month	Event Name	Location
February	Martin Luther King Jr, Parade	Downtown LV / 4th Street (from Gass Avenue to Ogden Avenue)
February	Las Vegas Mayor's Cup International Soccer Tournament	Downtown Las Vegas Soccer Club/ 922 S Valley View Blvd.
February	Chinese New Year	Freemont / Downtown
April	Viva Las Vegas	Gold Coast
April	Mardi Gras Celebration	Freemont / Downtown
May	Cinco de Mayo	Lorenzi Park/ Washington Ave
May	Rocky Mountain Gun Show	South Point Hotel Casino
May	Billboards Music Awards	MGM Grand Casino
July	NBA Summer League	Thomas and Mack
June	FSE Vegas Cruise	Freemont / Downtown
September	PRIDE Parade	4th Street
September - October	Las Vegas Bike Fest	Cashman Center / Golden Nugget
December	New Year’s Eve Celebrations	Las Vegas Blvd Strip to Freemont
Monthly	First Friday's	Art District Downtown

6.3.10 Public Forums, Project Hotline and Project Website

At the request of the Department, Design-Builder shall participate in the Department-organized public forums. Design-Builder shall provide, host, and maintain a Project-specific hotline and Project website. For better oversight and ease of administration, the Department will reserve ownership of the www.ndotprojectneon.com domain name in the Department's name. Design-Builder will be responsible for ensuring that all Department-provided website design templates or elements, such as the existing Department masthead and footer template, are displayed on the site. The website must include embedded live video feed from two or more existing FAST traffic cameras within the Project corridor for public viewing. The Department will determine which FAST traffic cameras Design-Builder should use. Design-Builder shall initiate and post weekly updates and content to the Project website after review and comment from the Department. Design-Builder shall activate the Project Website within 15 days of NTP2 and host and maintain the Project website through Final Acceptance.

Design-Builder shall support the Department in the use of social media to inform and engage stakeholders and the general public. The Department will be responsible for maintaining and hosting a minimum of three social media accounts, including, but not limited to, Twitter and Facebook through Final Acceptance. Design-Builder social media activities include:

- Post pertinent updates regarding the Project to each social media channel a minimum of once a week, with major traffic control impacts (including, but not limited to, upcoming lane, ramp, and other access closures and accompanying detour information) routinely posted 1 day in advance. Other examples of social media content include project-related events, updates, photos and other construction schedule elements.
- Respond to citizen inquiries or comments posted to project social media sites within 2 Business Days, in coordination with the Department's Public Involvement Plan Manager.
- Track social media citizen engagement on a monthly basis through a monthly log of number of followers and engagement (number of citizen comments posted) provided to the Department's Public Involvement Plan Manager.
- Provide a means for the Public to comment through a survey mechanism on the website and other social media. The survey format should be comprised of a multiple choice type of selection with questions focused on performance, issues, and other challenges associated with the Project.

6.3.11 Construction Progress Photographs and Videos

Design-Builder shall provide the Department with preconstruction and Construction Work progress photographs and videos as described in Section 1.3.2 (*Documentation of Site*).

Distinct from progress documentation photos, the purpose of photos and video identified in this Section 6.3 is to facilitate public information via the Project website(s), newsletters, and other such materials. At the Department's direction, Design-Builder will document the construction, public outreach meetings, and other Project-related events using photographs and video. Design-Builder will make photographic records and video available to the Department for various public information presentations, inquiry responses, or documentation reviews. Any additional photographs and video taken by Design-Builder during Construction Work of the Project shall be provided to the Department when requested. In addition, Design-Builder shall accommodate the

Department's requests to take additional photos and video. Design-Builder will not be responsible for photographing accidents or other similar incidents beyond the Design-Builder's control.

After Construction Work begins, monthly photograph submissions shall include, at a minimum, 50 new progress photos. Selected photos will be posted to the website photo archive, and will be arranged by month and project section.

Digital images shall be provided in JPEG or uncompressed TIFF format, produced by a digital camera with a minimum sensor size of 8.0 megapixels and at an image resolution of not less than 1024 by 768 pixels. Each photograph will have an associated date and time, along with a short annotation noting approximated position of the viewer, view direction, and activity. Vantage points and proposed timelines for photographs shall be coordinated with the Department.

6.3.11.1 Multimedia Project Monitoring and Documentation

The Design-Builder will provide a minimum of four high-definition megapixel web cameras to remotely view the Project on a secure network connection. The four camera specifications may be different to match the intended public information and Project documentation purposes. One lower-resolution camera will provide greater mobility throughout the Project work zones and document Project elements as they are completed; while three higher-resolution cameras will provide a fixed view of longer-term Project elements. Cameras will operate continually throughout the Project term.

The one lower-resolution camera shall be a 12-megapixel camera. The web camera shall meet or exceed the following requirements:

- Thermostatically controlled environmentally sealed enclosure with stainless steel hardware and double-locking pan/tilt head
- Industrial-grade solid-state embedded Linux System
- 12.2-megapixel images (4272 x 2848 pixels), digital single-lens reflex (SLR) camera with a 22.2 millimeter (mm) x 14.8 mm CMOS image sensor
- Lens: F-Stop: F/35-F/5.6, 18 to 55 mm, optical zoom
- Auto features: ISO, shutter, white balance, and focus
- 528 x 352 live streaming video preview window
- Communications: 10base-T/100base-TX Ethernet, IP addressing: dynamic or static
- 3-G or 4-G cellular modem
- On-board data backup to provide a minimum of 30 days of on-board image retention
- 120-VAC, 220- to 230-VAC, or 12-VDC power
- Designed for EarthCam Control Center (or Department-approved equal)

The three higher-resolution cameras shall be gigapixel cameras providing the following functionality.

A. The robotic high-definition webcams shall meet or exceed the following requirements:
    - Thermostatically controlled IP66/IP67 rated environmentally sealed black powder-coated enclosure with stainless steel hardware

- Impact-resistant black powder-coated enclosure with stainless steel hardware
- User-controlled window wiper
- Industrial-grade solid-state embedded Linux System
- Ultra-precise, pan/tilt robotic base designed to provide consistent imaging in all environments
- Pan/tilt: pan range 360° continuous pan, tilt: +30° to -90° from level; motor type: stepper
- Auto-generated 360° megapixel panoramas up to 1 gigapixel (1,000 megapixels)
- 16.2 megapixels (4928 x 3264 pixels), digital SLR camera with a 15.6 mm x 23.6 mm DX-format CMOS image sensor
- Lens: F/3.5-F/5.6, 18 mm to 55 mm, optical zoom
- Nikon optics for superior image quality
- Auto features: ISO, shutter, white balance, and focus
- 640 x 426 live streaming video preview window
- Communications: 10base-T/100base-TX Ethernet; IP addressing: dynamic or static
- 3-G or 4-G cellular modem
- On-board data backup to provide a minimum of 30 days of on-board image retention
- 120-VAC, 220- to 230 VAC, or 12-VDC power
- Designed for EarthCam Control Center (or Department-approved equal)

B. Internet-Based Online Interface: The camera will be accessible via an Internet-based Software as a Service (SaaS) solution. This online interface will be managed and supported by the System Vendor. The service will be available for the term of the Project and allow the viewing of live video and high-definition digital still images of the Project captured and stored via a secure password-protected website. The Internet Based Online Interface shall include the following features:

- Display Project name and logo
- Multiview screen for viewing and accessing multiple cameras
- Real-time live video viewing
- User-controllable robotic pan, tilt and zoom
- User-controllable settings for creating and editing multiple preset compositions
- Automatically generated daily panoramas
- Programmable gigapixel panoramas
- Onscreen control button for wiper control to allow for remote cleaning of the viewing window
- Picture-in-picture capability for viewing live video and high-definition megapixel images simultaneously

- Digital pan, tilt, and zoom capability within high-definition images
- Custom tiling player to easily view high-definition panoramic images
- Instant live snapshot capability in addition to preset scheduled archives
- HDR (High Dynamic Range) imaging and additional special effects
- Calendar based navigation system for selecting specific images and times
- Multifunction image browsing
- Time-lapse feature for instant time-lapse viewing and image playback by day, week, month, or year
- Full Screen mode for displaying complete image without any graphical frame
- Graphical markup tools for detailing and creating notes with graphical overlays on images
- Image comparison tool for comparing two images taken at different times, overlayed on top of each other
- Share image tool for saving, printing, emailing, sending to mobile devices, and posting to notes section
- Notes section for posting images with notes, uploading photos, videos, and files directly from a desktop or mobile device
- Social media integration tools for sharing Project images and notes on Facebook and Twitter
- Graphical weather applet displaying local weather data with satellite and updating radar imaging
- Integration of Google Maps, aerial and satellite imagery
- Data management tools showing archived and current system status of solar amperage, battery power remaining, wireless radio connectivity, and device location
- Automatically generated progress reports (in PDF and PowerPoint formats) using daily or weekly camera images with associated weather data, notes, and client logo

C. Access to account protected by account security feature, which includes four levels of password protection, IP address block/permission, and SSL protection of user login password.

D. The system shall capture and upload images every 15 minutes, 24 hours per day.

E. The system shall have M2M – machine-to-machine 24/7 support with active self-healing technology and automatic software upgrades to maintain the quality, consistency, and reliability of all images.

F. Images will be maintained on the system vendor's servers for reference available at all times during the life of the Project and for no less than 60 days after completion. All images will be protected on servers owned and operated by the system vendor and located in a secure area at the system vendor's location.

G. The Design-Builder shall provide all service and maintenance, including cleaning, of the camera system throughout the life of the Project including making appropriate arrangements for the camera to remain in operation up to and through finalization of all structural, landscaping, and "completed state" condition necessary for a beginning-to-end time-lapse record.

H. The system vendor shall provide custom public website development. Website shall be separate from the online interface, match the look and colors of the Project's website, and be delivered as embed code or stand-alone web page. Additional features include Facebook and Twitter integration, full-screen mode, image comparison, weather, multiple logos, graphical background image, and Project description.

I. The system vendor shall provide time-lapse movie(s) at the end of the Project. Time-lapses shall be professionally edited by a video editor using image stabilization software. The movie will start with a graphic, incorporating Project title, date, and logo. Periods of bad weather or inactivity shall be removed to produce a compelling and consistent movie. A machine-edited movie will not be acceptable.

J. The Design-Builder shall secure a nearby structure for camera mounting or provide a fixed pole (40-foot [12-meter] height recommended) and 3-inch (8-centimeter) minimum diameter as per system vendor's instruction. The Design-Builder shall supply all equipment required for safe and secure access to the camera location for technicians performing installation and maintenance services, including building access, bucket truck, and/or lift. The system vendor will consult on, and provide recommendations for, optimal camera placement and provide professional installation services as required.

6.4 Department's Public Involvement Responsibilities

As indicated in Section 6.1 (*General*), the Department shall lead the public involvement effort and be supported by Design-Builder. The Department's responsibilities as lead comprise the following activities:

- Designate a Public Involvement Plan Manager to function as a single point of contact for Design-Builder regarding PIP activities.
- Maintain QA of any approved communication efforts by Design-Builder.
- Liaise with and monitor Design-Builder's performance for compliance with the PIP requirements of the Contract Documents.
- Function as the official spokesperson for the Project with support from Design-Builder.
- Coordinate media activities, such as interviews, including those with Design-Builder staff if necessary; press releases; and media events.

6.5 Media Relations

Media relations will be handled by the Department. Design-Builder shall assist by providing timely information to the Department regarding construction activities for use in media events.

Design-Builder shall not interface with the media without the express consent of the Department, except as specifically directed by the Department. Design-Builder shall immediately notify the

Department of any situations, including emergencies, which may involve the media. Refer to Section 12.3 (*Transportation Management Plan*) for additional information.

6.6 Public Information Office

Design-Builder shall establish and maintain a public information office (PIO) throughout the term of the Contract. This office shall serve as the primary business location for Design-Builder's Public Information Manager and Public Information Coordinator as well as the Department's Public Information Officer. The PIO shall be located within 0.5 mile from Charleston and I-15 Interchange.

The PIO shall facilitate the exchange of information between Design-Builder and the public and provide a centralized location for local residents and other stakeholders to obtain information on the Project, including Project maps and Plans, alternative routes, lane closures, construction updates, community impacts, and commute options.

During major construction, the minimum hours of operation of the public information office shall be as follows unless otherwise jointly agreed upon by the Department and the Design-Builder:

Monday, Tuesday, Wednesday, Thursday, and Friday:	9:00 am –6:00 pm
Saturday:	9:00 am – Noon
Sunday:	Closed

If there is an emergency or a need arises to better serve the public, hours of operation may be required to be extended.

The Design-Builder's PIO shall be equipped with:

- A 24-hour telephone hotline and an answering machine or answering device with the capability to record a message from the caller. The telephone line must be a local number.
- A fax line with local number
- A dedicated e-mail account
- 2 cubicles for Design-Builder's Public Information Coordinator and a supporting staff
- 1 office for Design-Builder's Public Information Manager
- 1 office for Department's Public Information Officer (140 square feet, enclosed office space with locking door)
- A computer with internet access and a touch-tone telephone for each personal office area

The 24-hour hotline must be manned during normal business hours of the PIO, with a recorded message describing Emergency procedures after hours. Design-Builder shall respond to voicemail messages left after hours within 24 hours of receiving the voicemail message.

The Public Information Manager shall record a friendly greeting on the project's published phone line each week, updating the message throughout the week, as necessary, depending on changes in work schedule, activities and traffic impacts. The recording shall include each week's

forthcoming activities including work days, hours and expected traffic delays, posted detours, project completion date, and office hours.

The PIO shall have readily available at least one conference room capable of hosting meetings with public officials, key stakeholders media, and others. The rooms shall be ADA-compliant and appropriately supplied with electrical outlets, tables and chairs, and other basic equipment to meet meeting requirements. The conference room shall accommodate at least fifteen (15) persons. Other requirements of the conference room include:

- 3 floor-standing easels for Project boards
- Dimmable lighting
- High definition computer projector and minimum 70-inch flat panel monitor with VGA/HDMI accessibility
- Basic cable television connections or service
- One touch-tone conference telephone with satellite microphones, each with a status indicator, caller ID, access to all outside lines, and conference-call capability

6.7 Submittals

Public involvement Submittals shall include, but not be limited to, the documents identified below. Design-Builder shall provide Submittals as set forth in Section 3 (*Design Quality Management*). The timeframe for the public involvement Submittals shall be as described in this Section 6.

As a component of the PMP, Design-Builder shall submit the following:

- A PIP, which shall include a Community Outreach Plan, describing how Design-Builder proposes to support the Department as it engages communities, neighborhood organizations, historic preservation groups, and other stakeholders in the design and construction of the Project.
- A Safety Plan developed with input from law enforcement and fire suppression personnel describing Design-Builder's process for responding to emergencies within the Site.

Design-Builder shall submit the following:

- Materials required to conduct and document a public informational meeting as described in Section 6.3 (*Requirements*).
- Project information materials specified in Section 6.3.3 (*Project Information Materials*).
- Specific notifications listed in Table 6-1 in Section 6.3.5 (*Public Notifications*). The form of the notifications (e.g., flyers, website notice, social media, etc.) will be agreed during the course of the Project.
- Electronic copy of all public contact records as described in Section 6.3.7 (*Public Contact Records*). The file shall be included in the monthly Progress Report and shall include all contacts made before the 25th of the previous month.

7 ENVIRONMENTAL

7.1 General

Design-Builder shall design and construct the Project in accordance with the requirements of the Contract Documents, including this section of the Technical Provisions, the Project Standards, Environmental Laws, Governmental Approvals, and all applicable Government Rules.

Further discussion of the environmental impacts of the Project, which are included in the RIDs, is provided in the following documentation:

- I-15 Corridor and Local Arterial Improvements Project (Project NEON) 2014 FEIS Reevaluation
- I-15 Corridor and Local Arterial Improvements Project (Project NEON) 2012 FEIS Reevaluation
- I-15 Corridor and Local Arterial Improvements Project (Project NEON) 2010 ROD
- I-15 Corridor and Local Arterial Improvements Project (Project NEON) 2010 FEIS and Section 4(f) Evaluation
- I-15 Corridor and Local Arterial Improvements Project (Project NEON) 2009 Draft Environmental Impact Statement (DEIS) and Section 4(f) Evaluation

7.2 The Department's Environmental Roles and Responsibilities

The Department has conducted extensive coordination with the public and various state and federal environmental and regulatory agencies throughout the development of the DEIS approved on September 3, 2009; the FEIS approved on May 28, 2010; the ROD approved on October 21, 2010; the FEIS Reevaluation approved on August 29, 2012; and the FEIS Reevaluation pending approval in fall 2014. The Department has obtained those Environmental Approvals listed in Attachment 07-1 (*Permits and Status*), which are designated as Department-Provided Approvals. The Department hereby delegates to Design-Builder responsibility to perform all conditions, commitments, and requirements contained in or arising out of the Department-Provided Approvals.

7.3 Design-Builder's Responsibilities

Comply with all conditions and requirements of all Governmental Approvals and Environmental Laws; comply with, achieve, and maintain the environmental requirements and commitments. Design-Builder shall ensure that the requirements of the DEIS, FEIS, ROD, Reevaluation of the FEIS, and other Environmental Laws and Environmental Approvals are fully met and documented.

Implement, maintain, and monitor all environmental onsite commitments to minimize and reduce potential environmental impacts in accordance with the provisions of Appendix 2 Department-Provided Approvals, any other Governmental Approvals, and as required by all permit conditions from issuance of NTP1 through 2 years following Final Acceptance.

Conduct additional studies, as necessary, to document that Final Design Documents are in compliance with the Project Standards, Governmental Approvals, and Governmental Rules. Coordinate both Design Documents and environmental requirements, as they develop, to

minimize environmental impacts and comply with Governmental Rules, Governmental Approvals, and Good Industry Practice.

7.3.1 Environmental Management System

Design-Builder shall development and implement an Environmental Management System (EMS). The EMS shall meet the requirements of ISO 14001 and shall include all environmental performance requirements in this Section 7. The EMS shall track progress and include the necessary inspection schedules, maintenance checklists, timelines, and standards to ensure compliance on all environmental performance requirements set forth or referenced in this Section 7. The EMS shall include a list of required Governmental Approvals, including Environmental Approvals, necessary to deliver the Project as described in Section 7.4 (*Governmental Approvals and Modifications*).

7.3.2 Environmental Compliance and Mitigation Plan

Design-Builder shall submit to the Department an Environmental Compliance and Mitigation Plan (ECMP) in accordance with Section 1.5 (*Project Management Plan*), Attachment 01-3 (*Project Management Plan*), and this Section 7, and shall include the following:

- Description of how Design-Builder shall achieve full compliance with the Project's mitigation measures, considerations, conditions of Environmental Laws and Environmental Approvals, and any conditions or comments issued by the Department as part of the Design Review.
- Description of how and where Design-Builder proposes to avoid or minimize impacts to historic properties and waters of the United States.
- Description of Design-Builder's process, structure, organization location, and methods proposed for documentation, communication, and QA/QC with respect to environmental compliance.
- Description of Design-Builder's plan to take corrective action to keep the Project in compliance with all Environmental Laws and Environmental Approvals and the Project's commitments at all times.

Design-Builder shall be responsible for compliance with the requirements of this Section 7 in both the design and construction of the Project. During Construction Work, and as part of the ECMP, a separate quarterly summary report shall be prepared and submitted to the Department for review and comment that compiles and tracks all impacts associated with implementing environmental compliance measures. This report shall document all environmental impacts and anticipated impacts to resources that were identified in the Contract Documents, FEIS Reevaluation, ROD, FEIS, and any Governmental Approval, covered by Local, State, or Federal Laws. Design-Builder shall submit the report to the Department for review and comment within 1 week after the end of each quarter. The report is to stipulate those requirements that are to be reviewed by the Department and those requirements that are expected to be reviewed in the subsequent two quarters.

7.3.3 Environmental Quality Management Plan

As a component of the PMP, Design-Builder shall provide a comprehensive Environmental Quality Management Plan (EQMP) that describes how it intends to manage the environmental

components of the Project in accordance with the requirements of the Contract Documents including this Section 7, the EMS and the ECMP. The requirements of the EQMP are found in Attachment 02-5 (*Environmental Quality Management Plan*).

7.3.4 Environmental Compliance Manager

Design-Builder shall designate an on-staff Environmental Compliance Manager (ECM) to be responsible for implementing all the environmental design and construction commitments and conditions of Environmental Approvals required for the Project. Design-Builder shall maintain necessary certified and licensed individuals on staff. The ECM shall report directly to Design-Builder's Project Manager and shall be the primary liaison to the Department for environmental issues. The ECM is a Key Personnel position and shall be a full-time, onsite member of Design-Builder's staff. The ECM shall have the authority to stop or redirect Construction Work at any time as needed to maintain environmental compliance.

7.3.5 Environmental Compliance and Mitigation Training Program

Design-Builder shall develop and implement an environmental compliance and mitigation training program at a minimum for supervisory personnel, including those of Subcontractors who will enter within the Site boundaries to perform Construction Work. The training shall provide supervisory personnel with an understanding of all necessary environmental compliance requirements and any environmental issues for the Project.

The training shall cover the following elements:

- Permanent and temporary erosion and sediment control measures – sequencing, implementation, and maintenance
- Maintaining approved limits of disturbance
- Tree and shrub protection
- Avoidance and minimization of impact to waterways and stormwater conveyances
- Seasonal work restrictions – trees, waterways, and migratory birds
- Pumping and dewatering operations
- Accidental discovery of archaeological material or human remains
- Impacts and consequences for departure from approved operating procedures
- Hazardous Materials
- No work zones
- Historic properties
- Construction noise mitigation
- Dust and construction emissions mitigation
- Identification and reporting of illicit stormwater connections and discharges
- Construction site general housekeeping measures
- Concrete and asphalt waste material management

- Batch plant operations – stormwater pollution control
- Spill prevention, response, and cleanup
- Stormwater inspections
- Requirements of the Stormwater General Permit
- Incident Management Plan described in Section 6.3.8 (*Emergency, Unforeseen Utility Disruptions, Hazardous Conditions, Traffic Emergencies, Security, and Loss-of-Access Notifications*)

The environmental compliance and mitigation training program is a component of the PMP. Design-Builder shall finalize the environmental compliance and mitigation training program before starting any Work tasks associated with construction activities within the Site boundaries. Design-Builder shall submit the environmental compliance mitigation training program as a component of the PMP. Design-Builder shall not allow any supervisory personnel to enter the Project ROW or Site without completing the required training. Design-Builder shall revise the training program regularly to reflect the most current policies, rules, and regulations and provide annual updates to this training program for supervisory personnel to the Department.

7.4 Governmental Approvals and Modifications

The Department has not obtained and will not obtain any Project-related environmental Governmental Approvals beyond those listed in the table titled "Department-Provided Approvals" in Attachment 07-1 (*Permits and Status*). Design-Builder shall be responsible for obtaining and maintaining all other Governmental Approvals necessary to deliver the Project and shall comply with all conditions and requirements of all Governmental Approvals. Refer to Sections 6.11 of the Contract for specific requirements, obligations, and information regarding Governmental Approvals and Environmental Approvals, including any modifications to Governmental Approvals, Major Environmental Approvals, and Major Environmental Approval Deadlines.

Design-Builder will create a list of required Governmental Approvals, including Environmental Approvals, necessary to deliver the Project and submit the list to the Department within 15 days of NTP2. Design-Builder shall update the list as necessary through Substantial Completion to incorporate any additional Governmental Approvals identified by the Department or Design-Builder or that are otherwise required to deliver the Project.

7.4.1 Government Approval Submittals

Design-Builder shall submit to the Department a copy of the issued permit and related documentation for Governmental Approvals for which Design-Builder is responsible.

7.4.2 Governmental Approval Modifications

Refer to Section 6.11 of the Contract for Design-Builder's obligations with respect to modifications, renewals, and extensions of Governmental Approvals.

7.5 Environmental Requirements

7.5.1 Natural Resources

7.5.1.1 Groundwater

Where dewatering is required to facilitate construction, Design-Builder shall contact the State of Nevada Division of Water Resources to acquire a dewatering waiver request. The completed waiver form will be submitted to the Division of Water Resources and must be approved before dewatering can begin. The dewatering procedures used by Design-Builder shall comply with the provisions in the Department's *Construction Site Best Management Practices (BMPs) Field Manual* (BMP NS-2). If artesian water is encountered in any well or borehole, Design-Builder shall control it as required by NRS Section 534.060(3). If a non-abandoned well is encountered during construction, Design-Builder will notify the State of Nevada Division of Water Resources and retain a Nevada-licensed driller to abandon the well.

7.5.1.2 Surface Water

No perennial waterways cross I-15 in the Project area. Drainages under I-15 and parallel to it convey stormwater that may ultimately reach the Las Vegas Wash, a Water of the United States which is on the United States Environmental Protection Agency's (USEPA) Section 303(d) list of impaired waters. Design-Builder shall include all measures to control and minimize erosion and water quality impacts from construction activities related to the Project. Design-Builder shall include BMPs found in *Storm Water Quality Manuals: Construction Site Best Management Practices (BMPs) Manual,* which is listed in Section 26 (*Standards and References*).

7.5.1.3 Waters of the United States

On January 23, 2013, the Department sent a preliminary Jurisdictional Determination Report to the U.S. Army Corps of Engineers (USACE) seeking the agency's input on whether there are Waters of the U.S. within the Site. On March 3, 2014, the USACE sent a letter to the Department indicating that the only potential Water of the U.S. in the Project area is a drainage feature on the west side of I-15 between South Rancho Drive and I-15, which extends approximately 2,169 feet between Meade Avenue on the south and a point between Kings Way and West Sahara Avenue on the north. The drainage feature consists of a pebble segment, a rip-rap segment, and a concrete channel. The USACE indicates that a Section 404 permit would be required for potential impacts to the drainage feature. Design-Builder shall determine impacts to the above-described drainage and coordinate with the USACE to obtain the permit. The Department's Preliminary Jurisdictional Determination Report and the USACE's response letter can be found in the RIDs. On March 6, 2014, the Department signed a copy of the Preliminary Jurisdictional Determination Form accepting the USACE's determination. The signed form allows the USACE to accept and process a preconstruction notification or permit application from Design-Builder for the Project.

7.5.1.4 Avoidance and Minimization

Because the Project is located in a highly developed urban area, a premium is placed on protecting vegetated areas. To protect vegetated areas within the Site, Design-Builder shall install preservation fencing as described in Section 5.4.1 (*General*).

Native Nevada cacti and yucca are protected and regulated by the NRS. Design-Builder shall salvage native Nevada cacti and yucca that will be affected by construction. All salvaged yucca and cacti shall be replanted in permanent locations on the site.

Vegetation/structure removal shall be conducted to conform with the Migratory Bird Treaty Act (MBTA) to avoid impacts to listed migratory birds (Title 50 of the *Code of Federal Regulations* Section 10.13 [50 CFR §10.13]) that may be actively using vegetation/structures for nesting. Design-Builder shall not remove vegetation/structure during avian breeding season (generally March 15 through July 31). Raptors and owls may begin nesting as early as January. If vegetation/structure removal must occur during avian breeding season, nesting surveys must be conducted by a biologist with experience in bird identification, general nesting behavior, nest and egg identification, and knowledge of habitat requirements for migratory birds. The survey shall be conducted a maximum of 14 days in advance of land disturbance. Design-Builder shall submit a copy of the biologist's survey report and the biologist's curriculum vitae to the Department for review and comment.

If nesting sites are found within the Site, the Department must be consulted within 24 hours to identify a suitable buffer area around the nest site. The buffer area around the nest site will be flagged as an avoidance area. No disturbance will occur within the flagged avoidance area while the nest is occupied.

Bird nests containing eggs and/or young shall not be disturbed until after the young have left the nest, including swallows nesting on structures and bats using structures for roosting. Design-Builder may take preventive measures ahead of the avian breeding season to ensure that birds do not create nests on structures.

Design-Builder shall notify the Department no fewer than 7 days before removing unoccupied nests.

Design-Builder is responsible for MBTA compliance activities, including but not limited to, bird nesting surveys, establishment and maintenance of nest avoidance areas, bird-nesting preventive measures, or removal of unoccupied swallow nests on structures.

7.6 Cultural Resources

The 2010 ROD identifies mitigation measures Design-Builder shall implement for adverse effects of the Project on historic resources. After issuance of NTP1, Design-Builder shall coordinate with the Department in carrying out the mitigation measures. As part of the mitigation for the demolition of the entire Buena Vista historic district and part of the Glen Heather subdivision, Design-Builder will use Laser Image Detection and Ranging (LiDAR) scanners to record the historic structures in the neighborhoods. The Department has begun the process of scanning the neighborhoods with LiDAR; however, 14 properties remain to be scanned, and remaining scanning shall be performed by Design-Builder. Design-Builder shall coordinate with the Department to identify the locations of the historic properties that must be scanned using LiDAR.

As noted in the 2010 FEIS, no new archaeological resources were identified in the Project area. Archaeological properties previously identified within the Project Area of Potential Effect (APE) have been mitigated as part of earlier Department/FHWA projects or destroyed by nearly 30 years of private residential and commercial development.

If there are any changes to the Project outside of the 2010 FEIS study area, Design-Builder shall contact the Department to decide if additional cultural resources consultation and mitigation is required. See Section 6.11 of the Contract for specific requirements, obligations, and information regarding Governmental Approvals and Environmental Approvals, including any modifications to Governmental Approvals. If, during the design and construction of the Project, any previously unidentified archaeological site is discovered or a previously identified historic property is affected in an unanticipated manner, work within 50 feet around the area shall cease and Design-Builder shall implement appropriate measures to avoid harm. Design-Builder is responsible for ensuring that the FHWA, the Department, the SHPO, Native American Tribes, and other parties deemed appropriate by the FHWA are consulted within 48 hours of the discovery; an onsite evaluation is conducted; and a Treatment Plan(s) is developed as needed. If the find is determined not to be eligible for the National Register of Historic Places (NRHP) by the SHPO, ground-disturbing work may continue. If any archaeological resources are identified during construction monitoring, the find is to be treated in accordance with this stipulation.

7.7 Traffic and Construction Noise

Design-Builder shall reevaluate the final design for traffic noise barriers described in the 2010 FEIS using the Department's forecasts/models. Using the Department's forecasts/models and Design-Builder's reviewed Stage 1 roadway geometric data, Design-Builder shall reevaluate the Project's potential traffic noise impacts. Design-Builder shall evaluate the traffic noise and abatement measure using the most current version of the federal regulations, the *FHWA Highway Traffic Noise Analysis and Abatement Guidance*, and the Department's *Traffic and Construction Noise Analysis and Abatement Policy* in effect as of the Setting Date. Design-Builder shall submit the results of the traffic noise and barrier analysis in a Traffic Noise and Barrier Analysis Report for review and approval by the Department and FHWA.

Following the review and approval of Design-Builder's Traffic Noise and Barrier Analysis Report by the Department and FHWA, Design-Builder shall be responsible for design and construction of all required noise barriers. The design and construction of the traffic noise barriers (referred to also as soundwalls) must adhere to the referenced FHWA guidance and the Department policy, and as found in the NDOT *Soundwall Systems Evaluation Manual*. The structural design of traffic noise barriers shall conform to guidance in Section 13 (*Geotechnical*) and Section 14 (*Structures*), and the materials used to construct the noise barriers must conform to the Department's QPL.

Design-Builder shall coordinate traffic noise barrier construction with the affected subdivisions/homeowner associations and the City of Las Vegas in accordance with the requirements in Section 5 (*Landscape and Aesthetics*). The Department's goal is to limit the number of days between the commencements of the existing noise barrier(s) demolition to when the new noise barrier(s) Construction Work is complete.

At a minimum, Design-Builder shall provide permanent traffic noise barriers (soundwalls) along the west side of the I-15 corridor between the following locations:

- South of Meade Avenue to south of Teddy Drive ("SM3" 699+50 to "SM3" 713+00)
- North of Sahara Avenue to Ellis Avenue ("SA3R" 19+60 to "SA3C" 794+10)
- North of Richard Court to Ellis Avenue ("MLK30" 29+25 to ""CD-S" 793+30)

Permanent noise barriers shall be placed so that properties adjacent to the I-15 corridor are shielded from noise generated by freeway, ramp and collector-distributor road traffic. The height of noise barriers shall be as required by the approved Traffic Noise and Barrier Analysis Report

but in no case shall the top of any permanent noise barrier be lower in elevation than the existing noise barrier at similar location along the I-15 corridor within the Site. Design-Builder shall perform field surveys to record the location of existing noise barriers including elevation and horizontal position (northing and easting coordinates) at top of noise barrier and on the adjacent roadway surface at face of traffic barrier at an interval not to exceed 25 feet. Design-Builder shall submit the noise barrier survey data to the Department for review and obtain Department approval prior to initiating the removal of existing noise barriers.

Noise related to construction activities shall be evaluated and mitigated, as needed, using the FHWA *Construction Noise Handbook* (2006) and other applicable requirements and available references.

7.8 Hazardous Materials

The 2010 FEIS described the results of the 2005 Hazardous Materials investigation. The Department has performed additional Hazardous Material investigations for the Project and it is available through the Reference Information Documents. Design-Builder shall coordinate with the Department about the need to conduct sampling and the Department's protocol for Hazardous Material investigations before beginning any intrusive activities (e.g., Phase 2- or 3-type assessments).

Design-Builder shall coordinate with the owners of an identified Recognized Environmental Condition (REC) and appropriate regulatory agencies to ensure adherence to applicable regulations. Design-Builder, working through the Department and the appropriate regulatory agencies, shall ensure that Hazardous Materials Management at applicable sites prevent soil and or groundwater contamination from entering the Project ROW, as practicable and comply with applicable Government Rules. Other construction areas where Hazardous Materials may be discovered and generated will be assessed by Design-Builder to select management and disposal options, which will include worker and public safety requirements. Design-Builder shall manage and dispose of Hazardous Materials in accordance with the Contract Documents and all applicable Government Rules.

Before disturbance of existing structures, including but not limited to, buildings, bridges, and asbestos cement pipe, such will be assessed by Design-Builder for asbestos and the required abatement measures shall be enforced. Design-Builder shall utilize a Nevada-licensed asbestos abatement consultant and Subcontractor to survey all structures for asbestos-containing material requiring abatement.

Materials shall be removed, packaged, transported and disposed of in accordance with local, state, and federal laws. Design-Builder will provide the Department with survey reports and certification of proper abatement and disposal.

In addition, prior to disturbance of such structures, Design-Builder shall assess as needed for other hazardous constituents (e.g., Resource Conservation and Recovery Act [RCRA] metals, light ballasts) in materials to determine worker and public safety, handling, storage, and disposal requirements according to federal, state, and local regulations.

Design-Builder shall apply the following provisions to the release of Hazardous Materials during the construction of the Project:

- Hazardous Material releases and radiological incidents shall be reported according to local, State, and federal regulations, which may include the Nevada Division of Environmental Protection (NDEP) or other appropriate agency. This shall occur as soon as directed in the appropriate regulation. Additional response actions for releases occurring on the Project site are found in the Department's *Construction Site Best Management Practices (BMPs) Field Manual* (BMP WM-4). Design-Builder shall handle, transport, and dispose of any waste materials generated from this Project which are wastes subject to regulation as hazardous wastes as defined by and in accordance with the Nevada Administrative Code (NAC) 444.8565 according to applicable Environmental Laws governing such handling, transport, and disposal. Design-Builder shall exercise precautions to prevent the discharge of hazardous wastes into the work area, any waterway, or the general environment. Contact the NDEP (775) 687-5872, for specific information and assistance. All Hazardous Materials Management (HMM) of all Hazardous Materials and RECs shall comply with Section 6.10 of the Contract.

7.8.1 Hazardous Materials Management Plan

Design-Builder's ECM shall prepare a Hazardous Materials Management Plan (HMMP), which is a component of the PMP, and submit it to necessary regulatory agencies for review and approval. After receipt of approvals, provide the Department a copy in accordance with Section 25 (*Submittals*). The HMMP shall include the following contents, at a minimum:

- A list of sites along the Project that have a high probability of containing contaminated environmental media
- A list of potential contamination for each identified site
- Responsible personnel
- Spill reporting
- Project and site information
- Potential spill sources
- Spill prevention and response training
- Spill containment
- Spill prevention
- Spill response
- Project site map
- Spill report form(s)

7.8.2 Recycling Nonhazardous Materials

Design-Builder will, to the best of its ability, recycle nonhazardous materials in accordance with USEPA guidelines.

7.9 Submittals

Environmental Submittals shall include, but not be limited to, the documents identified below. Design-Builder shall provide Submittals as set forth in Section 3 (*Design Quality Management*). As a component of the PMP, Design-Builder shall submit the following:

- An ECMP in accordance with Section 1.5 (*Project Management Plan*), Attachment 01-3 (*Project Management Plan*), and Section 7.3 (*Design-Builder's Responsibilities*).
- A comprehensive EQMP that describes how Design-Builder intends to manage the environmental components of the Project in accordance with the requirements of the Contract Documents including Section 7.3 (*Design-Builder's Responsibilities*), the EMS and the ECMP.
- As part of the ECMP, a separate quarterly summary report that compiles and tracks all impacts associated with implementing environmental compliance measures.
- An environmental compliance and mitigation training program for supervisory personnel, including those of Subcontractors who will enter within the Site and Project ROW boundaries to perform Construction Work. The training shall provide supervisory personnel with an understanding of all necessary environmental compliance requirements and any environmental issues for the Project.
- A Hazardous Materials Management Plan (HMMP).

7.9.1 Stage 1 Design

In addition to the required Submittals described in Section 3.9.1 (*Stage 1 Design*), Design-Builder shall submit the following:

- A list of required Governmental Approvals, including Environmental Approvals, to deliver the Project.
- The results of the traffic noise and barrier analysis in a Traffic Noise and Barrier Analysis Report.
- Survey data for existing noise barriers in accordance with Section 7.7.

7.9.2 Released-for-Construction Design

Design-Builder shall submit the following:

- A copy of the issued permits and related documentation for Governmental Approvals.
- Nesting surveys, if required in accordance with Section 7.5.1.4.

8 DRAINAGE

8.1 General

Design-Builder shall conduct all drainage Work to provide the infrastructure improvements as categorized in Section 1.1 (*Project Categories and Limits*), providing for a fully functional drainage system for the Project in accordance with the requirements of this Section 8 and the Project Standards. The Work described in this Section 8 includes the Project drainage system improvements including, but not limited to storm drain systems, inlets, culverts, roadside ditches, open channels, box culverts, water quality, erosion control, outlet protection, and energy dissipaters.

8.2 Standards and References

Design-Builder shall design and construct the drainage Work in accordance with the applicable requirements of the Contract Documents, including the Project Standards shown in Section 26 (*Standards and References*), specific standards defined in this Section 8, Governmental Approvals, and applicable Government Rules.

Refer to Attachment 09-1 (*Freeway Design Criteria*) and Attachment 09-2 (*Arterials, Collectors, and Local Streets Design Criteria*) for a list of the functional classification and ownership for roadways within the Site. Refer to the Las Vegas Valley Master Plan Update for the locations of the CCRFCD drainage facilities within the Site.

The Department's Project Infrastructure drainage facility improvements shall be in accordance with the drainage criteria contained in the NDOT *Drainage Manual*.

The Local Agency Project Infrastructure drainage facility improvements shall be in accordance with the drainage criteria requirements of the CCRFCD *Hydrologic Criteria and Drainage Design Manual*.

Roadways may have joint operations and maintenance responsibilities between the Department and the City of Las Vegas as described in Section 1.1.2 (*Local Agency Project Infrastructure*). The drainage facility improvement Work requirements shall be in accordance with the Department's Standards including the NDOT *Drainage Manual*.

8.3 Design Requirements

Design-Builder shall provide stormwater collection and conveyance facilities designed to safely and efficiently handle stormwater runoff consistent with these Technical Provisions.

Design-Builder shall be responsible for verifying all design requirements, including, but not limited to, the criteria listed in Attachment 08-1 (*Drainage Design Criteria Summary*) and the Project Standards, and use the standards and references appropriate for the design.

The requirements, limitations, and prohibitions applicable to drainage design components are provided in Attachment 08-2 (*Drainage Design Components: Requirements / Limitations / Prohibitions*). The stormwater conveyances include, but are not limited to, storm sewer systems, inlets, deck drains, culverts, roadside ditches, open channels, water quantity and quality, outlet protection, and energy dissipators. Design-Builder shall coordinate with the Department regarding

all Governmental Approval submittals in accordance with Section 7.4.1(*Governmental Approval Submittals)* of these Technical Provisions and Section 3.8.5 of the Contract. The mainline drainage design shall meet freeway design standards specified in the NDOT *Drainage Manual* and Project Standards.

Refer to Section 3.9 (*Design Reviews*) for Design Review requirements.

Design-Builder shall assess any existing facilities that will remain within the Site to determine the suitability for use or necessity for rehabilitation or replacement of the facility as part of Design-Builder's Work, including, but not limited to, considering hydraulic capacity, structural capacity, facility condition, and future compatibility.

Design-Builder shall ensure that the drainage and erosion control design is in accordance with the Project Standards and the requirements of Section 5 (*Landscape and Aesthetics*) and Attachment 05-1 (*Landscape and Aesthetics Requirements*).

Design-Builder shall refer to and comply with the NDOT *Drainage Manual* with respect to acceptable hydrologic and hydraulic modeling software. Design-Builder shall ensure that all software is applied appropriately and used within the assumptions, limitations, intended use, and range of applicability for which the software was developed.

Design-Builder shall design drainage facilities in a manner that will match or improve upon existing drainage and flow conditions with no adverse impacts to adjacent properties or upstream/downstream facilities in accordance with applicable criteria, Nevada drainage law, and good industry and engineering practice.

For the infrastructure improvements as categorized in Section 1.1 (*Project Categories and Limits*), Design-Builder shall submit Design Documents as part of the Design Review process, which present appropriate analysis, including appropriate hydraulic modeling, to show that proposed changes to alignment, cross-section, slope, roughness, or any other physical aspect that could alter either the stormwater-carrying capacity of upstream/downstream water surface elevations, velocities, or flow characteristics, result in conditions that match or improve upon the existing drainage conditions.

8.3.1 Hydrology

Design-Builder is responsible for performing a hydrologic analysis for the Project. The *Preliminary Drainage Design Report for NEON for the P3 Improvements* is included in the RIDs.

Design-Builder shall provide a hydrologic study of the Project tributary area, including all necessary design conditions, based on the hydrologic characteristics of the watershed and review of applicable published hydrology/hydraulic reports that include or influence the Project area. Design-Builder's hydrologic analysis shall be provided in the Drainage Design Report. Information required for the Drainage Design Report is included in Section 8.5 (*Submittals*). Hydrology calculations for offsite watersheds shall be in accordance with the NDOT *Drainage Manual* and/or the CCRFCD *Hydrologic Criteria Drainage Design Manual* (HCDDM), as applicable.

Design-Builder shall use accepted programs or calculations as specified in the NDOT *Drainage Manual* to identify 100-year flow rates to all existing or proposed CCRFCD drainage facilities, to evaluate and mitigate impacts to 100-year flow patterns, and to identify appropriate design storm flow rates for onsite and offsite drainage facilities in accordance with the Department and local

entity criteria contained in the NDOT *Drainage Manual* and CCRFCD HCDDM, respectively. Proprietary or commercial software not on the list included in the NDOT *Drainage Manual* shall be provided to the Department with training, if necessary. Design-Builder shall submit models for the Department's review and determination that calculations are in conformance with these Technical Provisions. Design-Builder shall use the design storm frequency criteria for each type of facility and roadway as indicated in the NDOT *Drainage Manual* or as required by the facility owner's design criteria as appropriate.

The rational method shall be used for the design of onsite Department drainage facilities in accordance with the NDOT *Drainage Manual*. Use of the modified rational method will not be permitted.

8.3.2 Hydraulics

Wherever Project design elements affect existing drainage conditions or performance, Design-Builder shall verify that all existing offsite and onsite drainage facilities to remain in place satisfy current Department drainage criteria, or local entity criteria if applicable. Design-Builder shall upgrade all new or affected existing drainage facilities within the Project ROW to satisfy current Department drainage criteria, except as specifically noted in the *Preliminary Drainage Design Report for NEON for the P3 Improvements*, which is included in the RIDs. Design-Builder shall upgrade all new or impacted drainage facilities within the local entity ROW to satisfy current local entity and CCRFCD drainage criteria. When replacing existing drainage facilities, Design-Builder shall consider and mitigate impacts to upstream and downstream properties according to Good Industry Practice.

Design-Builder shall design and construct the drainage systems to maintain the existing discharge rates at outfalls within the model tolerance of the existing system or demonstrate the ability of the receiving system to accommodate the increased flow in accordance with the NDOT *Drainage Manual* and/or the CCRFCD HCDDM, as applicable.

Design-Builder shall design new outfalls to avoid erosion and maintain upstream and downstream characteristics with respect to the design flows and perpetuate historical drainage conditions. Design-Builder shall mitigate the impact of any proposed flow increases, and verify that there will be no adverse impact of any proposed flow increases to existing upstream and downstream facilities.

Design-Builder shall not allow runoff from the Project ROW to drain to private property unless it is within the established flow path. The design model shall show no increase in peak flow or overall stormwater runoff to private property, unless it is clearly demonstrated that there are no negative impacts to adjacent properties.

Design-Builder shall not create or perpetuate areas on or off the roadway surface where water will pool with no positive drainage outlet, except as allowed in accordance with Attachment 05-1 (*Landscape and Aesthetics Requirements*).

Inlets shall be placed at locations including, but not limited to, the terminals of barrier rail and asphalt dikes to minimize bypass where concentrated flows may cross adjacent travel lanes and before bridge approach slabs to limit flow across the bridge, in accordance with the NDOT *Drainage Manual*.

Design-Builder shall convey roadway surface point discharges to toes of slope or receiving drainage facilities by nonerosive means.

A drop inlet or embankment protector shall be used as the primary form of protection to embankment slopes. A riprap downdrain or other nonerosive form of conveyance may be used as a secondary form of protection for bypass flows.

Underground drainage facilities shall be designed below pavement structural section where possible. If low cover installations are necessary, coordination with pavement design will be required to prevent pavement deficiencies. Design-Builder shall design shallow cover strategies such as Controlled Low Strength Material (CLSM), pavement reinforcing fabric, or other methods to mitigate pavement design and reflective cracking deficiencies.

If necessary to construct or reconstruct drainage facilities under the jurisdiction of a local entity, Design-Builder shall adhere to applicable local entity and CCRFCD drainage criteria.

Design-Builder shall verify that its design will not result in any adverse impacts to established Federal Emergency Management Agency (FEMA) flood zones per FEMA guidelines.

The Department has identified certain exceptions to the Project Standards and design criteria described in this Section 8. The approved exceptions are referred to as “drainage flow spread criteria exceptions” in the *Preliminary Drainage Design Report for NEON for the P3 Improvements*. These exceptions are based on the Reference Design in the RIDs and are for specific locations and specific situations. If Design-Builder’s design for the Project differs from the Reference Design, Design-Builder shall submit a request for Deviation on a case-by-case basis as set forth in Section 3.13 (*Design Exceptions*).

All CCRFCD hydraulic structures shall be modeled using Water Surface Pressure Gradient (WSPG), or other software approved by CCRFCD, with no increase in hydraulic grade line between the existing and proposed systems unless appropriate freeboard is maintained, adverse impacts are avoided, and local entity criteria are met. Trench and slotted drain depths shall be designed to not surcharge at design flow conditions using spatially varied flow equations.

8.3.3 USACE Permits

Portions of the stormwater system within the Project area are subject to permitting under Section 404 of the Clean Water Act. Refer to Section 7.5.1.3 (*Waters of the United States*) for additional discussion and requirements.

8.3.4 Local Agency Project Infrastructure

For the CCRFCD facilities Design-Builder shall submit Design Documents as part of the Design Review process presenting appropriate analysis, including appropriate hydraulic modeling, to show that proposed changes to alignment, cross-section, slope, roughness, or any other physical aspect that could alter either the stormwater-carrying capacity of upstream/downstream water surface elevations, velocities, or flow characteristics result in conditions that match or improve upon the existing drainage conditions.

Primary maintenance access locations for the Local Agency Project Infrastructure facilities shall be outside of the Department’s control of access. The number and size of maintenance access locations for CCRFCD facilities shall be similar to or greater than the maintenance access

locations depicted in the Reference Design. Design-Builder may propose, for the Department's approval, in its good faith discretion, secondary access points for the Local Agency Project Infrastructure facility located within the Department's control of access. If secondary access points are approved by the Department, such access shall have a locking covers.

8.3.5 Pavement Drainage

Design-Builder shall design pavement drainage and inlets in accordance with the NDOT *Drainage Manual* and HEC-22 for the freeway pavement, and in accordance with Project Standards applicable to local entities and local roads. Design-Builder shall not allow runoff to flow from offsite areas onto the freeway roadway surface. Runoff from offsite areas may flow onto local roads only if in accordance with local entity standards and must match existing historical conditions in flood-prone areas.

8.3.6 Inlets

Design-Builder shall design inlets to optimize spacing, interception efficiencies (i.e., bypass at all inlets), ease of maintenance, and spread criteria while adhering to other design criteria, including, but not limited to, maximum pipe length, placement of inlets ahead of super elevation transitions. Inlets within the Department ownership limits, per Attachment 09-1 (*Freeway Design Criteria*) and Attachment 09-2 (*Arterials, Collectors, And Local Streets Design Criteria*), will be designed according to the NDOT *Drainage Manual* requirements. Inlets outside of the Department ownership limits will be designed in accordance with the standards of the entity who will ultimately own and maintain the facility. Design-Builder shall not enter area outside of the Project ROW without written permission of property owner.

Design-Builder shall design drop inlets with minimum clogging factors in accordance with the NDOT *Drainage Manual* requirements. The structural elements of drop inlets and appurtenances shall be composed of structural steel or reinforced concrete. All grates shall be fabricated steel or iron.

Design-Builder shall use multiple drop inlets in series instead of linear drains (trench or slotted). If it is concluded that multiple drop inlets are not possible and linear drains are necessary, linear drains shall have a smooth interior, a minimum invert slope of 4 percent and maintain a self-cleaning velocity of 3 feet per second (ft/s) when half full, be fully encased in concrete, use fabricated steel or iron slots/grates, a minimum depth of 6 inches and have lengths not exceeding 50 feet. Trench drains shall have a minimum internal trench width of 8 inches. Slotted drains shall have a minimum internal diameter of 12 inches (or equivalent). Maintenance access shall be provided at the either end of the linear drain inlet for maintenance and cleaning. Plastic, fiberglass, galvanized steel linear drains, or others are permitted provided the above criteria are met.

Design-Builder shall carefully review and mitigate the potential for hydroplaning at locations of minimal longitudinal grade and/or cross-slope or anywhere along the roadway where there is a tendency for water to accumulate in the travel lanes. Design-Builder shall not locate inlets or manholes in the traveled way. Barrier rail scuppers for permanent roadway surface drainage may be used if requirements shown in Attachment 08-2 (*Drainage Design Components: Requirements / Limitations / Prohibitions*) are met.

Design-Builder shall use pedestrian-friendly drop inlet grates where foot traffic is likely or is expected.

8.3.7 Storm Drain Systems

All storm drain systems must be designed to match or improve upon the existing drainage conditions.

Design-Builder shall refer to the NDOT *Drainage Manual* for storm drain design guidelines, including but not limited to minimum pipe size and material requirements, manhole spacing and location requirements. Design-Builder shall avoid placing trunk lines and laterals under travel lanes. Design-Builder shall design all storm drain systems for gravity flow.

When connecting to an existing storm drain system, Design-Builder shall clearly identify the existing water surface elevations and design standards used for analysis of the facility.

Design-Builder shall construct all storm drain conveyance facilities under major arterials, freeways, or freeway ramps of reinforced concrete. The storm drain conveyance facilities for Local Agency Project Infrastructure shall be reinforced concrete where required by the facility owner. Pipe materials in other locations shall be in accordance with Attachment 08-2 (*Drainage Design Components: Requirements / Limitations / Prohibitions*). Design-Builder shall be consistent with respect to pipe materials used in an individual drainage system. An individual drainage system is generally from the point of origin of flow to a point of major discharge into a CCRFCD facility or open channel. If significant runs of storm drain system occur that are partially located in areas requiring RCP or RCB and partially in other areas where alternative pipe materials may be allowed, transitions from one pipe material to another may be permitted on a case by case basis as long as the transition is made at a logical point such as at a manhole or similar structure. Material transitions midway along a pipe or conveyance between structures will not be allowed. Design-Builder shall indicate pipe materials on the plans.

If drop inlets are used as manholes or junction structures, they shall provide smooth flow transitions, benching, and appropriate maintenance access for the storm drain system.

Placing drop inlets in series or within trunklines is permissible where necessary to simplify the storm drain layout, hydraulics, maintenance and limit the amount of facility necessary to construct.

All existing drainage structures that will no longer be used shall either be removed and backfilled with structure backfill or shall remain in place and be completely filled with flowable backfill, or may be partially removed and backfilled with structure backfill so as not to leave any buried structural voids. All existing drainage structures that are to remain in use within the Site shall be examined and cleaned by Design-Builder. Existing manholes shall be adjusted to finished grade as necessary.

All storm drain outlets shall include outlet protection or energy dissipators to be installed during construction. The design criteria for outlet protection and energy dissipators shall follow the NDOT *Drainage Manual* or CCRFCD criteria as appropriate.

8.3.8 Ditches/Drainage Channels

Design-Builder shall refer to the NDOT *Drainage Manual* or the CCRFCD HCDDM, as applicable, for ditch and channel freeboard requirements. Design-Builder shall design and construct all ditches and channels to avoid conditions conducive to erosion or sediment deposition. Design-Builder shall design all ditches and channels to be accessible by appropriate maintenance equipment. When ditch or channel lining is necessary, Design-Builder shall select an acceptable,

easily maintainable lining material. Design-Builder shall use channel lining other than riprap wherever feasible. Riprap or partially grouted riprap is acceptable only where scour and self-cleaning velocities are present. Partially grouted riprap shall be installed in accordance with HEC-23 design and construction guidance criteria. The use of fully grouted riprap, gabions, and geotextile linings relying on vegetation will not be accepted. Design-Builder shall refer to Section 5 (*Landscape and Aesthetics*) for the other requirements related to ditches and drainage channels.

All roadside ditches and channels shall have proper channel lining installed to ensure stable and erosion-free ditches and channels. Design-Builder shall select the channel lining based on the methodology described in the NDOT *Drainage Manual* or HCDDM, as appropriate.

8.3.9 Culverts/Pipes

Design-Builder shall design and construct all culvert/pipe outfalls to avoid conditions conducive to either erosion or sediment deposition. Design-Builder shall design culvert extensions to the existing culvert grade line where practicable. If it becomes evident that any existing culverts/pipes require replacement or rehabilitation, Design-Builder shall either replace the culvert/pipe or rehabilitate that portion to remain in accordance with the NDOT *Drainage Manual* and FHWA and National Cooperative Highway Research Program (NCHRP) guidelines.

Design-Builder shall construct all storm drain conveyance facilities under major arterials, freeways, or freeway ramps of reinforced concrete. High-density polyethylene (HDPE) pipe may be used for pipe risers, vertical drop shafts, or similar when located in the roadway shoulder and not under the travel lanes. The storm drain pipes for Local Agency Project Infrastructure shall be reinforced concrete where required by the facility owner. Pipe materials in other locations shall be in accordance with Attachment 08-2 (*Drainage Design Components: Requirements / Limitations / Prohibitions*). Design-Builder shall be consistent with respect to pipe materials used in an individual drainage system. An individual drainage system is generally from the point of origin of flow to a point of major discharge into a CCRFCD facility or open channel. If significant runs of storm drain system occur that are partially located in areas requiring RCP or RCB and partially in other areas where alternative pipe materials may be allowed, transitions from one pipe material to another may be permitted on a case by case basis as long as the transition is made at a logical point such as at a manhole or similar structure. Material transitions midway along a pipe or conveyance between structures will not be allowed. Design-Builder shall indicate pipe materials on the plans. Existing culverts may be extended in-kind. Enclosed conveyances with soft or open bottoms are not permitted.

All existing pipes/culverts that will no longer be used shall either be removed and backfilled with structure backfill or shall remain in place and be completely filled with flowable backfill, or may be partially removed and backfilled with structure backfill so as not to leave any buried structural voids. All existing pipes/culverts that are to remain in use within the Site shall be examined and cleaned by Design-Builder.

All culvert outlets shall include outlet protection or energy dissipators to be installed during construction. The design criteria for outlet protection and energy dissipators shall follow the NDOT *Drainage Manual* or CCRFCD criteria as appropriate.

8.3.10 Detention Basins

Detention basins may only be used if all other forms of flood protection and mitigation are not possible. If necessary, detention basins may be constructed in the Project ROW only in locations

where they will not limit, prevent, or impede future facility expansion and must be reviewed and commented on by the Department. Design-Builder shall submit hydrograph or other data/models used to design detention facilities to the Department for review in accordance with the process established in Section 3 (*Design Quality Management*). Design-Builder shall ensure dam safety requirements are met. Placement of emergency spillway must be coordinated with the Department, the relevant local agency, and the Nevada Division of Water Resources Department of Dam Safety. Design-Builder shall include a maintenance road accessing the bottom of the facility in the facility design. Design-Builder shall coordinate with the Department to ensure the maintenance road is designed for the appropriate maintenance vehicle. Detention basin design elements shall conform to Department or CCRFCD/City of Las Vegas requirements as appropriate. Detention basins shall be completely fenced to restrict access. Gates for maintenance access shall be provided. Design-Builder's design of detention basins shall also be in accordance with Section 5 (*Landscape and Aesthetics*) and Section 7 (*Environmental*). Design-Builder shall not use retention basins as a primary method of protection and for reducing peak flow rates. Small retention facilities may be used to facilitate rainwater harvesting for L&A purposes. For design purposes, any retention provided shall be considered ineffective due to back-to-back storms, lack of maintenance, discontinued use of feature, etc., and alternative forms of positive drainage and flood protection shall be provided. Refer to Section 5 (*Landscape and Aesthetics*) for requirements on rainwater harvesting. Detention basins and retention facilities shall be considered Department's Project Infrastructure.

8.3.11 Bridges

Design-Builder shall avoid placement of inlets in bridge approach slabs or bridge decks. Alternative forms of bridge deck drainage (such as scuppers) may be used to minimize bridge deck penetrations and to facilitate design of bridge elements. Bridge deck flows shall be properly collected and routed to appropriate discharge locations in accordance with these Technical Provisions and applicable criteria. Design-Builder shall use only ultraviolet (UV) protected fiberglass-reinforced pipe or steel pipe with 8 inch minimum diameter for exposed bridge storm drain systems.

8.4 Construction

Design-Builder shall be aware that the Site is within an area of active drainage and include large existing flood conveyance facilities. Design-Builder assumes responsibility for protecting and preserving public and private property from damage resulting directly or indirectly from drainage or stormwater runoff along or adjacent to the Project during construction of all improvements, including upstream and downstream properties if the damage is a result of Design-Builder's actions in diverting or redirecting existing runoff patterns. Design-Builder shall store materials in an approved manner and in areas where damage from flood waters is not likely to occur. Design-Builder is advised to coordinate with entities, including but not limited to the Las Vegas Valley Water District (LVVWD) Well Operations Department, at 702-822-8004, for times and anticipated volumes of well discharges or other flow discharges into the upstream channel/storm drain system that could potentially affect drainage in the Project area.

Design-Builder shall consider construction methods and staging during the design phase and include provisions to maintain positive drainage at all times during construction.

Design-Builder shall not place fill or in any way decrease conveyance capacity of stormwater flow paths without first installing conveyance, either temporary or permanent, to adequately perpetuate the flows in a historical manner and condition. Design-Builder shall maintain this conveyance for all existing flow areas and temporary and permanent conveyance facilities constructed as part of

this Project. Design-Builder shall include necessary upstream collection facilities and extend the conveyance system downstream to a reasonable outfall location. Design-Builder shall not divert flows from historical patterns until downstream facilities, either temporary or permanent, are in place to safely convey flows to an acceptable outfall location.

Design-Builder shall sequence construction of drainage features, including but not limited to drop inlets, lateral connections, storm drains, channels, and reinforced concrete boxes, so they can be connected to their appropriate outfall to convey flows as designed. If construction of the outfall cannot be completed before direct connection of upstream drainage features, Design-Builder shall provide temporary flow conveyance. Design-Builder assumes full responsibility for any flood damage or impacts created as a result of the Project's design, Construction Work, and incomplete facilities.

Design-Builder shall install temporary erosion control measures on disturbed areas as soon as practicable. Design-Builder shall treat all flows from disturbed areas using BMPs in accordance with the Department's *Stormwater Quality Manuals: Construction Site Best Management Practices (BMPs) Manual*. Design-Builder is responsible for obtaining all necessary permits for diverting/discharging of surface water and groundwater on the project. All surface water and groundwater must be diverted/discharged in accordance with the appropriate local agency and Department regulations.

8.4.1 Water Quality

Design-Builder shall be responsible for ensuring that runoff from the Project is collected and routed in accordance with Section 7 (*Environmental*).

8.4.2 Erosion Control

8.4.2.1 Erosion Control Plans

Design-Builder shall be responsible for developing Erosion and Sediment Control Plans (ESCPs) for all earth-disturbing activities and the restoration of areas used for temporary impacts, including staging areas. The ESCPs shall be developed in conjunction with Released-for-Construction Design Documents and Construction Documents. The ESCPs shall be created to satisfy all requirements presented in the Department's Standard Specifications, construction operations-related water quality manuals, Stormwater General Permit NVR100000, and the Contract Documents, and shall be submitted to the appropriate authorities and the Department as required by these references. The ESCPs shall incorporate any pertinent information from Section 1 (*General Scope of Work*) and Section 7 (*Environmental*). A SWPPP must be developed and implemented before any earth-disturbing activities begin. The ESCPs shall be amended if any revisions to the ESCPs take place during construction. The amended ESCPs shall be resubmitted to the appropriate authorities and the Department as described in the abovementioned design standards, specifications, and Governmental Approvals.

Design-Builder shall designate one or more employees as Water Pollution Control Supervisor(s), who will be supervised by the Environmental Compliance Manager (ECM). The Water Pollution Control Supervisor(s) are responsible for assisting the ECM to make sure the requirements of the approved ESCP and SWPPP are met.

8.4.3 Permanent Erosion Protection

For permanent erosion protection requirements, refer to the NDOT *Stormwater Quality Manuals: Planning and Design Guide* and *Construction Site Best Management Practices (BMPs) Manual.* Design-Builder shall provide permanent erosion control measures for all disturbed soil areas. Permanent erosion protection must meet the final stabilization requirements of the construction stormwater permit. Design-Builder shall coordinate the erosion control design with Section 5 (*Landscape and Aesthetics*) and Attachment 05-1 (*Landscape and Aesthetics Requirements*). Soil stabilizer is not an acceptable alternative.

8.4.4 Stormwater Pollution Prevention Plan

Design-Builder shall prepare and implement an SWPPP, including an ESCP. Design-Builder shall inspect and maintain BMPs to ensure effective performance of the SWPPP. Refer to the Department's *Stormwater Quality Manuals* for guidance.

8.5 Submittals

Submittals will include, as a minimum, the documents identified below for each stage of design development. Design-Builder shall provide submittals as set forth in Section 3 (*Design Quality Management*). In addition, Submittals will include, but are not limited to, the Design Documents identified below and in this Section 8.5 for each stage of design development.

8.5.1 Stage 1 Design

In addition to the required Submittals described in Section 3.9.1 (*Stage 1 Design*), Design-Builder shall submit the following:

- Drainage Design Report

As part of the Stage 1 Design, Design-Builder shall submit six hard copies and electronic copies of a Drainage Design Report describing drainage design criteria, including, but not limited to, methods, special situations, and divergences from design criteria or the provided preliminary design information. The Drainage Design Report shall follow the requirements and format of the Preliminary design submittal level according to the NDOT *Drainage Manual*. Design-Builder shall make ongoing drainage design calculations, assumptions, and decisions available for oversight review by the Department, the City of Las Vegas, and the CCRFCD to verify conformance with these specifications and accepted engineering practice.

8.5.2 Stage 2 Design

In addition to the required Submittals described in Section 3.9.2 (*Stage 2 Design*), Design-Builder shall submit the following at Stage 2 Design:

- Final Drainage Design Report
- Dam design submittal (if applicable)

At Stage 2 Design, Design-Builder shall prepare and submit six hard copies and electronic copies of a final Drainage Design Report documenting the entire drainage design (including, but not limited to, assumptions, calculations, and special circumstances). The format and contents of the

final Drainage Design Report shall be in accordance with the guidance provided in the NDOT *Drainage Manual*.

Design-Builder shall provide electronic and hard copies of reports, calculations, and software data files. Design-Builder shall develop drainage plans and construction notes according to the format guidance provided in the NDOT *Drainage Manual*.

Design-Builder shall prepare and submit a dam design submittal (if applicable) to the Department and the Nevada Division of Water Resources Department of Dam Safety. All requirements shall be followed for Nevada Division of Water Resources submittals. The appropriate number of copies shall be submitted as required by the impacted entities (minimum of six copies).

8.5.3 Released-for-Construction Design

In addition to the required Submittals described in Section 3.9.3 (*Released-for-Construction Design*), Design-Builder shall submit the following:

- Final Drainage Design Report supplement

Design-Builder shall prepare and submit six hard copies and three CDs of a final Drainage Design Report supplement documenting any drainage design elements that were updated between Stage 2 and Released-for-Construction Design reviews. The final Drainage Design Report supplement shall include, but not be limited to, assumptions, calculations, and special circumstances. The format and contents of the final Drainage Design Report supplement shall be in accordance with the guidance provided in the NDOT *Drainage Manual*.

8.5.4 Final Design

The Design Review of the Final Design shall be conducted in accordance with Section 3.9.4 (*Final Design*).

8.5.5 Working Drawings

The working drawings shall be submitted in accordance with Section 3.10 (*Working Drawings*).

8.5.6 Record Drawings

The Record Drawings shall be submitted in accordance with Section 3.11 (*Record Drawings*).

This page intentionally left blank.

9 ROADWAY

9.1 General

Design-Builder shall perform all of the highway and roadway Work to provide the infrastructure improvements as categorized in Section 1.1 (*Project Categories and Limits*) for the Project, in accordance with the requirements of this Section 9 and the Project Standards, providing for a high-quality, aesthetic, durable, and maintainable facility; improving mobility and safety for the public, maintaining stakeholders trust, and upholding the Department's integrity. The Work described in this Section 9 includes the infrastructure related to roadway design and construction, grading, barriers, curbs, sidewalks, railings, roadside safety devices, fences, temporary features, and other necessary roadway facilities.

9.2 Standards and References

Design-Builder shall design and construct the roadway Work in accordance with the applicable requirements of the Contract Documents, including Project Standards shown in Section 26 (*Standards and References*), specific provisions defined in this Section 9, Governmental Approvals, and applicable Government Rules.

9.3 Design Requirements

9.3.1 Roadway Design Requirements

The design Work required under this Section 9 shall meet or exceed the requirements of the Project Standards and criteria defined in Attachment 09-1 *(Freeway Design Criteria)* and Attachment 09-2 *(Arterials, Collectors, and Local Streets Design Criteria)*, with the exclusion of the roadway design exceptions described in Section 9.3.5 (*Design Exceptions*) and Attachment 09-3 *(Design Exceptions and Deviations)*.

9.3.2 Freeway

The Work for the Department's Project Infrastructure includes the freeway system as described in this Section 9. The Reference Design drawings included in the RIDs depict the general intent for the freeway system configuration of the Project. The freeway system infrastructure improvements include mainline general-purpose lanes, auxiliary lanes, HOV lanes, access locations (entrance and exit ramps), and collector-distributor roadways to provide overall functionality of the system. Design-Builder's freeway configuration shall provide the number of general-purpose lanes, auxiliary lanes, access locations (entrance and exit ramps), and collector distributor roadways to comply with both the Project's traffic operational performance requirements as set forth in Section 11.3 *(Traffic Operations [Design] Requirements)* and the minimums set forth in this Section 9. All freeway ramp terminal intersection configurations shall provide the number of travel lanes, including through lanes, turn lanes, and necessary lane storage lengths necessary to comply with both the Project's traffic operational performance requirements as set forth in Section 11.3 (*Traffic Operations [Design] Requirements*) and the minimums set forth in this Section 9.

9.3.2.1 I-15 Freeway

Design-Builder shall perform Work for the following Department's Project Infrastructure for the I-15 freeway system improvements:

1. Provide a minimum of four general-purpose lanes in the southbound direction of travel on I-15, extending from approximately 2,400 feet south of Sahara Avenue ("MS" 714+00) and continuing northerly for approximately 2,900 feet ("MS" 743+00). Provide a minimum of four general-purpose lanes in the northbound direction of travel on I-15, extending from approximately 1,000 feet south of Sahara Avenue ("MN" 727+00) and continuing northerly for approximately 10,600 feet ("MN" 833+00). Transition the southbound and northbound general-purpose lanes to conform to the alignment, number, and width of the existing I-15 lanes at the southerly limit.

   Provide a minimum of three general-purpose lanes in the southbound direction of travel on I-15, extending from approximately 500 feet north of Sahara Avenue ("MS" 743+00), continuing northerly, and ending at the US 95/I-515 undercrossing bridge ("MS" 859+50). Provide a minimum of three general-purpose lanes in the northbound direction of travel on I-15, extending from approximately 500 feet north of Alta Drive ("MN" 833+00), continuing northerly, and ending at the US 95/I-515 undercrossing bridge ("MN" 859+50). Transition the southbound and northbound mainline lanes to conform to the alignment, number, and width of the existing I-15 lanes at the northerly limit.

   The I-15 mainline roadway shall be grade-separated over Sahara Avenue, Oakey Boulevard, Charleston Boulevard, Alta Drive, Symphony Parkway, and US 95/I-515. The I-15 mainline roadway shall also be grade-separated over the Martin Luther King Boulevard to I-515 eastbound and US 95 eastbound to I-15 northbound ramps. Northbound I-15 will be grade-separated over the new Neon Gateway roadway, which will provide access to the I-15 HOV facility.

2. Provide direct access from I-15 southbound to Charleston Boulevard. Provide direct access from I-15 southbound to Sahara Avenue, including the two existing eastbound flyover ramps and westbound ramp. A minimum two-lane exit ramp shall be provided at each location. The new ramps shall be grade-separated over Oakey Boulevard, Charleston Boulevard, and Alta Drive as necessary.

3. The southbound I-15 shall transition to conform to the alignment, number, and width of the existing US 95/I-515 interchange westbound-to-southbound direct connector ramp. A minimum of two lanes shall be provided and extend southerly as auxiliary lanes providing access to Charleston Boulevard and Sahara Avenue.

4. Provide direct access from Sahara Avenue to I-15 southbound conform to the alignment, number, and width of the existing Sahara Avenue two-lane entrance ramp and to the existing I-15 southbound lanes. Provide direct access from Charleston Boulevard to I-15 southbound, extending the lanes southerly to comply with the Project's traffic operational performance requirements.

5. Provide access for eastbound US 95 and local streets to I-15 southbound, Charleston Boulevard, and Sahara Avenue by developing a new southbound collector-distributor system (CDS). The southern terminus of the CDS shall connect and transition with southbound I-15, before the Sahara Avenue Bridge undercrossing. The northern terminus

of the CDS shall connect to the existing US 95 eastbound-to-southbound ramp and the Martin Luther King Boulevard-to-southbound ramp that currently provide direct access to I-15. A minimum of two lanes shall be provided from the US 95 eastbound-to-southbound ramp. Provide access from the Martin Luther King Boulevard-to-southbound ramp. A minimum of two lanes shall be provided for the CDS and extend southerly to the Charleston Boulevard exit ramp. A minimum of two lanes shall be provided for the CDS south of the Charleston Boulevard exit.

The new southbound CDS shall be grade-separated over Oakey Boulevard, Charleston Boulevard, Alta Drive, and Symphony Parkway. The southbound CDS shall also be grade-separated over the Martin Luther King Boulevard-to-I-515 eastbound and US 95 eastbound-to-I-15 northbound ramps.

The minimum number of access locations is listed as follows:

a. Access from the Martin Luther King Boulevard/Alta Drive intersection to the CDS. The new intersection shall be signalized.

b. Direct access from the CDS to Charleston Boulevard to eliminate conflicting traffic movements with southbound I-15, and traffic accessing Charleston Boulevard.

c. Access from the CDS ramp to the Sahara Avenue southbound ramp, allowing access to eastbound and westbound Sahara Avenue. Eliminate conflicting traffic movements with southbound I-15.

6. Provide direct access from Sahara Avenue to I-15 northbound conform to the alignment, number, and width of the existing Sahara Avenue three-lane entrance ramp. A minimum of one lane shall be provided and extend northerly as an auxiliary lane providing access to Charleston Boulevard, I-515 eastbound, US 95 westbound, and Martin Luther King Boulevard. Provide additional auxiliary lanes and ramp lanes to comply with the Project's traffic operational performance requirements as set forth in Section 11.3 (Traffic Operations [Design] Requirements).

7. Provide direct access from I-15 northbound to Charleston Boulevard. A minimum two-lane exit ramp shall be provided. The new ramp shall be grade-separated over the new Neon Gateway Street. The new Charleston Boulevard ramp intersection shall be signalized. Provide direct access from Charleston Boulevard to I-15 northbound. Provide ramp lanes and auxiliary lanes necessary to comply with the Project's traffic operational performance requirements as set forth in Section 11.3 (Traffic Operations [Design] Requirements).

8. Provide access from I-15 northbound to Bonneville Avenue/Alta Drive. The ramp shall not conflict with the Charleston entrance or exit ramps. The new ramp intersection shall be signalized.

9. Provide access from I-15 northbound to Grand Central Parkway/Iron Horse Drive. No direct access from the Grand Central Parkway/Iron Horse Drive intersection onto I-15 will be allowed.

10. Provide direct access from I-15 northbound to the existing US 95 westbound and Martin Luther King Boulevard connector ramps. Transition the lanes to conform to the alignment, number, and width of the existing ramps. A minimum two-lane exit ramp shall be provided. The ramp shall be grade-separated over Bonneville Avenue, Symphony Parkway, and

US 95/I-515. In addition, the ramp shall be grade-separated over the Martin Luther King Boulevard-to-I-515 eastbound and US 95 eastbound-to-I-15 northbound ramps.

11. Provide direct access from I-15 northbound to the existing I-515 eastbound connector ramp. A minimum two-lane exit ramp shall be provided. The ramp shall be grade-separated over Symphony Parkway and US 95/I-515.

12. The freeway system pavement design shall be in accordance with Section 10 (*Pavement*).

13. Replace existing Bridges I-938, G-941, and I-937including demolition and reconstruction to provide for Department's Project Infrastructure and future improvements as defined in Attachment 09-4 (*Bridge Replacements I-937, I-938, G-941, and I-945*).

9.3.2.2 US 95/I-515 Freeway

Design-Builder shall perform the Work for the following Department's Project Infrastructure for the US 95/I-515 freeway system improvements:

1. The US 95/I-515 freeway system improvements begin approximately 1,000 feet west of the Rancho Drive undercrossing ("L" 1204+00), continuing easterly and terminating approximately 300 feet east of the US 95/I-515 interchange ("L" 1134+00). US 95/I-515 shall be grade-separated over Rancho Drive and Martin Luther King Boulevard. The median width will vary to accommodate the proposed HOV lanes, the HOV direct connector, and other connecting roadway approaches. See Section 9.3.3 *(High-Occupancy Vehicle Lanes)* for the HOV system improvements.

2. Provide a minimum of three general-purpose lanes in the westbound direction of travel for US 95/I-515. Provide a minimum of one auxiliary lane between the existing I-15-southbound-to-westbound-US 95 entrance ramp and the Rancho Drive westbound exit ramp. Transition the westbound mainline lanes to conform to the alignment, number, and width of the existing US 95/I-515 lanes.

3. Provide a minimum of two general-purpose lanes in the eastbound direction of travel for US 95/I-515. Provide direct access from the eastbound US 95 HOV system to the US 95/I-515; at least one lane shall be added to eastbound US 95/I-515 and continue easterly, terminating just east of the I-15 overcrossing. Provide a minimum of one auxiliary lane between the existing Rancho Drive eastbound US 95 entrance ramp and the Rancho Drive eastbound-to-northbound I-15 exit ramp. Provide direct access from eastbound US 95/I-515 to northbound I-15. Provide ramp lanes and auxiliary lanes necessary to comply with the Project's traffic operational performance requirements as set forth in Section 11.3 (*Traffic Operations [Design] Requirements*).

4. Provide direct access from the existing Martin Luther King Boulevard and US 95 intersection to northbound I-15 and eastbound US 95/I-515. Provide ramp lanes and auxiliary lanes necessary to comply with the Project's traffic operational performance requirements as set forth in Section 11.3 (*Traffic Operations [Design] Requirements*).

5. Maintain the existing ramp access, including the number of existing lanes and lengths, from westbound US 95 to Rancho Drive and the existing ramp access from Rancho Drive to eastbound US 95.

6. Maintain the existing eastbound US 95-to-southbound-I-15 connector ramp, including the number of existing lanes and lengths connecting to the newly proposed CDS described above. Maintain the existing Martin Luther King Boulevard exit ramp from the connector.

7. Provide direct access from Rancho Drive to eastbound US 95 and direct access from US 95 westbound to Rancho Drive. Transition and conform to the alignment, number, and width of the existing Rancho Drive entrance and exit ramps.

8. Maintain the existing Rancho Drive ramp access to the existing eastbound-US 95-to-southbound-I-15 connector ramp and to the existing Martin Luther King Boulevard exit ramp.

9. Maintain the existing eastbound Martin Luther King Boulevard entrance ramp connecting to the newly proposed CDS described above, including the number of existing lanes and lengths.

10. Maintain the existing I-15 northbound-to-westbound US 95 connector ramp access, including the number of existing lanes, lane lengths, and additional existing ramp access connections.

11. Maintain the existing I-15 southbound access to US 95/I-515, including the number of existing lanes, lane lengths, and additional existing ramp access connections.

12. Provide the freeway system pavement design in accordance with Section 10 (*Pavement*).

13. Replace the existing Bridge I-945 which crosses over Martin Luther King Boulevard, including demolition and reconstruction to provide for Department's Project Infrastructure and future improvements as defined in Attachment 09-4 (*Bridge Replacements I-937, I-938, G-941, and I-945*).

9.3.2.3 I-15 Freeway Future Improvements

The I-15 Freeway Future Improvements provide for the planned ultimate build-out of the I-15 freeway system by the Department. The RID titled *Exhibit 2, I-15 Freeway Future Improvement*, illustrates the general limits of the future freeway system improvements. The Project Neon–Future Phase Preliminary Design included in the RIDs convey the general intent of the future freeway system infrastructure and includes but is not limited to the following.

1. Five general-purpose lanes in the southbound direction of travel on I-15 extending from approximately 2,400 feet south of Sahara Avenue ("MS" 714+00) and continuing south approximately 2,300 feet ("MS" 691+00). The five general-purpose lanes may be extended southerly as part of long-range freeway expansion planning. Transition the five southbound general-purpose lanes and auxiliary lanes to conform to the alignment, number, and width of the existing I-15 lanes approximately 7,100 feet south of Sahara Avenue ("MS" 667+00). Provide four general-purpose lanes in the southbound direction of travel on I-15 extending from approximately 2,000 feet south of Sahara Avenue ("MS" 718+00) and continuing northerly for approximately 5,400 feet ("MS" 772+00) Oakey Boulevard grade separation. Match the alignment, number, and width of the Project's four southbound general-purpose lanes and auxiliary lanes. Two HOV lanes in the southbound direction of travel on I-15 extending from approximately 5,300 feet south of Sahara Avenue ("MS" 685+00) and continuing northerly for approximately 8,700 feet ("MS" 772+00) Oakey Boulevard grade separation. Match the alignment, number, and width of the Project's four southbound general-purpose lanes and auxiliary lanes.

2. Direct access from Sahara Avenue to I-15 southbound with a two-lane entrance ramp. Provide a two-lane exit ramp from I-15 southbound to Spring Mountain Road. Grade separate the Sahara Avenue southbound entrance and Spring Mountain Road exit ramps.

3. Five general-purpose lanes in the northbound direction of travel on I-15 extending from approximately 5,300 feet south of Sahara Avenue ("MS" 685+00) and continuing northerly for approximately 3,500 feet ("MS" 720+00). Transition the northbound general-purpose lanes and auxiliary lanes to conform to the alignment, number, and width of the existing I-15 lanes south of ("MS 685+00). Beginning approximately 1,700 feet south of Sahara Avenue ("MS" 720+00) provide a minimum of three general-purpose lanes and two auxiliary lanes. Realign the northbound I-15 lanes to avoid impacting the existing Sahara Avenue eastbound exit ramp fly-over bridge structure. Provide a new northbound I-15 bridge crossing over Sahara Avenue with a minimum of five lanes.

4. Access from I-15 northbound to Alta Drive, US 95 westbound, and Martin Luther King Boulevard by developing a new northbound CDS. The southern terminus of the CDS shall connect and transition with northbound I-15, north of the Sahara Avenue Bridge undercrossing.

5. Direct access from I-15 northbound to Sahara Avenue with a minimum of a two-lane exit ramp.

6. Direct access from Sahara Avenue to I-15 northbound with a minimum of a two-lane entrance ramp.

7. Direct access from I-15 northbound to Charleston Boulevard with a minimum of a two-lane exit ramp.

8. Direct access from Sahara Avenue to US 95 westbound and Martin Luther King Boulevard.

9. Direct access from Charleston Boulevard to US 95 westbound and Martin Luther King Boulevard.

10. Two HOV lanes in the northbound direction of travel on I-15 extending from approximately 5,300 feet south of Sahara Avenue ("MS" 685+00) and continuing northerly for approximately 8,700 feet ("MS" 772+00) to the Oakey Boulevard grade separation. Match the alignment, number, and width of the Project's two northbound HOV lanes.

11. Entrance ramp configuration design shall accommodate ramp metering lanes.

The Department has developed a preliminary list of design exceptions specific to the I-15 Freeway Future Improvements, included in the RID. If Design-Builder elects to modify the design for the Project and Design-Builder's design results in modifications of the Reference Design or Project Neon-Future Phase Preliminary Design, such design modifications shall comply with the standards shown in Attachment 09-1 *(Freeway Design Criteria)* and shall be submitted in accordance with Section 9.5.1 (*Stage 1 Design*) a preliminary design exception memorandum documenting Design-Builder's proposed design exceptions for the I-15 Freeway Future Improvements.

If Design-Builder elects to modify the I-15 Freeway Future Improvements including the number and length of general-purpose lanes, ramp lanes, auxiliary lanes, and intersection configurations, Design-Builder's design shall comply with these Technical Provisions and the Project's traffic

operational performance requirements as set forth in Section 11.3 (*Traffic Operations [Design] Requirements*).

If Design-Builder elects to modify the Future Improvement Phases infrastructure, Design-Builder's design shall be located within the Project ROW or Future Improvement Phases ROW as set forth in Section 1.2.2.1 (*Future Improvement Compatibility*).

If Design-Builder elects to modify the design for the Project and Design-Builder's design results in modifications of the Reference Design or Project Neon-Future Phase Preliminary Design, Design-Builder shall demonstrate the future improvement compatibility as set forth in Section 1.2.2 (*Future Improvement Phases*). In addition Design-Builder shall submit Design Documents demonstrating such compliance including but not limited allowance for and accommodation of to the design requirements described in this Section 9.3.2.3.

9.3.3 High-Occupancy Vehicle Lanes

Design-Builder shall perform the Work for the Department's Project Infrastructure for the US 95/I-15 HOV system as described in this Section 9.3.3.

US 95/I-15 HOV lane improvements shall provide for new HOV lanes in the medians of US 95 and I-15. The HOV lanes are connected by an HOV direct connector elevated structure that provides directional travel for northbound I-15 to westbound US 95 and eastbound US 95 to southbound I-15.

Design-Builder shall design and construct the following:

1. Convert existing express lanes to HOV lanes between Silverado Ranch Boulevard Interchange ("Le" 245+00) and CC-215 Beltway Interchange. Modify existing express lanes to a HOV lane and a general purpose lane in each direction from CC-215 Beltway Interchange to the southerly freeway system limits on I-15 ("MS" 714+00). The segment of these improvements extending from Silverado Ranch Boulevard to Spring Mountain Road shall be categorized as Department's Project Infrastructure.

2. Provide one HOV lane in the southbound direction of travel on I-15, extending from approximately 2,400 feet south of Sahara Avenue ("MS" 714+00) and continuing northerly for approximately 2,900 feet ("MS" 743+00). Provide one HOV lane in the northbound direction of travel on I-15, extending from approximately 2,400 feet south of Sahara Avenue ("MN" 714+00) and continuing northerly for approximately 1,300 feet ("MN" 727+00). Transition the southbound HOV lanes to conform to the alignment, number, and width of the existing I-15 lanes. The northbound HOV lanes shall conform to the alignment, number, and width of the existing I-15 lanes.

3. Provide two HOV lanes in the southbound direction of travel on I-15, extending from approximately 500 feet north of Sahara Avenue ("MS" 743+00) and continuing northerly to approximately 2,800 feet north of Charleston Boulevard ("MS" 829+00). Provide two HOV lanes in the northbound direction of travel on I-15, extending from approximately 1,100 feet south of Sahara Avenue ("MN" 727+00) and continuing northerly to approximately 2,100 feet north of Charleston Boulevard ("MN 822+00). Transition the southbound and northbound HOV lanes from two lanes to one lane to conform at approximately "MS" 755+00 and "MN" 727+00, respectively. The HOV lanes shall be

separated with a buffer to restrict access from the adjoining general-purpose lanes. The opposing HOV lanes shall be barrier separated.

4. Between Charleston Boulevard and the US 95/I-515 Interchange, provide a southbound I-15 direct access entrance ramp to the southbound HOV lanes; and provide a northbound direct access exit ramp to northbound I-15 from the northbound HOV lanes.

5. Provide a new direct HOV connector between I-15 and US 95 HOV systems, comprising one lane in each direction of travel. The connection ends approximately 700 feet east of Rancho Drive ("MC" 1185+00). Provide a direct access from the eastbound US 95 HOV system to US 95 mainline. Transition the HOV lanes to conform to the alignment, number, and width of the existing US 95 lanes west of the Rancho Drive interchange. Restrict access to the HOV lanes east of Rancho Drive with pavement markings in accordance with Project standards. The minimum horizontal clearance width between the face of barriers for the direct HOV connector shall be 28.5 feet in each direction.

6. Where the HOV direct connector bridge structure is located within the US 95 median, provide concrete barrier along US 95 separating the US 95 roadway from the median beneath the bridge. Provide a break in the median barrier along the westbound US 95 to allow for maintenance access.

7. Provide a new direct local street connection (Neon Gateway) to allow direct access to and from the northbound and southbound I-15 HOV system to Western Avenue, between Oakey Boulevard and Charleston Boulevard. The connection shall include the following:

   a. Single-lane entrance and exit ramps in each direction of travel to access I-15 HOV lanes. The southbound and northbound exit ramps for the Neon Gateway intersection shall be signalized. Traffic queuing within 600 feet of the ramp's painted nose is prohibited. The intersection configuration shall provide the number of turn lanes and necessary lane storage lengths to comply with the Project's traffic operational performance requirements as set forth in Section 11.3 (*Traffic Operations [Design] Requirements*).

   b. The new Neon Gateway/Western Avenue intersection shall be signalized. The intersection configuration shall provide the number of turn lanes and necessary lane storage lengths to comply with the Project's traffic operational performance requirements as set forth in Section 11.3 (*Traffic Operations [Design] Requirements*). Dedicated right-turn lanes shall be provided from Neon Gateway to Western Avenue and from Neon Gateway to the northbound I-15 HOV system.

   c. The Neon Gateway/ramp intersection and Neon Gateway/Western intersection shall be designed to accommodate the Regional Transportation Commission Articulated Bus design vehicle.

8. Provide the HOV system pavement design in accordance with Section 10 (*Pavement*).

9.3.4 Local Infrastructure

The Work includes the design and construction, reconstruction and closure of Local Agency Project Infrastructure and the Department's Project Infrastructure. The intended configuration for these arterial, collector, and local roadways is depicted in the Reference Design drawings

included in the RID, conveying the general intent of the Local Agency Project Infrastructure and the Department's Project Infrastructure Project improvements as defined in the following:

1. Local roadway limits: The approximate limits of local roadway improvements are depicted in *Exhibit 1 "General Work Limits*" included in the RID.

2. Geometric roadway alignments: The horizontal and vertical alignments for the local roadways may be changed from what is shown in the Reference Design drawings included in the RID, unless otherwise prohibited by these Technical Provisions or other provisions of the Contract Documents. However, implementation of the proposed change must be achievable within the Project ROW or in accordance with Section 21.1 (*Project ROW*).

3. Number of lanes: The minimum number of general-purpose (through) lanes shall be the number depicted in the Reference Design drawings included in the RIDs.

4. Intersections: The intersection configurations for the local roadways depicted in the Reference Design drawings included in the RIDs may be changed from what is shown in the RID unless otherwise prohibited by these Technical Provisions or other provisions of the Contract Documents. The minimum number of intersection turn lanes and necessary lane storage lengths shall be as depicted in the Reference Design drawings included in the RID. Design-Builder may propose modifications to the number of turn lanes and lane storage lengths during the Stage 1 Design development for review and comment by the Department, if the modifications comply with the Project's traffic operational performance requirements as set forth in Section 11.3 (*Traffic Operations [Design] Requirements*). Intersection traffic signalization requirements are set forth in Section 15 (*Signals and Lighting*).

5. The general location of the required local roadway connections and access to the freeway system is depicted in the Reference Design drawings included in the RID.

6. The general location and limits of new bicycle and pedestrian improvements is depicted in the Reference Design drawings included in the RID. In addition, all bicycle and pedestrian facilities shall comply with the requirements and other Contract Documents.

7. The general location and number of bus turn-outs shall be provided as depicted in the Reference Design drawings included in the RID.

8. The general locations of specific driveway relocations shall be as depicted in the Reference Design drawings included in the RID. In addition, new driveway approaches shall be provided to all existing driveway accesses, unless otherwise indicated in these Technical Provisions and the Contract Documents.

In addition to complying with the elements set forth above, the local roadway design shall comply with the standards shown in Attachment 09-2 (*Arterials, Collectors, and Local Streets Design Criteria*). The following items are also part of the local roadway requirements for the Work.

- State Route 159/Charleston Boulevard: Provide PCC median islands to separate eastbound and westbound lanes. Provide sidewalk configuration adjacent to the eastbound lanes in accordance with the City of Las Vegas *Downtown Centennial Standards*. The sidewalk configuration shall include a 5-foot amenity zone and 10-foot PCC sidewalk.

- Martin Luther King Boulevard: The roadway shall be grade-separated over Charleston Boulevard. The outside shoulder width for the overcrossing bridge structure shall be a minimum of 8 feet. Pedestrian access may be prohibited across the overcrossing bridge structure. Provide PCC median islands to separate northbound and southbound lanes. Provide a connection from the southbound lanes to Charleston Boulevard ("Desert Lane Martin Luther King Boulevard Slip Ramp") allowing for a right turn only movement onto westbound Charleston Boulevard including access to Hasting Avenue. Provide a direct connection from the eastbound lanes of Charleston Blvd to Martin Luther King Blvd (MLK) which provides a left turn onto MLK at a minimum. As specified in Section 5 (*Landscape and Aesthetics*), provide median islands to accommodate landscaping. Provide sidewalk configurations in accordance with the City of Las Vegas *Downtown Centennial Standards*, including all connecting roadways. The sidewalk configuration shall include a 5-foot amenity zone and 10-foot PCC sidewalk.

- Grand Central Industrial Connector (GCI): Industrial Road shall be connected to Grand Central Parkway with an Overhead Structure crossing the Railroad right-of-way. As specified in Section 5 (*Landscape and Aesthetics*), provide median islands to accommodate landscaping. Provide sidewalk configurations in accordance with the City of Las Vegas *Downtown Centennial Standards*. The sidewalk configuration shall include a 5-foot amenity zone and 10-foot PCC sidewalk. Provide a new traffic signal at the Grand Central/Western/Industrial intersection.

- Oakey Boulevard: Provide PCC median islands to separate eastbound and westbound lanes, extending from the Martin Luther King Boulevard intersection and ending at the Western Avenue intersection.

- Alta Drive: Provide driveway access to the World Market Center from the new ramp intersection with Alta Drive. The control of access requirements will be modified by the Department. Design and install signing to restrict public access to the driveway. A new traffic signal improvement is planned by others at the existing Premium Outlet Mall entrance; coordinate the Alta Drive design with these planned improvements. Provide PCC median islands to separate eastbound and westbound lanes.

- Pavement Surface: Where pavement marking Work is to be constructed, Design-Builder shall mill the existing pavement to a depth of ¾ inch and construct a ¾-inch ultra-thin asphalt concrete surface (UTACS) across the roadway as set forth in Section 10 (*Pavement*). The milling and pavement Work shall be for the full width of the roadway between the two curbs. The limits of the milling and pavement Work at intersecting roadways shall be to the curb return of the intersecting roadway.

9.3.4.1 Local Future Improvements

The Local Future Improvements provides for the planned ultimate build-out of the Project's local street network in the area by the City of Las Vegas and the Department. The RID titled *Exhibit 2, I-15 Freeway Future Improvement*, illustrates the general limits of the Local Future Improvements infrastructure. The Project Neon – Future Phase Preliminary Design included in the RID conveys the general intent of the future local roadway improvements.

If Design-Builder elects to modify the Department's proposed design for the Local Future Improvements, Design-Builder's design shall comply with the standards shown in Attachment 09-2 (*Arterials, Collectors, and Local Streets Design Criteria*). If Design-Builder elects to modify the design for the Project and Design-Builder's design results in modifications of the

Reference Design or Project Neon-Future Phase Preliminary Design, Design-Builder shall demonstrate the future improvement compatibility as set forth in Section 1.2.2 (*Future Improvement Phases*). In addition Design-Builder shall submit Design Documents demonstrating such compliance including but not limited allowance for and accommodation of to the following design requirements:

1. The horizontal and vertical alignments for the future local roadways may be changed from what is shown in the Project Neon – Future Phase Preliminary Design included in the RID. However, implementation of the proposed change must be achievable within the Project ROW or Future Improvement Phases ROW as set forth in Section 1.2.2.1 (*Future Improvement Compatibility*).

2. The minimum number of general-purpose (through) lanes for the future local roadways shall be the number depicted in the Project Neon – Future Phase Preliminary Design included in the RID. Design-Builder may propose modifications to the number of turn lanes and lane storage lengths if the modifications comply with the Project's traffic operational performance requirements as set forth in Section 11.3 (*Traffic Operations [Design] Requirements*).

3. The intersection configurations for the future local roadways depicted in the Project Neon – Future Phase Preliminary Design included in the RID may be changed from what is shown in the RID. The minimum number of intersection turn lanes and necessary lane storage lengths shall be as depicted in the Project Neon – Future Phase Preliminary Design. Design-Builder may propose modifications to the number of turn lanes and lane storage lengths if the modifications comply with the Project's traffic operational performance requirements as set forth in Section 11.3 (*Traffic Operations [Design] Requirements*).

4. The general location and limits of new bicycle and pedestrian improvements is depicted in the Project Neon – Future Phase Preliminary Design included in the RID. In addition, all bicycle and pedestrian facilities shall comply with the requirements and other Contract Documents.

5. The general location and number of bus turn-outs shall be provided as depicted in the Project Neon – Future Phase Preliminary Design included in the RID.

6. The general locations of specific driveway relocations are depicted in the Project Neon – Future Phase Preliminary Design included in the RID.

7. The Department has no approved preliminary design exceptions or Deviations for the Local Future Improvements. If Design-Builder elects to modify the design for the Project and Design-Builder's design results in modifications of the Reference Design or Project Neon-Future Phase Preliminary Design, Design-Builder shall submit in accordance with Section 9.5.1 (*Stage 1 Design*) a preliminary design exception memorandum documenting Design-Builder's proposed design exceptions or Deviations for the Local Future Improvements.

9.3.5 Design Exceptions

Through its preliminary design process, the Department has accepted certain design exceptions and deviations to the Project Standards and design criteria for Design Work described in this section, which are included in Attachment 09-3 *(Design Exceptions and Deviations)*. These

exceptions and deviations are based on the preliminary roadway concept illustrated in the Reference Design drawings included in the RID and are for specific locations and specific situations. If Design-Builder's design for the Project differs from the Reference Design but continues to use the specific design exceptions or deviation, Design-Builder shall obtain written approval from the Department and FHWA for any proposed change.

Design-Builder may request additional design exceptions and deviations on a case-by-case basis. Design-Builder shall obtain written approval from the Department and FHWA for any proposed design exception or deviation as set forth in Section 3.13 (*Design Exceptions*).

9.3.6 Transit Facilities

Design-Builder shall provide bus turn-outs at the approximate locations depicted in the Reference Design drawings included in the RID. Design and construction of bus turn-outs shall be in accordance with the *Uniform Standard Drawings for Public Works' Construction, Off-Site Improvements, Clark County Area, Nevada*, including but not limited to turn-out, shelter pad, shelter, signing, lighting, and other improvements.

Design-Builder shall provide bus rapid transit lanes that maintains the existing movements through the Grand Central Parkway and Iron Horse Drive roadways. Design-Builder shall design the Western Avenue and Grand Central Parkway new connection to accommodate two future bus rapid transit lanes. The future lanes will cross Charleston Boulevard through an at-grade intersection. Design-Builder shall provide a minimum 40-foot-wide median, extending from 450 feet south of Charleston Boulevard and continuing to Iron Horse Drive Intersection. Design-Builder shall transition the bus rapid transit lanes to connect to the existing facilities.

9.3.7 Bicycle and Pedestrian Work

Design-Builder shall design and construct all bicycle and pedestrian infrastructure Work for the Project as set forth in these Technical Provisions, including Attachment 09-2 (*Arterials, Collectors, and Local Streets Design Criteria*). Design-Builder shall ensure the bicycle and pedestrian infrastructure Work of this Project supports the Department's commitment to integrating bicycle and pedestrian travel into Project development. Design-Builder shall coordinate with all affected Governmental Entities to maintain consistency with existing and proposed bicycle and pedestrian infrastructure Work.

9.3.7.1 Bicycle Facilities

Design-Builder's Work and infrastructure shall be consistent with the region's bicycle and pedestrian plan and accommodate existing bicycle paths and crossings, and on-street bicycle facilities. Design-Builder's facilities shall meet the requirements as defined in Attachment 09-2 (*Arterials, Collectors, and Local Streets Design Criteria*) and as applicable to AASHTO's *A Guide for the Development of Bicycle Facilities* and shall incorporate the following elements relating to bicycle facilities into the Project design:

1. Alignment, profile, cross-section, and materials
2. Points of connection to existing and proposed bicycle facilities
3. Signing, signalization, and pavement markings
4. Methods of illumination, where applicable

9.3.7.2 Pedestrian Facilities

Design-Builder shall design, construct, and perform maintenance in accordance with Section 20 (*Maintenance Requirements*) during the Construction Work of sidewalks along the roadways where sidewalks currently exist and where required by applicable Government Rules. Design-Builder shall install pedestrian signals and curb ramps at all existing and proposed signalized intersections. All pedestrian facilities shall be designed to incorporate ambulatory, visibility, and auditory needs of all users and shall include the following elements relating to pedestrian facilities:

1. Alignment, profile, cross-section, and materials
2. Points of connection to existing and proposed pedestrian facilities
3. Signing, signalization, and pavement markings
4. Separation between pedestrian facilities and the nearest travel lane
5. Methods of illumination, where applicable
6. Aesthetics and landscaping requirements in accordance with Section 5 (*Landscape and Aesthetics*)

9.3.7.3 Americans with Disabilities Act

Design-Builder shall submit Design Documents for review and comment by the Department, demonstrating that the Project complies with all applicable ADA/PROWAG requirements.

Where curb ramps are to be removed and reconstructed, construct and maintain an alternate ADA-compliant pedestrian access route at all times. Backfill all drop-offs at excavations for the curb ramps with aggregate base or place a physical barrier to protect the public if the concrete is not replaced the same day. Additional criteria regarding ADA requirements (ADAAG vs. PROWAG) are as follows:

1. All new construction of roadways or pedestrian facilities shall follow PROWAG.
2. Existing pedestrian facilities (curb ramps, sidewalks) when reconstructed for any reason, shall follow PROWAG.
3. As part of the Project, existing curb ramps that meet 1991 ADAAG guidelines may be left in place. Existing curb ramps that do not meet 1991 standards must be replaced as part of the Project and shall follow PROWAG.
4. As part of the Project, existing sidewalk meeting 1991 ADAAG standards may be left in place. Sidewalk/driveways that do not meet 1991 standards shall be constructed to current PROWAG standards.

9.3.8 Miscellaneous Roadway Design Requirements

Ramp Meters: Design-Builder shall provide the necessary number of lanes and configuration to provide for ramp metering systems at the locations listed in Section 19.9 (*Ramp Meters*). The configurations shall allow enforcement control area. Lane lengths shall provide the necessary vehicle storage to comply with the Project's traffic operational performance requirements as set forth in Section 11.3 (*Traffic Operations [Design] Requirements*).

Horizontal Clearance: The lateral offset to the face of an obstruction adjacent to the back of sidewalks, including bridge abutments, columns, barriers, retaining walls, soundwalls, fences,

signs, and other obstructions, shall be a minimum of 2 feet. The lateral offset to the face of an obstruction adjacent to the back of median curb shall be a minimum of 6 feet. Where obstructions are within this lateral offset, provide roadside safety devices in accordance with Project Standards.

Safety Devices: All roadside safety devices used on the Project shall meet current crash test and other safety requirements in accordance with Project Standards.

Driveways: All driveways adjacent to City of Las Vegas roadways shall be designed and constructed in accordance with the requirements of Section 1.2.1 (*Local Infrastructure*) and Section 26 *(Standards and References)*. Driveways adjacent to the Department's roadways shall be designed and constructed in accordance with the Department's Standard Plans.

Roadside Design Including Barrier Rail/Guardrail: The roadside for all newly constructed facilities, as well as for all altered facilities, shall be constructed and brought into conformance with the Project Standards and this Section 9.

a. As a minimum, provide concrete barrier rail Type FA, FB (3 feet 6 inches high), or FD as appropriate, for all roadside barriers at locations on high-speed roadways where the posted speed limit (or 85th percentile speed) is greater than or equal to 55 mph, and directional traffic volume is higher than 25,000 ADT. Concrete barrier rail shall meet TL-4 specifications. Type A (2 feet 8 inches high) concrete barrier may be used at locations to accommodate sight distance requirements as set forth in Attachment 09-3 (*Design Exceptions and Deviations*). For all other locations Type A (2 feet 8 inches high) concrete barrier shall be used and meet TL-3 specifications. Metal Guardrail shall only be used for terminal applications.

b. Crash attenuators shall be SCI Smart Cushions (SCI100GM), at "high speed, high volume, and high crash potential locations," defined as follows:

    - Locations on high-speed roadways where the posted speed limit (or 85th percentile speed) is greater than or equal to 55 mph, and directional traffic volume is higher than 25,000 ADT.

- Locations with a frequent crash history or expectation of multiple impacts per year, or sites with repair time limitations (that is, the location requires immediate repair including during night time), or locations 10 feet (or less) off the traveled way, and gore locations. Associated crash history information can be requested at the following http://www.nevadadot.com/About_NDOT/NDOT_Divisions/Planning/Safety_Engineering/Traffic_Crash_Reports.aspx.

    - New construction or alterations where there is no crash history, but with similar geometry or conditions as locations meeting the above criteria

c. Temporary concrete barrier rail or precast concrete barrier rail shall not be allowed in a permanent condition.

d. Design-Builder shall divide the freeway with concrete median barrier.

e. Where a barrier wall is needed to retain slopes, provide the same face shape for the barrier wall as for the concrete barrier rail to provide proper redirection of errant vehicles.

f. Provide impact attenuators and rail end treatments listed on the Department's QPL.

g. For all runs of guardrail and barrier rail to be replaced, the entire run of the rail shall be replaced (and brought up to current Project Standards), except as indicated in Section 14.3.2.6 (*Railings*), even if the rail extends outside the proposed improvement limits, such as along ramps, cross roads, etc. Guardrail shall be treated with desert varnish stain in accordance with Section 5 *(Landscape and Aesthetics)*. Barrier rail shall be painted or stained in accordance with Section 5 (*Landscape and Aesthetics*).

h. Where existing barriers are to be replaced, remove only as much barrier as can be replaced during the same shift or protect the area with portable precast concrete barrier rail.

9.3.9 Control of Access

Design-Builder shall use the ROW Plans to establish ROW, easements, permission to construct, and control of access limits. Design-Builder shall maintain all accesses defined in the Project ROW and shall not revise control of access without the Department's review and comments. Design-Builder shall maintain all existing property accesses until permanent access construction is complete.

To restrict access to the freeway system, provide a new 6-foot fence in accordance with Section 5.3.12 (*Fencing*), ROW Plans, and Project Standards. Retaining walls and soundwalls may be located along the control of access shown in the ROW Plans. The height of these walls shall be a minimum of 6 feet to restrict access to the freeway system. Should the control of access location require modifications based on concepts proposed by Design-Builder, provide walls or fencing to restrict access as defined in this section.

Control access to the freeway system by maintaining fence at all times throughout the Project until permanent walls and fencing are completed.

9.3.10 Change-In-Access

A preliminary Change-In-Access Report for the Project has been approved by the Department and FHWA. A copy of this report is provided with the RIDs.

The change in access approval applies only to the configuration depicted and described in the preliminary Change-in-Access Report. The completion and submittal for the Department and FHWA approval of the formal Change-In-Access Report shall be the responsibility of Design-Builder in accordance with the Department and FHWA polices for access to the interstate system.

Design-Builder may propose deviations from the preliminary Change-In-Access Report; however, there are no assurances that a revised configuration will be approved by the Department. Design-Builder shall submit full and clear documentation and obtain the Department and FHWA approval of any proposed change in access. Design-Builder shall bear risks of any costs and delays associated with a revised interchange configuration and subsequent formal Change-In-Access Report proposed by Design-Builder.

9.4 Construction Requirements

Construction of the roadway improvements shall comply with the Project Standards, the requirements of the Contract Documents, including this Section 9, Governmental Approvals, and applicable Government Rules.

9.4.1 General

Design-Builder shall provide erosion control and Site protection treatments for all areas where clearing or grubbing is performed as set forth in Section 8.3.14 (*Erosion Control*).

Heavy earth-moving equipment, excavators, cranes, or pile-driving equipment may not cross over existing bridges with axle loads heavier than normally allowed on the freeways.

Design-Builder shall construct new roadway pavement and or rehabilitate the existing pavement as set forth in Section 10 (*Pavement*). Where pavement Construction Work is required, perform maintenance in accordance with Section 20 (*Maintenance Requirements*) for the existing curbs, sidewalks, driveway approaches, and other features adjacent to the side of the roadway.

9.5 Submittals

Submittals will include, as a minimum, the documents identified below for each stage of design development. Design-Builder shall provide Submittals as set forth in Section 3 (*Design Quality Management*). In addition, Submittals will include, but are not limited to, the Design Documents identified below and in this Section 9 for each stage of roadway design development.

9.5.1 Stage 1 Design

In addition to the required Submittals described in Section 3.9.1 (*Stage 1 Design*), Design-Builder shall submit the following:

- Preliminary design exception requests
- Future Improvement Phases compatibility – Design Documents
- Road safety audit

As part of Stage 1 Design Future Improvement Phases compatibility Design Documents, Design-Builder shall prepare preliminary Design Work and preliminary Plans showing the transition from the existing infrastructure, Department's Project Infrastructure, and Local Agency Project Infrastructure for the Future Improvement Phases. At a minimum, Design-Builder shall submit the following:

1. Plan view:
    - Alignments and alignment names
    - Alignment tangent and curve data
    - Grading limits
    - Retaining walls
    - Soundwalls
    - Barrier rail
    - Guardrail terminals
    - Bridge rail
    - Structures
    - Lane and shoulder widths
    - Horizontal clearances
    - ROW (line and easement)

2. Profiles for each alignment, including:
   - Profiles grades
   - Superelevation diagrams
   - Vertical clearances
   - Vertical curves: begin and end curve station, length, and stopping sight distance
3. Typical cross-section for each alignment:
   - Widths and slopes of each roadway element
   - Maximum slopes for tie-ins
   - Alignment name, location, and stationing on the cross-section
   - Location where profile grade is applied
4. Other preliminary Design Documents
   - Traffic operations documentation
   - Preliminary design exception or deviation memorandum
   - Sequence of construction plan
   - Preliminary traffic control plan
   - Bridge layouts (type of bridge and front sheet)

9.5.2 Stage 2 Design

In addition to the required Submittals described in Section 3.9.2 (*Stage 2 Design*), submit the following:

- Design exception requests
- Geometric approval request memorandum
- Road safety audit

Submit design calculations for all proposed and temporary roadways, including the following:

- Horizontal sight distance (mainline, ramps, and secondary roads)
- Vertical sight distance
- Intersection sight distance
- Intersection geometrics (including vehicle turning movements)
- Superelevation calculations
- Clear zone calculations and curve adjustments
- Length of need calculations for roadside safety

9.5.3 Released-for-Construction Design

In addition to the required Submittals described in Section 3.9.3 (*Released-for-Construction Design*), submit the following:

- Final design exception report including all of the Department's review and comments addressed and reconciled by Design-Builder.
- Final control of access report including all of the Department's review and comments addressed and reconciled by Design-Builder.
- Road safety audit

9.5.4 Final Design

Refer to Section 3.9.4 (*Final Design*).

9.5.5 Working Drawings

Refer to Section 3.10 (*Working Drawings*).

9.5.6 Record Drawings

Refer to Section 3.11 (*Record Drawings*).

10 PAVEMENT

10.1 General

Design-Builder shall perform all pavement Work for the pavement infrastructure improvements as categorized in Section 1.1 (*Project Categories and Limits*), for the Project, in accordance with the requirements of this Section 10 (*Pavement*) and the Project Standards to provide high-quality, durable, and maintainable pavements, improve safety for the public, maintain stakeholders' trust, and uphold the Department's integrity.

Pavement sections for the mainline freeway and for all ramps and roadways will be provided in this Section 10 (*Pavement*).

The price Proposal shall not include an oil escalation cost or factor for bituminous material.

10.2 Standards and References

Design-Builder shall construct the pavement Work in accordance with the applicable requirements of the Contract Documents, including the Project Standards shown in Section 26 (*Standards and References*), specific standards defined in this Section 10 (*Pavement*), Governmental Approvals, and applicable Government Rules.

Rubberized asphalt pavement materials and construction shall be in accordance with Attachment 10-1 (*Asphalt Concrete Friction Course*). Rubberized asphalt pavement is only required in the areas shown in Table 10-1A and is optional in all other areas.

10.3 Requirements

The minimum limits for pavement reconstruction on I-15 and US 95 shall be as follows:

- Design-Builder shall reconstruct the pavement section over the full width of I-15 in accordance with Table 10-1A from the north edge of the approach slab(s) at Bridge H-933 N/S (I-15 over Oakey Blvd) to the south edge of the approach slab(s) at Bridge I-937 (I-15 over US 95).

- At any location on I-15 that is beyond the limits noted above and where I-15 will be widened or expanded, Design-Builder shall reconstruct the pavement section in accordance with Table 10-1A over the full width of the facility.

- Design-Builder shall reconstruct the pavement section over the full width of US 95 in accordance with Table 10-1A between I-15 and the east edge of the approach slab(s) at Bridge I-945 (US 95 over MLK Blvd).

- West of the approach slab(s) at Bridge I-945 (US 95 over MLK Blvd), at locations where US 95 will be widened or expanded or where existing pavement is removed and replaced in any portion of the roadway cross section, Design Builder shall reconstruct the pavement section over the full width of US 95 in accordance with Table 10-1A.

Where US 95 is not widened or expanded and where existing pavement has not been removed and replaced west of the approach slab(s) at Bridge I-945 (US 95 over MLK Blvd), Design Builder shall mill and overlay the pavement over the full width of US 95 in accordance with Table 10-1A.

In addition, to facilitate the conversion of express lanes to HOV lanes on I-15 between Silverado Ranch Blvd and approximately station “MS” 714+00 north of Sahara Ave, Design-Builder shall mill and overlay the pavement as indicated in Table 10-1A. The mill and overlay width shall extend from the median barrier to the inside mainline travel lane edge strip in both the northbound and southbound directions.

10.3.1 Final Pavement Surface

Design-Builder shall provide a final pavement surface free from residual temporary striping or evidence of temporary striping removal efforts (ghost striping). If such residual striping or ghost striping is present on the final pavement surface prior to acceptance, Design-Builder shall remove the residual striping or ghost striping by approved methods. Approved methods for bridge decks and approach slabs include shot blasting and water blasting. The approved method for PCC pavement surfaces is to place a 1-inch thickness rubberized asphalt overlay on the full width of the roadway. The approved method for PBS dense grade pavement surfaces is to place a 3/4-inch thickness open grade on the full width of the roadway. The approved method for PBS open grade pavement surfaces is to mill 1 inch and place 1-inch thickness open grade on the full width of the roadway. Design-Builder shall plan and construct bridge decks, approach slabs and roadway pavement sections such that the final approved pavement surface is flush with the riding surface on bridge decks and approach slabs.

10.3.2 Subgrade Requirements for Pavements

Pavement subgrade preparation, improvements, and testing shall be conducted in accordance with the Department’s Standard Specifications and the Project Standards defined in Section 26 (*Standards and References*).

If unsuitable material is encountered within the pavement subgrade, the unsuitable material shall be removed to a depth to be determined by Design-Builder’s geotechnical engineer and as approved by the Department. Removal of, and mitigation for, unsuitable material within the pavement subgrade will be considered a Differing Site Condition and governed by Contract Section 13.9.1. Clearing and grubbing material removal, excavation to reach proposed pavement subgrade elevation, and onsite soil improvement to increase soil strength and reduce settlement under embankments shall not be considered a Differing Site Condition.

Design-Builder shall excavate unsuitable pavement subgrade material without operating equipment directly on the subgrade and in a manner that does not disturb the subgrade surface. A smooth, toothless bucket shall be used to remove excavated material from the subgrade surface. Remaining loosened material shall be removed with hand tools.

Areas of the pavement subgrade requiring overexcavation to remove unsuitable material and which receive geotextile, geogrid, and drain backfill do not require compaction prior to the placement of geotextile, geogrid, and drain backfill.

Pavement subgrade areas that do not receive geotextile, geogrid, and drain backfill require 90 percent compaction. The compacted areas must be able to support a fully loaded dump truck, specifically a 10,000-lb single-wheel load (20,000-lb axial load), without rutting. Equipment with heavier wheel loads shall not be used and shall be kept off the subgrade.

Geotextile materials shall conform to Section 731.03.03 of the Department’s Standard Specifications.

Geogrid materials shall conform to Section 731.03.04 of the Department's Standard Specifications.

If natural in-place moisture at the bottom of excavation makes it impractical to compact the soil, the soil shall be moisture conditioned by aeration or other approved means. If, in the judgment of the Design-Builder's geotechnical engineer and the Department, moisture conditioning or other approved means do not produce satisfactory results, remove material and place stabilizing materials as follows:

1. Overexcavate below the pavement subgrade to a depth determined by Design-Builder's geotechnical engineer and approved by the Department.

2. Place nonwoven geotextile on excavated surface.

3. Place geogrid over the nonwoven geotextile.

4. Replace overexcavated material with Type 1 drain backfill having 100 percent fractured faces, tested in accordance with test method Nev. T230.

Design-Builder shall prepare the surface area beneath the geotextile prior to laying the geotextile. The geotextile surface shall be level and free of deleterious materials, including loose or lightly compacted soils.

Design-Builder shall not drive vehicles or construction equipment directly on the geotextile or geogrid. A minimum 8-inch lift of overlying material shall be placed on top of the geogrid before operating vehicles or construction equipment over the geogrid. Construction vehicles shall not make sudden breaking or sharp turning movements on the first lift of material placed on top of the geogrid.

The geogrid shall be installed in accordance with the manufacturer's recommendations. Prior to installing the geogrid, Design-Builder shall arrange a meeting at the site with the geogrid supplier and the geogrid installer. A representative from the manufacturer with geogrid installation experience shall be onsite on the first day of geogrid installation and observe installation operations for a minimum of 4 hours.

Design-Builder shall place the geogrid continuously in strips. Place only the amount of geogrid needed for immediate pending work to prevent geogrid damage. Roll the geogrid out along the alignment in the direction of advancing construction at all locations to the limits directed by Design-Builder's geotechnical engineer and as approved by the Department. Overlap the sides of adjacent geogrid rolls a minimum of 12 inches. Overlap the geogrid roll ends a minimum of 12 inches with the roll end closest to the fill to be spread on top. The geogrid shall be tensioned by hand.

Design-Builder shall ensure that geogrid sections do not separate at overlaps during construction. Placement of geogrid around corners shall require cutting the geogrid and diagonal overlapping. Prevent the geogrid from buckling or becoming slack as fill is placed. Any displaced or damaged geogrid shall be replaced or repaired by Design-Builder.

If mixing is necessary, Design-Builder shall mix the overlying lift of material prior to placement. During placement of drain backfill, the distance the drain backfill material is allowed to drop freely onto the geogrid shall not exceed 3 feet.

10.3.3 Specified Pavement Designs

The Department has elected to provide the Design-Builder with the plantmix bituminous surface (PBS) and Portland cement concrete pavement (PCCP) sections that the Department has determined are appropriate for the Project. Accordingly, the pavement design sections indicated in Table 10-1 and Table 10-1A for PBS and PCCP are to be used for preparing the Technical and Price Proposals and for Construction.

Design-Builder shall construct the specified improvements for the Local Agency Project Infrastructure listed in Table 10-1 and for the Department's Project Infrastructure in Table 10-1A. The pavements for the roadways shown in Table 10-1 and Table 10-1A shall be constructed in accordance with the requirements of the Department's Standard Specifications. Plant-mix open graded surfacing (PMOGS) and ultra-thin asphalt concrete surfacing (UTACS) for Local Agency Project Infrastructure shall meet the requirements of Attachment 10-2.

Design-Builder shall provide approach slabs at bridge abutments and coordinate the pavement structural sections with roadway profiles to ensure that the minimum vertical clearance requirements are provided as specified in Section 14 (*Structures*).

Design-Builder shall construct a keyed joint between existing and new flexible pavement sections. To form the keyed joint, the old pavement section shall be cold milled 6 inches in width and 3 inches in depth and filled with new PBS to match the existing section.

Design-Builder shall locate any longitudinal joints in pavements relative to final traffic lane lines in accordance with Department's Standard Specifications.

Design-Builder shall prime coat the surface of the aggregate base under PBS in accordance with the Contract Documents.

Table 10-1 Specified Pavement Designs
Local Agency Project Infrastructure

Route	Designation	Location	Improvement	Notes
Martin Luther King (MLK) Blvd	Arterial	Alta to Hastings	1 inch UTACS on 5.5 inches PBS on 4 inches Type II Base on 19.5 inches Type I Subbase	1
MLK Blvd	Arterial	Hastings to Oakey	1 inch UTACS on 5.5 inches PBS on 4 inches Type II Base on 19.5 inches Type I Subbase	1
MLK Blvd_CH Ramp	Minor Collector	MLK Blvd to Charleston	3.5 inches PBS on 4 inches Type I Base on 7.5 inches Type II Base where new section is required.	2
Hastings	Residential	MLK Blvd/Hastings	Mill 1 inch and replace with 1 inch PBS	
Pinto Lane	Residential	MLK Blvd/Pinto	3 inches PBS on 4 inches Type II Base on 6 inches Type I Subbase	2

Table 10-1 Specified Pavement Designs
Local Agency Project Infrastructure

Route	Designation	Location	Improvement	Notes
Ellis	Residential	MLK Blvd/Ellis	3 inches PBS on 4 inches Type II Base on 6 inches Type I Subbase	2
New Desert Lane Connection	Residential	MLK Blvd/New Desert Lane Connection	3 inches PBS on 4 inches Type II Base on 6 inches Type I Subbase	2
Beardon Drive	Residential	MLK Blvd/Beardon	3 inches PBS on 4 inches Type II Base on 6 inches Type I Subbase	2
Oakey Blvd	Oakey	MLK Blvd to I-15 Overpass	2.5 inches Mill and replace with 1 inch UTACS on 1.5 inches PBS; 1 inch UTACS on 5.5 inches PBS on 4 inches Type II Base on 19.5 inches Type I Subbase where new section is required	1
Silver Avenue Cul-de-Sac	Residential	East of Westwood Drive	3 inches PBS on 4 inches Type II Base on 6 inches Type I Subbase	2
Alta	Arterial	Desert Lane to MLK	Mill 2.5 inches and replace with 2.5 inches PBS	
Bonneville	Arterial	East side of I-15 to Grand Central (GC) Parkway	Mill 2 inches and replace with 2 inches PBS; 1 inch UTACS on 5.5 inches PBS on 4 inches Type II Base on 19.5 inches Type I Subbase where new section is required under existing median	1
Bonneville	Arterial	MLK to east side of I-15	1 inch UTACS on 5.5 inches PBS on 4 inches Type II Base on 19.5 inches Type I Subbase	1
GC/Western	Arterial	Oakey to “AR”	2.5 inches Mill and replace with 1 inch UTACS on 1.5 inches PBS	
GC/Western	Arterial	“AR” to Charleston	1 inch UTACS on 5.5 inches PBS on 4 inches Type II Base on 19.5 inches Type I Subbase	1
GC/Western	Arterial	Charleston to Iron Horse Loop	1 inch UTACS on 5.5 inches PBS on 4 inches Type II Base on 19.5 inches Type I Subbase	1
Wall Street	Residential	Wall St/GC-IND	3 inches PBS on 4 inches Type II Base on 6 inches Type I Subbase	2

Table 10-1 Specified Pavement Designs
Local Agency Project Infrastructure

Route	Designation	Location	Improvement	Notes
Iron Horse Loop	Minor Collector	GC/Iron Horse Loop	Mill 2 inches and replace with 2 inches PBS; 3.5 inches PBS on 4 inches Type I Base on 7.5 inches Type II Base where new section is required.	2

1. Pavement section based on Clark County Uniform Standard Drawing 200 for heavy traffic and R-value of 16. Design-Builder shall confirm and verify R-value and adjust section as necessary.
2. Pavement section based on Clark County Uniform Standard Drawing 200.1 for heavy traffic and R-value of 16. Design-Builder shall confirm and verify R-value and adjust section as necessary.

Table 10-1A Specified Pavement Designs
Department's Project Infrastructure

Route(s)	Designation	Location	Improvement Option 1	Improvement Option 2
I-15 SB I-15 NB	Freeway - general purpose lanes Freeway - general purpose lanes	2,400 feet south of Sahara Ave to US 95/I-515 1,000 feet south of Sahara Ave to US 95/I-515	1 inch rubberized asphalt overlay on 12 inches PCCP on 3 inches PBS on 6 inches AB	N/A
I-15 SB I-15 NB	Freeway - HOV lanes Freeway - HOV lanes	2,400 feet south of Sahara Ave to 2,800 feet north of Charleston Blvd 2,400 feet south of Sahara Ave to 2,100 feet north of Charleston Blvd	1 inch rubberized asphalt overlay on 10 inches PCCP on 3 inches PBS on 6 inches AB	N/A

Table 10-1A Specified Pavement Designs
Department's Project Infrastructure

Route(s)	Designation	Location	Improvement Option 1	Improvement Option 2
I-15 SB	Ramps	I-15 SB to Charleston Blvd Charleston Blvd to I-15 SB I-15 SB to Sahara Ave	3/4-inch PMOGS on 7 1/2 inches PBS on 12 inches AB on geotextile	1 inch rubberized asphalt overlay on 9 inches PCCP on 3 inches PBS on 6 inches AB
I-15 NB	Ramps	I-15 NB to Charleston Blvd Charleston Blvd to I-15 NB I-15 NB to Bonneville Ave/ Alta Dr I-15 NB to Grand Central Pkwy/ Iron Horse Loop		
C/D Road	Collector/ Distributer	US 95 EB, Charleston Blvd and Sahara Ave to I-15 SB		
US 95 WB	Freeway (reconstruct, Notes 1 and 2)	I-15 to leading edge of approach slab at Bridge I-945 over MLK and trailing edge of approach slab at Bridge I-945 to 1,000 feet west of Rancho Drive	3/4-inch PMOGS on 7 inches PBS on 24 inches AB Or 12 inches PCCP on 4 inches PBS on 6 inches AB	N/A
US 95 EB	Freeway (reconstruct, Notes 1 and 2)	Rancho Drive to leading edge of approach slab at Bridge I-945 over MLK and trailing edge of approach slab at Bridge I-945 to I-15		

Table 10-1A Specified Pavement Designs
Department's Project Infrastructure

Route(s)	Designation	Location	Improvement Option 1	Improvement Option 2
US 95 WB US 95 EB	Freeway (mill and overlay, Note 1) Freeway (mill and overlay, Note 1)	Trailing edge of approach slab at Bridge I-945 over MLK to 1,000 feet west of Rancho Drive Rancho Drive to leading edge of approach slab at Bridge I-945 over MLK	2 3/4-inch mill, overlay with 3/4-inch PMOGS on 2 inches PBS	N/A
Charleston Blvd	Arterial		3/4-inch PMOGS on 7 1/2 inches PBS on 12 inches AB on geotextile on 24 inches borrow (R=45)	N/A
Sahara Ave	Arterial		3/4-inch PMOGS on 9 1/2 inches PBS on 6 inches Type II Base	N/A
I-15 Express to HOV lane conversion I-15 Express to HOV lane conversion	Freeway – HOV lane Freeway – HOV lane	"Le" 275+00 to "Le" 450+00 "Le" 450+00 to "MS" 714+00	1 inch mill and 1 inch PBOGS overlay to eliminate all existing permanent and temporary traffic lane markings that do not match the final striping configuration	N/A

1. Refer to Section 10.3 (*Requirements*) for additional reconstruct and mill and overlay requirements on US 95.
2. Design-builder shall use the improvement section that matches the adjacent existing pavement at each location of the Work.

For the purposes of this Section 10 (*Pavement*), the word "lanes" shall mean all travel lanes, auxiliary lanes, passing lanes, deceleration lanes, and any other pavement on which traffic may normally travel. The word "shoulders" shall mean inside and outside shoulders and gore areas. Ramps shall be considered to start at the theoretical back of the gore.

Design-Builder shall construct pavement shoulders with the same structural section as the adjacent pavement in the travel lanes. The use of high early strength concrete will not be permitted. Dowel bars are required for all transverse joints, while tie bars are required for all longitudinal joints as shown in the standard plans and as described in the Contract Documents.

If widening roadways, Design-Builder shall use the same pavement type as the existing pavement.

10.3.4 Temporary Pavement

Temporary pavements shall not be used for more than 2 years during the Construction Work. Design-Builder shall design, construct, and maintain all temporary pavements in compliance with the requirements of the Contract Documents and the following performance requirements:

- Provide documentation describing the assumptions used to design the temporary pavement. At a minimum, the documentation shall include design life and anticipated traffic loading for each temporary pavement location.

10.4 Not Used

10.5 Submittals

Design-Builder shall provide submittals as set forth in Section 3 (*Design Quality Management*).

10.5.1 Stage 1 Design

Refer to Section 3.9.1 (*Stage 1 Design*).

10.5.2 Stage 2 Design

Refer to Section 3.9.2 (*Stage 2 Design*).

10.5.3 Released-for-Construction Design

Refer to Section 3.9.3 (*Released-for-Construction Design*).

10.5.4 Final Design

Refer to Section 3.9.4 (*Final Design*).

10.5.5 Working Drawings

Refer to Section 3.10 (*Working Drawings*).

10.5.6 Record Drawings

Refer to Section 3.11 (*Record Drawings*).

11 TRAFFIC

11.1 General

This Section 11 presents requirements for the traffic operations of the Department's Project Infrastructure and the Local Agency Project Infrastructure intersections as described in this Section 11. Traffic operations generally refers to Level of Service (LOS) and related operational measures, like delay and density. Traffic operations requirements are focused on providing an acceptable level of operations and minimizing delay to the traveling public, maintaining stakeholders trust, and upholding the Department's integrity.

11.2 Standards and References

Design-Builder shall design the roadway Work in accordance with the applicable requirements of Section 9 (*Roadway*) and the Project Standards shown in Section 26 (*Standards and References*), specific standards defined in this Section 11, Governmental Approvals, and applicable Government Rules. In addition, the following standards shall be used as applicable:

- *Highway Capacity Manual*, Transportation Research Board, 2010
- *CORSIM Modeling Guidelines*, NDOT, September 2012
- *Traffic Forecasting Guidelines*, NDOT, August 2012
- "Pedestrian Clearance, Yellow Change, and All-Red Clearance Interval Signal Timings," Section IV of *Transportation Management Strategies*, RTC, Freeway & Arterial System of Transportation (FAST), 2012
- *Traffic Control Devices Handbook,* Institute of Transportation Engineers, 2013

11.3 Traffic Operations (Design) Requirements

Design-Builder's design for the Project shall meet the Department's traffic operations requirements for the freeway system and intersections within the Site. Traffic operations requirements for the 2025/2035 AM and PM peak periods are described in this Section 11.3. Design-Builder shall calculate intersection LOS and freeway density to demonstrate that its design will meet these traffic operations requirements.

Design-Builder shall conduct intersection and freeway traffic analysis for the 2025 and 2035 horizon years using the projected traffic volumes provided by the Department. Design-Builder's 2025 traffic analysis shall compare the projected traffic operations performance of Design-Builder's design to the performance of the Department's Reference Design. Design-Builder's 2035 traffic analysis shall compare the projected traffic operations performance of the Future Improvement Phases as impacted by Design-Builder's design for the Project to the traffic operations performance of the Project Neon-Future Phase Preliminary Design included in the RIDs.

Design-Builder shall submit any subsequent modifications to Design-Builder's design for the Project including Future Improvement Phases for the Department's review, to determine if additional traffic analysis is required. If the Department determines that additional analysis is required, Design-Builder shall conduct additional analysis to verify that traffic operations are

acceptable, as measured by intersection LOS, freeway density, and other traffic performance measures as described in this Section 11.

The calculation of intersection LOS and freeway density shall be completed using the 2010 *Highway Capacity Manual* and traffic operations software. Details of the tools and procedures for determining traffic operations performance are provided in the *Traffic Modeling and Analysis Procedures* (TMAP) document in the RIDs.

Design-Builder shall submit the traffic operational analysis as part of the Stage 1 Design. Traffic operational analysis results required to support requests for Deviations shall be submitted to the Department for review and comment. Details on the Submittal requirements are provided in Section 11.4 (*Submittals*).

11.3.1 Intersection Operations Requirements

The operations of the intersections in Design-Builder's design shall be compared to the intersection delay values for the Department's Reference Design and Project Neon-Future Phase Preliminary Design listed in Table 11-1. Design-Builder's design shall provide delay comparable to or better (less) than the values in the table for the Department's Reference Design and Project Neon-Future Phase Preliminary Design for the 2025 and 2035 AM/PM peak periods. "Comparable" operations are defined as follows:

- When the operations of the intersections identified in Table 11-1 are listed as LOS A, B, or C, Design-Builder shall provide a Reference Design with LOS C or better operations.
- When the operations of the intersections identified in Table 11-1 are listed as LOS D, Design-Builder shall provide a Reference Design with LOS D or better operations, AND a delay of no more than 5.0 seconds/vehicle greater than the delay listed in Table 11-1.
- When the operations of the intersections identified in Table 11-1 are listed as LOS E or F, Design-Builder shall provide a Reference Design with a delay that is no more than 2.0 seconds/vehicle greater than the delay listed in Table 11-1.

In addition to complying with the intersection LOS requirements, Design-Builder's design shall not exceed specified intersection queue maximums. The purpose of the queue calculations is to ensure that intersections do not cause upstream queues that exceed available storage for turn bays. Design-Builder's design shall provide sufficient storage for the intersection approaches listed in Table 11-2. Sufficient storage shall be determined by calculating the expected maximum queues in 2025 and 2035 (AM and PM peak periods) using the procedures outlined in the TMAP. If the maximum queues are less than the storage provided, the storage is sufficient. Insufficient storage can be addressed by improving the intersection operations, or extending the turn bays.

Table 11-1 Intersection Traffic Operations (LOS) Requirements

No.	Intersection	2025 AM	2025 PM	2035 AM	2035 PM
1	Alta Drive @ Martin Luther King Boulevard	C/33	D/41	D/39	D/49
2	Bonneville Avenue @ I-15 NB ramps	B/10	B/15	B/12	A/5
3	Bonneville Avenue @ Premium Outlet Mall entrance	B/15	C/25	A/7	B/14
4	Grand Central Pkwy @ Bonneville Avenue	D/47	D/54	D/50	E/74
5	Martin Luther King Boulevard @ I-15 SB Collector/Distributor Road on-ramp	B/12	B/13	B/13	B/14
6	Martin Luther King Boulevard @ Bearden Drive	A/6	A/7	A/7	A/7
7	Grand Central Parkway @ Premium Outlet Mall entrance	B/14	A/9	B/20	B/11
8	Grand Central Parkway @ I-15 Grand Central Parkway slip ramp	B/11	A/9	B/12	B/13
9	Charleston Boulevard @ I-15 SB ramps	C/24	B/19	C/25	C/26
10	Charleston Boulevard @ I-15 NB ramps	D/36	D/43	C/34	C/23
11	Charleston Boulevard @ Grand Central Pkwy	D/39	C/27	C/24	D/55
12	I-15 HOV ramps @ HOV direct access ramp	B/15	B/12	B/14	B/14
13	Western Avenue @ HOV direct access ramp	D/38	E/68	D/54	E/59
14	Oakey Boulevard @ Martin Luther King Boulevard	C/22	A/9	B/19	B/11
15	Oakey Boulevard @ Western Avenue	D/38	D/36	C/28	D/38
16	Martin Luther King Boulevard @ Ellis Avenue	A/9	B/14	A/9	B/14
17	Industrial/Grand Central Parkway @ Western Avenue	C/23	C/33	C/36	E/60
18	MLK @ Charleston Blvd slip ramp	A/7	A/6	A/7	A/7

NB = northbound; SB = southbound
X/## = LOS/delay, measured in seconds/vehicle by the applicable *HCM* methodology

Table 11-2 Intersection Traffic Operations (Maximum Queue) Requirements

No.	Intersection	Approach	Queue Storage Description	Baseline Design Storage*	Maximum Queue Requirement
1	Charleston Boulevard @ I-15 Southbound Ramps	SB	Storage between Charleston Boulevard and gore point where the off-ramp from the mainline joins the off-ramp from the southbound CD road	680 feet	Queue length from any movement on this approach may not exceed available storage
		WB	Storage between southbound and northbound (internal storage) plus storage between northbound ramp and Grand Central Parkway (external storage)	520 feet	Queue length from any movement may not exceed available storage
2	Charleston Boulevard @ I-15 Northbound Ramps	NB	Storage between Charleston and I-15 northbound off-ramp gore	1,930 feet	Queue length from any movement may not extend beyond 650 feet**
		EB	Storage between northbound and south-bound ramp (internal storage) plus storage between southbound ramp and 180 feet west of the southbound ramp (external storage)	440 feet	Queue length from any movement may not exceed available storage
		WB	Storage between northbound ramp and Grand Central Parkway (internal storage) plus storage between Grand Central Parkway and D&C Work Limits	780 feet	Queue length from any movement may not exceed available storage
3	Charleston Boulevard @ Grand Central Parkway	EB	Storage between Grand Central Parkway and northbound ramp (internal storage) plus storage between northbound ramp and southbound ramp (external storage)	520 feet	Queue length from any movement may not exceed available storage
4	I-15 HOV Ramps @ NEON Gateway Road	NB	Storage between NEON Gateway Road and I15 northbound HOV off-ramp gore	1,260 feet	Queue length from any movement may not extend beyond 500 feet**
		SB	Storage between NEON Gateway Road and I-15 southbound HOV off-ramp gore	1,850 feet	Queue length from any movement may not extend beyond 700 feet**
		WB	Storage between I-15 HOV ramps and Western Avenue	440 feet	Queue length from any movement may not exceed available storage

EB = eastbound; WB = westbound; NB = northbound; SB = southbound
*Provided for reference only; Design-Builder's design may vary.
**If Design-Builder's design has less storage than the Baseline, the maximum queue requirement shall be reduced proportionally.

11.3.2 Freeway Operations Requirements

The operations of the freeway segments in Design-Builder's design shall be compared to the freeway segment density values for the Department's Reference Design and Project Neon-Future Phase Preliminary Design listed in Tables 11-3 to 11-6. Design-Builder's design shall provide density comparable to or better (less) than the values in these tables, which reflect the 2025 and 2035 AM/ PM peak period performance for the Department's Reference Design and Project Neon-Future Phase Preliminary Design. "Comparable" operations are defined as follows:

- When the operations of the freeway segments identified in Tables 11-3 to 11-6 are listed with a density of up to 26 vehicles/mile/lane (vpmpl), Design-Builder shall provide a design with a density of 26 vpmpl or less.

- When the operations of the freeway segments identified in Tables 11-3 to 11-6 are listed with a density of 27 to 35 vpmpl, Design-Builder shall provide a design with a density of 35 vpmpl or less AND a density of no more than 2.0 vpmpl greater than the density listed in Tables 11-3 to 11-6.

- When the operations of the freeway segments identified in Tables 11-3 to 11-6 are listed with a density of more than 35 vpmpl, Design-Builder shall provide a design with a density that is no more than 2.0 vpmpl greater than the density listed in Tables 11-3 to 11-6.

In addition to the traffic operational requirements described in Section 11.3.2 (*Freeway Operations Requirements*), Design-Builder shall also comply with the minimum number of lane requirements specified in Section 9 (*Roadway*).

Table 11-3 Freeway Segments Traffic Operations Requirements (NB I-15)

No.	Segment	2025 AM	2025 PM	2035 AM	2035 PM
1	South of Sahara Boulevard off-ramp	31	32	25	28
2	Sahara Boulevard off-ramp to on-ramp	38	40	25	29
3	Sahara Boulevard on-ramp to Charleston Boulevard off-ramp	33	38	20	23
4	Charleston Boulevard off-ramp to on-ramp	38	40	18	21
5	Charleston Boulevard on-ramp to WB US 95 connector/Martin Luther King Boulevard	25	26	20	23
6	WB US 95 connector/Martin Luther King Boulevard to EB US 95	21	23	21	25
7	North of EB US 95	30	32	30	36

Table values indicate density, measured in vehicles/mile/lane by the applicable traffic analysis tools
EB = eastbound; WB = westbound; NB = northbound; SB = southbound

Table 11-4 Freeway Segments Traffic Operations Requirements (SB I-15)

No.	Segment	2025 AM	2025 PM	2035 AM	2035 PM
1	North of WB US 95 connector to SB I-15	31	28	37	32
2	WB US 95 connector to Charleston Boulevard off-ramp	24	22	28	25
3	Charleston Boulevard off-ramp to Sahara Boulevard off-ramp	31	27	32	28
4	Sahara Boulevard off-ramp to Charleston Boulevard on-ramp	36	33	34	31
5	Charleston Boulevard on-ramp to Collector/Distributor Road entry	43	38	29	27
6	Collector/Distributor Road entry to Sahara Boulevard on-ramp	35	32		
6A	Collector/Distributor Road entry to Spring Mountain Road off-ramp			26	26
6B	Spring Mountain Road off-ramp to Sahara Boulevard on-ramp			29	29
7	South of Sahara Boulevard on-ramp	29	28	32	36

Table 11-5 Freeway Segments Traffic Operations Requirements (NB Collector-Distributor Road)

No.	Segment	2025 AM	2025 PM	2035 AM	2035 PM
1	South of Sahara Boulevard on-ramp	N/A	N/A	15	16
2	Sahara Boulevard on-ramp to slip ramp to I-15	N/A	N/A	14	15
3	Slip ramp to I-15 to Bonneville Drive off-ramp	N/A	N/A	14	15
4	Bonneville Drive off-ramp to Charleston Boulevard on-ramp	N/A	N/A	17	19
5	Charleston Boulevard on-ramp to EB US 95 connector	N/A	N/A	15	19
6	North of EB US 95 connector	N/A	N/A	20	27

Table values indicate density, measured in vehicles/mile/lane by the applicable traffic analysis tools
EB = eastbound; WB = westbound; NB = northbound; SB = southbound
N/A = Not applicable – no requirements for a northbound Collector/Distributor road in 2025

Table 11-6 Freeway Segments Traffic Operations Requirements (SB Collector/ Distributor Road)

No.	Segment	2025 AM	2025 PM	2035 AM	2035 PM
1	Martin Luther King Boulevard on-ramp to Charleston Boulevard off-ramp	24	21	25	22
2	Charleston Boulevard off-ramp to Pinto Road on-ramp	19	16	19	16
3	Pinto Road on-ramp to Sahara Boulevard off-ramp	15	12	14	13
4	Sahara Boulevard off-ramp to merge with mainline I-15	9	10	10	12

Table values indicate density, measured in vehicles/mile/lane by the applicable traffic analysis tools
EB = eastbound; WB = westbound; NB = northbound; SB = southbound

11.4 Submittals

Design-Builder shall provide the Department at a minimum, the documents and files identified below for each stage of design development for review and comment with the Design review submissions. The Submittals shall be consistent with the Traffic Modeling Analysis Guidelines provided in the RIDs, and the 2010 *Highway Capacity Manual.*

11.4.1 Stage 1 Design

Design-Builder shall submit preliminary CORSIM and Synchro files consistent with the Design submittals. Input and output files and summary spreadsheets shall be included.

11.4.2 Stage 2 Design

Design-Builder shall submit updated CORSIM and Synchro files consistent with the Design submittals. Input and output files and summary spreadsheets shall be included.

11.4.3 Released-for-Construction Design

Not relevant to this Section 11.

11.4.4 Final Design

Design-Builder shall submit final CORSIM and Synchro files consistent with the Design submittals. Input and output files and summary spreadsheets shall be included, as well as a narrative summary report.

11.4.5 Working Drawings

Not relevant to this Section 11.

11.4.6 Record Drawings

Not relevant to this Section 11.

This page intentionally left blank.

12 MAINTENANCE OF TRAFFIC

12.1 General

Design-Builder shall design and construct the Project, in conformance with the requirements stated in this Section 12, to provide for the safe and efficient movement of people, goods, and services, through and around the Project, while minimizing negative impacts to users, residents, and businesses. Maintenance of traffic (MOT) shall be performed in a manner that minimizes both construction duration and impact to the traveling public. The traveling public includes, but is not limited to, motorists, bicyclists, pedestrians, and transit operations. This Section 12 (*Maintenance of Traffic*) defines specific requirements, restrictions, and allowable closure durations for both travel lanes and ramps. Design-Builder shall submit a Transportation Management Plan (TMP). The TMP shall include Temporary Traffic Control Plans (TTCPs).

12.1.1 Traffic Control Management

Design-Builder's MOT Manager shall provide traffic control management for the Project that includes, but is not limited to, the following:

1. Coordinate traffic control activities with the Department, City of Las Vegas, Clark County, and Regional Transportation Commission of Southern Nevada (RTC). In addition, coordinate and communicate proposed traffic control activities with the Department's Public Involvement Plan (PIP) Manager.
2. Implement traffic management strategies.
3. Evaluate the effectiveness of the traffic management strategies and details and make adjustments as needed.
4. Supervise the activities of the Traffic Control Supervisor (TCS).
5. Minimize impact to traveling public during Special Events.

Design-Builder shall provide an onsite TCS whose sole responsibility is to supervise and continuously monitor the installation and maintenance of all traffic control devices. The TCS must be available 24 hours per day, 7 days per week, throughout the duration of onsite Project activities, including times of suspension of the Work. At times when the TCS is not on the Project Site, the TCS will be onsite within 45 minutes of notification. Design-Builder shall inspect traffic control activities in accordance with Section 12.5.3 (*Traffic Control Inspections and Records*).

12.2 Standards and References

Design-Builder shall design and construct the Work in accordance with the applicable requirements of the Contract Documents, including the Project Standards shown in Section 26 (*Standards and References*), specific standards defined in this Section 12, Governmental Approvals, and applicable Government Rules.

12.3 Transportation Management Plan

Design-Builder shall provide a TMP in accordance with *The Work Zone Safety and Mobility Implementation Guide* (Revised March 2012), the requirements defined in Section 12.4 (*Design*

Requirements), and the Project Standards. In addition, Design-Builder shall prepare a traffic management section for the PIP as set forth in Section 6 (*Public Involvement*). The Department will provide Design-Builder with a list of Department representatives for the Project traffic management team to be included in Design-Builder's TMP.

The preliminary TMP is due in accordance with the submittal schedule set forth for the PMP (Attachment 01-3 [*Project Management Plan*]) and shall be updated in accordance with Section 1.5 (*Project Management Plan)*. The Department will review and approve the TMP as part of the PMP.

12.3.1 Additional Design-Builder Requirements for TMP Development

In addition to the requirements in *The Work Zone Safety and Mobility Implementation Guide* (Revised March 2012), the TMP shall include the following information:

1. A cover page/title sheet sealed by a Registered Professional Engineer.

2. A Temporary Traffic Control Plan (TTCP), including:

    a. Preliminary Plans showing the sequence of Work phases to be performed, duration of Work, and the traveled way to be used for all movements of traffic during all Work phases for each Design Unit.

    b. Traffic analysis for intersections as described in Section 12.4.2.1 (*Maintenance of Traffic Analysis*) to ensure that there are no operational or safety issues created by the TMP.

    c. All proposed long-term lane closures and lane restrictions anticipated for the design and construction of the Project.

    d. Detail to the level and standards defined in the NDOT Road Design Guide, 2010 Edition.

    e. Traffic Control Standard Drawings developed as described in Section 26.1.1 (*Department's Standard Specifications and Standard Plans*) and in Section 26.5 (*Project Neon-DB Standard Drawings*).

    f. Traffic Control Specifications developed as described in Section 26.1.1 (*Department's Standard Specifications and Standard Plans*) and in Section 26.2 (*Modifications to the Department's Standard Specifications*).

    g. Descriptions of the design methods to be used for temporary roadways.

    h. A lane closure request form for every lane closure if Design-Builder is permitted to lower the number of roadway lanes as described in Section 12.4.5 (*Request for Construction Closures*).

    i. Detour routes proposed for Construction Work. Design-Builder shall obtain approval from local Governmental Entities for all proposed detour routes and shall obtain, pay for, and comply with requirements of all necessary Governmental Approvals and Agreements required for the detour routes.

    j. Descriptions that include a switching procedure for traffic between each controlled MOT phase change. The switching procedure shall consist of the methods, actions,

and signing necessary to complete the switch and the number and duties of traffic personnel assigned to perform the switch.

k. Descriptions that describe a process for transitioning from temporary signage and temporary pavement marking to permanent signing and permanent pavement marking.

l. Descriptions that require Design-Builder to coordinate Work with the construction and maintenance projects of Governmental Entities that are adjacent to or near the Project ROW. The Design Documents shall include a coordination clause listing other adjacent or nearby construction projects.

m. Descriptions that require Design-Builder to maintain existing access to all properties within the Project ROW except as provided elsewhere in the Contract Documents. Appropriate information about access modifications shall be made available to the property owners as required in the PIP.

3. Approach to incident management and response in conjunction with the Safety Plan and Section 1.2.7 (*Safety and Health*): Items to coordinate shall include identifying staging areas where equipment or vehicles needed for incident clearance response can be stored and have reasonable and safe access to the construction zone. Design-Builder shall have the necessary equipment onsite to repair temporary barrier or to set up temporary traffic control until the barrier can be repaired. Design-Builder shall have procedures to identify and incorporate the needs of transit operators, Utility Owners, and business owners in the Project corridor, including Utility Owner access and business access signing.

4. Process to identify, design, and receive approval for the designs of any necessary temporary traffic signals.

5. Process to assess the need for revised traffic signal timings, and if revisions are proposed, coordination with RTC FAST to perform any signal timing changes.

6. Work zone access management map and a construction haul route map for each construction phase/stage proposed by Design-Builder.

7. Methods and frequency of inspection and maintenance of all traffic control devices, configurations, and setups throughout the Project, at a minimum at the frequencies described in Section 12.1.1 (*Traffic Control Management*) and in accordance with Project Standards.

8. Provisions for continuous access to established truck routes and any Hazardous Materials routes. Procedures are to be identified that can modify the TTCPs as needed to adapt to current project circumstances.

9. Provisions for communicating all MOT phase installations and changes with emergency service providers, school transportation officials, transit operators, and all affected local Governmental Entities. The provisions shall be included in the section for the PIP as set forth in Section 6 (*Public Involvement*).

10. Information developed in coordination with, and consistent with, the PIP as set forth in Section 6 (*Public Involvement*), and procedures to communicate TMP information to the Department's Public Involvement Plan Manager regarding all MOT work to the public before implementation of any MOT phase or phase change.

11. Identification of MOT meetings to be held with the Department and all affected Governmental Entities. As a minimum, Design-Builder shall arrange and hold an initial MOT meeting at least 4 weeks before initial installation of traffic control devices for any MOT phase. Design-Builder shall hold a MOT meeting at least 2 weeks before any MOT phase switch.

12. Access and mobility plan depicting haul routes and access points as described in Section 12.5.1 (*Construction Access and Haul Routes*).

13. Point of contact list that identifies current contact information for Key Personnel and includes, but is not limited to, the following agencies affected by the Project: local fire/police departments, local school districts, mass transit agencies, state or community colleges, and 911 dispatch centers.

14. Design-Builder's plan to coordinate any special transportation accommodations during all Special Events as described in Section 6.3.9 (*Special Events, Conventions, and Annual Events*) for the duration of the Project.

15. Design-Builder shall prepare the TMP implementing the elements defined in Design-Builder's Emergency Plan and Incident Management Plan that are included as part of the Safety Plan for the Project as described in Section 1.2.7 (*Safety and Health*).

12.4 Design Requirements

12.4.1 General

The information listed below shall be incorporated into the TTCPs and the TMP:

1. All MOT procedures for channelization, delineation, and signing shall be in accordance with the Project Standards.

2. All Work zone traffic control devices shall be compliant with NCHRP Report 350 requirements. Positive Protection Devices are devices that contain and/or redirect vehicles and meet the crashworthiness evaluation criteria contained in the AASHTO's *Manual for Assessing Safety Hardware*.

3. Design-Builder shall provide temporary striping for any traffic shifts out of existing lane markings. Design-Builder shall remove conflicting striping in its entirety. Design-Builder shall maintain and replace striping as necessary to provide a clear and safe roadway.

4. Design-Builder shall obtain review and comments from the Department for all temporary entrance and exit ramps. Design-Builder shall perform associated engineering, documentation, and coordination.

5. Separation:

    a. A minimum clearance of 2 feet between barrier and edge of travel lane is required.

    b. Temporary concrete barrier and approved end treatments shall be used to protect the motoring public from the Work area when Work or equipment, including personal vehicles and trucks used for loading and unloading, are within an 8-foot offset of the travel lane. Portable concrete barrier or temporary guardrail shall be provided if the entire clear zone is not traversable or if hazards exist within the clear zone.

c. Design-Builder shall provide, as necessary, median concrete barrier rail (CBR) with temporary traffic screen between opposing lanes at all times for I-15, US 95, and I-515. Design-Builder shall provide CBR protection with glare screen between public traffic lanes and Work zones.

d. Portable concrete barrier on bridge decks shall be installed according to the Department's Standard Drawings.

e. On roadways where the posted speed limit is 45 mph or above, Design-Builder shall use drums for channelizing devices. Where barricades are used, Design-Builder shall not use barricade warning lights.

f. On streets where the posted speed limit is 40 mph or below, tubular delineators may be used to separate two-way traffic when opposing traffic is maintained on the same roadbed.

6. Design-Builder shall maintain all existing on-street parking, unless approved by the Department.

7. Design-Builder shall maintain access at all times to all properties with existing accesses. If the existing access must be temporarily closed or modified due to construction operations, Design-Builder shall provide and maintain in a safe condition temporary access in a manner closely approximating the existing access.

8. Design-Builder shall maintain existing pedestrian and bicycle accommodations within the general limits of the Work during construction. Design-Builder shall provide a pedestrian and bicycle plan demonstrating how safe and continuous access shall be accommodated for all Project construction phasing/staging for approval by the Department.

   a. Design-Builder shall indicate how pedestrian traffic will be isolated from Work zones and vehicular traffic.

   b. If pedestrian traffic is routed onto the roadway at other than crosswalk locations, Design-Builder shall use portable precast concrete barrier rails to separate pedestrian traffic from the Work zone and vehicular traffic. Portable concrete precast concrete barrier rails shall be end-connected (rod and loop connection) and anchor-pinned in accordance with Department's Standard Drawing R-8.7.1.

   c. Sidewalk closures may be allowed, but only for one block and on one side of the street at a time.

   d. A pedestrian-safe path shall be maintained at all times along business frontages unless otherwise approved.

9. Design-Builder shall maintain existing transit facilities including shelters, signing, and other features within the general limits of the Work during construction.

10. Traffic signals, either temporary or permanent, shall remain operational from beginning of implementation to end of implementation.

11. Uncurbed edge of pavement widths: Any existing, temporary, or proposed edges of pavement shall be a minimum of 2 feet away from the edge of a travel lane.

12. Design-Builder shall use portable dynamic message signs (DMSs) to assist traffic flow approaching and through construction zones on the interstate freeway and as required on

cross streets. At least 7 days before a road closure or major change in the roadway configuration or traffic pattern, Design-Builder shall provide DMSs warning motorists of the pending changes.

a. The DMSs shall remain in place after the long-term traffic control is in place and Work has begun in order to provide information to motorists concerning proposed short-term traffic control changes such as nightly lane closures or nightly ramp closures.

b. The DMSs shall be used to convey information that is not reasonable to provide using static signs, such as detour route guidance.

13. Design-Builder shall design all active roadways for effective drainage, with no potential for ponding on the travel lanes. Drainage shall be maintained at all times during all phases of Construction Work.

14. Temporary Electrical: Design-Builder shall provide temporary signals and lighting to maintain operations and comply with the requirements of the applicable Governmental Entities. Design-Builder shall maintain all existing communications for and to traffic signals throughout the performance of the Work. Design-Builder shall maintain existing signal interconnect and communication systems. Design-Builder shall provide and maintain adequate vehicle and pedestrian detection systems through Final Acceptance.

15. Pavement Edge Drop-offs:

    a. Drop-off conditions of 3 inches or less shall be protected by barrels or delineators.

    b. Drop-offs greater than 3 inches shall be wedged with dense graded aggregate or other suitable materials on a 3H:1V or flatter slope.

    c. If a positive separation of 8 feet or greater can be achieved between traffic and the drop-off, no wedging will be required, but barrels will be required. Temporary drop-offs during working hours in which construction operations are taking place shall be kept to a minimum.

    d. Drop-offs greater than 3 inches, resulting from excavations directly adjacent to traffic (with no positive separation), shall be limited to 500 feet in length. The intent of this requirement is to keep the temporary wedging operation close to the Work to promote safety for motorists.

16. Design-Builder shall follow the requirements set forth in Section 14.4 (*Construction Requirements*) for bridge demolitions, bridge and retaining wall construction, and bridge widening.

17. Design-Builder shall maintain access from Charleston Boulevard to the businesses at the historic Holsum Lofts properties, 241 West Charleston Boulevard; access shall be unimpeded at all times during Construction Work through Substantial Completion.

18. Design-Builder shall maintain a minimum of one driveway per business at all times. If business has delivery driveways or access, Design-Builder shall maintain a minimum of one delivery access. For businesses with multiple driveways, when driveway closure is necessary to progress Work, no driveway may be closed for more than 30 consecutive days or more than 45 days in a 90-day period. The grades for temporary driveways shall not exceed (increase) the grades of the existing driveway.

19. **Grand Central-Western Connection:** The Grand Central-Western Connection to Charleston Boulevard shall be complete and open to traffic prior to any Construction Closures on Martin Luther King Boulevard and/or Wall Street.

20. **Emergency Response Access:** Provide and maintain unimpeded access to and from the east and west sides of the I-15 corridor at all times during Construction Work through Substantial Completion for emergency responders including but not limited to the Las Vegas Fire Rescue Station 10.

21. **Restricted Date Requirements**: To accommodate access in the Project area during the holiday season, Design-Builder shall provide the number of lanes, turn lanes, and lengths of the lanes currently available, as of the Setting Date, completely open and unrestricted during the Construction Work through Final Acceptance beginning on November 15 through January 15 of the following year for Charleston Boulevard, Grand Central Parkway, and the I-15 and Charleston Boulevard interchange.

12.4.2 Design Parameters for Traffic Control Plans

Design Speed: The design speed and posted speed shall be the existing posted speed limit on approaches to the Work zone, with a maximum 10-mph speed reduction within the Work zone. If speed reductions of more than 10 mph below existing posted speed limits are deemed necessary, Design-Builder shall submit justification and obtain approval from the Department.

Design Vehicle: For I-15, US 95, I-515, interchange ramps, and express and HOV facilities, Design-Builder shall accommodate a WB-67 for movements through the Work zone. The effect of large vehicle off-tracking in horizontal curves shall be provided in the TCPs when determining the available width of a roadway or ramp for MOT and protecting the Work area.

For arterials and local roadways, Design-Builder shall accommodate a WB-62 for movements through the Work zone. Turning movements on all local roadways and driveways shall, at a minimum, provide similar characteristics as existing.

Number of Lanes: The minimum number of lanes to be maintained shall be the number of lanes currently available (as of the Setting Date) on each facility, including number and length of turn lanes or as set forth in Section 12.4.3 (*Construction Closures*).

Lane Widths: During temporary construction traffic control conditions, the preferable minimum lane width for travel on I-15, US 95, I-515, interchange ramps, and express and HOV facilities is 12 feet. The minimum allowable lane widths are 11 feet for the inside and center lanes and 12 feet for the outside lane.

For temporary construction traffic control conditions on arterial streets, the minimum allowable lane widths are 11 feet, and 10 feet for turn lanes. For residential streets, the Department may, in its sole discretion, allow 10-foot lanes in limited circumstances during construction for short distances.

Shoulder: For I-15, US 95, I-515, interchange ramps, and express and HOV facilities, the preferred shoulder width is 8 feet on the outside and 2 feet on the inside. The minimum allowable horizontal clearance for temporary concrete barriers is 2 feet for both the outside lane and the inside lane. If the preferred outside shoulder width of 8 feet is not provided, Design-Builder shall provide emergency pullouts between each interchange, or at ½-mile spacing, whichever is less.

Minimum pullout length is 150 feet, not including tapers. Design-Builder shall provide tapers for pullouts at 50:1 or greater. The minimum pullout width is 14 feet beyond the edge of travel way. Design-Builder shall sign the pullouts for emergency parking only and provide a paved surface that is not subject to flooding or other conditions that could render them ineffective. Design-Builder shall maintain and relocate, as necessary, existing maintenance pullouts during construction.

For arterials and local streets, the preferred shoulder width is to match the existing condition. The minimum allowable horizontal clearance is 2 feet for both the outside lane and the inside lane to curbs, temporary concrete barriers, delineators, and other separation items.

12.4.2.1 Maintenance of Traffic Analysis

Design-Builder shall evaluate intersection traffic operations in advance of all major MOT phases. Major phases will be identified by the Department, and will generally be indicated by major changes in work locations and lane closures. The purpose of the evaluation is to ensure that any traffic operations impacts related to the MOT plans are acceptable to the Department. Design-Builder shall use existing traffic data (2013 to 2015) supplied by the Department, supplemented by additional traffic counts by Design-Builder as required. Design-Builder should report any increases in intersection delay or queue length. The intersections to be evaluated are listed in Section 11 (*Traffic*). Design-Builder shall use Synchro 8, using the procedures in the Traffic Modeling and Analysis Procedures (TMAP) in the RID to project the expected queue lengths and delays.

The Department will not use specific delay or queue length thresholds for evaluation, but traffic operations will be evaluated while considering Design-Builder's overall MOT plans and approach. If delays or queues are substantially higher than pre-construction conditions, Design-Builder shall review and propose alternative strategies.

The traffic analysis shall be submitted to the Department with the TTCPs and shall be subject to the same review requirements. The traffic analysis shall be summarized in report format, and all supporting documentation shall also be submitted to the Department.

The Department may identify the additional analysis necessary if the traffic impacts are unacceptable to the Department. If so, Design-Builder will be required to prepare an analysis of the Work activities that includes the following:

1. Project Location and Description:
    a. Location and Work required
    b. Existing condition
    c. Purpose for the threshold exception request, along with how long and what hours the lane closures will be in effect
    d. Recommendations to minimize impacts
2. MOT Alternatives – All potential options for MOT with descriptions and discussions of each, including the following:
    a. Advantages/disadvantages
    b. Estimated timeframe
    c. User and construction cost

   d. Potential economic impact to communities and businesses
   e. Ability to gain public buy-in and awareness of the impacts and means to mitigate those impacts

3. Traffic Analysis
   a. Queue/delay analysis
   b. Percent diversion that is reasonable to expect given the location and construction activity
   c. Resulting traffic operations after diverting

4. Detour Calculations
   a. If a detour is proposed, provide detour route description, detour map(s), and user cost created to travel the extra distance.
   b. Provide capacity, volume, and queue length calculations for the critical node along the detour route.
   c. Suggest improvements to the detour route to improve traffic flow on the route with the detour traffic.

5. Summary and Recommendations
   a. List alternatives in order of preference and explain why the alternative is or is not preferred.
   b. Summarize alternatives in table format, including important comparison items such as maximum queue lengths; the number and width of open lanes; the length, dates, and duration of construction period; and incremental construction cost associated with each option.

Design-Builder shall be responsible for monitoring actual queues and delays during MOT operations. If the queues and delays exceed the predicted value (regardless of the reason), then it shall be Design-Builder's responsibility to modify the TTCPs to mitigate impacts to traffic operations. All proposed changes to the TTCPs shall be submitted to the Department for review and comment.

12.4.3 Construction Closures

Design-Builder shall prepare the TMP, TTCPs, and Project Schedule, and perform Construction Work in accordance with the Construction Closures defined in this Section 12.4.3. Design-Builder shall schedule and coordinate the Work to minimize the number of Construction Closures. Any Construction Closure that is not in accordance Section 12.4.3.2 (*Permitted Construction Closures*) and as defined in the tables included in Attachment 12-1 (*Construction Closure Tables*) shall be subject to Section 17 of the Contract. If Design-Builder fails to open the travel lanes, charges shall be assessed in accordance with Section 17.2 of the Contract.

Construction Closures require adequate detour signing and advance guide signing. Detour signing shall be well-maintained and visible at all times. Construction Closures of interchange ramps and detours shall require advisory and advanced warning signs and message boards on other freeways and streets in the vicinity of the Project.

12.4.3.1 Not Used

12.4.3.2 Permitted Construction Closures

This section defines the Permitted Construction Closures that can be implemented by the Design-Builder during both the Peak Periods and Off-Peak Periods beginning at the commencement of Construction Work through Final Acceptance. The Permitted Construction Closures are defined in the tables included in Attachment 12-1 (*Construction Closure Tables*). The tables in Attachment 12-1 provide the route, direction of travel, geographical limits, minimum available lanes, closure time period requirements, and allowable Construction Work. Design-Builder shall prepare the TMP, TTCPs, and Project Schedule, and perform Construction Work in accordance with the Permitted Construction Closures defined in this Section.

a) Permitted Construction Closures shall not be implemented on the I-15 and the US 95/I-515 freeway corridors during the same time period, with the exception of the specific Construction Closures to perform the Construction Work to replace the structures of the I-15 and the US 95/I 515 grade separation.

b) No Construction Closures shall be permitted on I-15 and US 95/I-515 system interchange ramps other than the ones listed in Table 12-4 in Attachment 12-1 (*Construction Closure Tables*).

12.4.3.3 Permitted Construction Closures Off-Peak Periods Only

This section defines the Permitted Construction Closures that can be implemented by Design-Builder only during Off-Peak Periods beginning at the commencement of Construction Work and extending through Substantial Completion. These Construction Closures shall not be implemented when Construction Closures are in effect as described in Section 12.4.3.2 (*Permitted Construction Closures*). Any Construction Closures during Off-Peak Periods proposed to be implemented in addition to Permitted Construction Closures described in Section 12.4.3.2 (*Permitted Construction Closures*) shall be a Deviation. Any Construction Closure that is not in accordance with this Section 12.4.3.3 (*Permitted Construction Closures Off-Peak Periods Only*) shall be subject to Section 17 of the Contract. If Design-Builder fails to open the travel lanes, charges shall be assessed in accordance with Section 17.2 of the Contract.

- Northbound and southbound I-15 shall not be reduced by more than one lane during Off-Peak Periods.
- Eastbound and westbound US 95 shall not be reduced by more than one lane during Off-Peak Periods.
- Eastbound and westbound US 95 shall not be reduced by more than two lanes during Off-Peak Periods for Construction Work to erect the new H-3055 and I-937 bridge superstructures.
- The two existing express lanes may be closed for the Construction Work of the Express to HOV Conversion.
- For the entire Project duration a maximum of four Construction Closures of all lanes for the exit ramp from southbound I-15 to Sahara Avenue may be implemented Monday through Thursday during Off-Peak Periods only.

- For the entire Project duration a maximum of four Construction Closures of all lanes for the entrance ramp from Sahara Avenue to northbound I-15 may be implemented Monday through Thursday during Off-Peak Periods only.
- For the entire Project duration a maximum of four Construction Closures of all lanes for the entrance ramp from Charleston Boulevard / Grand Central Parkway to northbound I-15 may be implemented Monday through Thursday during Off-Peak Periods only.
- For the entire Project duration a maximum of four Construction Closures of all lanes for the exit ramp from northbound I-15 to Martin Luther King Boulevard for the Construction Work to erect the I-938 Bridge superstructure may be implemented Monday through Thursday during Off-Peak Periods only.
- For the entire Project duration a maximum of two Construction Closures of all lanes for Charleston Boulevard for the Construction Work to demolish each existing bridge crossing Charleston Boulevard may be implemented during Off-Peak Periods only. A maximum of four Construction Closures of all lanes for Charleston Boulevard for the Construction Work to erect each new bridge superstructure crossing Charleston Boulevard may be implemented during Off-Peak Periods only.
- For the entire Project duration a maximum of two Construction Closures of all lanes for Alta Drive / Bonneville Avenue for the Construction Work to demolish each existing bridge crossing Alta Drive / Bonneville Avenue may be implemented during Off-Peak Periods only. A maximum of four Construction Closures of all lanes for Alta Drive / Bonneville Avenue for the Construction Work to erect each new bridge superstructure crossing Alta Drive / Bonneville Avenue may be implemented during Off-Peak Periods only.
- For the entire Project duration a maximum of two Construction Closures of all lanes for Oakey Boulevard / Wyoming Avenue for the Construction Work to demolish the existing bridge(s) crossing Oakey Boulevard / Wyoming Avenue may be implemented during Off-Peak Periods only. A maximum of four Construction Closures of all lanes for Oakey Boulevard / Wyoming Avenue for the Construction Work to erect the new bridge(s) superstructure crossing Oakey Boulevard / Wyoming Avenue may be implemented during Off-Peak Periods only.
- For the entire Project duration a maximum of two Construction Closures of all lanes for Symphony Park Avenue for the Construction Work to demolish each existing bridge crossing Symphony Park Avenue may be implemented during Off-Peak Periods only. A maximum of four Construction Closures of all lanes for Symphony Park Avenue for the Construction Work to erect each new bridge superstructure crossing Symphony Park Avenue may be implemented during Off-Peak Periods only.
- For the entire Project duration a maximum of two Construction Closures of all lanes for Martin Luther King Boulevard for the Construction Work to demolish each existing bridge crossing Martin Luther King Boulevard may be implemented during Off-Peak Periods only. A maximum of four Construction Closures of all lanes for Martin Luther King Boulevard for the Construction Work to erect each new bridge superstructure crossing Martin Luther King Boulevard may be implemented during Off-Peak Periods only.
- For the entire Project duration a maximum of three Construction Closures of all lanes for the Martin Luther King Boulevard entrance ramps to northbound I-15 and I-515 may be implemented during Off- Peak Periods only.
- Construction Closures for the Construction Work to erect new ATM gantries and overhead sign bridges may be implemented during Off-Peak Periods only.

12.4.3.4 Construction Closures Special Events

For Special Events, Design-Builder shall provide the number of lanes equal to or exceeding the Pre-Construction Configuration in both the northbound and southbound directions for the I-15 corridor. These minimum numbers of open travel lanes shall be provided a minimum of one day prior to and one day following the Special Events. If Design-Builder fails to open the travel lanes, charges shall be assessed in accordance with Section 17.2 of the Contract.

The Department will allow exceptions to this Section 12.4.3.4 during Special Events which occur between the Tuesday following NASCAR and November 15th of the same year not to exceed two (2) separate occurrences for each the northbound and southbound directions during the Construction Work.

12.4.3.5 Seasonal Construction Closures

To accommodate access in the Project area during the holiday season, Design-Builder shall provide the number of lanes, turn lanes, and lengths of the lanes currently available, as of the Setting Date, completely open and unrestricted during the Construction Work through Final Acceptance beginning on November 15 through January 15 of the following year for Charleston Boulevard, Grand Central Parkway, and the I-15 and Charleston Boulevard interchange. If Design-Builder fails to open the travel lanes, charges shall be assessed in accordance with Section 17.2 of the Contract.

12.4.4 Construction Closure Sequencing

This section defines the sequencing requirements associated with implementing Construction Closures for the Project. Prior to Design-Builder implementing a Construction Closure as described in Section 12.4.3 (*Construction Closures*) and as defined in Attachment 12-1 (*Construction Closures Tables*), the following requirements shall be met. Any Construction Closure that is not in accordance with this Section 12.4.4 shall be subject to Section 17.2 of the Contract.

Prior to implementing Construction Closures as defined in Table 12-5 of Attachment 12-1 (*Construction Closures Tables*) and associated detours for the I-15 / Charleston Boulevard interchange ramps, the following requirements shall be met:

- **Requirement 1**: The US 95 / Martin Luther King Boulevard interchange shall be fully open providing a minimum of the Pre-Construction Configuration without any Construction Closures.
- **Requirement 2**: The I-15 / Sahara Avenue interchange shall be fully open providing a minimum of the Pre-Construction Configuration without any Construction Closures.
- **Requirement 3**: Sahara Avenue shall be fully open providing a minimum of the Pre-Construction Configuration without any Construction Closures.

Prior to implementing Construction Closures as defined in Table 12-5 of Attachment 12-1 (*Construction Closures Tables*) and associated detours for the US 95 / Martin Luther King Boulevard interchange ramps, the following requirements shall be met:

- **Requirement 1**: The I-15 / Charleston Boulevard interchange shall be fully open providing a minimum of the Pre-Construction Configuration without any Construction Closures.

- **Requirement 2**: Charleston Boulevard shall be fully open providing a minimum of the Pre-Construction Configuration without any Construction Closures.

Prior to implementing Construction Closures as defined in Table 12-5 of Attachment 12-1 (*Construction Closure Tables*) and associated detours for the I-15 / Sahara Avenue interchange ramps, the following requirements shall be met:

- **Requirement 1**: The I-15 / Charleston Boulevard interchange shall be fully open providing a minimum of the Pre-Construction Configuration without any Construction Closures.
- **Requirement 2**: Charleston Boulevard shall be fully open providing a minimum of the Pre-Construction Configuration without any Construction Closures.

Prior to implementing Construction Closures and associated detours for Oakey Boulevard and Wyoming Avenue, the following requirements shall be met:

- **Requirement 1**: Charleston Boulevard shall be fully open providing a minimum of the Pre-Construction Configuration without any Construction Closures.
- **Requirement 2**: Wall Street shall be fully open providing a minimum of the Pre-Construction Configuration without any Construction Closures.
- Requirement 3: Sahara Avenue shall be fully open providing a minimum of the Pre Construction Configuration without any Construction Closures.

Prior to implementing Construction Closures and associated detours for Charleston Boulevard, the following requirements shall be met:

- **Requirement 1**: Oakey Boulevard and Wyoming Avenue shall be fully open providing a minimum of the Pre-Construction Configuration without any Construction Closures.
- **Requirement 2**: Alta Drive and Bonneville Avenue shall be fully open providing a minimum of the Pre-Construction Configuration without any Construction Closures.

Prior to implementing Construction Closures and associated detours for Alta Drive and Bonneville Avenue, the following requirements shall be met:

- **Requirement 1**: Charleston Boulevard shall be fully open providing a minimum of the Pre-Construction Configuration without any Construction Closures.
- **Requirement 2**: Symphony Park Avenue shall be fully open providing a minimum of the Pre-Construction Configuration without any Construction Closures.

Prior to implementing Construction Closures and associated detours for Symphony Park Avenue, the following requirements shall be met:

- **Requirement 1**: Alta Drive and Bonneville Avenue shall be fully open providing a minimum of the Pre-Construction Configuration without any Construction Closures.

Prior to implementing Construction Closures and associated detours for Martin Luther King Boulevard, the following requirements shall be met:

- **Requirement 1**: Grand Central Parkway shall be fully open providing a minimum of the Pre-Construction Configuration without any Construction Closures.
- **Requirement 2**: Western Avenue shall be fully open providing a minimum of the Pre-Construction Configuration without any Construction Closures.

Prior to implementing Construction Closures and associated detours for Grand Central Parkway, the following requirements shall be met:

- **Requirement 1**: Martin Luther King Boulevard shall be fully open providing a minimum of the Pre-Construction Configuration without any Construction Closures.
- **Requirement 2**: Western Avenue shall be fully open providing a minimum of the Pre-Construction Configuration without any Construction Closures.

Prior to implementing Construction Closures and associated detours for Martin Luther King Boulevard to eastbound US 95 / I-515 ramp, the following requirements shall be met:

- **Requirement:** Construction Work to modify the Martin Luther King Boulevard to eastbound US 95 / I-515 ramp shall not occur until the Construction Work on the Rancho Drive to eastbound US 95 ramp is complete and open to traffic.

Prior to implementing Construction Closures and associated detours for the eastbound US 95 to northbound I-15 ramp (EN ramp), the following requirements shall be met:

- **Requirement:** Construction Work to modify the EN ramp shall not occur until the Construction Work on the Rancho Drive to eastbound US 95 ramp is complete and open to traffic.

Prior to implementing Construction Closures and associated detours for interchange ramps, the following requirements shall be met:

- **Requirement 1:** Consecutive entrance ramps shall remain fully open providing a minimum of the Pre-Construction Configuration without any Construction Closures.
- **Requirement 2:** Consecutive exit ramps shall remain fully open providing a minimum of the Pre-Construction Configuration without any Construction Closures.
- **Requirement 3:** Local Agency roadway intersecting the open ramp shall be fully open providing a minimum of the Pre-Construction Configuration without any Construction Closures.

Prior to implementing Construction Closures and associated detours for Local Agency roadways, the following requirements shall be met:

- **Requirement 1:** Consecutive parallel Local Agency roadways shall remain open to traffic with no reduction in lanes.

12.4.5 Request for Construction Closures

Design-Builder shall obtain approval for every Construction Closure from the Department through the submittal of the TMP and TTCPs. A lane closure request form (LCR) for every Construction Closure for the proposed implementation of the Released-for-Construction TTCPs shall be submitted to the Department for review. Each lane closure request shall include the following:

1. Detailed description of the Construction Closure, need and type of Construction Closure, construction activities that will occur, and date, timing and duration of Construction Closure
2. Detours for full Construction Closures
3. Description of the coordination and relationship between the requested Construction Closure and:

a. Any other Construction Closures that will be in effect during the same period of time

b. Any past Construction Closures relating to the requested Construction Closure, along with results and outcomes of past Construction Closures

c. Future Construction Closures of the same facility

d. Adjacent projects

The inspection of the temporary nightly traffic control shall be as set forth in Section 2 (*Quality Management System*). Design-Builder shall immediately issue a Nonconformance Report if the traffic control is not implemented in accordance with the TTCP plans included in the LCR or otherwise varies from the TTCP.

12.4.6 Detours

Design-Builder shall design, place, and maintain all construction detour routes required during Construction Work and shall obtain all necessary Department approvals and Governmental Approvals for detours from the appropriate Governmental Entities. All detour durations shall be minimized for the benefit of the traveling public.

Design-Builder shall use State routes for detour routes, wherever available. If State routes are unavailable, Design-Builder shall use local arterials, provided that Design-Builder has obtained the necessary permits from the Governmental Entity having jurisdiction. Design-Builder shall not use local streets through residential neighborhoods for detour routes. The following existing roadways are authorized for detour routes for the Project:

- Sahara Avenue
- Charleston Boulevard
- Martin Luther King Boulevard
- Bonanza Road
- Washington Avenue
- Western Avenue
- Grand Central Parkway

Design-Builder shall provide motorists with guidance on diverting around the construction, detouring around specific construction sites, and traveling through the construction areas. This shall include the installation and maintenance of temporary regional signs to divert traffic around the Project. Motorist guidance to and along detour routes shall be provided, together with regional guidance.

Design-Builder shall maintain detour routes in a condition that is reasonably smooth and free from holes, ruts, ridges, bumps, dust, and standing water. Once the detour is removed and traffic is returned to its normal pattern, the detour route shall be restored to a condition that is equivalent or better than the condition that existed before its use for this purpose. All required pavement markings shall comply with the Project Standards and requirements of the local Governmental Entities.

12.4.7 Advanced Traffic Management System

Design-Builder shall provide ATM systems to accommodate the TMP and associated plans described in this section as set forth in Section 19 (*Intelligent Transportation Systems)*.

For all TTCPs involving Construction Closures and lane shifts for the I-15 and US 95/I-515 corridors, Design-Builder shall provide the Department with specific details defining the appropriate location for Construction ATM System message for each gantry. The FAST message library shall be used. Use of the Construction ATM system during Construction Work shall follow the Operational Scenarios outlined in the ATM Concept of Operations.

12.4.8 Guide Signing

Design-Builder shall provide guide signing to accommodate the TMP and associated plans described in this Section 12.4.8. Design-Builder shall leave all applicable advance guide signs and/or exit direction signs in place at all times and shall not obstruct the view of the signs to the motorist. Design-Builder shall replace any other removed signs before the end of the work day. Design-Builder shall ensure that signs are clearly visible, provide clear direction and information for users, and comply with all applicable MUTCD requirements and Project Standards. Design-Build shall maintain signing continuity on all active roadways within or intersecting the Project at all times.

12.4.9 Roadway Lighting

Design-Builder shall provide roadway lighting systems to accommodate the TMP and associated Plans described in this Section 12.4.9 equal to or exceeding the lighting systems within the Site as of the Setting Date.

12.4.10 Public Transit

Maintain safe and adequate access to existing bus or transit stops throughout duration of road construction in accordance with the following minimum requirements. Design-Builder shall obtain written consent from the RTC for temporary closure or relocation of public bus stops. Design-Builder shall notify the RTC at least 10 days in advance of the proposed temporary closure or relocation of any bus stop. In addition, Design-Builder shall update RTC weekly of the construction progress and of any anticipated closures or temporary relocation of bus stops (RTC contact: Carl Scarborough (702) 676-1608).

No two consecutive bus stops can be closed at any time. Closure of bus stops at transfer points shall not be permitted; however, bus stops at transfer points can be temporarily relocated with the approval of the RTC. Design-Builder shall maintain pedestrian access to and from open bus stops in conformance with the requirements of the ADA.

No bus stops at transfer points shall be closed during Construction Work. Bus stops at transfer points can, however, be temporarily relocated with the approval of the RTC.

If bus or transit stop is temporarily relocated, the existing bus or transit stop sign panels shall be relocated to temporary bus or transit stops and shall remain until temporary stop is removed. Temporary relocation of sign panels shall conform to Subsection 627.03.05, “Relocation,” of the Uniform Standard Specifications for Public Works Construction Off-Site Improvements as specified in Section 26.3 (*City of Las Vegas Standards*).

12.4.11 Traffic Signal Modifications

Design-Builder shall coordinate all temporary traffic signal modifications, including signal timing changes, with the Department, FAST, and the City of Las Vegas. For any City of Las Vegas signal modifications, contact the City's signal shop at (702) 229-6075 at least 72 hours prior to setup.

12.4.12 Other Projects

Design-Builder shall coordinate Construction Work and TCPs with other construction projects taking place within the freeway corridor vicinity as described in Section 1.2.6 (*Coordination with Other Work*).

12.4.13 Permits

Design-Builder shall obtain any necessary permits from local Governmental Entities for all TTCPs.

12.5 Construction Requirements

Channelizing devices approved for use on the Project are detailed in the Project Standards. Design-Builder shall provide, erect, and maintain channelizing devices, signs, barriers, and other traffic control devices used for MOT in acceptable condition, in accordance with the Project Standards.

Design-Builder shall be responsible for supplying, erecting, and maintaining all flashing arrows and variable message boards necessary to maintain traffic for the Project.

Design-Builder shall maintain fenced control of access for the I-15 and US 95/I-515 corridors at all times throughout the Project. The fence shall be 6 feet high and constructed of chain link fence material. Where the fence is located adjacent to commercial businesses, install a fabric material to screen visual sight of the Construction Work. Maintain the fence in accordance with Section 20 (*Maintenance Requirements*).

Design-Builder shall not use local streets through residential neighborhoods for access to the Site. Appropriate MOT and flagging procedures shall be followed during all Construction Work, including mobilization and demobilization activities. Deliveries and hauling to and from the construction Site shall be confined to the Project ROW and performed via approved haul routes along the Project alignment.

12.5.1 Construction Access and Haul Routes

Design-Builder shall be responsible for all needed construction and haul routes required for the delivery of fill, asphalt, concrete, bridge girders, and all other materials required for the Project and shall obtain, pay for, and comply with the conditions of all necessary Governmental Approvals from the appropriate Governmental Entities for temporary roadways, including Construction Work and, as applicable, haul routes.

Design-Builder will only be allowed to use local streets through residential neighborhoods for the following activities after obtaining any required approvals from the local jurisdiction:

- Local roadway improvements and associated Construction Work
- Utility Adjustments

As part of the TMP, Design-Builder shall develop an access and mobility plan depicting haul routes and access. The access and mobility plan shall depict how deliveries and hauling to and from the Project shall be performed via haul routes as permitted by the Department and the entity owning the haul route. Movement of materials from one location to another within the Project ROW shall be confined to the Project ROW and performed via haul routes, as permitted by the Department and the entity owning the haul route.

Project construction vehicles used by Design-Builder shall comply with any and all vehicle registration, load restrictions, and vehicle delineation requirements when used on roads open to the public.

Design-Builder shall not use residential neighborhoods as staging areas for Construction equipment, material staging, or stockpiling. Construction equipment shall always be stored in locations that do not pose a safety or health risk to the traveling public and adjacent neighborhoods. Construction equipment shall be stored either behind barriers or outside of the clear zone. Construction equipment shall be stored outside of sidewalks and bike lanes/paths that are open to traffic.

12.5.2 Notification and Coordination

Design-Builder shall actively assist the Department's Public Involvement Plan Manager in providing advance information to the public regarding construction phasing, detour routes, and expected travel impacts. Design-Builder shall provide appropriate exhibits, fact sheets, articles, etc., as described in Section 6 (*Public Involvement*).

The MOT Manager shall notify the Department at least 14 days before the start of any construction activities that would affect traffic operations, including but not limited to the placement or relocation of Work zone signs.

Design-Builder shall notify police and fire departments having jurisdiction over the Project when traffic patterns are to be altered by construction operations. Design-Builder shall give the notice in writing with a copy to the Department at least 48 hours in advance of affecting public traffic, identifying the traffic pattern to be affected and the expected duration of the change, together with any additional information that will contribute to public safety.

Design-Builder shall notify local public bus operators and transit providers, such as, but not limited to, the Clark County School District and the RTC, when traffic patterns are to be altered by construction operations. Design-Builder shall give the notice in writing with a copy to the Department at least 48 hours in advance of affecting public traffic, identifying the traffic pattern to be affected and the expected duration of the change, together with any additional information that will contribute to public safety.

When street parking will be impacted by Construction, 72 hours prior to commencement of Construction, Design-Builder shall notify all property owners and/or businesses which will be affected by Construction operations and install "No Parking" signs at no more than 250-foot intervals along each side of the road where vehicle removal is required. When personal notification of all affected property owners and/or businesses is not possible, Design-Builder shall reproduce and distribute written notification in the form of a leaflet, door-hanger, flyer or other suitable format to each residence or business affected. The notification shall contain date(s) and time(s) of Construction, a brief explanation of the Work to be performed, vehicle removal instructions, Design-Builder's business address and 24-hour telephone number of the Design-

Builder's designated contact person. Any written communications shall be submitted for Department approval at least 14 days prior to commencement of Construction operations having an impact on street parking.

Throughout the duration of the Construction Work, the MOT Manager shall notify the Department and the others listed in the TMP and this Section 12 in writing of all traffic restrictions and upcoming MOT changes. Design-Builder shall provide written notification in accordance with the requirements listed in Table 12-1. This notification shall be received by the Department before the physical setup of any applicable signs or message boards.

Information shall include, but is not limited to, all construction activities that affect or interfere with traffic, and shall list the specific location, type of Work, road status, date and time of restriction, duration of restriction, number of lanes maintained, detour routes if applicable, and any other information requested by the Department. A summary of the notification time and requirements for closures and restrictions is provided in Table 12-1.

Table 12-1 Road and Lane Restriction Notification Requirements

Item	Duration of Closure	Notification Timeframe
Ramp and Road Closures	>+=2 weeks	14 Business Days before closure
	<2 weeks	7 Business Days before closure
Lane Closure/Restrictions	>=2 weeks	7 Business Days before closure
	<2 weeks	3 Business Days before closure

Any unforeseen conditions not specified in the MOT Plans or TTCPs requiring traffic restrictions shall also be reported to the Department using Table 12-1.

12.5.3 Traffic Control Inspections and Records

The TCS and/or qualified designee shall inspect all traffic control devices at least four times daily: before starting Work, at mid-shift, 30 minutes after the end of the shift, and one additional time during nonworking hours. The time for nonworking hour inspections shall be equally spaced for the period. The TCS shall also perform nightly inspections of the traffic control devices. Additional inspections may be required during Project activities that occur at night.

The TCS shall make a daily record of traffic control activities using the Department daily construction reports, Form #040-056. Design-Builder shall submit completed forms within 24 hours. Photographs may be used to supplement the written text. Design-Builder shall make the daily record available at all times for inspection by the Department.

12.6 Submittals

Submittals will include, as a minimum, the documents identified below for each stage of design development. Design-Builder shall provide submittals as set forth in Section 3 (*Design Quality Management*). In addition, Submittals will include, but are not limited to, the Design Documents identified below and in this Section 12 for each stage of design development.

Design submittals for all TTCPs shall be detailed to the level and standards defined in the NDOT *Road Design Guide*, 2010 Edition (Section 7.22 Traffic Control).

12.6.1 Stage 1 Design

In addition to the required Submittals described in Section 3.9.1 (*Stage 1 Design*), Design-Builder shall submit the following:

- TMP update and resubmittal in accordance with Section 1.5 (*Project Management Plan)*, including but not limited to TTCPs and the construction access and haul routes plan.

12.6.2 Stage 2 Design

In addition to the required Submittals described in Section 3.9.2 (*Stage 2 Design*), Design-Builder shall submit the following:

- TMP update and resubmittal in accordance with Section 1.5 (*Project Management Plan)*, including but not limited to TTCPs, the construction access and haul routes plan, and LCR forms.

Design-Builder's TTCPs shall show Construction Stage(s) including the sequence of operation, Work to be performed, and the traveled way to be used for all movements of traffic during each construction phase. TTCPs shall include bike and pedestrian access routes and shall show detours, phasing sequences, staging areas, and traffic operations. The Work zones shall be clearly delineated. The TTCPs also shall include temporary drainage, temporary signing, temporary striping, pavement widening, and temporary lighting requirements. Modifications of existing traffic signals or installation of temporary signals shall be shown for each stage of construction. Design-Builder shall show all traffic control devices, including but not limited to construction signs, alterations to permanent signs and special sign details, drums and/or cones, barricades, traffic barriers and crash cushions, arrow boards, signal systems and DMSs, flagger stations and uniformed traffic control officers, and pavement markings.

12.6.3 Released-for-Construction Design

In addition to the required Submittals described in Section 3.9.3 (*Released-for-Construction Design*), Design-Builder shall submit the following:

- TMP update and resubmittal in accordance with Section 1.5 (*Project Management Plan)*, including but not limited to TTCPs, the construction access and haul routes plan, and LCR forms.

- Daily record of traffic control activities; Form #040-056.

12.6.4 Final Design

Refer to Section 3.9.4 (*Final Design*).

12.6.5 Working Drawings

Refer to Section 3.10 (*Working Drawings*).

12.6.6 Record Drawings

Refer to Section 3.11 (*Record Drawings*).

This page intentionally left blank.

13 GEOTECHNICAL

13.1 General

These Technical Provisions cover the design and construction of geotechnical infrastructure improvements as categorized in Section 1.1 (*Project Categories and Limits*), and includes references to soil investigations, laboratory testing results, geotechnical reports, instrumentation, analysis and design recommendations, and construction monitoring. The design and construction of all geotechnical facilities and components shall provide functionality, durability, ease of maintenance, safety, and aesthetics.

Design-Builder shall conduct all geotechnical Work and reporting in accordance with the AASHTO *LRFD Bridge Design Specifications*. Design-Builder shall be solely responsible for conducting the required geotechnical investigations and preparing all geotechnical reports and recommendations.

The Geotechnical Data Report, which contains the preliminary geotechnical data obtained by the Department for this Work, is included in the RIDs. See Section 1.9 in the Contract for information regarding use of the RIDs.

Design-Builder shall form its own interpretation of the existing geotechnical data, including as to its suitability and sufficiency, as well as the form and nature of the subsurface conditions that may affect Design-Builder's detailed design, construction methods, and equipment.

Design-Builder shall conduct sufficient research and additional investigation as necessary to verify and, as applicable, supplement the available information such that it is sufficient, reliable, and accurate to design and construct the Work.

As required, Design-Builder shall conduct supplemental subsurface explorations, testing, and analyses for all geotechnical components of the Project in accordance with all applicable criteria and Project Standards cited herein, and in accordance with these Technical Provisions.

13.2 Standards and References

Design-Builder shall design and construct Work for the Project in accordance with the applicable requirements of the Contract Documents, including Project Standards shown in Section 26 (*Standards and References*), specific standards defined in this Section 13, Governmental Approvals, and applicable Government Rules.

13.3 Design Requirements

13.3.1 Geotechnical Subsurface Exploration

13.3.1.1 Preliminary Subsurface Data

A preliminary subsurface investigation has been completed to provide site characterization for the Project. The related reports are included with the RIDs and are titled as follows:

- CH2M HILL. 2014. *Geotechnical Data Report, Project NeonP3 Phase, Las Vegas, Nevada.* Prepared for Nevada Department of Transportation. May.

- CH2M HILL. 2014. *Geotechnical Data Report, Addendum 1, Project Neon-P3 Phase, Las Vegas, Nevada.* Prepared for Nevada Department of Transportation. July.

THE DEPARTMENT WILL PROVIDE ADDITIONAL GEOTECHNICAL BORING DATA WHEN COMPLETED

The preliminary subsurface investigations consist of hollow-stem auger (HSA) and rotary wash borings, shear wave velocity measurements, pressuremeter testing, laboratory testing, and groundwater monitoring data.

13.3.1.2 Design-Builder's Subsurface Exploration

If Design-Builder determines that additional geotechnical data are necessary to complete the Work, Design-Builder shall implement a subsurface exploration and testing program. The supplemental investigation shall include all field and laboratory testing necessary to establish the geotechnical conditions and to perform all geotechnical and foundation design and analyses.

The program, herein designated as Design-Builder's subsurface exploration program, shall be developed and implemented to obtain the data as required to meet Project Standards and Design-Builder's design approach and construction methods. Design-Builder's subsurface exploration program, including the location, number, depth, type of boreholes, field testing and sampling, and laboratory testing shall conform to the Project Standards.

The details of Design-Builder's subsurface exploration program to be used for Design Work shall be submitted to the Department as a Geotechnical Subsurface Exploration Planning Memorandum for review and comment by the Department. The rationale for the development of the exploration program, data interpretation, and parameter selection, together with descriptions of the methods of analyses, shall be presented. The Department's review and comments on the Geotechnical Subsurface Exploration Planning Memorandum will indicate only that it conforms to the minimum requirements of the Project Standards. Design-Builder shall maintain full responsibility for ensuring that the subsurface exploration program is sufficient to design and construct the Work. The Department will review and comment on Design-Builder's subsurface exploration program before its implementation. Design-Builder shall perform its subsurface exploration program to establish all geotechnical parameters and subsurface conditions required for the Work. Design-Builder shall provide the results of the studies in Geotechnical Design Planning Memoranda to the Department for information. The minimum requirements for layout and the depth of exploration points for structures shall be in accordance with the AASHTO *LRFD Bridge Design Specifications* and with the FHWA manual on subsurface investigations.

If Design-Builder determines that additional exploration work is necessary to support Design-Builder's design and construction, Design-Builder shall meet the following requirements for the subsurface investigation and laboratory testing to be performed for the Project:

1. Supervision and Inspection.

    a. All field investigations and laboratory testing shall be performed under the direct supervision of a Registered Professional Engineer with a minimum of 5 years of experience in the performance and supervision of geotechnical engineering projects.

    b. All geophysical investigations shall be planned and performed under the direct supervision of a geophysicist with a minimum of 10 years of experience.

c. All boring and in situ testing inspection shall be performed by field inspectors who are degreed engineers or geologists and who have a minimum of 2 years of field experience in the inspection and reporting of field sampling and testing of similar size and content.

2. Location and Ground Surface Elevation. Design-Builder shall determine the coordinate location, station, and offset from the mainline and ground surface elevation for each boring and other test probes and show the information on the individual boring logs.

3. Soil classification shall be performed in accordance with the Unified Soil Classification System (USCS).

4. Final boring logs shall be prepared and presented using gINT or similar software and shall be similar in appearance to, and include all the information contained in, current Department geotechnical boring logs.

5. The soil samples obtained by Design-Builder for the supplemental subsurface investigation shall be retained until Substantial Completion.

6. Borings shall be sealed in accordance with borehole plugging guidelines provided in regulations for water well and related drilling, 2011 NRS related to underground water and wells, and completed at the surface to match the pre-drilling condition.

13.3.1.3 Laboratory Testing

Laboratory tests shall be performed to quantify material properties and verify design assumptions in accordance with the AASHTO *LRFD Bridge Design Specifications*. All standard soil and rock sample laboratory testing shall be performed in accordance with the Department's *Materials Division Testing Manual*. AASHTO test designation shall be used for test that are not covered by the Department's *Materials Division Testing Manual*.

All laboratory testing shall be performed by laboratories with AASHTO Materials Reference Laboratory Certification for each specific test performed. The compaction testing shall be performed in accordance with Test Method Nev. T108 (Method of Test for the Determination of Maximum Density and Optimum Moisture Content of Soil Using the Modified Proctor Device).

13.3.2 Geotechnical Design

13.3.2.1 Geotechnical Design Planning Memoranda

Design-Builder shall prepare Geotechnical Design Planning Memoranda for each design element or groups of design elements based on the Work priority and, as applicable, sequence of construction and submit them to the Department for review and comments.

The memoranda shall include a detailed method statement describing the general philosophy and methods of investigation, preliminary design and analysis, and the selection of the anticipated means of construction for the included design elements. The method statement shall indicate how material and design details are chosen to match selected construction methods and construction details and the soil, and groundwater environment for the site. For each Geotechnical Design Planning Memorandum, Design-Builder shall include the following technical information, as a minimum:

1. Description of geology and various ground types to be encountered for each design element or group of design elements along the alignment.

2. A description of the geotechnical information that was collected and analyzed in developing Design-Builder's Geotechnical Design Planning Memorandum.

3. Assessment of the engineering properties of all soil types, including the expected average and range of soil strengths and deformation properties and the preliminary design parameters for all soil types relative to the design element or group of design elements.

4. A narrative describing the interpretation of the pertinent geotechnical data used as a basis for preliminary selection, design, and installation of the proposed foundation elements.

5. A description of the planned supplemental subsurface investigation if any are planned.

6. A description of the investigation, engineering, and design approach that will be followed to develop the most technically and environmentally acceptable and durable foundations, cut-and-fill slopes, retaining structures, pavements, stormwater management facilities, and geotechnical designs for the elements included in the Geotechnical Planning Memorandum.

13.3.2.2 Design of Bridge Foundations

The criteria set forth herein shall pertain to the geotechnical and foundation design and shall conform to the AASHTO *LRFD Bridge Design Specifications*.

A deep foundation shall be used where a shallow foundation cannot be designed to carry the applied loads within the allowable settlement or displacements. Deep foundations shall also be used where scour, erosion, or unacceptable settlement might occur.

Design-Builder shall design bridge widenings and modifications to existing bridges in accordance with the AASHTO *Standard Specifications for Highway Bridges*, 17th Edition. Design-Builder shall use strength design (load factor design) methodology for all designs based on the AASHTO *Standard Specifications for Highway Bridges*, 17th Edition.

Refer to Section 14 (*Structures*) for material requirements and the structural design requirements of foundation elements.

13.3.2.3 Shallow Foundations

Shallow foundations shall be designed in accordance with AASHTO *LRFD Bridge Design Specifications* for new structures and AASHTO *Standard Specifications for Highway Bridges*, 17th Edition for bridge widenings and modifications to existing bridges.

1. Shallow foundations shall include spread footings for isolated columns, combined footings for supporting the load from more than one structural unit, strip footings, and mats or raft foundations beneath an entire structure area.

2. Shallow foundations may be used where there is a suitable bearing stratum near the surface and where there are no highly compressible layers or soils susceptible to collapse or expansion below. Shallow foundations shall not be placed in the reinforced portion of MSE abutments. Foundation design shall accommodate potentially detrimental substances in soil or groundwater, including but not limited to chlorides and sulfates.

3. The effects of adjacent foundations, variable groundwater conditions, and surcharge loads shall be accommodated when evaluating foundation settlements and bearing capacity.

4. If a shallow foundation is founded on a caliche bearing stratum, additional subsurface investigation shall be performed to adequately characterize the stratum's properties, such as thickness and strength.

13.3.2.3.1 Bearing Capacity

Shallow foundations shall be analyzed for bearing capacity to confirm that the underlying soil can resist the footing loads without bearing capacity failure.

13.3.2.3.2 Settlement

Analyses shall be conducted to estimate the total and differential soil settlement induced by the foundation loads. Immediate settlements for granular soils and immediate, primary, and secondary consolidation settlements for cohesive soils shall be accommodated.

13.3.2.3.3 External Stability

Shallow foundations shall be analyzed and constructed for external stability. External stability analyses shall include analysis of overturning, sliding, eccentricity, and global failures. Shallow foundations shall be designed such that the resultant load falls within the middle third of the foundation.

13.3.2.4 Deep Foundations

Deep foundations shall be designed in accordance with AASHTO LRFD Bridge Design Specifications for new structures and AASHTO Standard Specifications for Highway Bridges, 17th Edition for bridge widenings and modifications to existing bridges.

1. Deep foundations may include steel driven piles and drilled shafts.

2. Timber piles, precast prestressed concrete piles, auger cast in place piles, steel drilled piles, screw piles, and existing foundations shall not be considered for use on the Project.

3. When designing deep foundations, design and construction shall provide accommodations to minimize the level of construction noise and the radius of influence from construction vibrations.

4. Piles shall be designed to account for all static and cyclic loads, including load reversals, and shall include an appropriate reduction factor to the nominal resistance of the pile or pile group to account for load reversal.

13.3.2.4.1 Axial Capacity

Deep foundations shall be analyzed for axial capacity. The resistance factors shall be verified by supplemental field tests, as determined appropriate by Design-Builder's geotechnical engineer. Load tests may include static, statnamic, and dynamic load tests, as appropriate for the foundation type and soil conditions. Design-Builder shall perform load tests if higher resistance factors are used in the pile design in accordance with the AASHTO *LRFD Bridge Design Specifications.* Load tests shall be performed in accordance with the AASHTO *LRFD Bridge Design Specifications* as

well as relevant ASTM International load testing standards. Design-Builder shall submit the details of the load test program for the Department's review and comment before its implementation.

13.3.2.4.2 Group Spacing and Performance

The design of deep foundations shall consider material properties of the penetrated strata, type of foundation, and group effects due to the spacing of foundation elements.

13.3.2.4.3 Settlement

The design of deep foundations shall accommodate the total and differential settlement caused by the structure loads. The settlement of individual deep foundation elements and of pile groups shall be estimated.

13.3.2.4.4 Downdrag (Negative Skin Friction)

The design of deep foundations shall accommodate the effect of negative skin friction from existing ongoing ground settlement, construction dewatering, variable groundwater conditions, the placement of fill or embankments, liquefaction settlement, or pile installation. Downdrag loads shall be determined by accounting for the load transfer distribution along the deep foundation element as well as the group layout.

To reduce downdrag forces, corrugated metal sleeves may be used.

13.3.2.4.5 Lateral Load Capacity

Deep foundations shall be designed to adequately resist the lateral loads transferred to them from the structure without exceeding the allowable deformation of the structure or overstressing the foundation elements. The allowable lateral deformations shall be in accordance with AASHTO *LRFD Bridge Design Specifications*.

The lateral load resistance of the individual and group of deep foundation elements shall be analyzed and included in the design. The analysis shall accommodate non-linear soil pressure-displacement relationships, soil/structure interaction, group action, groundwater, and cyclic and static and dynamic load conditions. The deep foundation performance evaluation shall include the determination of vertical and horizontal movements, rotation, axial load, shear, and bending moment for the foundation elements and the bending stresses in batter piles due to the weight of settling soils. Equivalent points of fixity shall be determined using the equivalent stiffness method accounting for the soil-structure p-y stiffness and the equivalent fixed end method.

13.3.2.5 Design of Retaining Walls and Retaining Wall Foundations in Fill

Design-Builder shall design retaining walls and retaining wall foundations in fill in accordance with AASHTO *LRFD Bridge Design Specifications*. Refer to Section 14 (*Structures*) for design criteria of retaining walls. MSE retaining walls shall have a minimum design life of 100 years. Rockery and gabion walls shall not be used as permanent retaining walls except as allowed under Section 5 (*Landscape and Aesthetics*) and Section 14 (*Structures*).

13.3.2.5.1 Vertical Loads

The loads used in the design of permanent Work shall be in accordance with the requirements of the relevant Project Standards, except as otherwise modified or augmented herein.

13.3.2.5.2 Lateral Earth Pressure

The design of the retaining structures shall be based on the maximum lateral pressures that will develop behind the structures.

Loads due to soils or backfill shall be derived using the maximum values of the saturated densities. Only where it can be clearly demonstrated that the fill is well-drained, and will remain well drained in the future, shall any reduction in the degree of saturation may be allowed. The submerged densities shall be used for soil unless the location is above the highest seasonal water table.

Hydrostatic pressure induced by the groundwater table, when present, shall be included in the lateral pressures. Additional hydrostatic pressures and variations in groundwater conditions due to drainage, flooding, and rapid drawdown conditions shall be accommodated in the design of retaining structures.

13.3.2.5.3 Shallow Foundations

Shallow foundations for retaining walls shall be designed to maintain wall settlements (total and differential) within the service limits of the structure. MSE walls shall be designed to maintain wall settlements (total and differential) within the applicable tolerances specified in FHWA's *Design and Construction of Mechanically Stabilized Earth Walls and Reinforced Soil Slopes.*

13.3.2.5.4 External and Internal Stability

The external and internal stability shall be in accordance with the requirements of the relevant Project Standards.

13.3.2.5.5 Deep Foundations

Deep foundations for retaining walls shall be designed in accordance with Section 13.3.2.4 (*Deep Foundations*).

13.3.2.6 Design of Top-Down Retaining Walls (Walls in Cut)

Top-down retaining walls shall include steel sheet-piling, tangent or secant pile systems, soldier pile and lagging, soil nails, slurry walls, and ground anchored wall systems. Refer to Section 5 (*Landscape and Aesthetics*) for aesthetic surface finishing requirements.

For requirements related to loading, stability, and drainage, refer to Section 13.3.2.5 (*Design of Retaining Walls and Retaining Wall Foundations in Fill*).

Where soil nail, tie-backs, or ground anchors are required for the resistance of lateral loads, they shall be designed in accordance with either FHWA *Geotechnical Engineering Circular No. 7: Soil Nail Walls* or *Geotechnical Engineering Circular No. 4: Ground Anchors and Anchored Systems.* Hollow-bar shall not be used for soil nail wall system.

13.3.2.7 Design of Fill Embankments

13.3.2.7.1 Slope Stability

The analyses, design, and construction of soil embankment side slopes shall accommodate the effects of deterioration and loss of soil resistance due to local climatic and construction conditions, and the natural shrink/swell tendencies of the geologic materials of which they are constructed. All slopes shall be designed to minimize erosion by rainfall and runoff. Adequate drainage and erosion control provisions shall be incorporated in the design and construction of the embankments.

Design-Builder shall dispose of onsite excavated materials that have an R-value of less than 25, or that have other deleterious properties. Excavated materials from existing embankments and/or onsite native soils having an R-value of 25 or higher can be used in the lower portion of new embankments when separated from the bottom of the aggregate base by a minimum of 5 feet of borrow or onsite excavated materials having an R-value of 45 or higher. Onsite excavated materials having an R-value of 45 or higher can be used to construct embankments. All imported soils used to construct the embankments must have an R-value of 45 or higher.

Design-Builder shall design new embankment fill to meet minimum factor of safety for embankment slopes and maximum settlement necessary for rideability and serviceability. Soil property values shall be used for in situ fills where design can be based on testing of the actual material. Design-Builder shall design and construct all embankment slopes at 2H:1V or flatter, except where Reinforced Soil Slopes (RSS) are used.

Slope stability analyses shall be conducted using a computer program specified in the Project Standards. Each embankment configuration and slope shall be analyzed for potential circular and wedge type failures. If established by Design-Builder's geotechnical engineer, slope stability analyses is not required for 2H:1V slopes with less than 5 feet in height. The evaluation of global slope stability shall accommodate potential seepage forces, water infiltration, surficial water runoff, and any weak deposits and seams that are adversely affected by water flow. A minimum safety factor of 1.5 shall be provided under static loads for permanent embankment slopes for both global stability and surficial (shallow) stability analyses. A minimum safety factor of 1.1 shall be provided under pseudostatic loads for the permanent embankment slopes.

Design-Builder shall coordinate landscape features to account for landscaping, revegetation, and, as applicable to address potential adverse impacts and reductions in the factor of safety for fill embankment slopes for the as-built condition. At these locations, Design-Builder's geotechnical engineer shall perform site-specific global stability studies for the landscaping condition, which may require pre-emptive measures such as localized areas of reinforcement and, as applicable, localized areas with buttressing at the toe of slope to maintain the required factors of safety.

13.3.2.7.2 Settlement

Analyses shall be conducted to estimate the soil settlement induced by the embankment loads. Immediate settlement in granular soils and both immediate and consolidation settlements in cohesive soils shall be accommodated. Embankments shall be designed to keep estimated total long-term differential settlements less than the tolerable settlement to avoid damage to pavements after the completion of the pavement construction. For embankments supporting pavement and bridge approach fill, the maximum settlement shall be less than 0.25 inch per 12-foot lane width in transverse direction, 0.25 inch per 30 feet in longitudinal direction, and

2 inches of total post-construction settlement. For soft-ground situations, refer to Section 13.3.2.8 (*Design of Onsite Soil Improvement*).

13.3.2.8 Design of Onsite Soil Improvement

The use of soil improvement techniques to increase soil strength and reduce compressibility in order to increase the safety factors for external and internal stability and reduce settlements to the allowable range will be allowed in the design. Design-Builder shall demonstrate the suitability of the proposed method(s) for local conditions.

All soil improvement systems shall be designed using current practices and procedures. The performance of all ground improvement techniques shall be verified with a preproduction field testing program. The testing program shall be developed to demonstrate that the proposed methods and design will provide sufficient ground improvement to satisfy the specified performance requirements.

13.3.2.9 Alternative Embankment Materials

Alternative embankment materials for reducing load and settlement may be considered for use on the Project. Design-Builder shall demonstrate that any alternative materials used are designed in accordance with current practices and procedures, and comply with all environmental compliance requirements set forth in the Contract Documents, Governmental Approvals, and applicable Environmental Laws.

13.3.2.10 Design of Reinforced Soil Slopes

Where reinforced soil slopes (RSS) are approved by the Department for reducing impacts to adjacent properties and, as applicable, other natural resources, the design procedures and performance requirements shall conform to the requirements of FHWA *Design and Construction of Mechanically Stabilized Earth Walls and Reinforced Soil Slopes*.

No specific AASHTO LRFD guidance on performance criteria is presently available for RSS structures. Therefore, the design procedures and performance requirements for RSS shall be as presented in the allowable stress design version of FHWA *Design and Construction of Mechanically Stabilized Earth Walls and Reinforced Soil Slopes*. This shall include adequate drainage provisions, slope protection, and erosion control provisions.

13.3.2.11 Design of Permanent Cut Slopes

Geotechnical analyses of soil cut slopes shall be performed to assess soil slope stability along new and existing roadway cuts. Potential circular and wedge type failure modes shall be analyzed for each soil cut and each slope and orientation. A geotechnical analysis of cut slopes shall be performed using an appropriate slope stability computer program. Permanent soil cut slopes shall be no steeper than 2H:1V with a minimum factor of safety of 1.5 under static loading conditions and 1.1 for pseudostatic loading conditions, except where soil reinforcement methods, such as soil nails or other stabilization methods are used.

13.3.2.12 Design of Ground-Mounted Noise Barrier and Concrete Wall Foundations

Foundations for ground-mounted noise barriers and concrete walls may be shallow or deep as appropriate for the soil conditions. Refer to Section 13.3.2.4 (*Deep Foundations*) for the design

requirements of deep foundations and to Section 13.3.2.3 (*Shallow Foundations*) for the design requirements of shallow foundations.

13.3.2.13 Design of Foundations for Traffic and Intelligent Transportation System Structures

Refer to Section 13.3.2.4 (*Deep Foundations*) and AASHTO *Standard Specifications for Structural Supports for Highway Signs, Luminaires, and Traffic Signals* for design requirements for deep foundations for sign structures, light poles, and all other ancillary ITS including but not limited to cameras, cabinets, and traffic poles. Refer to Section 13.3.2.3 (*Shallow Foundations*) for the design requirements for shallow foundations.

13.3.3 Interim Design Memorandum

Design-Builder shall prepare an Interim Design Memorandum for each design element or group of design elements that is consistent with the Geotechnical Design Planning Memoranda. Interim Design Memoranda shall be prepared and provided to the Department for review and comment with the Stage 2 Design submission. Each Interim Design Memorandum shall be submitted in accordance with the Project Standards, including in PDF format, and shall include the following, at a minimum:

- Description of the design elements included in the memorandum
- Locations of borings, geophysical testing, and other in situ testing
- Field testing procedures
- Final typed boring logs updated with laboratory testing results
- Results of any in situ testing and geophysical testing
- A description of subsurface conditions, including groundwater, and subsurface profiles
- Results of laboratory tests
- Values assigned to soil parameters for design
- Descriptions of pertinent geotechnical analyses and designs
- Conclusions and recommendations for the specific design elements
- Construction considerations such as vibration monitoring
- Instrumentation and monitoring requirements

13.4 Construction

Design-Builder shall provide geotechnical construction inspection and testing services as needed to provide functionality, durability, ease of maintenance, safety, long-term serviceability, and aesthetics for the Project. In addition to ensuring the quality of the Work, geotechnical construction inspection and testing services shall be used by Design-Builder to avoid or minimize damage arising from or related to the Work to adjacent properties and within the Project ROW. Design-Builder shall be responsible for any and all damage (including but not limited to settlement and vibrations) to property, structures, roadway pavements, or Utilities, both inside and outside of the Project ROW, caused by the Work on the Project, and shall appropriately mitigate for these damages, and repair any damage caused by, arising out of, or related to Design-Builder's Work.

13.4.1 Temporary Support of Excavation

Temporary support of excavation shall be designed in accordance with all applicable OSHA standards and AASHTO requirements. Design-Builder shall complete detailed design of all components and submit them for the Department's review.

13.4.2 Utilities

Design-Builder shall identify all new and existing Utilities crossing embankments, evaluate settlement impacts on these lines, and evaluate the impacts of abandoned and/or dormant lines on settlements.

Refer to Section 18 (*Utilities*) for Utilities design and abandonment requirements.

13.4.3 Construction of Bridge and Retaining Wall Foundations

Ground consolidation, existing structure settlements, and disturbance to local residents due to the installation of deep foundations shall be maintained within limits required by applicable Government Rules.

13.4.3.1 Shallow Foundations

After excavation, Design-Builder's geotechnical engineer shall verify that the exposed subgrade is suitable for the calculated toe-pressures exerted by the proposed abutment or fill-type retaining wall. The Subgrade Verification Document shall be submitted for the Department's information.

13.4.3.2 Driven Pile Foundation Testing and Monitoring

Field testing shall be performed for driven pile foundations to evaluate foundation capacity and integrity, verify design assumptions, determine foundation installation characteristics, evaluate the pile-driving system performance, and establish foundation depths. The driven pile foundation testing and monitoring shall include all necessary QC testing, including test piles or shafts, dynamic testing, static load testing, statnamic testing, and non-destructive integrity testing as appropriate for the foundation type.

At least 30 working days before driving piles, Design-Builder shall submit to the Department for review and comment the results of wave equation analysis of piles (WEAP) on the hammer-pile-soil systems proposed for the Project. WEAP shall be performed for all hammers proposed for use and for each design element with driven pile foundations.

A pile-driving analyzer (PDA) shall be used to determine if each hammer is delivering the energy required by the WEAP. All PDA equipment, testing, recording, and reporting shall be performed in accordance with ASTM D4945, *Standard Test Method for High Strain Dynamic Testing of Piles*. The Case Pile Wave Analysis Program (CAPWAP) shall be used to determine the as-built pile capacity from the PDA data. At a minimum, the first pile driven for each substructure unit shall be a PDA test pile.

At least 30 days before constructing deep foundations, Design-Builder shall prepare and submit to the Department a detailed description of the proposed driven pile foundation testing and monitoring programs for review and comment. The description shall include detailed specifications and plans presenting the foundation type, test type, purpose, number, location, and

procedures for each test, and the recording and reporting procedures. The testing and monitoring of deep foundations shall be in accordance with the applicable ASTM and AASHTO specifications.

Static load tests performed on piles or drilled shafts shall be in accordance with the ASTM D1143 or AASHTO specifications. Design-Builder may also submit to the Department for its review the use of Statnamic Testing arrangement. Load tests shall be performed at locations representative of the different subsurface conditions, foundation types, foundation capacities, and foundation depths in accordance with the AASHTO *LRFD Bridge Design Specifications*. At least 30 working days before driving load-test piles, Design-Builder shall submit to the Department for review and comment the proposed configuration for pile load tests, including the structural calculations for the reaction beam, piles, and connections; calibration results for the loading jack, load cell, and gauges before the tests; and other pertinent details.

All foundation field-testing results shall be compared with the design capacity and proposed resistance factors. Where field-testing results reflect a lower-than-required resistance, Design-Builder shall prepare a Remedial Action Plan to be submitted with Released-for-Construction Design Documents for Design Review.

13.4.3.3 Drilled Shaft Construction and Integrity Testing

The drilled shaft construction shall follow the Department's Standard Specifications and the Project Standards defined in Section 26 (*Standards and References*) and FHWA *Drilled Shafts: Construction Procedures and LRFD Design Methods*. Design-Builder shall assign one full-time inspector for each drilled shaft installation rig in use for bridges, retaining walls, and other critical structures. At least 30 working days before drilled shaft installation, Design-Builder shall submit the qualifications for each proposed Drilled Shaft Inspector.

The Drilled Shaft Inspector shall work under the direct supervision of Registered Professional Engineer with a minimum of 5 years' experience in drilled shafts construction.

Integrity testing consisting of ASTM D6760 Crosshole Sonic Logging (CSL) shall be performed on all drilled shaft foundations for bridges and on other drilled shafts as determined by Design-Builder's geotechnical engineer. Design-Builder shall provide the number of CSL tubes shown in the table below for each drilled shaft diameter:

Drilled Shaft Diameter (feet)	3	3.5	4	5	6	7	8	9	10	11	12
Number of CSL Tubes	3	3	3	4	5	6	7	8	9	10	11

The CSL Test Provider and CSL Test Lead Engineer shall meet the minimum qualifications provided under Section 1.6.4 (*Lead Personnel Qualifications*). Based on the installation and testing data, Design-Builder's geotechnical engineer shall validate that the drilled shafts were adequately constructed. The drilled shaft validation by Design-Builder's geotechnical engineer shall be submitted for the Department geotechnical engineer's review and comment. If necessary, the Department shall retest the drilled shaft using another CSL test provider to verify the integrity of the drilled shaft. If not adequately constructed, Design-Builder's Responsible Engineer shall recommend an appropriate resolution for review and comment by the Department.

13.4.3.4 Pile Driving Records

Design-Builder shall create and maintain a written record of pile driving. For the entire length of each pile, Design-Builder shall record blows and estimated delivered energy (hydraulic hammers) or stroke (diesel hammers) for each foot of penetration. Design-Builder shall record the start and stop times to the nearest minute and record any stoppages in field pile driving.

Before beginning the placement of reinforcing steel around the piles, and, as applicable, before beginning any backfilling around the piles, Design-Builder shall present to the Department for review and comment on the complete driving records, including tolerance measurements for all piles in each pile group and the PDA and CAPWAP results.

13.4.3.5 Design-Builder's Pile Driving Inspector and Geotechnical Engineer

Design-Builder shall assign one inspector for each pile driving rig in use. At least 30 days before pile driving, Design-Builder shall submit the qualifications of each Pile Driving Inspector to the Department.

Based on the installation and testing data, Design-Builder's geotechnical engineer shall validate that the piles were adequately driven. If not adequately driven, Design-Builder's Responsible Engineer shall recommend an appropriate resolution for review and comment by the Department.

13.4.4 MSE Retaining Wall Construction

MSE retaining walls shall be designed and constructed in accordance with FHWA *Design and Construction of Mechanically Stabilized Earth Walls and Reinforced Soil Slopes*. The MSE backfill shall be tested in accordance with latest revisions to the Department's Standard Specifications and the Project Standards defined in Section 26 (*Standards and References*). Inspection wires shall be installed to record corrosion of galvanized steel used for MSE wall reinforcement.

13.4.4.1 Inspection Wires

Inspection wires shall be made of the same galvanized steel as the soil reinforcements and shall be installed at the same time within the MSE retaining wall fill, but sized small enough to be removed for inspection periodically or when otherwise needed. They shall be located near the center of the precast panels that will still be accessible after final grading and installation of all barriers, fences, signs, etc.

A set of 18 inspection wires shall be required for every MSE section that is at least 100 feet long and equal to or greater than 17 feet high. Sets shall be located approximately 500 feet apart, along the wall face. Design-Builder shall array the wires to roughly cover the surface evenly from top to bottom of the exposed face. In MSE walls that are not large enough to accommodate this typical layout, Design-Builder shall place at least one row of six wires along the wall face.

13.4.4.2 Fill Embankment Construction

Fill embankments shall be constructed in accordance with the Department's Standard Specifications and the Project Standards defined in Section 26 (*Standards and References*). Design-Builder shall submit the source and material properties of all fills proposed for use, including the results of gradation tests, plasticity tests, and R-value tests. All laboratory tests shall be performed in accordance with the appropriate Department test methods. The bearing capacity of the embankment subgrade shall be validated by Design-Builder's geotechnical engineer before

initiating construction. Stormwater sheet flow across the slope face shall not be permitted during construction or for the permanent condition until vegetation or landscape is established on the face of the slopes.

13.4.4.3 Settlement of Embankments

Before proceeding with subsequent construction activities, Design-Builder shall compile and submit to the Department, for review and comment, all settlement data, including analyses demonstrating that settlements have dissipated to the extent required by subsequently constructed facilities. The settlement criteria shall be developed by Design-Builder based on the specific structure design and shall follow the AASHTO *LRFD Bridge Design Specifications*.

13.4.4.4 Embankment Construction near Existing Structures

Where embankments or walls are to be constructed in the vicinity of existing structures, Design-Builder shall develop and implement a program for performing preconstruction surveys and monitoring the movement of structures that shall include the following:

- Estimate the settlement influence zone from embankment and construction loads that includes settlements in excess of 0.50-inch.
- Conduct site reconnaissance to assess the sensitivities of adjacent structures to settlement.
- Identify site-specific facilities that may be adversely affected by settlement.
- Implement procedures to mitigate and compensate property owners affected by settlement/movement resulting from construction activities.

13.4.5 Construction of Top-Down Walls (Cut Walls)

Top-down walls (cut walls) shall be constructed in accordance with the FHWA *Geotechnical Engineering Circular No. 7: Soil Nail Walls* or *Geotechnical Engineering Circular No. 4: Ground Anchors and Anchored Systems*.

13.4.6 Construction of Pavement Subgrades

Design-Builder shall be responsible for construction of a suitable and stable subgrade on which to place the pavement section. The top of subgrade shall be proof-rolled before placing the base course in the pavement section(s). Any movement in the top of subgrade during test-rolling shall be an indication of unstable subgrade or the presence of unsuitable material. Unstable or unsuitable areas shall be treated as recommended in the Geotechnical Design Memorandum. After treatment, the area shall again be test-rolled. Any area still showing movement shall receive additional corrective treatment.

13.5 Submittals

Submittals will include, as a minimum, the documents identified below for each stage of design development. Design-Builder shall provide submittals as set forth in Section 3 (*Design Quality Management*). In addition, Submittals will include, but are not limited to, the Design Documents identified below and in this Section 13 for each stage of design development.

13.5.1 Stage 1 Design

In addition to the required Submittals described in Section 3.9.1 (*Stage 1 Design*), submit the following:

- Geotechnical Subsurface Exploration Planning Memoranda for supplemental field explorations proposed by Design-Builder.
- Geotechnical Design Planning Memoranda for design elements or groups of design elements

The Geotechnical Subsurface Exploration Planning Memorandum shall be prepared in accordance with Section 13.3.1.2 (*Design-Builder's Subsurface Exploration*); the Geotechnical Design Planning Memoranda shall be prepared in accordance with Section 13.3.2.1 (*Geotechnical Design Planning Memoranda*).

13.5.2 Stage 2 Design

In addition to the required Submittals described in Section 3.9.2 (*Stage 2 Design*), submit the following:

- Interim Design Memorandum for design elements or groups of design elements

Interim Design Memorandum shall be prepared in accordance with Section 13.3.3 (*Interim Design Memorandum*).

13.5.3 Released-for-Construction Design

In addition to the required Submittals described in Section 3.9.3 (*Released-for-Construction Design)*, Design-Builder shall submit the following:

13.5.3.1 Geotechnical Instrumentation for Construction

Design-Builder shall prepare and submit monitoring plans to either monitor facilities that may be affected by construction activities or to monitor the field performance of specific construction elements in accordance with the following criteria and requirements:

- The extent of the monitoring program will depend on the size and type of the facilities.
- The type and distribution of instrumentation shall demonstrate an understanding of the need, purpose, and advantages of using each proposed instrument.

The plans shall include consideration of environmental effects such as temperature, rain, sun, wind, corrosion, and electromagnetic wave interference.

Design-Builder shall be responsible for the instrumentation plans, procurement, installation, recording, maintenance, and protection.

The instrumentation plans shall provide construction-related control information and accommodate the collection of long-term performance data.

Test installations may be performed to demonstrate the compliance and acceptability of instrumentation in relation to the requirements of the Contract Documents.

If instruments fail or are damaged, they shall be immediately replaced at no cost to the Department, and Design-Builder's geotechnical engineer may require that all Work cease in the area to be monitored by the instruments until corrective actions are completed.

Monitoring shall be initiated well in advance of construction to establish baseline readings.

The results of vibration measurements shall be used to develop attenuation curves for predicting vibrations at varying distances from the source.

13.5.3.2 Monitoring of Structures for Effects of Construction Activities

Design-Builder shall prepare a Vibration Monitoring Plan, where appropriate, to monitor existing structures or other property, temporary construction support structures, and in-progress construction of permanent structures or other property for effects of construction activities, such as excavation by blasting, pile driving, and nearby construction equipment traffic. The Vibration Monitoring Plan shall be submitted to the Department for review and comment 60 days before beginning construction activities. Monitoring may cover vibrations, ground accelerations, tilt or rotation, and vertical and lateral movement during and after construction. Design-Builder shall prepare a report detailing the proposed program of instrumentation and monitoring, establishing threshold values of monitored parameters, and describing the response plans that will be implemented when threshold parameters are exceeded. After the Department's review and comment on the instrumentation report, threshold values, and response plan, Design-Builder shall provide, install, and monitor the instrumentation during and after construction and interpret the data.

Construction instrumentation monitoring reports shall be submitted to the Department before opening the instrumented Work for subsequent construction. Corrective actions shall be taken where the instrumentation data so warrant.

The Vibration Monitoring Plan shall provide that potentially affected structures or other property are protected against damage caused by construction of the Work. Design-Builder shall establish limiting values of movement (horizontal and vertical), vibration, and acceleration for each facility within the zone of influence of the Work. The limiting values for historic properties and structures or other property shall be based on Good Industry Practice. Records of structures or other property, where available, shall be examined during the design stage and, where no records exist; assessments shall be made and clearly documented. These assessments shall be subject to verification at the start of the construction phase, before the adjacent construction activity.

In addition to the Vibration Monitoring Plan, Design-Builder shall conduct preconstruction and post-construction surveys of existing structures or other property, temporary construction support structures, and new permanent structures or other new property, within 500 feet of Design-Builder's construction activities that may cause ground vibrations, pile driving, and moving construction equipment. The preconstruction and post-construction surveys shall include a detailed photographic log (photographs with descriptions) of the exterior of all structures surveyed.

13.5.3.3 Instrumentation for Monitoring Field Performance of Construction Elements

Design-Builder shall discuss in the Vibration Monitoring Plan, where appropriate, monitoring of the field performance of specific construction elements such as settlement, lateral earth movement, the rotation of structural elements, and changes in groundwater levels. The instrumentation and monitoring program shall employ appropriate types and quantities of monitoring instruments capable of measuring horizontal and vertical movements, tilt/rotation of structural elements, soil pore pressures, and vibrations, as applicable.

Instrumentation that may be used in monitoring programs to control and assist design and construction include but are not limited to the following:

- Piezometers and observation wells
- Inclinometers
- Survey stations on structures and at ground-level locations
- Tiltmeters
- Deep and shallow settlement points and extensometers
- Strain and load-measuring devices
- Seismographs

Design-Builder shall not release monitored elements for subsequent construction until completed monitoring reports have been submitted and approved by the Department.

13.5.4 Final Design

In addition to the required Submittals described in Section 3.9.4 (*Final Design*), submit the following:

13.5.4.1 Final Geotechnical Reports

Design-Builder shall prepare Final Geotechnical Reports for design element or groups of design elements, consistent with the Geotechnical Design Planning Memoranda and the Interim Design Memoranda. The reports shall be submitted to the Department for review and comments before releasing constructed elements for subsequent Work. The final geotechnical reports shall be submitted as hard copies and PDF files. The Final Geotechnical Reports shall include the following, at a minimum:

- The corresponding Geotechnical Design Planning Memorandum
- The corresponding Interim Design Memorandum
- The locations and results of borings, geophysical testing, and other in situ testing
- A detailed description of geological and subsurface conditions for each design element (including a description of site stratigraphy)
- Field investigation procedures
- A description of groundwater conditions
- Results of laboratory tests
- Values assigned to all applicable soil parameters for design

- All pertinent data and complete discussions of all geotechnical analyses and design
- All relevant design calculations and computer program results, checked and initialed by a Registered Professional Engineer
- Conclusions and recommendations for foundation types for structures, embankments, cut slopes, retaining walls, ground improvement, requirements for backfill materials
- Groundwater problems encountered, means of dewatering, and, as applicable, other solutions
- Designs for support of excavation
- Results of instrumentation and monitoring and post-construction monitoring summaries
- Potential settlement problems
- Potential stability problems and analysis results
- Seismic zone Information

For each of the following design elements, Design-Builder shall submit the corresponding listed items with the final geotechnical reports, as a minimum.

1. Foundations:

    a. Individual pile and pile group design calculations, including maximum factored axial and lateral capacity for the pile type, size, and length to achieve the required capacities (including any effects of liquefaction and downdrag)

    b. Estimated pile and pile group settlement

    c. Shallow foundations calculations, including maximum factored bearing resistance, estimated differential and total settlements, and rotations

    d. Calculations of embankment settlement (magnitude and time rate) and downdrag forces on the piles, depths to zero or negligible settlement, and the proposed means to mitigate the downdrag

2. Retaining Walls:

    a. Wall design calculations, including the results of the global and internal stability analyses and analyses of total, differential, and secondary settlements

    b. Calculations for analyses of sliding, overturning, eccentricity, and bearing pressure for live and seismic loadings

3. Embankments:

    a. The results of the slope stability analyses, including external loading from live and seismic loading, the recommended side slopes of all embankments

    b. The results of settlement analyses, including predictions of the magnitude and duration of primary, secondary, and post-construction settlements

c. The results of the liquefaction analyses and the proposed methods of mitigation for any location deemed necessary to protect the integrity of bridges and adjacent walls

d. The proposed method(s) of protecting and abandoning utilities

e. Details of staged construction design, if recommended

4. Cut Slopes:

   a. The results of the slope stability analyses, including external loading from live and seismic loading

   b. The recommended side-slopes of all cuts

5. Instrumentation:

   a. All items included in Section 13.5.3.3 (*Instrumentation for Monitoring Field Performance of Construction Elements*)

This page intentionally left blank.

14 STRUCTURES

14.1 General

Design-Builder shall perform all structural Work to provide bridges, retaining walls, and other related structural infrastructure improvements as categorized in Section 1.1 (*Project Categories and Limits*). The design and construction of these components shall provide high-quality, aesthetic, durable, and maintainable infrastructure, improving safety and upholding the Department's integrity. This Section 14 describes requirements for the design, construction, inspection, and load rating of structures, including new bridges, drainage structures, retaining walls, barriers, soundwalls, signal and light structures, and sign structures, as well as widening, seismic retrofit, and rehabilitation of existing bridges.

This Section 14 contains separate design and construction subsections; however, these subsections are not mutually exclusive, and the design subsections may contain requirements that are applicable to Construction Work and the construction subsections may include requirements applicable to Design Work.

Design-Builder shall replace Bridges I-937, I-938, G-941, and I-945.

Design-Builder shall coordinate with the Railroad in accordance with Section 17 (*Railroad Coordination*) for any structures Work within Railroad ROW or affecting the Railroad's operations.

14.2 Standards and References

Design-Builder shall design and construct the structures Work in accordance with the applicable requirements of the Contract Documents, including Project Standards shown in Section 26 (*Standards and References*), specific standards defined in this Section 14, Governmental Approvals, and applicable Government Rules. The structures Work under this Section 14 shall comply with the following standards:

- NDOT Structures Manual including Revision 2011-1
- NDOT Standard Specifications for Road and Bridge Construction
- AASHTO LRFD Bridge Design Specifications
- AASHTO Standard Specifications for Highway Bridges, 17th Edition
- AASHTO Guide Specifications for Design and Construction of Segmental Concrete Bridges
- Bridge Welding Code, ANSI/AASHTO/AWS D1.5M/D1.5
- AASHTO LRFD Bridge Construction Specifications
- UPRR Guidelines for Preparation of a Bridge Demolition and Removal Plan for Structures over Railroad
- AREMA Manual for Railway Engineering
- AASHTO Standard Specifications for Structural Supports for Highway Signs, Luminaries, and Traffic Signals
- AASHTO Guide Specifications for Structural Design of Sound Barriers
- AASHTO Manual for Bridge Evaluation

- FHWA Bridge Load Ratings for National Bridge Inventory (NBI)
- FHWA Seismic Retrofitting Manual for Highway Structures, HRT-06-032
- BNSF Railway – Union Pacific Railroad, Guidelines for Railroad Grade Separation Projects, dated January 24, 2007

Design-Builder's Work, including design, construction, inspection, and load rating of structures, shall also comply with the following:

- *Bridge Drafting Guidelines (with Sample Drawings)*, NDOT, 2005
- *Soundwall Systems Evaluation Manual*, NDOT, 2000
- *Bridge Inspection Coding Guide*, NDOT, 2008
- *Bridge Elements Coding Guide*, NDOT
- *Bridge Inspector's Reference Manual, FHWA, 2012*

14.3 Design Requirements

14.3.1 General

Design-Builder shall design all new bridges in accordance with the AASHTO *LRFD Bridge Design Specifications* except as modified by the NDOT *Structures Manual*.

Design-Builder shall design bridge widenings and modifications to existing bridges in accordance with the AASHTO *Standard Specifications for Highway Bridges*, 17th Edition. Design-Builder shall use strength design (load factor design) methodology for all designs based on the AASHTO *Standard Specifications for Highway Bridges*, 17th Edition.

Design-Builder shall prepare design calculations, load ratings, contract plans, working (shop) drawings and all required construction submittals using English units.

Bridges are considered to be highly skewed when support centerlines are skewed more than 30 degrees from perpendicular to the bridge centerline. A refined analysis is mandatory for bridges with skews greater than 30 degrees.

Curved bridges are defined in Article 4.6.1.2 of the AASHTO *LRFD Bridge Design Specifications*. The Department does not allow the use of the approximate analysis methods for curved bridges mentioned in Article 4.6.2.2.4 of the AASHTO *LRFD Bridge Design Specifications*. Specifically, the Department does not allow the V-load method for curved steel I-girders or the M/R method for curved steel box girders.

Short bridges are defined as bridges with overall lengths not exceeding the maximum allowed for integral and dozer abutment types as defined in Figure 11.6-C of the NDOT *Structures Manual*.

14.3.1.1 Independent Design Check

Design-Builder shall perform an independent design check in accordance with the requirements of Section 3.12.1.2 (*Analytical Check*) for the following structures:

1. Any bridge for which Design-Builder uses a refined analysis for design.

2. Bridges H-933, H-3055, and H-3056.

Independent analytical checks are required to be sealed by a Registered Professional Engineer.

14.3.1.2 Loads

14.3.1.2.1 Live Load

Design-Builder shall design all new structures for HL93 live loading (Strength I) and California P13 permit vehicle (Strength II) in accordance with the NDOT *Structures Manual*.

Design-Builder shall design all structures to be widened for HS-25 live loading and a California P13 overload vehicle in accordance with Loading Combination Group 1B.

14.3.1.2.2 Dead Load

Design-Builder shall add a 38-pound-per-square-foot (psf) unit dead load for a future overlay wearing surface to all bridge structures.

14.3.1.3 Uplift

Design-Builder shall proportion bridge spans to prevent uplift at supports for all LRFD limit states other than the Extreme Event limit state, or for all group loads except seismic loads.

14.3.2 Bridge Layout and Design

14.3.2.1 Geometry

Design-Builder shall not use fill and cut slopes steeper than 2:1 at bridge abutments. Design-Builder shall align bridge bents and supports radial to the construction centerline for curved structures.

14.3.2.2 Type

Bridge types for new construction and widening are restricted to those types designated as “Common Superstructure Types” in Section 11.5 of the NDOT *Structures Manual*. “Special Application” and “Other” superstructure types shall be treated as a Deviation.

Design-Builder shall design bridge widenings to be compatible with existing structures with respect to fixity, static and dynamic structural response, and aesthetics. Design-Builder shall comply with the bridge widening requirements in Section 22.10 of the NDOT Structures Manual. The use of a superstructure closure pour to attach existing and widened construction is mandatory.

Experimental bridge types, timber bridges, masonry bridges, voided slab bridges, prestressed precast concrete box girders, conventionally reinforced bridges, and structural plate arches are not permitted.

14.3.2.3 Seismic Requirements

Seismic analysis and design for new bridges based on the *LRFD Bridge Design Specifications* shall be based on Seismic Zone 3 using the minimum seismic coefficients shown in Figure 12.3-H

of the NDOT *Structures Manual*. Structural detailing shall comply with the requirements specified for Zone 3 in the LRFD Specifications.

Seismic analysis and design for widenings and seismic retrofitting based on the AASHTO *Standard Specifications for Highway Bridges*, 17th Edition, shall be based on Seismic Performance Category (SPC) C using a minimum acceleration coefficient of 0.15. Structural detailing shall comply with the requirements specified in Division 1A for SPC C.

For all bridges to be widened, Design-Builder shall evaluate the need for seismic retrofitting based on Method C: Component Capacity/Demand Method specified in the FHWA *Seismic Retrofitting Manual for Highway Structures*. Design-Builder shall prepare and submit a written summary of its seismic evaluation and retrofit strategy with the definitive design submittal (see Section 14.5 [*Submittals*]). Design-Builder shall design and construct seismic retrofit measures identified in its seismic evaluation and retrofit strategy summary.

14.3.2.4 Inspection Access (New Construction)

Design-Builder shall provide access hatches cast into the soffit of concrete box girder bridges. Design-Builder shall provide access hatches in combination with openings in interior diaphragms to facilitate access into every cell in each span of concrete box girder bridges. Design-Builder shall not provide access openings through girders or pier caps.

Design-Builder shall locate access opening so each cell of the box girder is accessible for inspection along the entire bridge length. Openings shall be located such that they are not over traffic and at least 15 feet above the ground or as approved by the Department.

14.3.2.5 Bridges Over/Under Railroad Facilities

Design-Builder shall coordinate all design and proposed construction activity over or under railroad facilities with the appropriate railroad company, and obtain approvals and necessary permits. Design structures in accordance with Department requirements and *BNSF Railway – Union Pacific Railroad, Guidelines for Railroad Grade Separation Projects*, dated January 24, 2007 listed in the Project Standards. Also refer to Section 18.5 (*Railroad Coordination*) for additional information.

14.3.2.6 Railings

Design-Builder shall provide reinforced concrete bridge railing conforming to the height and face shape of Type A or Type F CBR, as appropriate for consistency with the approach roadway. Design-Builder shall provide bridge railing conforming to the height and face shape of Type F CBR at the outside rail of curved bridge structures.

For existing mainline bridges that are to be widened and remain in service, Design-Builder shall remove bridge railings not conforming to the Type F CBR height and face shape and replace with conforming railings. Existing railing on widened structures that is not removed or affected as a part of the structure widening is excluded from this requirement.

14.3.2.7 Approach Slabs

Design-Builder shall provide a reinforced concrete approach slab at each end of each bridge. In addition to full compliance with the NDOT *Structures Manual*, Design-Builder shall provide approach slabs with a minimum length of 24 feet measured along the center line of the bridge,

and with the same width as the bridge deck. Design-Builder shall provide for expansion and contraction at approach pavement interface if the approach slab abuts the concrete pavement. Design-Builder shall use details of approach slabs for Department's Project Infrastructure as set forth in the Department's Standard Plans.

14.3.2.8 Deck Slabs

Open or filled grating decks and orthotropic decks are not permitted.

Design-Builder shall not locate the longitudinal joints in wheel lines.

All driving surfaces on new and widened bridge decks shall be cast-in-place concrete or polymer concrete overlay. Use a polymer concrete overlay system listed in the QPL. Make no substitutions for the listed polymer concrete system components. When the polymer concrete will be used for an overlay application, place one or more trial overlays on a previously constructed concrete base to demonstrate the effectiveness of the mixing, placing, and finishing equipment. Place trial batches under similar conditions anticipated to be encountered during placement of the permanent overlay.

For bridges with PBS approach pavement, Design-Builder shall construct the bridge deck and approach slabs to enable the riding surface to match the top of the plantmix open-graded surfacing. For bridges with PCC approach pavement, Design-Builder shall construct the bridge deck and approach slabs to enable the riding surface to match top of PCC approach pavement.

Design-Builder shall construct bridge decks, approach slabs and concrete barriers for all new and widened bridges using concrete with an electrical resistance not less than 2,000 coulombs at 50 days when tested in accordance with ASTM C1202.

14.3.2.9 Expansion Joints

Design-Builder shall locate joints for superstructure expansion only at abutments or ends of frames, unless otherwise approved by the Department. Design-Builder shall design modular joints for high-cycle fatigue loading.

Design-Builder shall use only strip seal expansion joint systems with a 3-inch minimum movement rating or modular expansion joints for new bridges.

14.3.2.10 Superstructure

Design-Builder shall provide superstructures that meet the requirements for redundancy, fatigue, and deflection in the AASHTO *LRFD Bridge Design Specifications*. Design-Builder shall provide continuous superstructures to minimize the number of expansion joints. Design-Builder shall not use end cantilever construction; all spans shall be supported at both ends. A minimum of four girder lines, per span, is required for all new slab-on-girder bridges.

Design-Builder shall use a minimum soffit thickness of 6 inches for concrete box girder bridges.

Design-Builder shall provide bolted anti-graffiti steel panels at the abutments and piers of all steel bridge structures.

Design-Builder shall use HS-25 live loading for bridge widening. Tension in the pre-compressed tensile zone for concrete members with bonded reinforcement shall be limited to $3(f'c)^{1/2}$ (psi units).

14.3.2.11 Bearings

Design-Builder shall locate bearings to provide for maintenance accessibility and future replacement. For steel structures, Design-Builder shall make provision for future bearing replacement as specified in Section 15.5.5 of the NDOT *Structures Manual*.

Design-Builder shall minimize use of bearing pedestals to the extent practicable. Design-Builder shall provide a minimum of 6-inch clearance between anchor bolts and the edge of the concrete pedestal. Design-Builder shall provide reinforcement for pedestals greater than 2 inches high.

Design-Builder shall detail the bearing anchorages and assemblies to accommodate potential misalignment of embedded anchor bolts or bearing elements.

14.3.2.12 Not Used

14.3.2.13 Abutments

Design-Builder shall provide exposed abutment surface treatments consistent with the requirements of Section 5 (*Landscape and Aesthetics*). No bench will be allowed at the top of slopes in front of abutments.

Design-Builder shall not use spill-through abutments.

For bridge widenings, Design-Builder shall design abutments to be compatible with the existing structure with respect to fixity, static and dynamic structural response, and aesthetics.

14.3.2.14 Slope Paving

Design-Builder shall provide concrete slope protection for all bridges with open abutments consistent with Section 5 (*Landscape and Aesthetics*) and in conformance with details contained in the Department's Standard Plans.

14.3.2.15 Foundations

Shallow or deep foundations may be used to support a structure. Design-Builder shall confirm all design criteria, including the differential settlement criteria, defined in the NDOT *Structures Manual* will be met with the foundations selected for each structure. Micro-piles are not acceptable for use on bridge foundations.

Design-Builder shall not place bridge spread footings on MSE walls, MSE backfill or geosynthetic reinforced soil (GRS) abutments.

14.3.2.16 Utilities

Design-Builder shall not place Utilities on or within structures without the prior written approval of the Department. Design-Builder shall hide Utilities from view if they are allowed to be placed on structures. Design-Builder shall provide continuous steel casing for Utilities that carry fluids or

gases. Design-Builder shall extend casing 50 feet beyond edge of the structure or 25 feet beyond the ends of the approach slabs.

14.3.2.17 Vertical Clearance

Design-Builder shall comply with the minimum vertical clearance requirements as specified in Figure 11.9-A of the NDOT *Structures Manual* unless a design exception has been obtained as described in Section 3.13 (*Design Exceptions*). Design-Builder shall confirm acceptable temporary clearance over railways with the railroad company having jurisdiction over the facility crossed.

Design-Builder shall provide the minimum vertical clearance shown in Figure 11.9-A of the NDOT *Structures Manual* over the entire roadway beneath the bridge from edge of pavement to edge of pavement. When barriers are present, Design-Builder shall provide the minimum vertical clearance from face of barrier to face of barrier. When curb and gutter are present, Design-Builder shall provide the minimum vertical clearance from lip of gutter to lip of gutter.

In addition to the geometric criteria for highway bridges, specific geometric criteria also apply to the horizontal and vertical alignment of railways that pass beneath highway bridges. Chapter 21 of the NDOT *Structures Manual* and the AREMA and *BNSF Railway – Union Pacific Railroad, Guidelines for Railroad Grade Separation Projects*, dated January 24, 2007 provide more information.

14.3.3 Bridge Load Rating

14.3.3.1 General Rating Methodology

Design-Builder shall calculate load ratings for new bridges by the Load and Resistance Factor Rating (LRFR) method in accordance with the AASHTO *Manual for Bridge Evaluation*. Design-Builder shall calculate load ratings for bridge widenings by the LFR method in accordance with the AASHTO Manual for Bridge Evaluation. Design-Builder shall prepare load ratings in conformance with the FHWA memorandum on bridge load ratings for the National Bridge Inventory (NBI) (October 30, 2006).

Design-Builder shall load rate straight girder bridges by line girder analysis. Design-Builder shall load rate curved girder bridges using a refined two-dimensional analysis. Design-Builder shall load rate concrete box girders for LFR ratings, except those of complex geometry, on a whole bridge basis and by line girder analysis for LRFR ratings. The total number of wheel lines for a concrete box girder bridge shall be equal to the sum of the wheel lines for the individual girders.

Design-Builder shall load rate all bridge widenings for inventory and operating ratings for the design HS20 loading (truck or lane, whichever produces the lowest rating). The number of wheel lines per girder (or other live load application) shall be in accordance with the AASHTO Standard Specifications requirements for design. Design-Builder shall load rate all new bridges for inventory and operating ratings for the design HL93 loading defined in the AASHTO *LRFD Bridge Design Specifications*.

Design-Builder shall load rate all bridge widenings and new bridges for the legal notional rating load in Figure D6A-6d in the AASHTO *Manual for Bridge Evaluation*. The number of notional rating load wheel lines per girder (or other live load application) shall be the same as for the design loading.

Design-Builder shall load rate all bridges for operating rating for the California permit vehicles P13, P9, and P5, applied separately to each vehicle. The number of permit vehicle wheel lines per girder (or other live load application) shall be the same as for the design loading.

Design-Builder shall not load rate concrete bridge decks supported by stringers. Other types of bridge decks shall be load-rated. Design-Builder shall not load rate pier caps or substructure elements such as columns, abutments, footings, and wing walls.

Design-Builder shall load rate all superstructure girders, floor beams, trusses and arches (including earth-filled spandrel arches).

Design-Builder shall use material properties and dimensions as shown in the Plans.

Design-Builder shall base the section properties of composite girders on the full depth of the composite deck slab.

14.3.3.2 Rating Methodology Details and Computer Programs

Design-Builder shall load rate all widened and new bridges with and without the future overlay wearing surface defined in Section 14.3.1.2.2 (*Dead Load)*. For the design load ratings with future overlay, minimum rating factors of 1.3 and 1.0 are required for inventory and operating ratings, respectively. For the legal notional rating load with future overlay, an operating rating factor of 1.0 or greater is required. If the load rating calculations indicate a rating factor below either of these minimum requirements, Design-Builder shall revise the bridge design and demonstrate with additional load rating calculations the rating factors for the revised design meet or exceed the stated minimum rating factor requirements.

Bridges sharply curved, extremely flared, hourglass shaped, or highly skewed with strong piers will require a refined analyses.

Design-Builder shall use the computer programs specified below to perform the load ratings. Design-Builder shall arrange data, input files, and output files such that the programs may be rerun by the Department for truck-specific ratings and to update the ratings with a minimum of effort.

Design-Builder shall load rate box culverts using the computer program BRASS-Culvert.

Design-Builder shall load rate girder bridges on horizontal tangent alignment that do not have rigidly connected supports using the computer program BRASS-Girder. Design-Builder shall load rate bridges with rigidly connected supports by other means that account for the stiffness of the substructure relative to the superstructure. Allowable concrete tension stress for inventory rating shall be $6(f'c)^{½}$ (psi units for LFR) or $0.19(f'c)^{½}$ (ksi units for LRFR).

LFR-rated box girder bridges shall be load rated for the whole width by computing moments and shears by analysis using the computer program BDS or WinBDS and computing strengths and rating factors with the Excel spreadsheet PTRater provided by the Department. Allowable concrete tension stress for inventory rating shall be $6(f'c)^{½}$ (psi units for LFR) or $0.19(f'c)^{½}$ (ksi units for LRFR).

Design-Builder shall load rate girder bridges of curved steel girders using the computer program MDX.

Design-Builder shall analyze arch bridges and other non-typical bridges using the computer program SAP2000 in conjunction with supporting manual calculations and spreadsheets for the rating as required. An alternate general frame analysis program (two- or three-dimensional) or specialized software may be used with approval of the Department.

Member properties for structural analysis shall be evaluated in accordance with the AASHTO *Manual for Bridge Evaluation*. Design-Builder shall base properties for concrete members on gross concrete section without adjustment for reinforcement or cracking except as noted here for torsion. Design-Builder shall adjust the torsion properties of concrete members when the torsion exceeds the cracking torsion of the member.

Design-Builder shall analyze bridges with rigidly connected (integral) supports as rigid frames. Diaphragm abutments free to translate and rotate at the bottom of the diaphragm shall be considered a simple support when H is less than 0.1S, where H equals the extension of the diaphragm below the superstructure and S equals the length of superstructure span in which the diaphragm terminates. Skewed pier walls rigidly connected to the superstructure shall be modeled with appropriate section properties and account for skew relative to the superstructure. Design-Builder shall appropriately account for foundation fixity and its influence on the stiffness of the bridge system and response of the substructure and superstructure to loading conditions.

Sidewalk loads: Design-Builder shall load rate bridges with sidewalks based on the sidewalk carrying pedestrian live loads and stray wheel loads pursuant to AASHTO code. Design-Builder shall include sidewalk dead load distributed across the entire bridge for concrete box girders and slabs, to the nearest tub girder for tub girder bridges, and equally to the two nearest girders for I-girder and other open section bridges.

Barrier rail, curb, and median loads: Design-Builder shall distribute the loads from barrier rail and curb at the edge of the bridge equally across the bridge for concrete box girders and slabs, to the exterior tub girder for tub girder bridges, and equally to the two outside girders for I-girder and other open section bridges. Design-Builder shall distribute median loads to the entire bridge for concrete box girders and slabs, and equally to two girders either side of the median for tub girder, I-girder and other open section bridges. When loads so distributed overlap, a uniform load across the bridge may be used.

Lost forms and stay-in-place metal forms: Unless the Department's Standard Plans indicate otherwise, assume box girders have a lost deck form weight of 12 psf. Decks with stay-in-place metal forms shall have a weight 12 psf greater than the nominal deck thickness as a load due to form weight and corrugation fill.

14.3.3.3 Load Rating Deliverables

The Department will provide the spreadsheet LoadRatingSummarySheets.xls to be filled out and returned as a deliverable with the appropriate file name as specified below.

14.3.3.3.1 Printed Deliverables

For each bridge load rating, Design-Builder shall submit:

- One copy of the "Supplemental Maintenance Report" (part of the LoadRatingSummarySheets.xls) filled in and sealed and signed by a Nevada Licensed Civil or Structural Engineer at the right of the comments block.
- One copy of the "Load Rating Summary Sheet" for girder or culvert as applicable (part of the LoadRatingSummarySheets.xls) filled out. A similar sheet, derived from these, is required as a "Load Rating Summary Sheet" for each load rating when other methods are used for the rating.
- One copy of manual calculations.
- For load rating by BRASS-Girder: A print of the data echo and rating factor summary from the BRASS output file, to be compiled by cut and paste from the output file. Design-Builder shall not provide a print of the entire output file.
- For load rating by PTRater: A print of the data and results of the worksheet "Main" in PTRater for each span rated and a sufficient excerpt of BDS or WinBds output to document the input bridge properties and loads. Design-Builder shall print BDS or WinBds output in portrait mode using Courier 6-point or Courier New 6-point font with 0.75-inch margins.
- For load rating by BRASS-Culvert: A print of the summary of culvert geometry and loads (typically page 13) and output rating factors (page 19) from the BRASS-Culvert output, to be compiled by cutting and pasting from the output file. Design-Builder shall not provide a print of the entire output file.

14.3.3.3.2 Electronic Deliverables

For electronic deliverables, bridgename is the bridge number without "-" (for example, B1558 for bridge B-1558 or I1228N for I-1228N). Design-Builder shall provide a CD (standard density) for each group of bridges rated with bridge numbers in groups of 10, with the last digit 0 to 9 in sequence being a group (i.e., 500 to 509 is a group, but 501 to 510 is not). For each structure rated, create on the appropriate CD a folder named bridgename, containing the following files and subfolders:

- The spreadsheet LoadRatingSummarySheets.xls with sheets for "Supplemental Maintenance Report" and "Load Rating Summary Sheet" filled out and the file named bridgenameLRS.xls. Note that the condition rating is the NBI rating (0 to 9) from the last inspection, leave blank for initial rating of unconstructed bridges.
- Custom spreadsheets as .xls: Excel spreadsheet files; manual calculations scanned into electronic format and provided as .pdf or .jpg or .tif files; and text files as .txt files as used for the rating.
- For rating by BRASS-Girder: The BRASS input file named bridgename.dat and the BRASS output file named bridgename.out placed in a subfolder named BrassGirder.
- For rating by PTRater: The BDS or WinBDS input file named bridgename.bds and the output file named bridgename.out placed in a subfolder named BDS; additionally, for each

span rated the PTRater file named PTRate"bridgename"sN.xls where N is the span number (example: PTRateB1558Ns2.xls for span 2 of bridge B-1558N)

- For rating culverts by BRASS-Culvert: The BRASS-Culvert input file with file extension .cus with the name bridgename.cus and the BRASS-Culvert output file with file extension .out named bridgename.out placed in a subfolder named BrassCulvert.
- For rating curved steel bridges: Input and output files from the MDX program with the name bridgename.xxx for the input file and bridgename.out for the output file, where .xxx is the native file extension of the rating program for input files, placed in a subfolder named MDX.
- For arches and other non-standard bridges: Input and output files for the computer programs used with files named in an organized manner to facilitate review of the input data, review of the output results, and reanalysis of the bridge using the programs. Design-Builder shall use a subfolder for each program used.

Design-Builder shall submit load rating models to the Department with the Released-for-Construction Design Submittal.

14.3.4 Retaining Walls

Design-Builder shall provide exposed retaining wall surface treatments consistent with the requirements of Section 5 (*Landscape and Aesthetics*).

14.3.4.1 Retaining Wall Geometry

Design-Builder shall provide for slope maintenance access above and below the wall in all retaining wall layouts. Design-Builder shall provide returns into the retained fill or cut at retaining wall ends where possible.

Design-Builder shall provide a drainage system to intercept or prevent surface water from accumulating behind walls.

Design-Builder shall provide a fence or pedestrian railing in conformance with the Department's Standard Plans at the top of walls where access is open to the public. Design-Builder shall provide a cable railing system at the top of walls where maintenance personnel will have access but not the public. Cable railings shall include horizontal cables spaced vertically at a maximum of 12 inches, with the top cable 2 feet, 10 inches above the top of wall.

14.3.4.2 Retaining Wall Types

Of the wall types discussed in Section 23.1.4 of the NDOT *Structures Manual*, Design-Builder shall use only MSE walls, cast-in-place (CIP) concrete cantilever walls, soldier pile walls, anchored walls, or soil nail walls. Design-Builder shall design walls in conformance with the AASHTO *LRFD Bridge Design Specifications*.

The concrete cantilever wall details shown on the Department's Standard Plans were not designed in accordance with the AASHTO *LRFD Bridge Design Specifications* and are not acceptable for use. Design-Builder shall design and detail CIP concrete cantilever walls in conformance with the AASHTO *LRFD Bridge Design Specifications*.

Rockery walls and precast modular block walls may be used in landscaping applications if approved by the Department. Rockery walls will not be permitted when they are located within a distance of twice the wall height (measured from top of footing to top of wall) from the edge of pavement of a non-barrier protected roadway. Modular block walls listed in the Department's QPL and designed to the AASHTO *LRFD Bridge Design Specifications* may be used as approved for landscaping applications with a maximum height of 8 feet (measured from top of footing to top of wall).

14.3.4.3 MSE Walls

Design-Builder shall design MSE walls for a minimum service life of 100 years.

Design-Builder shall use only MSE wall systems on the Department's QPL with restrictions shown. Design-Builder shall provide a minimum of 2 inches cover to reinforcing steel in all concrete wall panels. Design-Builder shall verify QPL approved MSE wall systems meet the required minimum service life.

MSE walls are not permitted adjacent to non-concrete lined drainage channels or waterways. Design-Builder shall not place drainage facilities or Utilities within or under MSE wall backfill. Other restrictions on use of MSE walls are provided in Section 11.10 of the AASHTO *LRFD Bridge Design Specifications*.

14.3.5 Sign, Signal, and Lighting Structures

The standard overhead sign structures, DMS structures, signal structures, and low-level and high-mast lighting structures shown on the Department's Standard Plans or similarly detailed designs conforming to AASHTO requirements are acceptable. Design-Builder shall design special (nonstandard) structures and gantries identified in Section 19 (*Intelligent Transportation Systems*), including foundations, in conformance with the AASHTO *Standard Specifications for Structural Supports for Highway Signs, Luminaires, and Traffic Signals*, the design criteria on the Department's Standard Plans, and as follows:

1. Overhead sign structures: Complete coverage of the structure with sign panels of similar height as installed panel(s) with two additional exit panels; Category I fatigue.

2. DMS and gantry structures: Complete coverage of structure span with installed DMS unit(s) and additional sign panels of similar height; Category I fatigue.

3. Signal structures: Category II fatigue.

Design-Builder shall provide base plates having a minimum thickness of 2 inches, or larger, if required by design.

Design-Builder shall use ASTM F1554 Grade 55 anchor bolts for Type 14 light poles.

Design-Builder shall provide graffiti protection for all sign structures. Design-Builder shall submit proposed anti-graffiti systems for sign structures for the Department's review. Barbed wire treatments are not permitted.

14.3.6 Drainage Structures

Precast, reinforced concrete box (RCB) culverts shall conform to ASTM C1577 and shall be of monolithic construction.

The CIP RCB culvert details shown in the Department's Standard Plans were not designed in accordance with the AASHTO *LRFD Bridge Design Specifications* and are not acceptable for use. Design-Builder shall design and detail CIP RCB culverts in conformance with the AASHTO *LRFD Bridge Design Specifications*.

The design of drainage structures shall be based on the controlling cover considering the Department's Project Infrastructure as described in Section 1.1.4 (*General Scope of Work*), as well as the future infrastructure improvements described in Section 1.2.2 (*Future Improvement Phases*). If the controlling cover is less than 10 feet, the minimum design cover used for design of the structure shall be the full range of live and dead load loadings from zero to 10 feet of cover. If the controlling cover is greater than or equal to 10 feet, the minimum design cover used for design of the structure shall be the controlling cover plus an additional 5 feet of cover as shown in Table 14-1. The design cover used for the design of each structure shall be clearly stated on the plan sheets.

Table 14-1 Design Cover for Drainage Structures

Controlling Cover (Current and Future)	Minimum Design Cover
<10 feet	0 to 10 feet (full range of live and dead loads)
≥10 feet	Controlling cover plus 5 feet

14.4 Construction Requirements

14.4.1 Materials

Design-Builder shall use only structural steel, structural concrete, reinforcing steel, prestressing steel, and welded wire reinforcement conforming to and in accordance with the NDOT *Structures Manual*, NDOT *Standard Specifications for Road and Bridge Construction,* and the requirements of this Section 14. Design-Builder shall not use plastic, fiber-reinforced polymers, aluminum, elastomeric concrete, or timber materials in bridge structures.

14.4.1.1 Concrete

Design-Builder shall prepare a concrete quality control plan, revisions, and weekly reports as part of the CQMP in accordance with Section 2.2.2 (*Quality System*).

Precast concrete girders shall be fabricated at a plant certified by the PCI.

Design-Builder shall use Class S or SA concrete for all drilled shaft construction. When transitioning from a drilled shaft to a column, the upper portions of drilled shafts (top of shaft down to bottom of embedded vertical column reinforcing) may be constructed using the column concrete mix.

14.4.1.2 Structural Steel

American Institute of Steel Construction CBR Certification is required for the structural steel fabricator(s). American Institute of Steel Construction Advanced Certified Steel Erector Certification is required for erectors of steel bridges. Design-Builder shall use only structural steel listed in Table 6.4.1-1 of the AASHTO *LRFD Bridge Design Specifications* except the Design-Builder shall not use Grade 100 or 100W material.

For steel bridges, Design-Builder shall prepare a camber diagram showing the camber at each panel point in the cases of trusses, and at field splices and 1/10 points of span for beams, girders, and rigid frames.

Design-Builder shall field-weld all shear studs on steel girders.

Cold-bending of structural steel plate is not permitted.

14.4.1.3 Reinforcing Steel

Design-Builder shall not use welded wire reinforcement (WWR) in place of reinforcing steel in bridges. Design-Builder may use WWR for minor structural applications as indicated in Section 14.3.2.2 of the NDOT *Structures Manual*. If the Design-Builder elects to use WWR for minor structural applications, the WWR shall conform to ASTM A1064 with a maximum yield strength of 60 ksi.

Design-Builder shall use ASTM A706 Grade 60 reinforcing steel in all bridges and bridge elements. Grade A615 reinforcing steel may be used in non-bridge structures.

14.4.2 Construction Loads on Structures

Before placing construction equipment on existing structures, Design-Builder shall prepare calculations signed and sealed by a Registered Professional Engineer verifying the structure's capacity for carrying loads anticipated during construction. Design-Builder shall include in the verification the weight of the equipment or vehicle, its payload, the distribution of wheel, axle, and/or outrigger reactions and all other loads anticipated to be on the structure while the equipment is in use.

14.4.3 Bridge Demolition

Before performing bridge demolition operations, Design-Builder shall prepare and submit a bridge demolition plan for each bridge to be partially or completely removed. Design-Builder shall list the equipment that will be used, address public and worker safety, and describe how existing facilities and remaining bridge elements will be protected during demolition activities.

When bridges are partially demolished, Design-Builder shall prepare calculations signed and sealed by a Registered Professional Engineer verifying the stability and capacity of the portion of the bridge to remain. Live loads shall not be allowed on the portion of the bridge to remain until the stability and capacity have been verified by calculations. Design-Builder shall not allow public traffic on the bridge during operations that involve girder and/or pier cap removal until the portion of the bridge to be demolished has been isolated from the portion to remain.

Design-Builder shall not allow public traffic to pass under any demolition activity.

Design-Builder shall repair damaged roadway and/or sidewalk surfaces before reopening the facility to public access.

Design-Builder shall coordinate all activities with any existing utility that may be occupying the structures to be demolished.

14.4.4 Drilled Shaft and Column Construction

Column rebar cages, including column/shaft splice zone cages, shall not be placed until CSL integrity testing of the drilled shafts has been completed and the drilled shafts have been accepted pursuant to the Project Standards. A cage is considered to be composed of vertical and horizontal reinforcing bars. If the location of the drilled shaft construction joint is greater than 10 feet, 0 inches below the top of drilled shaft/bottom of column, then second-level CSL testing of the transition zone will be required.

CSL testing is required for all drilled shafts used for bridge support. CSL testing is required for drilled shafts used for soundwall and sign structure support only when concrete is placed below water.

Temporary steel casings are required in construction of drilled shafts that are in the load influence zones for railroad tracks. Design-Builder shall use casings for the entire length of drilled shafts. The thickness of the casing will be determined by Design-Builder.

Design-Builder shall brace column reinforcing steel cages at all times. Design-Builder shall submit a bracing plan, including calculations and working drawings, which is signed and sealed by a Registered Professional Engineer.

14.4.5 Superstructures

Design-Builder shall mount strip seal restrainers in minimum 8-inch-by-8-inch block-outs keyed into the adjacent superstructure and approach slab. Design-Builder shall not install strip seal restrainers until after any required deck and/or approach slab grinding has been completed. Design-Builder shall use bridge deck and approach slab concrete mix for pouring expansion joint block-outs.

For existing bridges that will be widened, Design-Builder shall provide similar compatible expansion joint materials to provide a homogenous and continuous installation at each location. Design-Builder shall use joint systems and materials with a suitable movement rating for each structure and location. Design-Builder shall use strip seals of 3-inch minimum movement anchored in full-depth block-outs as described for new structures.

Design-Builder shall not erect girders or place concrete over roadways or other areas open to public traffic. Segmental bridge construction using CIP or precast sections will not be allowed over roadways or other areas open to public traffic.

14.4.6 Mass Concrete

Except for drilled shaft foundations and bridge columns, any concrete pour with a section where its minimum dimension measured in any direction is 6 feet or greater will be considered mass concrete. Design-Builder shall be responsible for controlling the internal temperature of mass concrete during curing to control and limit thermal cracking due to heat generation and dissipation.

Design-Builder shall perform temperature modeling and temperature monitoring for each typical placement of mass concrete. Design-Builder shall prepare a Thermal Control Plan for each typical concrete placement. The Thermal Control Plan shall include working drawings, with design calculations, for the proposed system of pre-cooling of materials, concrete placement, post-cooling, and temperature monitoring and recording. A typical placement shall be defined as a mass concrete pour of similar dimensions in a similar location within the structure, during similar weather conditions.

14.4.7 Falsework and Formwork

The Design Builder's falsework systems shall be designed and sealed by a Registered Professional Engineer and independently checked by a Registered Professional Engineer before erection at the Project Site. Independent checking shall include a sealed submittal of calculations. No falsework shall be erected before written approval of all submittals by a Registered Professional Engineer.

Forming systems for non-integral pier caps and deck overhangs are considered to be falsework.

Holes made in web plates of steel girders to support deck overhang forming systems shall be plugged with a bolt and nut of appropriate size and field-painted.

14.4.8 Bridge Widenings

When widening an existing bridge, Design-Builder shall design and construct the widening to match existing deck elevation and cross slope along the entire interface between existing and new bridge decks. Design-Builder shall plan for and construct a deck closure between existing and new bridge decks. Design-Builder shall place concrete in the deck closure only after the new bridge superstructure is no longer supported on falsework. Design-Builder shall support the ends of forms for deck closures from both the existing and new superstructures.

Design-Builder shall provide a uniform cross-slope over the full width of the existing and new bridge decks. If a grade break greater than 1 percent occurs in the cross-slope between existing bridge deck, deck closure, and/or new bridge deck, Design-Builder shall perform one or both of the following remedial measures to smooth the cross-slope:

1. Install a polymer concrete overlay on the new and/or existing bridge deck(s) and deck closure;

2. Grind the new bridge deck and deck closure. Ensure the concrete cover over all bridge deck and deck closure reinforcing steel is no less than 2 inches after grinding is complete.

Design-Builder shall coordinate all activities with any existing Utility that may be occupying the structures to be widened.

14.4.9 Corrosion Protection

Design-Builder shall provide corrosion protection for all steel bridge components exposed to the weather. Design-Builder shall galvanize all exposed and embedded steel elements including, but not limited to, bearing and expansion joint assemblies, deck drains, and approach slab protection angles.

Design-Builder shall not use unpainted steel for structural steel. Design-Builder shall use only approved paint systems on the Department QPL for painting structural steel. Design-Builder shall not use paint system products that have passed their initial expiration date. Color of paint shall be consistent with Section 5 (*Landscape and Aesthetics*).

Design-Builder shall paint all steel girders in the shop. Field painting will not be allowed, except touch-up painting and around splices. Design-Builder shall use only paint systems on the Department QPL.

14.4.10 Temporary Shoring Systems

When drilling to install ground anchors, tie-backs, soil nails, or similar assemblies for temporary shoring systems, immediately suspend drilling operations if ground subsidence is observed, the shoring system is adversely affected, or adjacent structures are damaged from the drilling operation. Immediately stabilize the adverse conditions, make necessary repairs, and modify drilling operations prior to resuming drilling.

14.4.11 Aesthetics

Section 5 (*Landscape and Aesthetics*) contains the structure aesthetic requirements. If an anti-graffiti coating is used on painted structural steel, the anti-graffiti coating shall be applied at the fabricating shop using a product that is compatible with the structural steel paint system.

14.4.12 Rehabilitating and Repairing Existing Bridges

Bridge Rehabilitation Work shall include specific rehabilitation and repair measures for existing bridges as described in this Section 14.4.12 and in Attachment 14-1 (*Bridge Rehabilitation Work*). In general, the Work associated with rehabilitating and repairing existing bridges (collectively, the "Bridge Rehabilitation Work") will include the following:

1. Repairing areas of delaminated concrete bridge decks.

2. Preparing bridge decks and installing thin bonded multilayer overlays.

3. Repairing and removing/replacing bridge deck expansion joints.

4. Removing/replacing portions of concrete barrier.

Compensation for each rehabilitation and repair measure described in this Section 14.4.12 and in Attachment 14-1 (*Bridge Rehabilitation Work*) shall be understood to include all materials, tools, equipment, labor and incidentals necessary to complete the Work in place, including establishing limits for the Work in conjunction with and at the direction of the Department as described herein, and including developing, submitting for Department approval, and implementing all traffic control measures necessary to safely access and perform the Work. Compensation for each bridge rehabilitation and repair measure shall also Design-Builder's overhead and profit.

14.4.12.1 Concrete Bridge Deck Repair

Design-Builder shall repair delaminated areas of bridge decks by removing unsound concrete and replacing with patching mortar in accordance with the requirements in Section 502.03.15 of the Department's Standard Specifications, and as directed by the Department. Delaminated areas

will be identified and mapped jointly by Design-Builder and Department staff through chain dragging and/or other sounding methods determined by the Department. Design-Builder will be compensated for concrete bridge deck repair based on actual measurement of Work completed and on a unit price basis in accordance with Section 12.1.6 in the Contract. Assumed quantities and measurement units for concrete bridge deck repair are indicated in Attachment 14-1.

14.4.12.2 Bridge Deck Preparation and Thin Bonded Multilayer Overlay

Design-Builder shall prepare bridge decks and place thin bonded multilayer overlays in accordance with Section 497 of the Standard Specifications. Design-Builder will be compensated for bridge deck preparation and thin bonded multilayer overlay based on actual measurement of Work completed and on a unit price basis in accordance with Section 12.1.6 in the Contract. Assumed quantities and measurement units for bridge deck preparation and thin bonded multilayer overlay are indicated in Attachment 14-1.

14.4.12.3 Bridge Deck Expansion Joints

Design-Builder shall replace bridge deck expansion joints as indicated below.

14.4.12.3.1 Strip Seal Expansion Joint Gland

Design-Builder shall remove glands from existing strip seal expansion joints where indicated and replace each gland with one that is continuous across the full width of the bridge at each expansion joint. Design-Builder shall furnish and install new glands that are compatible with existing steel extrusions and provide, at a minimum, the movement rating indicated either in the record drawings for each structure or as determined by the Department. For estimating purposes, assume a 4-inch minimum movement rating at all strip seal expansion joints. Design-Builder shall confirm movement ratings with the Department before ordering or fabricating materials. Field splices will not be allowed in new strip seal glands unless approved in advance by the Department.

Design-Builder will be compensated for removing existing glands and for furnishing and installing new glands in strip seal expansion joints based on actual measurement of Work completed and on a unit price basis in accordance with Section 12.1.6 in the Contract. Assumed quantities and measurement unit for replacing strip seal expansion joint glands are indicated in Attachment 14-1.

14.4.12.3.2 Expansion Joint Headers and Strip Seal Assembly

Design-Builder shall remove and replace expansion joint headers and strip seal assemblies where indicated. Design-Builder shall furnish and install concrete headers and strip seal assembly in accordance with the Strip Seal Expansion Joint detail in Attachment 14-1. Design-Builder shall furnish and install only those products that are compatible with existing conditions.

Design-Builder will be compensated for removing expansion joint headers and strip seal assembly and for furnishing and installing new concrete headers and strip seal assembly based on actual measurement of Work completed and on a unit price basis in accordance with Section 12.1.6 in the Contract. The assumed quantity and measurement unit for removing and replacing expansion joint headers and strip seal assembly are indicated in Attachment 14-1.

14.4.12.3.3 Pourable Joint Seal

Design-Builder shall remove poured-in expansion joint seals where indicated and thoroughly clean and prepare the joint in accordance with the sealant manufacturer's recommendations.

Design-Builder shall furnish and install pourable sealant with backer rod in accordance with the sealant manufacturer's recommendations and at the direction of the Department. Design-Builder shall furnish and install only those sealant products listed in the QPL and that are compatible with the existing joint widths requiring sealant.

Design-Builder will be compensated for removing poured-in expansion joint seals and for furnishing and installing pourable expansion joint seals based on actual measurement of Work completed and on a unit price basis in accordance with Section 12.1.6 in the Contract. Assumed quantities and measurement unit for replacing pourable joint seal are indicated in Attachment 14-1.

14.4.12.3.4 Relief Joint Seal

Design-Builder shall remove and replace relief joint seals where indicated. Design-Builder shall furnish and install relief joints in accordance with the Relief Joint detail in Attachment 14-1. Design-Builder shall furnish and install only those preformed joint fillers listed in the QPL and that are compatible with existing conditions.

Design-Builder will be compensated for removing relief joints and for furnishing and installing new relief joints based on actual measurement of Work completed and on a unit price basis in accordance with Section 12.1.6 in the Contract. The assumed quantity and measurement unit for removing and replacing relief joints are indicated in Attachment 14-1.

14.4.12.4 Concrete Barrier Removal and Replacement

Design-Builder shall remove and replace damaged portions of concrete barrier as indicated in Attachment 14-1. The exact location and limits for barrier removal and replacement will be determined by the Department. Design-Builder shall replace the concrete barrier using materials with properties and dimensions matching existing conditions, as indicated in the record drawings for the structure, and as directed by the Department.

Design-Builder will be compensated for removing and replacing portions of concrete barrier based on actual measurement of Work completed and on a unit price basis in accordance with Section 12.1.6 in the Contract. Assumed quantities and measurement unit for concrete barrier removal and replacement are indicated in Attachment 14-1.

14.5 Submittals

Design-Builder shall detail design Submittals for all bridges and structures to the level and standards delineated in the NDOT *Bridge Drafting Guidelines (with Sample Drawings)*.

Submittals will include, as a minimum, the documents identified below for each stage of design development. Design-Builder shall provide submittals as set forth in Section 3 (*Design Quality Management*). In addition, Submittals will include, but not be limited to, the Design Documents identified below for each stage of design development.

14.5.1 Stage 1 Design

In addition to meeting the requirements of Section 3.9.1 (*Stage 1 Design*), Design-Builder shall submit the following:

1. Design Criteria Memorandum: This submittal shall include a list of all new and widened bridges that are anticipated. The memorandum shall identify the lead design engineer and check engineer for each structure. The memo shall list design codes and specifications to be used by all designers. In addition, project specific criteria, design criteria, material properties, design methodology, seismic design methodology, and deck design methodology shall be defined. The memo shall also list all anticipated software and the applications for each. Standard details to be used in all bridge designs shall be identified.

2. Definitive Design Submittal: This submittal shall include a front sheet (plan, elevation, and typical section) and a geometrics and general notes sheet. This submittal is required for all new bridges, box culverts, and box culvert extensions and for all widening, seismic retrofit, and rehabilitation of existing bridges.

14.5.2 Stage 2 Design

In addition to meeting the requirements of Section 3.9.2 (*Stage 2 Design*), Design-Builder shall submit the following:

1. Substructure Design Submittal (80 percent Submittal): This Submittal shall include an approved design criteria memorandum, preliminary calculations, and a preliminary geotechnical report, and shall provide sufficient detail to verify that Design-Builder is adhering to the applicable design standards for the Project structures. This Submittal, as a minimum, will include the following sheets (as applicable):

    a. Front sheet
    b. Geometrics and general notes
    c. Foundation layout and pile data
    d. Foundation reinforcing details
    e. Abutment details
    f. Abutment reinforcing details
    g. Pier cap details (non-integral caps)
    h. Pier cap reinforcing details (non-integral caps)
    i. Column details
    j. Column reinforcing details
    k. Bar bend details

2. Superstructure design Submittal (80 percent Submittal) – This Submittal will include an approved design criteria memorandum, preliminary calculations, initial load rating calculations, and shall provide sufficient detail to verify that Design-Builder is adhering to the applicable design standards for the project structures. This Submittal, as a minimum, will include the following sheets (as applicable):

    a. Front sheet
    b. Geometrics and general notes
    c. Pier cap details (integral caps)
    d. Pier cap reinforcing details (integral caps)
    e. Framing plan

f. Framing details
g. Typical superstructure section and reinforcing
h. Deck reinforcing plan
i. Soffit reinforcing plan
j. Steel girder details
k. Pre-stressed girder details
l. Post-tensioning details
m. Camber and concrete placement diagrams
n. Approach slab details
o. Bridge rail layout and details
p. Expansion joint details
q. Bearing details
r. Bar bend details
s. Bill of materials

14.5.3 Release-for-Construction Design

In addition to meeting the requirements of Section 3.9.3 (*Released-for-Construction Design*), this Submittal shall include the sealed calculations specified under Section 14.4.2 (*Construction Loads on Structures*) and shall provide sufficient detail to verify that Design-Builder is adhering to the applicable design standards for the Project structures. This Submittal shall also include a Final Geotechnical Report, final specifications and special provisions, final sealed calculations, sealed check calculations, and a sealed bridge load rating report and all load rating deliverables required as described in Section 14.3.3 *(Bridge Load Rating)*.

14.5.4 Final Design

Refer to Section 3.9.4 (*Final Design*).

14.5.5 Working Drawings

Refer to Section 3.10 (*Working Drawings*).

14.5.6 Record Drawings

In addition to meeting the requirements of Section 3.11 (*Record Drawings*), the Record Drawings will consist of the as-built signed and sealed drawings specified under Section 14.5.2 (*Stage 2 Design*). This Submittal shall also include a Final Geotechnical Report in accordance with Section 13 (*Geotechnical*).

Design-Builder shall submit a full set of Record Drawings to the Department's Structures Division consisting of approved working drawings, released-for-construction plans, sealed calculations for all structures, load ratings and calculations, final sealed geotechnical reports, and final sealed specifications and special provisions.

This page intentionally left blank.

15 SIGNALS AND LIGHTING

15.1 General

Design-Builder shall perform the signals and lighting Work to provide the infrastructure improvements as categorized in Section 1.1 (*Project Categories and Limits*) for the Project. Design-Builder shall provide a durable lighting system that provides appropriate illumination, avoids light pollution outside of the corridor, avoids disability and discomfort glare to users, provides for ease of maintenance and servicing, and meets all Project Standards.

Design-Builder shall provide continuous freeway lighting for the Department's Project Infrastructure in accordance with the limits described in Section 1.1.4 (*General Limits of Work*). This includes lighting on I-15 and US 95 mainlines, gores, on-ramps and off-ramps, collector-distributor roads, elevated roadways, underpasses, guide signs, poles on top of structures, and signalized intersections at interchanges. Design-Builder shall be responsible for the design and construction of high-mast and standard light poles, including foundations, conduit systems, circuitry, power supplies, lighting cabinets, and coordination with the power company (NV Energy) to obtain power feed for traffic signals and lighting devices.

Design-Builder shall provide local roadway lighting on arterials for the Local Agency Project Infrastructure and for the Department's Project Infrastructure.

- At a minimum, Design-Builder shall provide fully functioning traffic signals for the Local Agency Project Infrastructure and for the Department's Project Infrastructure at the following intersections. Design-Builder's design may require additional traffic signal systems.
- Sahara Avenue at I-15 southbound off-ramp
- Oakey Boulevard at Martin Luther King Boulevard
- Wyoming Avenue at Western Avenue
- HOV Drop Ramps at Neon Gateway
- Western Avenue at Neon Gateway
- Western Avenue at Grand Central Parkway
- Charleston Boulevard at I-15 northbound ramps
- Charleston Boulevard at I-15 southbound ramps
- Charleston Boulevard at Grand Central Parkway
- Grand Central Parkway at Iron Horse Loop
- Grand Central Pkwy at Premium Outlet Drive
- Ellis Lane at Martin Luther King Boulevard
- Bearden Drive at Martin Luther King Boulevard
- Pinto Lane at Martin Luther King Boulevard
- Alta Drive at Martin Luther King Boulevard

- Bonneville Avenue at I-15 northbound off-ramp
- Bonneville Avenue at Grand Central Parkway

Traffic signal systems shall include foundations, traffic signal poles, mast arms, signal heads (with light-emitting diode [LED] indications), conduit systems, controller cabinet meeting agency requirements, circuitry, detection devices as acceptable to the Department's district traffic engineer, associated signal equipment, intersection dual lighting (LED type), pavement markings, and signing. The Work shall include coordinating Utility connections with the proper Utility Owner and interconnecting all signals with local jurisdictions.

15.2 Standards and References

Design-Builder shall design and construct the Work in accordance with the applicable requirements of the Project Standards defined in Section 26 (*Standards and References*), specific standards defined in this Section 15, Governmental Approvals, and applicable Government Rules.

15.3 Traffic Signals

The traffic signal performance requirements described in this Section 15.3 are for the Local Agency Project Infrastructure and for the Department's Project Infrastructure. Also refer to Attachment 26-2 (*City of Las Vegas Special Provisions*) for additional requirements for traffic signals provided by Design-Builder as part of the Local Agency Project Infrastructure.

15.3.1 Performance Requirements

Design-Builder shall perform a signal warrant analysis for permanent signal systems required to accommodate Design-Builder's design at locations that are not specified in Section 15.1 (*General*). In that scenario, Design-Builder shall submit Design Documents including the signal warrant analysis to the Department as part of the Design Review process for review and comment before preparing and submitting signal Plans.

Design-Builder shall coordinate all design and construction of traffic signal system components with the Department and the local agency having jurisdiction for traffic signal operation and maintenance. Design-Builder shall notify the Department's Traffic Division of all the coordination meetings.

Using the criteria specified in Section 11 (*Traffic*) and Section 15.3.2 (*Design and Construction Requirements*):

- All traffic signals shall be designed to provide efficient movement of traffic (vehicular and pedestrian) in both the year of operation (2025) and the design year (2035).
- Design-Builder shall incorporate signal timing plans provided by the Department's Traffic Management Center (TMC) that optimize traffic flows and provide signal coordination with adjacent intersections, railways, and arterial roads. Design-Builder shall coordinate with the Department for obtaining the signal timing plans.
- Position poles, controller cabinets, metered power pedestals, and pedestrian pushbuttons in conformance with the ADA, *Proposed Accessibility Guidelines for Pedestrian Facilities in the Public Right-of-Way*, the Department, and local agency requirements.

- All work performed on any traffic signal component must be under the direct onsite supervision of an International Municipal Signal Association (IMSA)-certified technician. The level of certification required shall be Level II or higher.
- Design-Builder shall maintain existing, temporary and permanent signals through the Work pursuant to Project Standards, including Section 623 G.03.01N in Attachment 26-2 (*City of Las Vegas Special Provisions*).
- Design-Builder shall pothole-signal pole locations before ordering poles.
- All pushbuttons are to be mounted 42 inches above sidewalk. The maximum horizontal reach distance is to be 10 inches.
- Design and construction of all temporary and permanent traffic signals shall use mast arms of less than 80 feet.
- Traffic signal poles shall not be installed on median islands less than 8 feet wide.
- No splices shall be permitted between the controller cabinet and the traffic signal pole or in loop lead-in cables. All connections shall be made at the pull box or, in the case of loops, at the loop stub.
- If the improvements necessitate the obliteration, temporary construction, temporary removal, or relocation of any existing traffic pavement marking, such pavement marking shall be restored or replaced at Design-Builder's expense to the satisfaction of the Department.
- For delivery of existing traffic signal equipment that was removed and salvaged, Design-Builder shall contact the Department to arrange for delivery times and locations, 72 hours prior to delivery, to arrange for the delivery.

15.3.2 Design and Construction Requirements

15.3.2.1 Traffic Signal Design

Design-Builder shall prepare a preliminary design in the form of traffic signal Plan sheets for Design Review as part of the Stage 1 Design submissions that includes all existing signal equipment and interconnect and displays all proposed signal equipment and interconnect within the Project. The Plan sheets shall also display lane geometry, striping and turning bay lengths, all existing and proposed crosswalks, all existing and proposed Utility locations, existing and new power source location, provisions for accommodating pedestrians, 95th percentile queue analysis for all legs, and any other engineering calculations used to support the design. Any required temporary MOT signal plan, along with the associated phasing of signal construction, shall also be presented at this time.

15.3.2.2 Traffic Signal Plan Requirements

Design-Builder shall prepare traffic signal Plans to address any new traffic signals, temporary signals, or modifications that are required. All traffic signal Plans shall be drawn in accordance with the IDM, the MUTCD, and the City of Las Vegas traffic signal standards. Traffic signal Plans shall be provided to the Department in accordance with the Design Review process.

Existing traffic signal operation and detection shall be maintained during all phases of the roadway construction and all stages of MOT. If the existing method of detection is through loop detectors, video detection can be utilized for maintaining detection during construction.

15.3.2.3 Interconnect Plans

All new signal systems shall come equipped with ITS infrastructure such as fiber-optic cable, interconnect conduit, Fiber Optic Branch Cables (CDCAs), Ethernet switches, and CCTVs for a complete operating interconnect system. Design-Builder shall prepare traffic signal interconnect Plans and include them with the traffic signal Plans submissions, as required. Design-Builder shall obtain all existing interconnect information. Interconnect plans shall include controller cabinet locations, conduits, switches, hand holes, sampling stations, a wiring diagram, cables, construction details, and an equipment list that is in accordance with Design-Builder's design and CADD requirements.

Design-Builder shall be responsible for Utility pole removals required when relocating existing interconnect. All interconnect shall be relocated before roadway construction so that interconnect can be maintained throughout construction. Design-Builder shall be responsible for relocating any existing fiber-optic cable affected by construction and be in conformance with Contract Section 17.4 for maintaining ITS functionality. Splices shall not be permitted along interconnect runs. Design-Builder shall be responsible for obtaining all Governmental Approvals and third-party agreements required for placing interconnect on Utility poles and shall be responsible for all associated costs.

15.3.2.4 Utility Requirements

Design-Builder shall be responsible for locating and marking all underground Utilities before any signal installation work begins. Design-Builder shall notify all Utility companies at the numbers below to verify in the field the locations of their installations 72 hours before construction.

CALL-BEFORE-YOU-OVERHEAD	1-702-227-2929
CALL-BEFORE-YOU-DIG	1-800-227-2600
STREETLIGHTS	1-702-227-6331
FAST	1-702-432-5300

Note that Department Utility conduits for lighting, signal conduits, and power service conduits are not included in "call before you dig" database systems.

15.3.2.5 Electrical Service for Traffic Signals

See Section 18.3.5 (*Additional Design Requirements*) for requirements to provide electrical service for traffic signals. See Section 15.3.2.7.1 (*Metered Service*) for material requirements.

Design-Builder shall use 200 AMP metered service pedestals at all traffic signal locations. All traffic signal service pedestals shall be in the name of City of Las Vegas. These service pedestals can service local road lighting in addition to traffic signal equipment and related intersection lighting as long as the total load does not exceed 80 percent of the available power. Service pedestals for landscape irrigation and aesthetic lighting owned, operated and maintained by the City of Las Vegas cannot be combined with traffic signal service pedestals.

15.3.2.6 Sight Distance Requirements

Design-Builder shall ensure that all traffic signal heads for temporary and permanent conditions can be seen by all approaching traffic at the required sight distance at all times during and after Construction Work.

Design-Builder shall prepare and present sightline plans for all traffic approaches of each signalized intersection to the Department for review and approval with traffic signal Plan submissions.

Design-Builder shall also prepare and submit to the Department for review and approval, with traffic signal Plan submissions, sightline profiles for all overhead signs, bridges, and hazard identification beacons that are on traffic signal approaches.

Design-Builder shall prepare and present to the Department for review and approval, with traffic signal Plan submissions, separate sightline plans and profiles for each MOT phase that has different sightlines approaching a traffic signal. If sightlines do not meet the MUTCD requirements, Design-Builder shall provide a recommendation for meeting the requirements to the Department.

15.3.2.7 Materials

All traffic signal equipment shall be new and designed and constructed in accordance with the Project Standards and these Technical Provisions. For traffic signal systems operated and maintained by the City of Las Vegas, the following materials shall be used.

15.3.2.7.1 Metered Service

Service shall have one 60-amp single pole breaker for signal, and one 40-amp single pole breakers for street lights. Service shall be pad-mounted and as described in Section 15.3.2.5 (*Electrical Service for Traffic Signals*). The line side of meter shall be wired with three #3/0 AWG THW. The load side shall be wired with four #4 AWG THW (two black, two white) and one #8 AWG THW (green).

15.3.2.7.2 Traffic Signal Cabinet

The traffic signal cabinet shall be a Type VIII cabinet, commonly referred to as an "R" cabinet. The cabinet shall conform to the Clark County Area Uniform Standard Drawings and Specifications and Attachment 26-2 (*City of Las Vegas Special Provisions*). The traffic signal controller cabinet shall be equipped with 16 load bay positions, shall be a 48 detector channel R cabinet, and shall include two rack-mounted, 12-slot, loop detection racks, with two detector loop channels per slot fully wired so that all channels are usable and four channel slots that can accommodate video detection cards. The cabinet shall contain a 764 opticom phase selector in a 760 rack, with a 768 auxiliary interface panel mounted in the cabinet and fully wired for green sense capabilities.

15.3.2.7.3 Traffic Signal Controller and Malfunction Management Unit

Design-Builder shall supply a Malfunction Management Unit (MMU) and traffic signal controller to the Department a minimum of 28 days before signal turn-on or before converting to a new phasing scheme, for testing and programming purposes. The controller shall be a Naztec 980 ATC TS2 Type 2 NTCIP-compliant signal controller or Siemens M53 controller with OS9 version 3.3.0 operating software, and the MMU shall be a model MMU-1600GE as manufactured by Reno A&E

or model MMU2-16LEip as manufactured by Eberle Design, Inc., or approved equal. Design-Builder shall deliver the controller and MMU to and pick up the controller at 2824 East Charleston Boulevard, Las Vegas, NV. Design-Builder shall notify the Department 14 days before pickup.

15.3.2.7.4 Vehicle and Pedestrian Signal Indications

All vehicle and pedestrian signal indications shall have LED-type indications, in conformance with Attachment 26-2 (*City of Las Vegas Special Provisions*) and Section 623 of the Clark County Area Uniform Standard Specifications. All pedestrian signal faces shall provide “Walking Person,” “Hand,” and “Countdown” messages as provided by Duralight model #JXM-400-VIEIL or Dialight model #430-6479-001X, or approved equal. The “countdown” message shall not flash. Where existing signals are modified, Design-Builder shall verify that LED pedestrian indications for a specific phase are of the same manufacturer so that they function correctly, or shall replace all countdown pedestrian indications for that phase.

15.3.2.7.5 Mast Arms

All mast arms are to be fabricated with end tenon only. The end tenon shall be factory-installed, and the remaining tenons shall be fabricated in the field as directed by the Department traffic engineer and/or his authorized representative. For tenon fabrication details comply with Clark County Area Uniform Standard Drawing. No. 808 Sheet 2. All welding shall comply with AWS D 2.0, "Specification for Welded Highways and Railway Bridges," and with any additional requirements of Section 623 of the Uniform Standard Specifications for Public Works Construction, Clark County Ar*ea*. All exposed welds shall be painted as provided for repairing damaged galvanized surfaces.

15.3.2.7.6 Opticom Preemption Units

Optical preemption units will be Global Traffic Technologies (encoding capable), Model 764 opticom phase selector installed in a Model 760 rack with a Model 768 auxiliary interface panel (AIP) mounted in the cabinet and fully wired for green sense capabilities. Optical sensors will be Model 721 with one detector per direction and will be interfaced to the traffic signal controller cabinet with M-138 cable. The southbound opticom detector shall be wired to input preempts on channel 1 in the phase selector, eastbound on channel 2, northbound on channel 3, and westbound on channel 4. When 764 phase selectors are added to a cabinet without a 768 AIP, Design-Builder shall install and wire a new 768 AIP.

15.3.2.7.7 Loop Detectors

Where new loops will be overlaid with new pavement, loop detectors shall be preformed loops as manufactured by Reno A&E or Never-Fail loop systems, and all loops shall be installed in the roadway before placement of the final pavement lift. Where new loops are installed that are not overlaid with new pavement, loops shall be cable-in-duct per Section 623 T.02.04C in Attachment 26-2 (*City of Las Vegas Special Provisions*). Loop lead-in cable shall be 6-pair 18 AWG multiple conductor cable as specified in Section 623T.02.04 in Attachment 26-2 (*City of Las Vegas Special Provisions*). All wiring harnesses, rack positions, and loop lead-in cable shall be clearly marked as to the appropriate phase and letter designation to which it belongs.

15.3.2.7.8 Video Detection Systems

Video detection systems will be either Iteris EDGE 2 with Edgeconnect Pak (IP addressable), Peek Videotrak IQ (with Ethernet port), or Traficon VIP with Viewcom (IP addressable). All video

detection systems will be standalone systems with all necessary equipment to program the video detection system. A programming "mouse," keypad, or laptop computer (if required for programming the video detection system) and appropriate software will be supplied with each video system. Personal computers may not be substituted for laptops. A video monitor (color flat screen) 9 inches by 13 inches will be supplied with each video detection system. Each video camera will have power and video cable directly from the cabinet. Coaxial cable will be Type 8281 (solid center conductor). Cameras that use a prefabricated cable integrating power and coaxial cable into a single weatherproof connector are acceptable. "BNC" are the only acceptable termination of coaxial cables. Cameras will be mounted according to manufacturer's recommendations and be subject to approval by the Department. Video cameras shall be color and shall be mounted on a minimum 6-foot riser on the signal mast arm with extension brackets (Type AB-0166-5-62 or equivalent). The location of the camera on the mast arm shall be approved by the Department. A video filter (CX06-BNYC or equivalent) will be installed in the signal cabinet for each camera video input. Video detection processors and communications cards shall be provided with the latest versions of the manufacturer's software. Design-Builder shall aim cameras and program and configure the video detection processors to provide a fully functioning system.

15.3.2.7.9 Pedestrian Push Buttons

Pedestrian push buttons shall be audible tactile "Polara Navigator" type (2 Wire System) or Campbell Company advanced accessible pedestrian system buttons with AAPS APC (controller) in accordance with Attachment 26-2 (*City of Las Vegas Special Provisions*) and Section 623 of the Uniform Standard Specifications for Public Works Construction, Clark County Area. Push button signs shall be R10-3E according to the MUTCD (2009 Edition), with full mounting brackets, as modified by the manufacturer to fit on a 9-inch-by-12-inch sign, and shall be porcelain-enameled metal. Design-Builder shall provide and install all cabinet equipment, including the pedestrian push button control unit, interface panel, and any required harnesses to provide a fully functioning system.

15.3.2.7.10 Internally Illuminated Street Name Signs

The internally illuminated street name signs shall be wired to the luminaires' photo cell for control with #10 AWG THW copper stranded wire (typical). The sign shall be wired to the luminaire directly above it. If there is no luminaire on the traffic signal pole, the 1,000 watt (W) P.E. control shall be mounted on the pole cap. All new illuminated street name signs shall have LED lamps in accordance with Section 623 T.02.16 of Attachment 26-2 (*City of Las Vegas Special Provisions*).

15.3.2.7.11 Pull Boxes

All pull boxes shall be in accordance with Clark County Area Uniform Standard Drawings No. 705, No. 706, and No. 707.

15.3.2.7.12 Traffic Signal Cable

Traffic signal cable shall be 15 or 25 Conductor #14 AWG solid (typical) cable and shall conform to IMSA Spec. No. 20-1.

15.3.3 Temporary Traffic Signals

Design-Builder shall provide temporary traffic signals as required by the MOT Plans. Design-Builder shall perform the studies necessary to establish placement of temporary traffic signals

and present the studies and proposed temporary signal placements to the Department for review and approval.

15.3.4 Traffic Control Device Verification – Signals

Design-Builder shall schedule meetings with the Department and/or local agency to verify traffic control device work as follows:

- At the completion of all cabling and wiring and before electrical utility service connection
- Before traffic control device activation

Design-Builder shall notify and schedule turn-on events with the Department on non-holiday Tuesdays, Wednesdays, or Thursdays between 10:00 AM and 2:00 PM, except by alternate agreement. Design-Builder shall have a manufacturer's representative onsite during scheduled turn-on events.

15.4 Lighting

The lighting performance requirements described in this Section 15.4 are for the Department's Project Infrastructure, and the Local Agency Project Infrastructure. Also refer to Attachment 26-2 (*City of Las Vegas Special Provisions*) for additional requirements for lighting provided by Design-Builder as part of the Local Agency Project Infrastructure.

15.4.1 Design and Construction Requirements

Design-Builder shall design, furnish, and install lighting within the Site. Design-Builder shall replace all existing luminaires with LED equivalents for the Department's Project Infrastructure including but not limited to lighting on I-15 and US 95 mainlines, gores, on- and off-ramps, collector-distributor roads, elevated roadways, underpasses, guide signs, and poles on top of structures.

Design-Builder shall replace existing luminaires with LED equivalents for the Local Agency Project Infrastructure and for the Department's Project Infrastructure, including but not limited to lighting on roadways and at signalized intersections at the interchanges. Design-Builder shall coordinate all design and construction of local arterial, intersection lighting system components for the Local Agency Project Infrastructure and for the Department's Project Infrastructure with the Department. In the Downtown Centennial area, all streetlights shall be concrete black pole with single or dual LED lighting (Roadway side 160w LED and Pedestrian side lighting 110w LED) – rotated 180 degrees. The street light pole shall either be Ameron or Stresscrete 16-foot, 3-inch pole or approved equal. The length of streetlight pedestrian side arm varies with the sidewalk width. For sidewalk of 10 feet (including amenity zone) – the arm length shall be 4 feet. For 15-foot sidewalk or meandering sidewalk, streetlight arm shall be 8 feet to match the street side lighting. The lighting fixtures shall be the Philips Gardco ROUND 10 – CA22L or approved equal LED light that will meet the aesthetic and the light level requirement as specified on Uniform Standard Detail 300.SC. Design-Builder shall perform a lighting analysis to confirm roadway light level requirements are satisfied. Special foundations for the black concrete pole are also required as indicated in the "Light Pole Caisson" detail in Section 623 of Attachment 26-2 (*City of Las Vegas Special Provisions*).

For the Local Agency Project Infrastructure and for the Department's Project Infrastructure, Design-Builder shall position poles and metered power pedestals in conformance with the ADA,

Proposed Accessibility Guidelines for Pedestrian Facilities in the Public Right-of-Way, and the Project Standards. Light poles shall not be installed on median islands less than 8 feet wide. Design-Builder shall provide dual luminaires for intersection lighting at all signalized intersections.

Design-Builder shall coordinate the heights of high-mast lights with the Federal Aviation Administration (FAA), comply with FAA requirements, and apply for permits if necessary. The mounting height for high-mast poles at the interchanges shall be between 50 feet to 120 feet.

Power supply for Department's Project Infrastructure lighting shall be installed in separate conduits and on independently metered circuits. Design-Builder shall design and install lighting structures such that they are consistent with the aesthetic guidelines in Section 5 (*Landscape and Aesthetics*).

15.4.1.1 Design Criteria

Design-Builder shall prepare and submit Design Documents presenting the lighting calculations for the Department's approval with lighting Plan submissions. The lighting analyses are to model the three-dimensional aspect of the roadway with respect to the position of the illumination assemblies (i.e., freeway mainlines, roadways, gores, ramps, and overpasses), which typically consist of varying vertical and horizontal distances from the luminaries used to light the roadways. All ramps and flyovers that rise or drop in elevation shall be modeled for the change in elevation from the freeway accommodate the respective light fixture and mount. All bridge structures shall be modeled in the analyses to represent solid objects that light cannot pass through.

Lighting analyses reports shall include the following information:

- Pole sizes, configurations, locations, spacing, elevations and luminaire mounting heights
- Pavement classifications
- Lamp Illuminating Engineering Society (IES) selections
- Lamp wattages
- Light loss factors
- Average maintained illuminances
- Illuminance average to minimum uniformity ratios
- Minimum illuminances

Design-Builder shall provide spacing computations showing the average maintained illuminance. The calculations shall include uniformity ratios and point-by-point computations. Design-Builder shall apply the light loss factors (LLFs) from Table 15-1 when computing photometrics.

15.4.1.1.1 Freeway Mainline, Service Interchanges, Gores, and Ramp Lighting

The Department's Project Infrastructure lighting analysis and criteria shall be in accordance with Table 15-2, which is taken from Table 3-5a of the AASHTO *Roadway Design Lighting Guide*. Freeway mainline illuminance, luminance and veiling luminance calculations are to be performed where appropriate based on the method described in Figure A4 of ANSI/IESNA RP-8-14, Roadway Lighting, where the distance between calculation points will be 16.4 feet with two transverse points per lane. The calculations are to be performed in logical intervals for the entire length of the Project area. Local roadways and intersections are to be calculated using 10-feet by 10-feet calculations grid for illuminance only.

15.4.1.1.2 Local Roadway, Intersection and Sidewalk/Walkway Lighting

For the Local Agency Project Infrastructure and the Department's Project Infrastructure roadway illuminance calculations shall be performed based on the method described in Figure A4 of ANSI/IESNA RP-8-00, where the distance between calculation points will be 16.4 feet with two transverse points per lane. The calculations are to be performed in logical intervals for the entire length of the Project area.

Design-Builder shall follow design criteria for illuminance in Section 623 of Attachment 26-2 (*City of Las Vegas Special Provisions*) to support the placement and selection of lighting meeting the classification of the local roadways, intersections and sidewalks/walkways.

Design-Builder shall combine intersection lighting with the traffic signal Plans whenever possible. All intersection lighting shall be prepared using the guidelines from the Department, City of Las Vegas, and ANSI/IESNA RP-8-14, Section 5.1, for the design of intersection lighting.

Table 15-1 Light Loss Factors

Luminaire Types	Lamp Type and Wattage	Initial Lumens	Mean Lumens	Lamp Lumen Depreciation Factor	Luminaire Dirt Depreciation Factor	Lumen Ambient Temperature Factor	Total LLF
LED Enclosed Cutoff High Mast Department	35K Lumen (444W) LED 42K Lumen (560W) LED	34,962 41,934	34,612 41,934	0.99	0.80	0.93	0.737
LED Enclosed Wide Roadway Department	11K Lumen (130W) LED	10,600	9,540	0.90	0.80	1.00	0.720
LED Underpass Department, IES Type III And IES Type IV	8K Lumen (111W) LED To 13K Lumen (179W) LED	8,229 To 13,108	7,406 To 12,190	0.93	0.80	0.90	0.670
LED Enclosed Wide Roadway Intersection, 100-foot by 100-foot plus, City of Las Vegas	24K Lumen (254W) LED	23,206	20,885	0.90	0.90	1.00	0.810
LED Enclosed Wide Roadway 81-foot to 100-foot Project ROW, City of Las Vegas	14-16K Lumen (148W to 172W) LED	13,900 To 15,400	12,510 To 13,860	0.90	0.90	1.00	0.810

Table 15-1 Light Loss Factors

Luminaire Types	Lamp Type and Wattage	Initial Lumens	Mean Lumens	Lamp Lumen Depreciation Factor	Luminaire Dirt Depreciation Factor	Lumen Ambient Temperature Factor	Total LLF
LED Enclosed Roadway, 61-foot to 80-foot Project ROW, City of Las Vegas	9K Lumen (102W) LED	8,950	8,055	0.90	0.90	1.00	0.810
LED Enclosed Roadway, 52-foot to 60-foot Project ROW, City of Las Vegas	7K Lumen (79W) LED	6,958	6,262	0.90	0.90	1.00	0.810
LED Enclosed Roadway, less than 51-foot Project ROW, City of Las Vegas	5K Lumen (60W) LED	5,100	4,590	0.90	0.90	1.00	0.810
Downtown Centennial Roadways, City of Las Vegas	13K Lumen (160W) LED	12,802	11,521	0.90	0.90	1.00	0.810
Downtown Centennial Sidewalks, City of Las Vegas	9K Lumen (110W) LED	8,911	8,019	0.90	0.90	1.00	0.810

Table 15-2 Illuminance and Luminance Design Values
Department's Project Infrastructure

Classification	Off-Roadway Light Sources	Average Maintained Illuminance R1 Road Surface	Minimum Illuminance	Illuminance Uniformity Ratio Avg/Min (Maximum)
Interstate and other Freeways	Commercial	0.6 to 1.1 FC	0.2 FC	3:1 or 4:1

Source: Table 3-5a from *Roadway Design Lighting Guide*, AASHTO
Notes for Table 3-5a, Illuminance and Luminance Design Values (English) apply to the values above.
FC = footcandles

15.4.1.1.3 Existing Roadway Lighting

In locations where the Project will affect existing roadway lighting, the existing lighting structures shall be replaced by Design-Builder with pole types consistent with existing to maintain consistency. Design-Builder shall design and construct the lighting system consistent with the Project Standards. For locations where luminaires are attached to a Utility pole, Design-Builder (as a part of the Utility Adjustment effort) shall contact the local Utility Owner to coordinate the relocation of the light fixture. Design-Builder is responsible for coordinating and entering into agreements with the Utility Owner and paying for any and all related costs. Design-Builder shall remove existing light poles that are no longer required due to construction of the Project. The equipment shall be the property of Design-Builder upon removal unless a Design-Builder Utility Agreement specifies otherwise. Design-Builder shall notify the Department of the lighting being removed at least 2 weeks in advance of scheduled equipment removal.

15.4.1.1.4 Underpass Lighting

Underpass lighting shall be considered part of the Department's Project Infrastructure. Design-Builder shall provide underpass lighting to maintain roadway lighting continuity. The underpass lighting shall be in accordance with the criteria from the AASHTO *Roadway Lighting Design Guide*. Design-Builder's Work shall include replacement of all existing underpass lighting luminaires with LED equivalents within the Site for fixture replacement only.

15.4.1.1.5 Sign Lighting

Design-Builder shall design and install sign lighting for all system-to-system interchange guide signs and all guide signs on I-15 from south of the Sahara Avenue interchange with I-15 to the US 95 system interchange with I-15 (Spaghetti Bowl). Sign lighting fixtures shall be LED fixtures. Design-Builder shall provide a luminaire retrieval system in accordance with the Project Standards and install conduit in the foundations. A structure hand hole shall be placed toward the base of the sign support. A grounding system shall be included.

15.4.2 Design Lighting Roll Plan

Design-Builder shall prepare and submit Design Documents presenting Design-Builder's lighting design in a roll plan format for Design Review as part of a Stage 1 Design submittal. The design lighting roll plan shall include proposed locations for all lights and photometric calculations supporting the light locations. The lighting roll plan shall be presented concurrently with the design signing roll plan and ITS roll plan, for review and comment by the Department.

15.4.3 Plan Sheet Requirements

Design-Builder shall prepare lighting Plans at a scale equal to the roadway Plans, but not smaller than 1 inch equals 100 feet. Lighting Plans shall show the light locations, conduit and pull box locations, service point locations, schedules for conduit, conductor, pull boxes and services, and showing the load calculation for each street light system, pole, junction box, and miscellaneous details. All existing lights to be removed shall be shown on separate removal Plans.

15.4.4 Performance Requirements

All proposed lighting equipment shall be located such that it can be readily maintained. Lighting placed on traffic signal equipment shall be serviced from a metered service pedestal. Each luminaire mounted on a signal structure shall be equipped with a photocell. Design-Builder shall

provide voltage drop calculations for all circuits. The voltage drop for each circuit shall not exceed 5 percent for new circuits. A minimum of two branch circuits shall be used for each continuous succession of lighting structures. All lighting circuits shall have balanced lighting loads. Only the conductors that serve the lighting structures shall enter the foundation of the lighting structures. All other conductors shall remain unspliced and bypass the foundation. Design-Builder shall furnish and install single conductor cables in conduit under all roadway surfaces. Single conductor cables shall be used any place cables are to be installed in conduit. Design-Builder shall provide electrical manholes and connector kits to splice the conductors. No in-ground splices of electrical cables shall be permitted for any reason. No electrical manholes shall be placed in drainage ditches. Design-Builder shall remove all unused conductors between poles that are to be removed. Design-Builder may, however, abandon conduit between two poles that are to be removed. Any existing lighting structure that is affected by the construction of this Project shall be disconnected and reconnected to its original power supply by Design-Builder as part of this Project unless it is being removed. Light poles shall not be installed in front of traffic barrier. Residential shielding shall be provided with all lighting within 150 feet of a residential structure, where necessary to achieve a less than or equal 0.2 horizontal FC illuminance requirement. All electrical designs shall be coordinated with the electrical system required for the ITS equipment. The lighting system shall use cabinets and conduits separate from the ITS equipment.

15.4.4.1 Temporary Lighting

Design-Builder shall be responsible for maintaining existing lighting levels on all facilities in the Site.

Design-Builder shall maintain all existing and temporary lighting within the Site. Temporary overhead electrical service is acceptable for non-breakaway poles. Design-Builder shall remove temporary lighting when no longer needed. Design-Builder shall be responsible for the power costs of any and all temporary lighting that may be required, and it is Design-Builder's responsibility to schedule, coordinate, and pay for all Utility connections.

15.4.4.2 Electrical Service for Lighting

See Section 18.3.4 (*Additional Design Requirements*) for requirements to obtain electrical service for lighting.

Service pedestals installed to service Department's Project Infrastructure shall be in the name of the Department and shall be located within the Department's Project ROW.

Lighting service pedestals for the Department's Project Infrastructure shall have minimum ampacity of 200 and can be used to service ITS infrastructure as long as the total load does not exceed 60 percent of the available power. Design-Builder shall maintain at least a 1,000-foot spacing between consecutive service pedestals servicing including but not limited to freeway lighting, ITS infrastructure, landscape irrigation and aesthetic lighting. Existing service pedestals that meet the requirements of this Section 15 can be used to power new electrical devices.

Service pedestals installed to service the Local Agency Project Infrastructure lighting shall be in the name of City of Las Vegas and located within the City of Las Vegas right-of-way. Design-Builder shall use 200 AMP metered service pedestals for local road lighting. Each of these service pedestals can service traffic signal equipment and related intersection lighting in addition to local road lighting as long as the total load does not exceed 80 percent of the available power.

Service pedestals to service landscape irrigation, aesthetic lighting, and other elements as part of L&A Work for the Local Agency Project Infrastructure shall not be combined with any other service pedestal.

15.4.4.3 Aesthetic Requirements

Design-Builder shall provide lighting structures and luminaires that conform to the aesthetic guidelines provided in Section 5 (*Landscape and Aesthetics*) and Attachment 05-1 (*Landscape and Aesthetics Requirements*). Lighting structures on local agency streets will follow local agency standards for the local district.

15.4.5 Materials

Materials are shown in Table 15-3.

15.4.6 Traffic Control Device Verification – Lighting

Design-Builder shall schedule meetings with the Department and/or the local agency to verify lighting Work as follows:

- At the completion of all cabling and wiring and before electrical Utility service connection
- Before traffic control device activation

15.5 Submittals

Submittals will include, as a minimum, the documents identified below for each stage of design development. Design-Builder shall provide submittals as set forth in Section 3 (*Design Quality Management*). In addition, Submittals will include, but are not limited to, the Design Documents identified below and in this Section 15 for each stage of design development.

Table 15-3 Materials

Description	Luminaire	Standard
High-Mast Lighting	Holophane; LED High-Mast, Short Cutoff Enclosed HMAO-LED or Approved equal 42K Lumen, 560W, 14 LED Module, 4000K CCT IES Classification Type V, Symmetrical, Cutoff Four luminaires ring mast lighting mount on shorter poles for general freeway lighting. Six luminaries ring mast lighting mount on taller poles on both sides of an interchange where the freeway is depressed. Eight luminaries ring mast lighting mount on taller poles on both sides of an interchange where the freeway is depressed.	NDOT 2010 Standard Plans for Road and Bridge Construction Drawing T-30.1.11
High-Mast Lighting	Holophane; LED High-Mast, Short Cutoff Enclosed HMAO-LED or Approved equal 42K Lumen, 560W, 14 LED Module, 4000K CCT IES Classification Type II, Asymmetrical, Cutoff	NDOT 2010 Standard Plans for Road and Bridge Construction Drawing T-30.1.11

Table 15-3 Materials

Description	Luminaire	Standard
	Two luminaires twin or back-back mast lighting mount on shorter poles for freeway lighting from the sides of the roadway. Four luminaires ring mast lighting mount on shorter poles for general freeway lighting. Six luminaries ring mast lighting mount on taller poles on both sides of an interchange where the freeway is depressed. Eight luminaries ring mast lighting mount on taller poles on both sides of an interchange where the freeway is depressed.	
High-Mast Bridge Median Lighting	Holophane; LED High-Mast, Short Cutoff Enclosed HMAO-LED or Approved equal 42K Lumen, 560W, 14 LED Module, 4000K CCT IES Classification Type II, Asymmetrical, Cutoff Two luminaires back-back mast lighting mount on shorter poles with for freeway lighting from the median of a flyover ramp bridge.	NDOT 2010 Standard Plans for Road and Bridge Construction Drawing T-30.1.11
Mainline, Gore and Ramp Department Type 7 (New and Existing)	General Electric; Evolve 2 Module LED Roadway Lighting, Scalable Cobrahead or Approved equal ERS20HXEX5574GRAYEL or Approved equal 10,000 Lumen, 130W LED 4,000K CCT IES Classification Type II Medium, Full-Cutoff	NDOT 2010 Standard Plans for Road and Bridge Construction Drawing T-30.1.10
Mainline, Gore and Ramp Department Type 14 (New and Existing)	General Electric; Evolve 2 Module LED Roadway Lighting, Scalable Cobrahead ERS20HXEX5574GRAYEL or Approved equal 10,000 Lumen, 130W LED, 4,000K CCT IES Classification Type II Medium, Full-Cutoff	NDOT 2010 Standard Plans for Road and Bridge Construction Drawing T-30.1.10
Ramp Department Special Installation on Wall (New)	General Electric; Evolve 2 Module LED Roadway Lighting, Scalable Cobrahead ERS20HXEX5574GRAYEL or Approved equal 10,000 Lumen, 130W LED, 4,000K CCT IES Classification Type II Medium, Full-Cutoff	NDOT 2010 Standard Plans for Road and Bridge Construction Drawing T-30.1.10 (Arm details only)
Sign Lighting	Holophane; LED Sign Lighting Sign-Vue LED or Approved equal 40W to 82W LED, 4,000K CCT IES Classification Type III	NDOT 2010 Standard Plans for Road and Bridge Construction Drawing T-30.16.1
Underpass Ceiling Mounted (New and Existing)	BetaLED (Cree); Underpass, EDGE Transportation Series or Approved equal IES Classification Type III or Type IV 8K Lumen, 111W, LED	NDOT 2010 Standard Plans for Road and Bridge Construction

Table 15-3 Materials

Description	Luminaire	Standard
	To 13K Lumen, 179W LED, 4,000K CCT Existing HPS Luminaires to be modeled as replaced with LED for ceiling-mounted installations	Drawing T-30.1.19 (Type A)
Underpass Wall-Mounted	BetaLED (Cree); Underpass, EDGE Transportation Series or Approved equal IES Classification Type III or Type IV 8K Lumen, 111W LED to 13K Lumen, 179W LED, 4,000K CCT Existing HPS Luminaires to be modeled as replaced with LED for wall-mounted installations	NDOT 2010 Standard Plans for Road and Bridge Construction Drawing T-30.1.19 (Type A)
LED Enclosed Wide Roadway Intersection, City of Las Vegas	General Electric LED Roadway Lighting, Scalable Specification Grade Cobrahead ERS2_F3B1751, 172W Philips HADCO Cobrahead LED Roadway Lighting RX2128-3HCA5-R-12, 205W or Approved equal	RTCSNV Uniform Standard Drawings Dwg Nos. 808, 810
LED Enclosed Wide Roadway 81-foot to 100-foot Project ROW, City of Las Vegas	General Electric LED Roadway Lighting, Scalable Specification Grade Cobrahead ERS1_F3B1751, 148W Phillips HADCO Cobrahead LED Roadway Lighting RX2160-3HNA3-R-12, 172.2W or Approved equal	RTCSNV Uniform Standard Drawings Dwg Nos. 314, 316
LED Enclosed Roadway, 61-foot to 80-foot Project ROW, City of Las Vegas	General Electric Evolve LED Roadway Lighting, Scalable Specification Grade Cobrahead ERS1_B3B1750, 78W Phillips HADCO Cobrahead LED Roadway Lighting RX164-3HCA5-R-12, 101.5W or Approved equal	RTCSNV Uniform Standard Drawings Dwg Nos. 314, 316

Table 15-3 Materials

Description	Luminaire	Standard
LED Enclosed Roadway, 52-foot to 60-foot Project ROW, City of Las Vegas	General Electric; Evolve 1 Module LED Roadway Lighting, Scalable Specification Grade Cobrahead ERS1_A3E1-740, 60W Phillips HADCO Cobrahead LED Roadway Lighting RX148-3HCA5-R-12, 78.8W or Approved equal	RTCSNV Uniform Standard Drawings Dwg Nos. 314, 316
LED Enclosed Roadway, less than 51-foot Project ROW, City of Las Vegas	General Electric Evolve LED Roadway Lighting, Scalable Specification Grade Cobrahead ERS1_23B1740, 41W Phillips HADCO Cobrahead LED Roadway Lighting RX148-3HNA3-R-12, 53.12W or Approved equal	RTCSNV Uniform Standard Drawings Dwg Nos. 314, 316

RTC = Regional Transportation Commission of Southern Nevada

15.5.1 Stage 1 Design

In addition to the required Submittals described in Section 3.9.1 (*Stage 1 Design*), submit the following Design Documents:

- Lighting analyses and calculations (roadways and intersections)
- Design lighting roll plan
- Traffic signal warrant analysis
- Traffic signal sightlines – plan and profiles
- Removal Plans

15.5.2 Stage 2 Design

Refer to Section 3.9.2 (*Stage 2 Design*).

15.5.3 Released-for-Construction Design

Refer to Section 3.9.3 (*Released-for-Construction Design*).

15.5.4 Final Design

Refer to Section 3.9.4 (*Final Design*).

15.5.5 Working Drawings

Refer to Section 3.10 (*Working Drawings*).

15.5.6 Record Drawings

Refer to Section 3.11 (*Record Drawings*).

.

16 SIGNS AND PAVEMENT MARKINGS

16.1 General

Design-Builder shall perform all signs and pavement marking Work for the infrastructure improvements as categorized in Section 1.1 (*Project Categories and Limits*) necessary to meet the requirements of this Section 16 and to satisfy all functional needs of the Project, including signing and pavement markings for mainlines, ramps, collector-distributor roads, interchanges, local roads, intersections, shared-use paths, and sidewalks. Signing shall be provided for the orderly and predictable movement of all traffic and for the safe and informed operation of individual elements of the traffic stream. Design-Builder shall replace existing signing and pavement markings outside the Work that are rendered inaccurate, ineffective, or confusing by the Work.

Design-Builder shall modify/install signs and pavement markings on I-15 related to the conversion of existing express lanes to HOV lanes according to the limits described in Section 1.1.4 (*General Limits of Work*).

All overhead signs shall be coordinated with ITS devices.

For the purposes of this Section 16, the following terms are as referenced and/or defined in the MUTCD, as applicable.

Arrow-per-Lane	Exit Direction
Pull-Through	Interchange Sequence
Specific Service Sign	General Service Sign

16.2 Standards and References

Design-Builder shall design and construct the Work in accordance with the applicable requirements of the Project Standards defined in Section 26 (*Standards and References*), specific standards defined in this Section 16, Governmental Approvals, and applicable Government Rules.

16.3 Signing

16.3.1 Design and Construction Requirements

Design-Builder shall furnish and install new signs and supports for all signs affected by the Work. Design-Builder shall replace existing signing outside the Work that are rendered inaccurate, ineffective, or confusing by the Work.

Space overhead signs, including ITS overhead sign devices (DMS and Active Traffic Management [ATM] signs), and specific service, supplemental, and general service signs a minimum of 800 feet for mainlines, collector-distributor roads, and ramps. Design-Builder shall provide arrow-per-lane signs for all system-to-system interchange exits with an option lane, and for all ramp splits with an option lane.

For system-to-system interchange exits with an option lane, Design-Builder shall provide the following:

1. One arrow-per-lane sign in advance of the exit
2. An arrow-per-lane sign at the exit
3. Interchange sequence signs containing supplemental distances in advance of the exit where practical

For other mainline exits with an option lane, and mainline exit-only exits (auxiliary or through lane drops with no option lane), Design-Builder shall follow 2003 MUTCD nondiagrammatic sign guidance for overhead signing for option lanes and provide the following:

1. Two overhead signs in advance of the exit:
    a. The first sign in the direction of travel shall be an interchange sequence sign that contains a supplemental distance to the exit
    b. The second sign in the direction of travel shall be located over the lane being dropped as well as the option lane
2. An exit direction sign and an optional pull-through sign at the exit

For single-lane exits from the mainline created by an added deceleration lane, Design-Builder shall provide the following:

1. A minimum of one overhead sign in advance of the exit
2. An exit direction sign and an optional pull-through sign at the exit

For ramp splits, Design-Builder shall provide the following:

1. A minimum of one overhead sign in advance of split where practical:
    a. For splits with option lanes, an arrow-per-lane sign
    b. For splits without option lanes, an overhead lane assignment sign
2. An overhead guide sign at the theoretical gore of the split, or point of departure.
    a. For splits with option lanes, an arrow-per-lane sign
    b. For splits without option lanes, an exit direction sign

On local streets at interchanges, Design-Builder shall provide an overhead sign at the beginning of the turn lane for each movement onto the mainline or collector-distributor road.

An exit shall not be signed for more than two destination names or street names. Destination or street names should remain the same as what is currently used. If there is a new interchange, the name on the exit sign will be for the cross-street only.

The exit direction sign, pull-through sign, arrow-per-lane sign, and ground-mounted exit gore sign shall be the only signs used within 100 feet of the gore.

Design-Builder shall furnish and install new sign panels and supports for all cultural designation signs along the I-15 and US 95 mainline and off-ramps that are impacted by the Work and make any necessary modifications to ensure that the signs will work with the Project's ultimate design. These signs include, but are not limited to, The Smith Center, Fremont St. District, Arts District, and City Museums.

If a system destination and service destination share the same exit from the mainline, Design-Builder shall not sign the service and system destination on the same sign. For the service destination, Design-Builder shall provide an offset, ground-mounted supplemental guide sign after the nearest overhead guide sign in advance of the corresponding exit in the direction of travel.

If any existing panel sign on an existing overhead sign structure is replaced, Design-Builder shall replace all other existing panel signs on the structure. If the overall square footage of panel signs on an existing overhead sign structure is increased, Design-Builder shall evaluate the existing sign structure to determine if it meets the structural capacity requirements for the new sign(s) in accordance with Section 13 (*Geotechnical*) and Section 14.3.5 (*Sign, Signal, and Lighting Structures*). If an existing sign structure is not sufficient to support the new panel signs, Design-Builder shall replace the entire sign structure, including the foundations.

16.3.1.1 Design Signing Roll Plan

Design-Builder shall prepare and provide a design signing roll plan for the Department's discretionary approval. The design signing roll plan shall include proposed sign locations and messages for all overhead guide signs, HOV lane sign applications, proposed locations for new structures, and proposed panel updates on existing signs located outside the Site to accommodate the Department's Project Infrastructure signing. The design signing roll plan shall include the location of all proposed and existing DMS and proposed ATM gantry signs as specified in Section 19 (*Intelligent Transportation Systems*).

The design signing roll plan features shall include, but are not limited to, the existing and proposed roadway alignments, Project ROW, Utilities, baseline of construction (including stationing), and existing topography at the tie-in points of the roadway limits of Work. The proposed pavement markings shall also be shown on the design signing roll plan.

If any existing panel sign requires alteration of the message, the panel sign shall be replaced as described in Section 16.3.1 (*Design and Construction Requirements*).

16.3.1.2 Signing Plan Requirements

Design-Builder shall prepare signing Plans at a scale equal to the roadway Plans. Signing Plans shall show the proposed message; location of all route marker assemblies; and guide, HOV, warning, regulatory and other supplemental signing. Signing Plans shall also show the location, messages, and sizes of all existing signs in summary sheets. All existing signs to be removed shall be shown on separate sign removal Plans. Signing Plans shall include the location and type of delineation devices (including pavement markings). Design-Builder shall also include milepost signs in accordance with the Project Standards.

All exits shall be numbered using reference location sign exit numbering, which means the existing numbers relate to the mile reference of the milepost at that location. When more than one exit occurs within the same mile, the first exit shall be identified with the number and letter "A," the second exit "B," and so forth. All custom guide signs shall be detailed on a detail sheet. All

ground-mounted sign supports (steel and wood) shall be detailed on a summary sheet. The tables on this sheet shall include the sign number, plan sheet number where the sign is located, the sign size, the post size to be used, and post type. The overhead structures and the cantilever structures detail sheets shall also be included in the Plan set.

16.3.1.3 Design of Sign Locations

Design-Builder shall design, fabricate, and install all the overhead and ground-mounted signs shown on the signing Plans within 25 feet of the location shown or as otherwise directed by the Department. For signing along the mainline freeway, all guide signs, DMSs, supplemental guide signs, and any overhead structures (including lane gantries) shall be installed as described in Section 16.3.1 (*Design and Construction Requirements*). Signs, including regulatory and warning signs along the ramps and cross-streets, shall be installed in accordance with Chapter 2 of the MUTCD. Design-Builder shall design all details of the sign panels, including ground-mounted and overhead supports. Design-Builder shall coordinate the proposed sign locations with all proposed landscaping, Utility, hydraulic, lighting, ITS equipment, and all other roadside features to provide proper clearances, lighting levels, and adequate sight distance. Design-Builder shall provide to the Department, for review and comment with signing Plan submissions, documentation that sufficient sight distance is provided to allow for appropriate perception-response time for all signs along the ramps and cross-streets.

16.3.1.4 Sign Design and Construction Requirements

The messages, fonts, text sizes, arrows, shields, colors, borders, and type of supports for the overhead and ground-mounted signs on the mainline freeway and associated ramps shall be designed and constructed in accordance with Chapter 2 of the MUTCD, following freeway sign and plaque sizes. The design of the signs shall adhere to the latest edition of the FHWA *Standard Highway Signs Book*, and, as applicable, the *Nevada Sign Supplement*.

The messages, fonts, text sizes, arrows, shields, colors, borders, and type of supports for the overhead and ground-mounted signs on local roads shall be designed and constructed in accordance with Chapter 2 of the MUTCD, following conventional road (multi-lane) sign and plaque sizes. The design of the signs shall adhere to the latest edition of the local agency standards, FHWA *Standard Highway Signs Book*, and, as applicable, the *Nevada Sign Supplement*.

Design-Builder shall use Type IV reflective sheeting for background material and Type IX or XI reflective sheeting for all legends on overhead guide sign installations without sign lighting.

Design-Builder shall use Type IV reflective sheeting for background material and for all legends on overhead guide sign installations with sign lighting.

Design-Builder shall use Type IV, IX, or XI reflective sheeting material for all regulatory and ground-mounted guide sign installations.

Design-Builder shall use Type IX or XI fluorescent reflective sheeting on all warning sign installations.

Reflectorized signs made of molded thermoplastic material shall meet the requirements for Type IV reflective sheeting.

Overlay acrylic electronic cuttable (EC) films and inks used for assembly must be approved for use by the manufacturer of the sheeting material. Design-Builder shall use only acrylic EC film to achieve color. The service life of inks and films shall be comparable to the sheeting used.

16.3.1.5 Sign Supports

Design-Builder shall provide sign supports in accordance with the Department's Standard Plans, and as set forth in Section 26.5 (*Project Neon-DB Standard Drawings*). See Section 14.3.5 (*Sign, Signal, and Lighting Structures*) for design requirements of overhead sign support structures.

In accordance with MUTCD, the Department's Standard Plans, and as set forth in Section 26.5 (*Project Neon-DB Standard Drawings*), all mainline and freeway interchange guide signs shall be installed on the appropriate sign support structure. For each sign support location, Design-Builder shall draw the sign panel(s) and the sign supports on the corresponding completed cross-section. The proper vertical and horizontal clearances, sign sizes and offsets, number of lanes, and lane widths shall be labeled on the cross-sections. A minimum of 18 feet of vertical clearance should be provided for all sign supports over the entire width of the pavement, including shoulders. Design-Builder shall check cross-sections and profiles at all sign locations and make adjustments as necessary to provide adequate sight distances and proper placement of the guide signs. Sign support design shall include anti-graffiti devices and detailing.

Ground-mounted signs shall be installed in accordance with MUTCD and the Department's Standard Plans, and as set forth in Section 26.5 (*Project Neon-DB Standard Drawings*).

Roadside barriers shall be provided for protecting all double post braced and non-breakaway supports within the clear zone. Design-Builder shall remove all sign supports abandoned due to relocation or removal of signing.

16.3.2 Sign Lighting

Design-Builder shall design and install sign lighting for all system-to-system interchange guide signs and all guide signs on I-15 from south of the Silverado Ranch Boulevard interchange with I-15 to the US 95 system interchange with I-15 (Spaghetti Bowl). See Section 15.4 (*Lighting*) for sign lighting requirements.

16.4 Pavement Markings

The pavement marking Work shall include the design and installation of pavement markings, markers, and delineation for the infrastructure improvements as categorized in Section 1.1 (*Project Categories and Limits*).

16.4.1 Design and Construction Requirements

16.4.1.1 Pavement Marking Plan Requirements

Design-Builder shall prepare pavement marking Plans at a scale equal to the roadway Plans. The Plans shall show the color, size, location, and material type for markings. The lanes shall be dimensioned based on the typical sections for the Project. Dimensions shall be included for each change in the roadway typical.

All proposed pavement markings shall also be shown in the signing Plans and included in the signing Plan submissions to the Department.

16.4.1.2 Pavement Marking Design and Construction Requirements

Design and construction of freeway, ramp, and southbound collector-distributor system pavement markings shall include:

- Broken white lines that are 8 inches in width for all pavement surfaces
- Edge lines that are 8 inches in width for all pavement surfaces
- Gore and dotted stripes that are 12 inches in width for all pavement surfaces

For all temporary and final pavement marking lane lines, including parallel, acceleration/ deceleration lanes for ramps, and intersection auxiliary lanes, pavement marking components such as color, size, location, and material type shall be in accordance with the Department's Standard Plans. Design-Builder shall use polyurea for painted pavement markings.

Design and construction of local arterial pavement marking components such as color, size, location, and material type shall be in accordance with local agency standards and as described in Section 1.2.1 (*Local Infrastructure*). Pavement markings shall be located consistent with the lane configurations and crosswalks described in Section 11 (*Traffic*).

Design-Builder shall eliminate all existing permanent and temporary traffic lane markings that do not match the final permanent striping configuration. Where pavement marking Work is to be constructed, Design-Builder shall mill the existing pavement to a depth of 1 inch and pave the roadway as described in Section 10 (*Pavement*).

16.5 Submittals

Submittals will include, as a minimum, the documents identified below for each stage of design development. Design-Builder shall provide submittals as set forth in Section 3 (*Design Quality Management*). In addition Submittals will include, but not limited to, the Design Documents identified below and in this Section 16 for each stage of design development.

16.5.1 Stage 1 Design

In addition to the required Submittals described in Section 3.9.1 (*Stage 1 Design*), submit the following Design Documents:

- Design signing roll plan
- For all existing sign structures, written justification to add, delete, or modify signs on existing structures

16.5.2 Stage 2 Design

Refer to Section 3.9.2 (*Stage 2 Design*).

16.5.3 Released-for-Construction Design

Refer to Section 3.9.3 (*Released-for-Construction Design*).

16.5.4 Final Design

Refer to Section 3.9.4 (*Final Design*).

16.5.5 Working Drawings

Refer to Section 3.10 (*Working Drawings*).

16.5.6 Record Drawings

Refer to Section 3.11 (*Record Drawings*).

This page intentionally left blank.

17 RAILROAD COORDINATION

17.1 General Requirements

Design-Builder shall perform the Design Work and coordination with the Railroad and the Department for the applicable Construction and Maintenance Agreements, Railroad Right-of-Entry Agreements, and/or obtain a valid Right-of-Entry permit from the Railroad for the Project's railroad crossings. Design-Builder shall perform Construction Work in accordance with all executed Construction and Maintenance Agreement, Railroad Right-of-Entry Agreement and/or a valid Right-of-Entry permit from the Railroad.

Design-Builder shall be responsible for all costs associated with the Railroad or its consultant's review of Design Documents and Construction Documents. Design-Builder shall be responsible for all costs associated with Flagman(s) services as specified by the Railroad. Upon NTP1, Design-Builder shall be responsible for all costs associated with the Department's two "*Agreement for Preliminary Engineering Services*" previously executed with the Railroad.

Railroad's approval of Railroad Submittal Packages, execution of a Construction and Maintenance Agreement, and Railroad Right-of-Entry Agreement, and the Public Utility Commission authorization are required prior to commencement of Construction Work for the Railroad crossings described in this Section.

Design-Builder shall identify and account for, in the Project Baseline Schedule the Submittals described in Section 17.6 (*Submittals*). Design-Builder's Project Baseline Schedule shall provide a minimum of 365 days upon the Railroad's approval of each railroad crossing's Railroad Submittal Package to the execution of a Construction and Maintenance Agreement, and Railroad Right-of-Entry Agreement, and the Public Utility Commission authorization.

17.2 Railroad Crossings

There are two Railroad crossing locations within the Project. The first is an existing Overhead Structure that is part of the Department's Project Infrastructure with a specific Department name and number (G941), as reflected in Table 17-1. The second is a new crossing located south of Charleston Boulevard connecting Industrial Road to Grand Central Parkway with an Overhead Structure crossing the Railroad ROW, referred to as the GCI Overpass and is part of the Local Agency Project Infrastructure.

Table 17-1 Railroad Crossing Locations

Railroad Crossing Locations	NDOT Bridge Name and Number	Federal Railroad Admin. Number	Railroad Milepost	Public Utilities Commission (PUC) Submittal Required
North of US 95 (G941)	UPRR Spur G941	804215W	0.48	Formal Application
South of Charleston (GCI Overpass)	TBD	441010X	332.95 Cima Sub	Formal Application

17.3 Administrative Requirements

17.3.1 Standards

Perform railroad coordination Work in accordance with the relevant requirements of the Project Standards, Railroad Guidelines, Construction and Maintenance Agreements, Railroad Right-of-Entry Agreement and PUC authorization.

Minimum temporary and permanent horizontal and vertical clearances shall be in accordance with the Railroad Guidelines or American Railway Engineering and Maintenance-of-Way Association (AREMA) clearance requirements, whichever is greater. Design-Builder shall make every effort to design for greater clearances. Permanent horizontal and vertical clearances for G941 shall not be less than existing clearances unless authorized by the Railroad.

17.3.2 Railroad Scope

Design-Builder's railroad Work includes the following activities:

- Prepare and furnish Railroad Submittal Packages for each of the railroad crossings. Perform the Work necessary to receive Railroads approval of the Railroad Submittal Packages allowing the Department to advance the Construction and Maintenance Agreements.
- Assist the Department in the preparation of the Construction and Maintenance Agreements by providing the necessary Design Documents. The Department will submit the Construction and Maintenance Agreements to the Railroad.
- Provide any information required to support the Department with the Railroad and Public Utility Commission review and approval processes.
- Enter into, for each crossing, the Railroad Right-of-Entry Agreement.
- Obtain and comply with all applicable design and construction specifications and requirements for each Work location that is on or adjacent to Railroad ROW.
- Arrange for and obtain all temporary rights-of-entry and access onto Railroad property, and comply with all Railroad requirements for access, entry, and safety training for all personnel involved, including all rights-of-entry from the Railroad.
- Identify and coordinate with the Railroad for Flagman(s) operations, and pay for costs of Flagman(s) operations as set forth in Section 6.2.1 of the Contract.
- Comply with and perform roadway worker training courses for all personnel that may enter any Railroad ROW.
- Coordinate with the Railroad during Design Work and Construction Work.

Based on Design Documents provided by Design-Builder, as further defined herein, the Department will provide the information to the Railroad in accordance with Section 17.1.3.1 (*Railroad Submittal Packages*).

Design-Builder and the Railroad will be signatories to the Railroad Right-of-Entry Agreements to perform the Work. The Department and the Railroad will be signatories to the Construction and

Maintenance Agreements. The Department will apply to the Public Utility Commission for authorization for the railroad crossings.

All track Work, signal Work, and any Railroad owned facilities impacted by the Project will be designed and constructed by the Railroad as set forth in Section 6.2.1 of the Contract and the Construction and Maintenance Agreements.

Design-Builder shall comply with the requirements of the Construction and Maintenance Agreements and the Railroad Right-of-Entry Agreement.

17.3.3 Railroad Requirements

Railroad will grant a temporary construction license to construct the improvements at each crossing location within Railroad ROW. The Railroad will provide Flagman(s) services necessary for the safety of the Railroad's property and the operation of its trains during the Construction Work of the Project within the Railroad's ROW as set forth in Section 6.2.1 of the Contract. The Railroad will designate a Railroad Local Representative as the Railroads primary point of contact for the Project.

17.3.4 Railroad Agreements

Design-Builder shall comply with the requirements of all executed Construction and Maintenance Agreements and Railroad Right-of-Entry Agreement between the Railroad and the Department necessary to perform the Work on the existing and proposed railroad crossings. See Section 6.1.7 of the Contract regarding Design-Builder's rights and responsibilities for the Construction and Maintenance Agreements, Railroad Right-of-Entry Agreement and Public Utility Commission's approval.

To enter the operating Railroad ROW to perform the Work, Design-Builder must obtain railroad Contractor Right-of-Entry Agreements with the Railroad and must coordinate the arrangements of the necessary agreements directly with the Railroad. Additionally, Design-Builder must obtain any other permits and approvals necessary to perform Work in the Railroad's ROW.

17.4 Design Requirements

17.4.1 Railroad Submittal Packages

Prepare Railroad Submittal Packages including the appropriate Design Documents for each of the railroad crossings listed in Table 17-1 to assist the Department in securing the executed Construction and Maintenance Agreements. Submit complete Railroad Submittal Packages for review, comment, and approval by the Department and the Railroad as described in Section 17.6 (*Submittals*). Design-Builder shall provide Railroad Submittal Packages consistent with the requirements set forth in the Railroad Guidelines and as modified herein.

A Railroad Submittal Package shall be composed at a minimum the following Design Documents:

- Design Documents meeting the requirements described in Section 3 of the *BNSF Railway – Union Pacific Railroad, Guidelines for Railroad Grade Separation Projects*, dated January 24, 2007 for Overhead Structures.

- All information required for a Design Submittal, with the incorporation of the Department's comments.
- Provision of lighting for Overhead Structures wider than 80 feet.
- Pier protection in conformance with AREMA requirements.
- Bridge cross sections with sufficient data to determine geometry
- Demolition considerations.
- Access roads and bridge elevation
- Railroad identification information (mile post, subdivision, etc.).
- Foundation plans showing bent(s), column(s), and foundation locations for foundations located in the Railroad ROW.
- Construction impact limits to construct all improvements adjacent to and within Railroad ROW.
- Estimated cost of Flagman(s) services work, so that the estimate can be included in each of the Construction and Maintenance Agreements. Such estimate will not relieve Design-Builder of its obligations to pay the actual costs of Flagman(s) services, as set forth in Section 6.2.1 of the Contract.
- Any additional information, data, and/or supporting information as required by the Department and the Railroad.
- Submit all Railroad Submittal Packages for review by the Department as set forth in Section 17.6 (*Submittals*) to support the submission and execution of the Construction and Maintenance Agreement.

17.5 Construction Requirements

17.5.1 Railroad Operations

No adjustment in schedule will be allowed due to changes in railroad activities caused by other projects as further discussed in Section 1.2.6 (*Coordination of the Work*).

Prior to any Work within Railroad ROW, Design-Builder must execute Exhibit C-1 (Agreement between Railroad and the Contractor), which is attached to the Construction and Maintenance Agreements between the Department and the Railroad.

17.5.2 Railroad Flagman(s) Services

Design-Builder must determine the number of Flagman(s) days required and submit a request to the Department and the Railroad for any Flagman(s) service Work. Design-Builder is responsible for any costs associated with Flagman(s) services required for the Project, and such Flagman(s) service Work will be performed by Railroad Flagman(s) in accordance with the executed Construction and Maintenance Agreements as set forth in Section 6.2.1 of the Contract.

Design-Builder shall provide written notice for Flagman(s) services (location and duration) to Railroad and the Department 30 days prior to the Flagman(s) service commencing. No Work will commence until Design-Builder receives in writing assurance from the Railroad Local

Representative that arrangements have been made for Flagman(s) service, as may be necessary, and receives permission from Railroad Local Representative to proceed with the Work.

17.5.3 Operational Safety

Design-Builder must comply with and prove successful completion of roadway worker training courses by all construction personnel entering Railroad ROW to perform any Work. Personnel of any Design-Build-Related Entity working on Railroad ROW must comply with the Railroad requirements regarding personal protective equipment (PPE) and Work within the Railroad ROW.

17.6 Submittals

Submittals for the railroad crossings for the Department and the Railroad shall meet or exceed the requirements described in Section 3 of the *BNSF Railway – Union Pacific Railroad, Guidelines for Railroad Grade Separation Projects*, dated January 24, 2007 for Overhead Structures and as specified in these Technical Provisions. Submittals will include, as a minimum, the documents identified below for each stage of design development. Design-Builder shall provide submittals as set forth in Section 3 (*Design Quality Management*).

17.6.1 Stage 1 Design

In addition to the required Submittals described in Section 3.9.1 (*Stage 1 Design*), Design-Builder shall submit the Design Documents for the Railroad *Concept Submittal* as described in the Railroad Guidelines for the following to the Department and the Railroad for review and comment.

- G941 Railroad Submittal Package
- GCI Overpass Railroad Submittal Package

17.6.2 Stage 2 Design

In addition to the required Submittals described in Section 3.9.2 (*Stage 2 Design*), Design-Builder shall submit the Design Documents for the Railroad's *30% Submittal* as described in the Railroad Guidelines for the following to the Department and the Railroad for review and comment.

- G941 Railroad Submittal Package.
- GCI Overpass Railroad Submittal Package

17.6.3 Released-for-Construction Design

In addition to the required Submittals described in Section 3.9.3 (*Released-for-Construction Design*), Design-Builder shall submit the Design Documents for the Railroad's *100% Submittal* as described in the Railroad Guidelines for the following to the Department and the Railroad for review, comment, and approval. The Railroad approved Railroad Submittal Packages will be include in the Construction and Maintenance Agreements.

- G941 Railroad Submittal Package.
- GCI Overpass Railroad Submittal Package

17.6.4 Final Design

Refer to Section 3.9.4 (*Final Design*).

17.6.5 Working Drawings

Refer to Section 3.10 (*Working Drawings*).

17.6.6 Record Drawings

Refer to Section 3.11 (*Record Drawings*).

18 UTILITIES

This Section 18 (*Utilities*) provides information on Design-Builder's, the Department's, and Utility Owner's roles and responsibilities associated with an existing or new Utility or Utility service including but not limited to how a Utility is to be protected, adjusted, upgraded, constructed, or incorporated into the Construction Work of the Project. A Utility Adjustment may be necessary to accommodate the Project for one or both of the following reasons: (a) a physical conflict between the Utility and the Project, including its construction, operation, maintenance, or use; and, as applicable, (b) an incompatibility between the Project as designed and the Utility based on the requirements of the applicable Utility Adjustment standards and applicable Government Rules.

The Department's identified existing Utility information is included in the RIDs, and includes a potential Utility Impact Matrix. Design-Builder's use of the Utility information is as set forth in Section 3.4 and Section 6.4 of the Contract. Potential Utility conflicts associated with the Reference Design have been identified and brought to the attention of Utility Owners. Design-Builder shall identify and confirm the existing Utility facilities as described in Section 18.3.3 (*Identification of Utility Facilities*).

The Department has or is entering into agreements with Utility Owners to provide the preparation of various preliminary planning, design, and schedule activities for the Utility Owner facilities potentially impacted by the Project. These agreements are titled Preliminary Utility Work Packages and are described in Section 18.1.6 (*Preliminary Utility Work Packages*). The Utility Owner's preliminary planning, design, and time to perform the Utility Owner's Utility Adjustment Work is based on the Reference Design.

Design-Builder shall conduct all Work necessary to meet the requirements of this Section 18 (*Utilities*) to satisfy all functional needs and characteristics of the Project, including performing and coordinating all Work associated with Utility Adjustments. Design-Builder shall enter into Utility Agreements with Utility Owners to perform or caused to be performed, all Design Work and Construction Work. In addition Design-Builder shall execute any additional agreements and permits as necessary to perform the Work.

Design-Builder shall ensure that Utility replacements are capable of providing services at least equal to that offered by the existing Utility as of the Setting Date, unless the Utility Owner has specified a lesser replacement. Betterments or other Utility Enhancements are not included in the Work unless otherwise specified as set forth in Section 6.4.1 of the Contract.

Design-Builder shall be responsible for providing for construction and connection of new Utility services as applicable for ITS, signs, lighting, signals, and landscaping included as part of the Department's Project Infrastructure, Local Agency Project Infrastructure, and Locally Operated ITS System. Design-Builder shall identify and resolve all additional Utility conflicts resulting from Design-Builders Design Work and Construction Work.

The limits of Utility Adjustment Work of existing Utility facilities shall extend as far as is necessary to accommodate or permit Construction Work of the Project, whether inside or outside the Project ROW.

18.1 General

18.1.1 Utility Owners

Utility Owners have been identified as having Utilities within the Planned ROW Limits. A list of all Utility Owners known to own or operate Utilities within the Planned ROW Limits, along with contact information, is provided in the Utility Impact Matrix located in the RIDs.

18.1.2 General Requirements

Design-Builder shall provide one point of contact that will attend all meetings and will coordinate all design and construction activities with the Department Utility Construction Manager as well as the Utility Owner Project Representative (regardless of who performs or pays for any proposed Utility Adjustment Work) in formalizing the design, the location of the Utility facility, and the potential impacts of Utility Adjustment Work. Design-Builder shall perform or cause to be performed all Design Work and Construction Work to protect, temporarily relocate, and/or construct the facility as applicable for the Utility type, subject to the policies and requirements of the Department, and Utility Owner. See Section 18.2.1.1 (*Design-Builder's Utilities Design/Construction Coordinator*).

Design-Builder shall perform the following Work with respect to Utilities as follows:

1. Comply with all provisions of the Preliminary Utility Work Packages as part of the RFP.

2. Minimize the extent of the Utility impacts.

3. Identify any additional existing utility conflicts as defined in Section 6.4.1 of the Contract, and in Section 18.3.3 *(Identification of Utility Facilities*) to the extent of a required relocation if Utility conflicts cannot reasonably be avoided, and coordinate as necessary to accomplish each; includes providing and specifying a mutually agreeable proposed relocation solution. Coordinate the proposed relocation with the location of other Utility facilities present at the site to ensure that all Utility facilities are accommodated.

4. Provide all coordination, surveying, potholing, and traffic control for all Utility Adjustment Work, regardless of who is performing the Utility Adjustment. These costs will not be back-charged to the Utility Owner(s) or included in any change orders to the Department.

5. Provide all Incidental Utility Work as necessary for Utility Agreements relating to service connections and Line Extension Agreements (LEAs) for service pedestals. See TP Section 18.3.5 Paragraph 3 for further information. Utility easements needed for new or relocated utility service connections and service pedestals shall be located within the Project ROW.

6. Keep Utility Owners, the Department, and the Department Utility Construction Manager well informed of Project construction progress and schedules; invite all parties to all Utility-related or schedule-related meetings.

7. Cooperate with the Utility Owner(s) to solve Adjustment installation issues and to allow Betterments without causing the Department or Utility Owner(s) to incur any unnecessary expenses, Change Orders, or project construction delays, and remain consistent with the Project's Baseline Schedule.

8. Work with the Utility Owner(s) identified in this Section 18 (*Utilities*), the Utility Impact Matrix included in the RIDs, and those subsequently identified pursuant to Design-Builder's supplemental investigation and establish schedules to perform Utility Adjustment Work that accommodates the overall Project Schedule.

9. Coordinate with those Utility Owner(s) who perform their own Utility Adjustment by scheduling adequate time to accomplish their Adjustment, as defined in Design-Builders final Design, and Utility Agreements with the Utility Owners.

10. Utility conflicts discovered during design and/or construction shall be coordinated with the Utility Owner and the Department. Design-Builder shall develop procedures for addressing Utility conflicts discovered during design and/or construction.

11. Evaluate and discuss the possible elimination of Utility conflicts with the Utility Owner(s).

12. Establish the mitigation approach to be implemented at each specific Utility location.

13. Ensure that all relocated facilities are acceptable to the Department and the Utility Owner.

14. The Project Schedule shall include all Utility Adjustment Work, whether to be performed by Design-Builder or Utility Owner,, including design, material procurement, and construction.

15. Provide to the Department weekly updated report of events (including all Utility Owner coordination meetings, design progress, and construction progress) and the revised schedule as it relates to design and construction progress of Utility Adjustment Work.

16. Monitor the progress of Utility Owner work and notify the Department if there is cause to believe that the Utility Owner will not meet the specified timeframe(s) for design review of Design-Builder's plans, construction, or timely inspection. Provide such notice to the Department within 48 hours of discovery.

17. Provide X, Y, and Z coordinate Record Drawings for the Utility Adjustment Work performed by Design-Builder per Section 18.3.8 (*Record Drawings*).

18. Notify the Department Utility Construction Manager and Utility Owner Representative 7 days prior to starting any Utility Adjustment Work. Also, for unforeseen Utility interruptions, contact the Department Utility Construction Manager and Utility Owner Representative as soon as possible.

19. Maintain the positive working relationship the Department has developed with the Utility Owner(s) in their cooperative participation and support of the Project.

20. Design-Builder shall not bury or conceal any portion of the Work for the Utilities Work that has not been inspected and accepted by the Utility Owner. Any Work for the Utilities buried or concealed without being inspected and accepted by the Utility Owner shall be exposed by Design-Builder.

21. Design-Builder is responsible for Utility service expenses when modifying existing Utilities serving NDOT and/or Local Agency facilities and may not utilize existing Utility sources for any temporary connection, unless otherwise approved by NDOT. Design-Builder shall

furnish temporary, relocated, and new Utility service to all required locations and satisfy all requirements, as specified by the Utility Owner, for the complete and operational Utility service to all elements of the Work, including relocations and connection to service points necessitated by the Project design. Design-Builder is responsible for all service-provider construction costs, connection fees, and any additional equipment, from NTP2 through Final Acceptance. Consumption charges for existing Utility service, including water and electrical, will remain the responsibility of NDOT and/or Local Agencies, whether the Utility service is in its original location, temporary location, or permanent relocation position.

22. Provide any coordination, traffic control (per NDOT and/or Local Agency Standards and the MUTCD), and required surveying.

23. Verify the proposed location prior to any Utilities being placed in their final position, when any of the foregoing Work becomes necessary due to either DB Utility Work or Adjustment work performed by a Utility Owner within the Project ROW.

24. Extend all existing utility casing to limits required by the Departments standards. Utility plans and Utility Impact Matrix do not show location and size of existing casings. Design-Builder shall be responsible to work with the Utility Owners to locate and extend existing casings within the Project ROW.

18.1.3 Utility Design and Construction Constraints

All Utility Adjustments and related Work necessitated by the Project, whether designed and, as applicable, constructed by Design-Builder or the Utility Owner, that are to be newly installed, adjusted, or upgraded as a result of the Work, shall be placed in accordance with the applicable requirements of the Contract Documents including the Project Standards and this Section 18 (*Utilities*), Governmental Approvals, applicable Government Rules, Adjustment Standards, Department policies and procedures including the NDOT *Right-of-Way Manual*, all applicable occupancy permit regulations, and the terms and conditions of the encroachment permit for the state. See Sections 6.3 through 6.10 of the Contract for additional provisions governing Utility Adjustment Work.

For each Adjustment or installation, Design-Builder, in coordination with the Utility Owner, shall be responsible for verifying that the adjusted Utility, as designed and constructed, is compatible with and interfaces properly with the Project Final Design and shall accommodate the anticipated settlement impacts, ensure that Utilities operate effectively during and after Construction Work, and satisfy the requirements of the Utility Owner. Design-Builder also shall be responsible for costs associated with relocating or strengthening Utilities, and protecting in place as necessary.

18.1.4 Abandoned and/or Dormant Utilities

Unless specifically noted otherwise in the Contract Documents or Preliminary Utility Work Packages, or directed otherwise in writing by the Department, Design-Builder is required to remove abandoned and/or dormant Utilities, Utilities that contain Hazardous Material, and all existing utility services abandoned or not within the Project whether they have been identified or not.

Unless specifically noted otherwise new Utilities shall not be placed within, nor shall existing Utilities remain within, the pavement section of I-15 highway and Control of Access. Abandoned and/or dormant utilities shall not be allowed within the pavement section of the I-15 highway and

shall be removed before placement of the pavement section. Existing utilities, identified or not, of any size that fall within the I-15 highway pavement section (below subbase) shall be removed. Unless specifically noted otherwise all existing Utilities in use, not scheduled to be removed, relocated, abandoned, or placed in a state of dormancy shall be removed within the Control of Access.

18.1.5 Standard of Care Applicable to Utility Work

Design-Builder shall contact "Call Before You Underground" at 1-702-432-5300, and "Call Before you Dig" at 1-800-227-2600 or 811 and 1-702-455-7544, and "Call Before you Overhead" at 1-702-227-2929 before commencing any Construction Work, and shall be responsible for requesting mark-outs for Utilities whose owners are not members of the locate systems. Design-Builder shall not relocate or remove any Utility without the Utility Owner's written consent, unless otherwise directed by the Department. At Substantial Completion, the condition of all Utilities shall be safe and permanent, as before.

If any Utilities are damaged by Design-Builder's Work, Design-Builder shall immediately notify the affected Utility Owner and the Department. The Utility Owner or the Department may direct Design-Builder to correct the damage or cause the damage to be repaired at Design-Builder's expense. All repairs by Design-Builder shall be performed in accordance with Good Industry Practice as well as all conditions stated in the Contract Documents, including this Section 18 (*Utilities*).

Design-Builder shall include provisions for its obligations with respect to Utilities in accordance with Section 2 (*Quality Management System*).

18.1.6 Utility Agreement Process

18.1.6.1 Preliminary Utility Work Packages

The Department has entered or is in the process of entering into agreements with Utility Owners defined as Preliminary Utility Work Packages. Through these Preliminary Utility Work Packages, the Department has directed Utility Owners to provide preliminary planning of each Utility Adjustment, to define schedule durations for completing design, completing construction, procurement of long lead materials,; perform preliminary designs; provide preliminary cost estimates; identify replacement ROWs (if within Project ROW); identify concurrent utility relocations; and develop conceptual scopes of services defining the Work. In addition, the Preliminary Utility Work Packages shall identify Cost Liability. Copies of these proposed Preliminary Utility Work Packages are included in the RID. The Preliminary Utility Work Packages will include the following:

1. Allocation of roles and responsibilities for the design and construction Work between Design-Builder and the Utility Owner. For example, a Utility Owner may commit to self-performing the remaining Utility Adjustment Work.

2. Utility Owner's preliminary design, including allocation of Cost Liability, identification of long-lead elements, preliminary cost estimates, a description of replacement easements (within Planned ROW Limits), timeframes and commitments, based on the Reference Design.

3. If Utility Owner elects to self-perform the Utility Adjustment Work, estimated time frames and estimated schedules to perform the Utility Owner's final design, material acquisition, engineering review, and construction activities.

4. Utility Owner concurrent Utility Adjustment Work that needs to be coordinated with Design-Builder's Project Schedule.

Preliminary Utility Work Packages provided by the Department for all Utility Owners with the exception of Cox Communications, LVVWD, and CLV sanitary sewer.

18.1.6.2 Utility Agreements

Utility Agreement is a Design-Builder Utility Agreement or any other agreement, as the same may be amended from time to time, between the Design-Builder and a Utility Owner, providing specific details for the Adjustment of one or more particular Utilities. The Utility Agreement shall include specifics of the Adjustment Work, including design and construction requirements, Adjustment Work review and construction inspection, and details of Design-Builder's obligations to reimburse Utility Owner for costs for which the Utility Owner is entitled to reimbursement pursuant to the Preliminary Utility Work Package. A document is a Utility Agreement if it meets the foregoing definition, without regard to the title or form of the document.

Design-Builder is responsible to enter into a Utility Agreement with Utility Owners for all Design Work and Construction Work associated with the Utility Adjustment. If Design-Builder's Work affects the planning and design provided in the Preliminary Utility Work Packages necessitating a change by the Utility Owner, Design-Builder is responsible to enter into a separate Utility Agreement for the revisions necessary and make accommodation to Design-Builders Project Schedule for the revision. Design-Builder is responsible for all cost, time and effort for revisions to the Utility Owner's Preliminary Utility Work Packages.

If Utility Owner elects to self-perform the final design of their Utility, Design-Builder is responsible during the development of the Utility Owner's final design to verify that the Utility Owner's design meets the Project Standards and requirements of the Contract Documents. For work to be performed by Utility Owners, Design-Builder's Project Schedule shall allow, at a minimum, the time for Utility Adjustment Work to be perform by the utility Owner as set forth in the Preliminary Utility Work Packages for each of the following: design mobilization, completion of design, relocation mobilization, materials procurement, and construction of the relocation.

Design-Builder shall be responsible for coordinating with the Utility Owner on procurement schedules of long-lead elements identified in the Preliminary Utility Work Packages and to support relocation schedules pursuant to the Preliminary Utility Work Packages.

Utility Agreements will note Utility Owner requirements; allocation of roles and responsibilities for the Design Work and Construction Work, performance, inspection, schedule and acceptance of Utility Adjustments; allocation of costs and reimbursement; Betterments; requirements for notifying Utility Owners of Design Work changes, requirements for notifying Utility Owners prior to commencement of construction Utility Adjustment Work; and ROW matters. Design-Builder must provide all required data and support necessary to assist Utility Owners in obtaining final design Utility Agreements, including coordination, providing preliminary design, information packages, and exhibits.

Design-Builder shall provide to the Utility Owner approved Release for Construction Submittal documents and exhibits provided by the Utility Owner which include cost estimates; schedule for performance of the work that complies with the Project Schedule; description of the Utility Adjustment Work to be performed; description of the location of the Utility Adjustment Work; identification of any Betterments; and any necessary ROW documents. Once Design-Builder has provided this Submittal to the Utility Owner, no material modifications to the Work shall be made without a revised Submittal by Design-Builder to the Utility Owner.

18.1.6.2.1 Authority to Execute Agreements

The terms of Utility Agreements and any amendments will be set by Design-Builder and the Utility Owners. Design-Builder shall submit all Utility Agreements to the Department for review and approval.

If Design-Builder identifies conflicts with a Utility owned by an entity other than as identified in the Utility Impact Matrix, Design-Builder will execute a Utility Agreement with the unlisted Utility Owners. Design-Builder shall submit the Utility Agreement to the Department for review and approval.

18.1.7 Not Used

18.1.8 Additional ROW and Easements

Design-Builder shall identify on the Design Documents any Utility easements or other real property rights or interests, located inside of the Planned ROW Limits, which must be quitclaimed or otherwise relinquished to accommodate the Utility Adjustment Work. Identify the need for and prepare all real property documents in connection with Utility Adjustment (whether for acquisition, replacement or relinquishment), including licenses, easement deeds, joint use and consent to common use agreements, and any necessary amendments to the foregoing. Indicate the locations to be covered by such documents on the Design Documents. Prepare all required documentation needed to support each such document, and arrange for the execution and (where appropriate) recordation of same. All documents described in this Section 18.1.8 are subject to the Department and Utility Owner approval as part of a Utility Agreement.

If Design-Builder requires additional Utility easements or other property interests, other than those included as part of the Department-Provided Property, for which the Utility Owner is entitled to reimbursement pursuant to the Utility Agreement, Design-Builder shall follow the requirements as set forth in Section 21.1 (*Project ROW*). Design-Builder shall be responsible for all costs, time and coordination of effort associated with additional ROW or Utility easements outside of the Department-Provided Property and reimburse the Utility Owner for all cost associated with the acquisition of such Utility easement or the other property interest.

18.1.9 Instructions and Authorizations

Design-Builder shall be responsible for obtaining authorization from the Utility Owner for any Design Work or Construction Work Design-Builder performs on behalf of the Utility Owner, and for verifying that instructions and authorizations are consistent and compatible with Design-Builder's Design Documents.

18.1.10 Utility Owner's Right to Inspect

The Utility Owner has the right to inspect any Work that is to be performed by Design-Builder on the Utility Owner's facilities. The notification requirements shall be included in the Utility Agreement.

18.1.11 Allocation of Responsibilities to Perform Adjustment Work

The allocation of responsibility between Design-Builder and the Utility Owner for performance of the Work necessary for each Adjustment is as follows:

1. NV Energy – As defined in the Preliminary Utility Work Packages.

2. Zayo – Has leased facilities from NVE. NVE is the Utility Owner of these facilities and the Work is defined in the Preliminary Utility Work Packages.

3. SWG – As defined in the Preliminary Utility Work Packages.

4. CL – As defined in the Preliminary Utility Work Packages.

5. Cox Communications – Design Builder shall enter into a Utility Agreement with Cox Communication, for the Utility Adjustment Work associated with demolition, removals, trenching, conduits, vaults, and other Work. Cox Communication will perform the work associated with the installation of the cables and splicing. Design-Builder shall coordinate and schedule the work to be performed by Cox Communication. Cox Communication will perform the work as described in the Cox Communication letter dated April 2, 2013 included in the RID. It is anticipated the Cox Communication underground facilities will utilize joint trench.

6. LVVWD – Design-Builder shall enter into a Utility Agreement with LVVWD to provide all design, materials procurement, testing, construction, demolition, and removals as described in Section 18.3.5 (*Additional Design Requirements)* and Section 18.3.6 (*Construction Requirements).*

7. City of Las Vegas Sanitary Sewer Department – Design-Builder provides all design, materials procurement, testing, construction, demolition, and removals as described Section 18.3.5 (*Additional Design Requirements)* and Section 18.3.6 (*Construction Requirements).*

8. City of Las Vegas - Grand Central / Industrial Connector (GCI) portion of the project along the GCI alignment east of the UPRR ROW.

    a. NV Energy, SWG, CL, and Cox Communication – Utility Owner provides all design, materials procurement, testing, inspections, and construction of facilities that require Adjustments. Design-Builder shall coordinate Utility Owners design and construction work with Design-Builders design and construction work. The City of Las Vegas is invoking the Utility Owners Franchise rights for the utilities located in this area. Utility Owners Adjustments will need to be coordinated with the Design-Builders work. City of Las Vegas Franchise Letters and Franchise Agreements are included in the RIDs. Cox Communication preliminary fiber optic cable relocation exhibit is included in the RIDs.

b. LVVWD – Design-Builder provides all design, material, procurement, testing, construction, demolition, and removals, LVVWD facilities that require Adjustments are included in the RIDs, for design requirements see Section 18.3.5, for construction requirements see Section 18.3.6.

c. City of Las Vegas Sanitary Sewer Department – Design-Builder provides all design, materials procurement, testing, construction, demolition, and removals that require Adjustments are included in the RIDs, for design requirements see Section 18.3.5, for construction requirements see Section 18.3.6.

9. Kinder Morgan – Design-Builder shall coordinate all construction activities near the Kinder Morgan existing gas pipelines located within UPRR ROW per the Kinder Morgan Guidelines for Design and Construction near Kinder Morgan Hazardous Liquid Operated Facilities included in the RIDs.

10. Level 3 Communications – Design-Builder shall coordinate all construction activities near the Level 3 Communications fiber optic facilities located within UPRR ROW per information provided by Level 3 Communication included in the RIDs.

The allocation of responsibility stated above does not limit or otherwise affect Design-Builder's obligations to perform incidental Utility Adjustment Work.

Without limiting Design-Builder's obligations under this Section 18.1.11 (*Allocation of Responsibilities to Perform Adjustment Work*), the Department will retain all rights to provide approvals, consents, permissions, agreements, and authorizations called for under any Preliminary Utility Work Package and/or this Section 18 (*Utilities*), unless otherwise provided in the Contract Documents.

18.1.12 Protection of Utility Facilities

Design-Builder shall prepare a reasonable "Protection Plan" for all Utility facilities to be left in place and protected. The Protection Plan shall be submitted to the Department for review and comment. Design-Builder also shall obtain written approval of the Protection Plan from each Utility Owner that has a Utility that will be impacted by the Work on the specific facility to be protected.

18.1.13 Protection of Utility Facilities Already Relocated

Unless otherwise agreed by the Department in its sole discretion, Design-Builder's Final Design for the Project shall accommodate the facilities listed below, that have already been relocated. The cost for any subsequent relocations, Adjustments, removals, or alterations to these facilities, as required by Design-Builder's design, will be the responsibility of Design-Builder.

Relocated Facilities
A 36-inch water line belonging to and maintained by the LVVWD located within the Oakey Boulevard alignment, within the State's I-15 ROW. This work was accomplished under District 1 permit 200770-2012.
Certain transmission lines, distribution lines, and communication lines belonging to and maintained by NV Energy. The relocation consisted of replacing and realigning three transmission poles and undergrounding the distribution and communication lines. This project took place across and adjacent to the State's US 95 ROW and was accomplished under District 1 permit 200616-2012.

Certain transmission lines and communication lines belonging to and maintained by NV Energy. The relocation consisted of replacing and relocating transmission poles, and transmission and communication lines along the I-15 corridor. This project took place across and adjacent to the State's I-15 ROW and was accomplished under Department Agreement P476-14-030.

18.1.14 Permits

Utility Adjustments and Utility facility encroachments on state, county, or city roads, streets, and routes may need a permit from the jurisdictional municipality. Design-Builder is responsible for obtaining, or ensuring that the Utility has obtained, the required permits before the Adjustment construction begins or the Utility is allowed to construct its facility.

Any water Utility Adjustments also may require permits from the Las Vegas Valley Water District (LVVWD). If Design-Builder is responsible for the Utility Adjustment Work of a water utility, Design-Builder shall obtain the required Governmental Approvals.

18.2 Utility Coordination Requirements

Design-Builder shall provide information, as required, and maintain close coordination with the Department and the Utility Owners to ensure timely completion of Utility Adjustments.

Design-Builder shall let the Department, or its representative, know if any Utility Owner fails to cooperate. Refer to Section 6.7 of the Contract for additional information regarding cooperation of Utility Owners.

Design-Builder shall allow for the time required to accomplish the tasks and activities necessary to design and adjust Utility facilities in the Project Baseline Schedule and Project Status Schedule. The schedule shall be consistent with any times specified (a) in the Utility Agreement, or (b) through coordination with the Utility Owner.

If work by one or more Utility Owners is contingent on work by Design-Builder or another Utility Owner, Design-Builder shall keep all parties informed of the status and estimated completion date for the advance work in order to give each Utility Owner as much notice as possible to schedule crews and material for the Utility Owner's adjustment work.

18.2.1 Department Utility Construction Manager

The Department shall provide a Department Utility Construction Manager to act as the overall Department Utility coordinator to ensure adequate coordination during Final Design development, mobilization activities, and performance reviews of Utility Adjustment Work. The Department Utility Construction Manager shall coordinate, cooperate, and work with the Utilities Design/Construction Coordinator and other Department representatives. Responsibilities of the Department Utility Construction Manager include Design-Builder Utility Adjustment Work oversight, standard and specification adherence, and performance reviews of Design-Builder while working on- and off-site. This includes but is not limited to quality, timeliness, and performance in association with Utility Adjustments until all Utility Adjustment Work is completed.

Design-Builder shall not be relieved of obligations as set forth in Section 3.3.9 and Section 5.6.2 of the Contract.

18.2.1.1 Design-Builder's Utilities Design/Construction Coordinator

Design-Builder shall provide a Utilities Design/Construction Coordinator during design and construction to act as the overall coordinator to ensure adequate coordination during Design Work development, mobilization activities, and performance reviews of Utility Adjustment Work. The Utilities Design/Construction Coordinator shall be a Key Personnel as described in Section 1.6.3 (*Key Personnel*).The Utilities Design/Construction Coordinator shall coordinate, cooperate, and work with the Department Utility Construction Manager and other Department representatives. Responsibilities of the Utilities Design/Construction Coordinator include coordinating Design-Builder oversight, site administration, standard and specification adherence, and performance reviews of Design-Builder while working on- and off-site, including but not limited to safety, quality, timeliness, and performance.

The Utilities Design/Construction Coordinator shall be available to coordinate Utility Adjustment until all Utility Adjustment Work is completed.

The Utilities Design/Construction Coordinator shall maintain a record of all design and construction activities for all Utility Adjustment Work that has been performed by the Design-Builder, and all Utility Adjustment Work that has been designed and released for construction after the issuance of NTP2.

The Utilities Design/Construction Coordinator shall:

1. Act as a liaison between the Department Utility Construction Manager, Department, Utility Owner, and Design-Builder workforces as needed.

2. Keep a record that Design-Builder is in compliance with the Preliminary Utility Work Packages.

3. Provide support in Utility Adjustment Work problem resolution.

4. Communicate Utility Adjustment Work status to various levels of site personnel including Department Utility Construction Manager, management, other company organizations, contractors, and suppliers.

5. Monitor the successful completion of assigned Utility Adjustment Work-related Project deliverables and milestones.

6. Distribute Design Documents that have been reviewed by the Utility Owner and received consultation and written comment by the Department.

7. Provide notification of construction dates.

8. Keep a record of meetings with Utility Owner(s).

9. Obtain signature of Utility Owner on Design Documents indicating that the plans are released for construction.

10. Keep a record of when Utility Owner inspectors are present.

11. Provide any revisions to the Design Documents.

12. Provide date(s) that construction was completed.

13. Obtain signature and acceptance of Utility Owner(s) on Record Drawings/ as-built Plans and all other Record Drawing/ as-built requirements stipulated in the Department's Utility Regulations.

14. Provide a weekly summary and schedule of Utility Adjustment Work activities.

18.2.2 Meetings and Correspondence

Design-Builder shall keep Utility Owner(s) (a) well informed of Project changes and (b) involved in making Project design decisions so they can provide uninterrupted service to their customers or minimize interruption of services. Design-Builder shall notify Utility Owner(s) at least 24 hours in advance of any Work in the vicinity of their facilities and provide 48 hours prior notice of potential impacts on service.

18.2.2.1 Startup Meeting Topics

Following issuance of NTP1, Design-Builder shall schedule startup meetings with each Utility Owner and the Department Utility Construction Manager to review the following:

1. Inventory of facilities.

2. Terms of the Preliminary Utility Work Packages, including allocation of responsibilities.

3. All potential items of Work that affect the Project Schedule.

4. The schedule for the Project.

5. Potential Utility conflicts and relocations.

6. Timeframes to design, procure materials for, and construct relocations.

7. Concurrence on the number and extent of known affected Utility lines and issues.

8. The possibility of eliminating conflicts.

9. Mitigation approach to be used at each specific location.

10. Procedures for addressing conflicts discovered during design and/or construction.

11. Begin initial coordination of Utility Agreements.

18.2.2.2 Progress Meetings

Design-Builder shall schedule monthly Utility meetings, at a minimum, with the Department to discuss Project progress, issues, and planned Work for all phases of Utility Adjustment Work, including design and construction. Design-Builder shall notify the Department at least one week in advance of each meeting. Utility Owner(s) will be invited to progress meetings.

Design-Builder shall develop the agenda for these meetings jointly with the Department. These meetings will include Design-Builder's and Department's personnel who have responsibility for

Utilities. Design-Builder shall take and maintain meeting minutes of all the Utility meetings and distribute copies of the minutes to participants, including representatives of Utility Owner(s) who have facilities in the areas reviewed (even if they did not attend the meeting) within 5 Business Days after the meeting.

18.2.2.3 Correspondence

Design-Builder shall maintain documentation of contact and discussions with Utility Owner(s). The Department will be provided with copies of all correspondence between Design-Builder and any Utility Owner within 1 Business Day of receiving or sending the correspondence, as applicable. Design-Builder also shall provide to the Department, or its representative, copies of all correspondence between Design-Builder and any Utility Owner within 7 days after receiving or sending the correspondence, as applicable.

18.2.3 Design-Builder's Coordination Requirements

All Utility Adjustments will require full cooperation between Design-Builder and Utility Owners in conducting their respective operations. Design-Builder is responsible for all coordination with the affected Utility Owners as necessary to accomplish each Adjustment in a timely manner, including developing, negotiating and entering into Utility Agreements coordinating scheduling, Design Review, inspections, and approvals; monitoring the progress of Utility Owners; and resolving design issues with the Utility Owners.

As part of its coordination responsibilities, Design-Builder shall:

1. Coordinate, develop, and prepare all Utility Agreements necessary to perform the Work.

2. Keep Utility Owners fully informed of Project Schedule and notify Utility Owners at least 48 hours in advance of any Work in the vicinity of the Utility Owners' facilities, including coordinating with regard to design, construction, and inspection of Design-Builder's Work. This coordination shall occur whether Design-Builder is protecting the facility in place or the Utility Owner is to protect their facility.

3. Provide Utility Owners with the Project Schedule for their respective Adjustment Work as soon as practicable following NTP1 or compliance, and notify the Utility Owners of any significant changes to the Project Baseline Schedule as soon as practicable.

4. Keep Utility Owners well informed of changes to the Design Documents for the Utility Adjustment Work that affect Utility Owner facilities, including changes that may affect their Utility facilities.

5. Consider, to the extent practicable, Utility Owners' needs for the allocation of resources to perform their relocations in a timely way.

6. Keep Utility Owners involved in making the decisions that affect their facilities so that Utility Owners are able to provide uninterrupted service, or to provide service with the least interruption practicable, to their customers.

7. Coordinate the Utility Adjustment Work to avoid, to the extent practicable, multiple Utility Adjustments of the same Utility and/or other duplication of work by Utility Owners.

8. If the Utility Owner is performing construction, confirm that the Utility Owner has obtained all permits necessary for the Adjustment work (including permits from the Governmental Entities), other than those required to be obtained by Design-Builder. If Design-Builder discovers that the Utility Owner does not have the necessary permits or is in violation of the permits or of the applicable Utility Agreements, notify the Department in writing immediately after discovery.

9. Give the Utility Owners 48-hour notice of potential impacts to service, or other notice as agreed to in the Preliminary Utility Work Package and Utility Agreement.

10. Cooperate with the Utility Owners to solve Utility Adjustment and, as applicable, installation issues to the extent that such Utility Adjustments and, as applicable, installations are part of the Utility Adjustment Work, as otherwise set forth in the Contract Documents, and without causing the Department to incur any unnecessary expense to the Project or causing the Utility Owners to incur unnecessary expense.

11. Act diligently in continuing the positive relationship that the Department has developed with the Utility Owners.

12. Coordinate with those Utility Owners that perform their own work by scheduling adequate time to accomplish their work, as per the Preliminary Utility Work Packages.

13. Review each Utility conflict and consider its effect on the Project.

14. Develop procedures for addressing Utility conflicts discovered during design development and, as applicable, Construction Work.

15. As part of the Utility Agreements develop, negotiate, and provide a schedule in coordination with the Utility Owners for the design and construction of all Utility Adjustments, as well as updates to the Project Baseline Schedule in accordance with the Contract Documents.

16. Identify critical activities and sequences as they affect the Utility Owners and plan to effectively mitigate impacts.

17. Designate a Utilities Design/Construction Coordinator, experienced in Utility coordination, to be the principal contact for all Utility-related the Project activities.

18. Through its Utilities Design/Construction Coordinator, coordinate, cooperate, and work with those Utility Owner representatives on the Utility contact list (initially, the list set forth in the Utility Impact Matrix included in the RIDs, to be updated as new or substitute contacts are identified), Design-Builder third-party design and construction managers, and the Department Utility Construction Manager.

19. Monitor the progress of Utility Owner work and provide notice to the Department in accordance with Section 6.7 of the Contract.

18.2.4 Betterments

Any Betterment originally included in or added to the Work, and any Betterment performed as part of a relocation by a Utility Owner or its contractors, is subject to the same standards and requirements as if it were a required relocation.

Some Utility Owners may request Betterments and other Utility Enhancements to their service facilities as a result of the required Adjustments of their facilities. Design-Builder shall provide all coordination, including all definitive cost estimates and billing information, necessary to address requested Betterments. Design-Builder shall communicate and cooperate with Utility Owners performing their own Betterments as necessary or appropriate in light of Project requirements. Any such Utility Enhancements shall be governed by and comply with Sections 6.6 and 6.3.4 of the Contract.

Design-Builder shall keep the Department informed as to the status of requests for and negotiations with Utility Owners concerning Utility Enhancements.

18.3 Design Requirements

The design of the Utility Adjustment Work and protections-in-place for the Project's final Design Documents shall be in accordance with the Contract Documents. Design-Builder shall obtain the clarification of any unresolved ambiguity before proceeding with Design Work or Construction Work.

Design-Builder shall coordinate all Design Work and Construction Work activities with the Utility Owner(s), including Design Work and Construction Work of Utility facilities, subject to the requirements of the Preliminary Utility Work Packages and Utility Agreement(s). For all Design Work and Construction Work, reviews, and approvals, Design-Builder shall comply with the requirements in the Preliminary Utility Work Packages and Utility Agreement.

For certain Utility Owners, Design-Builder shall perform the Design Work and Construction Work for the Utility facilities. Design-Builder shall make available qualified personnel to provide Design Work as well as perform Construction Work on behalf of the Utility Owner.

In case of a discrepancy or conflict between the information in this section and an executed agreement, the executed agreement shall govern.

18.3.1 Responsibility for Design of Utility Adjustment Work

The allocation of responsibility for the design of each Utility Adjustment is described in the Preliminary Utility Work Packages included in the RIDs and shall be in accordance with Nevada Administration Code (NAC) 408.

Where the Utility Owner is preparing Utility Adjustment Plans, Design-Builder shall review and approve the Utility Adjustment Plans for consistency with the Project's Design Work and verify they are in accordance with the requirements of the Contract Documents and the Preliminary Utility Work Packages, and shall obtain the Department's review and comment.

Where Design-Builder is responsible for Design Documents for Utility Adjustment Work, Design-Builder shall ensure the Utility Adjustment Design Documents are compatible with and interfaces

properly with the Project. The Utility Owner will be provided time to review and approve the Design Documents for Utility Adjustment Work for consistency with adjustment standards.

If Design-Builder Design Documents result in a design change as described in Section 6.5.1 of the Contract, Design-Builder shall be responsible for entering into any Utility Agreements and all costs for the design and construction of additional Utility Adjustment Work.

If Design-Builder changes the Design Documents after the Utility Owner has reviewed and approved a Design Document for Utility Adjustment Work, Design-Builder shall be responsible for the cost of any subsequent Design Work and work by the Utility Owner.

If Design-Builder changes the Design Documents after the Utility Adjustment Work has been performed resulting in a new conflict, all costs for the design and construction of additional Utility Adjustment Work shall be the responsibility of Design-Builder. The cost associated with these changes will not be subject to any Change Order to the Department. See Section 6.5 of the Contract. Design-Builder shall make adjustments to Design-Builder Work for any additional time that may be required for Utility Owner to review modified plans and perform Utility Adjustment Work on its facilities when required.

18.3.2 Utility Adjustment Work Design Documents

Utility Adjustment Design Documents need to identify the extent of the Utility Adjustment Work required and clearly show the proposed highway improvements. For the Adjustment Design Documents prepared by Design-Builder, Design-Builder shall prepare and distribute two separate types of Design Documents: one for the Utility Owner and one for the Department. The two separate Design Documents for the Utility Adjustment Work shall be developed as follows:

For Design Documents distributed to the Utility Owner:

1. Prepare detailed Design Documents for each specific Utility conflict in the format desired by the Utility Owner.

2. Identify the extent of the Utility Adjustment Work and clearly show the proposed highway improvements.

3. Submit to the Utility Owner for approval all subsequent changes to the design that have previously been approved. Allow additional time for the Utility Owners to redesign and/or review modifications to plans.

4. Obtain formal design approval signatures for the Design Documents for the Utility Adjustment Work from authorized Utility Owner personnel.

5. Provide Released for Construction Documents signed by both the Utility Owner and Design-Builder to the Department.

6. Correlate all Design Documents for the Utility Adjustment Work with the Project design information and submit them to the Department, Design-Builder's QC/QA Manager, and Department Utility Construction Manager for review prior to construction.

For Design Documents distributed to the Department:

1. Prepare a detail Design Document for each specific Utility Adjustment in the Project plan sheet format.

2. Plan set shall include sufficient information to perform construction staking and survey verification.

3. Include a MOT and TTCP in compliance with Section 12 (*Maintenance of Traffic*) for each Utility Adjustment Work that requires MOT and traffic control.

4. Include submittal information for proper material verification.

5. Include sufficient design detail to allow review and verification of Utility Adjustment Work and show all proposed Utility Adjustment Work design. Show all existing Utilities, as identified by the Department and Design-Builder.

18.3.3 Identification of Utility Facilities

The Department has performed investigations of Utilities within the Planned ROW Limits and provided this information as part of the RID. Design-Builder shall verify the information and perform supplemental Utility investigations as set forth in Section 6.4 of the Contract.

Design-Builder shall take all actions necessary to identify and confirm the existence and exact location, size, and type of all Utility facilities within the Planned ROW Limits or otherwise potentially impacted by the Construction Work, whether or not such Utilities are shown in the Department provided information, and including all potentially impacted service lines and commercial/industrial properties on-site utility routing that are abandoned/dormant or not. Such actions include making diligent inquiry at the offices of Utility Owners, consulting public records, and conducting field studies (e.g., potholing) as appropriate, taking into consideration the possibility that information provided by Utility Owners concerning their facilities may be inaccurate. If Design-Builder discovers Utilities not previously identified that are affected by the Project, Design-Builder shall take the lead in identifying the affected Utility Owner, notifying the Utility Owner and the Department, and executing a Design-Builder Utility Agreement with the affected Utility Owner.

Design-Builder shall submit a Design-Builder’s Utility Conflict Matrix and exhibits reflecting the existence of any and all Utilities likely to be impacted by the Project as set forth in Section 6.4 of the Contract. Design-Builder's Utility Impact Matrix and exhibits must show in plan view all Utilities within the Planned ROW Limits or otherwise impacted by the Project, in each case detailing the type of Utility facility and the Utility Owner's name and contact information. Design-Builder shall update the information provided in the Utility Impact Matrix provided by the Department and associated exhibits with subsurface Utility engineering (SUE) data and submit the same to the Department.

18.3.4 Changes to Utility Adjustment Design

Design-Builder shall be required to obtain written acceptance from the Department and the Utility Owner for any proposed changes to the Utility Adjustment Work after the Design Documents for Utility Adjustment Work are approved and incorporated into the Utility Agreement.

18.3.5 Additional Design Requirements

1. Design-Builder shall comply with the City of Las Vegas specifications when designing and constructing City of Las Vegas sewers. The City of Las Vegas requires that five (5) copies of the sanitary sewer design be submitted for review. City of Las Vegas design specifications and requirements include:

    a. Sanitary sewer design shall be in accordance with *Design and Construction Standards for Wastewater Collection Systems Southern Nevada* (latest edition).

    b. Materials used shall adhere to the City of Las Vegas Standard Specifications, or be listed on the *Design and Construction Standards for Wastewater Collection Systems Southern Nevada* (latest edition) approved materials list.

    c. All sanitary sewer design shall be approved by the City of Las Vegas City Engineer.

    d. Any existing sewers that require relocation are the sole responsibility of Design-Builder. All sewer relocations will be approved by the City of Las Vegas before construction. Design-Builder shall coordinate all work performed to City of Las Vegas Sewer facilities with the Department.

2. Design-Builder shall comply with the LVVWD specifications when designing and constructing LVVWD water facilities. LVVWD requires designs to be submitted for review on their Web site. LVVWD design specifications and requirements include:

    a. Water design shall be in accordance with Uniform Design and Construction Standards for Potable Water Systems (latest edition).

    b. Materials used shall adhere to the LVVWD Standard Specifications and be listed on the LVVWD Qualified Products List of approved materials.

    c. All water design shall be approved by the LVVWD.

    d. Any existing water facilities that require relocation are the sole responsibility of Design-Builder. All water relocations will be approved by the LVVWD before construction. Design-Builder shall coordinate all work performed to LVVWD water facilities with the LVVWD.

    e. Design-Builder shall be fully responsible for taking the necessary measures and precautions when removing and working with asbestos cement pipe (ACP). Design-Builder shall perform all Work and dispose of asbestos-containing materials (ACM) in accordance with all applicable Government Rules and regulations. The Contractor shall follow all LVVWD procedures and comply with requirements of the Clark County Department of Air Quality and Environmental Management for handling and disposal of ACM, including filing notification of demolition and removal, and providing any forms or certification as required.

3. Design-Builder shall be responsible for all Work, materials, and costs associated with obtaining power and maintaining power throughout construction, including coordination

with the power company and obtaining power supply for all electrical Work required for the Project. Design-Builder shall be responsible for completing all electrical-service application materials necessary for obtaining service from the appropriate power company. All required forms and materials shall be submitted to the power company and copied to the Department. Design-Builder shall complete all paperwork, including, but not limited to, Departmental and NV Energy Line Extension Agreements (LEA) when providing power to Design-Builder-designed facilities. Design-Builder also shall coordinate with the Utility Owner(s), pay the cost associated with the service installation, and schedule all Utility connections.

4. Design-Builder shall be responsible for all Work, materials, and costs associated with obtaining water services and maintaining water services throughout construction, including coordination with the water company required for the Project and water supply for all irrigation Work as set forth in Section 5.3.14 (*Irrigation*).

5. Water service meters must meet the requirements of the Utility. Design-Builder shall be responsible for completing all water-service application materials necessary for obtaining service from the LVVWD. All required forms and materials shall be submitted to the LVVWD and copied to the Department. Design-Builder shall complete all paperwork, coordinate with the Utility Owner(s), pay the cost associated with the service installation, and schedule all Utility connections. Design-Builder is responsible for all Utility services during the Design Work and Construction Work.

18.3.6 Construction Requirements

1. City of Las Vegas sewer

   a. Design-Builder is required to follow the National Electric Safety Code when working in the vicinity of electric facilities.

   b. Design-Builder is required to comply with the City of Las Vegas construction specifications when constructing City of Las Vegas sewers. City of Las Vegas construction specifications may include, but are not limited to, the following:

      (i) Design-Builder shall be responsible for fines and/or penalties from Governmental Entities associated with the construction of projects.

      (ii) Design-Builder is responsible for damages to existing City of Las Vegas facilities throughout construction.

      (iii) Sanitary sewer construction shall be in accordance with Design and Construction Standards for Wastewater Collection Systems Southern Nevada (latest edition).

      (iv) Construction of sanitary sewers shall adhere to the City of Las Vegas Standard Specifications including testing of sanitary sewers.

      (v) Materials used shall adhere to the City of Las Vegas Standard Specifications, or be listed in the *Design and Construction Standards for Wastewater Collection Systems Southern Nevada* (latest edition) approved materials list.

(vi) City of Las Vegas inspector shall inspect all construction and be notified a minimum of 2 weeks before construction activity.

(vii) All sanitary sewer construction shall be approved by the City of Las Vegas City Engineer.

(viii) Design-Builder shall not cover or bury any existing sewer access points, including, but not limited to: manholes, air release valves, etc. Design-Builder shall return them to final grade before project completion.

(ix) Sanitary sewer overflows or the potential of sanitary sewage escaping its designated collection line(s) shall be reported immediately to City of Las Vegas Street and Sanitation Division at 702-229-6227 (or 702-229-0291 after hours) for appropriate response by City of Las Vegas. This includes damage caused by Design-Builder or discovery of damage and/or blockage of sanitary sewer lines during investigation or normal work.

c. Damage to City of Las Vegas assets not resulting in sewer overflows or the potential of overflows shall be reported to the City of Las Vegas immediately.

2. LVVWD

a. Continuous inspection will be provided by LVVWD for any work on LVVWD Utilities.

b. Notify LVVWD at least 45 days prior to any proposed shutdowns.

c. Two water main shutdowns may not occur simultaneously.

d. Provide written notification 72 hours prior to any planned shutdown.

e. Design-Builder shall pay all water meter and service connection fees for new service connections.

18.3.7 Restricted and No Work Zones

NV Energy – Electrical Transmission Lines: 69-kilovolt (kV) and 138-kV electrical transmission lines are proposed to cross I-15 north of the Charleston Interchange. Existing 69-kV and 138-kV electrical transmission lines cross I-15 south of the Charleston Interchange and will be relocated by NV Energy. Construction Work near the transmission lines is subject to restrictions to maintain safe distance from the wires; this includes OSHA, state, and local Government Rules. Refer to the “Power Line Safety Handout” and “Mobile Crane Power Line Clearance Worksheet” in the RIDs for additional information.

18.3.8 Record Drawings

For Utility Adjustment Work constructed by Design-Builder, Design-Builder shall provide three sets of Record Drawings for the Utility Adjustment Work; two provided to the Department for the permitting agency, and one for the Utility Owner. The Record Drawings for the Utility Adjustment Work shall comply with as-built requirements from the Utility and as may be stipulated in the state Utility regulations, and shall be part of the Project Record Drawings. A digital copy also will be

provided to the Department in a manner as set forth by the Department's Location Division in the "Special Instructions for Location Consultants" under the heading of "Utility Survey Standards."

For Utility Adjustment Work constructed by the Utility Owner, the Utility Owner will be required, in the Preliminary Utility Work Packages, to provide three sets of Record Drawings to Design-Builder and provide a digital copy to the Department in a manner as set forth by the Department's Location Division in the "Special Instructions for Location Consultants" under the heading of "Utility Survey Standards." Design-Builder shall provide two sets to the Department for the permitting agency along with a digital copy to be provided to the Department in a manner as set forth by the Department's Location Division in the "Special Instructions for Location Consultants" under the heading of "Utility Survey Standards." The Record Drawings for the Utility Adjustment Work shall comply with the as-built requirements stipulated in the state Utility regulations and shall be part of the Project Record Drawings.

18.4 Other Utility Requirements

18.4.1 Notification

Design-Builder shall notify each Utility Owner in writing as required in the Preliminary Utility Work Packages and Utility Agreement prior to beginning any Utility Adjustment Work that may affect any Utility facility, including shutdowns and diversions. Design-Builder shall provide proper notification to each Utility Owner of all temporary Utility Adjustment Work implemented for the convenience of Design-Builder's construction operation.

18.4.2 Inspection

Utility Owners have the right to inspect and test the Utility Adjustment Work performed by Design-Builder. The Utility Owner and Design-Builder shall keep daily records of the Utility Adjustment Work performed. The Utility Owner and Design-Builder shall retain a copy of said daily records and, upon request, supply a copy of each record to the Department. Utility Companies will communicate any concerns or irregularities with the progression of Utility Adjustment Work to the Department, which will forward the concerns to Design-Builder in accordance with the Preliminary Utility Work Packages. Inspection and acceptance of the Utility Adjustment Work by the Utility Owner shall not relieve Design-Builder from the obligation to perform all Utility Adjustment Work in compliance with specifications and any other obligations in the Preliminary Utility Work Packages.

18.4.3 Utility Work Limits

The limits of Utility Adjustment Work extend as far as is necessary to accommodate the Utility Work and the Utility Owner's adjustment requirements, whether inside or outside the ROW and Project limits. Design-Builder shall obtain all necessary permits as needed to complete the Utility Adjustment Work.

Design-Builder shall be responsible for the adjustment of all existing Utilities that may have resided outside the existing ROW and are currently located within the new Project ROW Limits.

18.4.4 Design-Builder-Caused Changes to Utility Owner Work

If the Utility Owner maintains responsibility for the design and, as applicable, construction of the Utility Adjustment and Design-Builder revises the plans affecting the cost or schedule after the

Preliminary Utility Work Packages has been executed, Design-Builder shall be responsible for any additional costs and, as applicable, any schedule delays caused by the change. See Section 6.5 of the Contract for additional provisions regarding Design-Builder's changes in design.

18.4.5 Quality Control

Design-Builder shall provide QC/QA for all of the Utility Adjustment Work performed by Design-Builder in accordance with the QMP.

18.4.6 Construction Record

Design-Builder shall maintain a record of the Utility Adjustment Work and associated Design Work and Construction Work activities for the Utility facilities that have been performed by Design-Builder and that have been designed and Released-for-Construction after issuance of NTP2. Individual files shall include a record of the following information:

1. Design Documents for Utility Adjustment Work that have been reviewed by the Utility Owner and received review and written comment by the Department

2. Notification of construction dates

3. A record of meetings with the Utility Owner

4. A signature of the Utility Owner's representative on the Design Documents for Utility Adjustment Work

5. A record of the Utility Owner's representation at design and construction meetings

6. Any revisions to the Design Documents for Utility Adjustment Work

7. Dates of completed construction

8. All other as-built requirements stipulated in the applicable adjustment Standards

9. Design-Builder Utility Agreements

10. Two sets of the Record Drawings, as it pertains to Utility facilities, shall be provided to the Department along with a digital copy in a manner as set forth by the Department's GIS Division

18.4.7 Utility Damage Reports

Design-Builder shall be responsible for developing a "Utility Damage Report" form to use in the event a Utility is damaged. The form shall include sufficient information such as the location, date, time, Utility Owner, Utility locate details, the name of the Construction Manager and witnesses, a description of the damage, the signature of Design-Builder's superintendent, the time the Utility Owner was notified, and the contact person's name from the Utility. The form shall be submitted to the Department for review and comment before the start of Construction Work.

Design-Builder shall immediately report <u>any</u> damage to any Utility facilities to the Utility Owner and the Department, and fully cooperate with the Utility to ensure the facility's safe and timely

return to operation. Design-Builder shall complete and submit the Utility Damage Report form to the Department within 2 days of the damage.

18.4.8 Utility Adjustment Master Plan

The Department has provided Utility Information regarding the existing Utility facilities within the Reference Design that is included in the RIDs. The information is based on Utility Owners' record plans, field locations, and, in some instances, vertical elevation. Also provided are preliminary engineering plans per the Preliminary Utility Work Packages Within 30 days after the issuance of NTP1, Design-Builder shall submit an initial Utility Adjustment Master Plan to the Department for its records showing all known existing utilities and proposed Utility Adjustments. The Utility Adjustment Master Plan shall be a living document throughout the life of the Project; Design-Builder shall update it and submit it to the Department monthly to reflect all changed information then known to Design-Builder, and also shall distribute copies for discussion at scheduled Utility meetings. Updates shall be revised, date-stamped, and submitted to the Department for review and comment.

This page intentionally left blank.

19 INTELLIGENT TRANSPORTATION SYSTEMS (ITS)

19.1 General

This Section 19 specifies the requirements for the design, construction, installation, and testing of the ITS for the Project.

The Department currently operates an ITS system throughout the project area. Design-Builder shall upgrade the existing ITS capabilities for the Project limits, maintaining the same ITS capabilities that currently exist on the corridor, and including the addition of Active Traffic Management (ATM) functionality as defined in this Section 19. Required ITS elements include Dynamic Message Sign (DMS) units, flow detectors, CCTV cameras, ramp meters, count stations, fiber optic communications (including fiber plant and switching equipment), ITS cabinets, conduit, pull boxes, and power distribution. As described herein, Design-Builder shall deploy an ATM system on the freeway segments approaching the construction work area (the Construction ATM System) prior to the start of major freeway construction to be used in conjunction with and as part of the MOT for construction operations for the project.

The design and construction of all new ITS elements shall conform to the architecture requirements of FHWA Rule 940 *(23 CFR Parts 655 and 940, Intelligent Transportation System Architecture and Standards; Final Rule)*. Design-Builder shall identify any revisions required in the Nevada Statewide ITS Architecture and Southern Nevada Regional ITS Architecture for the implementation of the Project ITS, and shall provide updates to the architecture to the Department as required in Section 19.18.1. Design-Builder shall provide the ITS design in accordance with FHWA *Systems Engineering for Intelligent Transportation Systems: An Introduction for Transportation Professionals*[1].

There is existing fiber communications throughout the project area which carries live data communications for both the existing ITS within the project area and for equipment outside of the project area. Existing fiber communications and ITS functionality within the Project area (including video monitoring, traffic detection and dynamic message signs) shall remain available during construction. Temporary placement of signs, detectors, and cameras, as well as temporary power and telecommunications connections required to maintain ITS functionality, are acceptable during the Construction Period. Temporary wireless communications is acceptable except as a substitution for fiber trunk line communications. Any proposed disruption of existing fiber communications shall be coordinated with and approved by the Department. Existing and new ITS elements shall be maintained in accordance with the requirements of Section 19.3. No additional payments shall be shall be made for maintenance of ITS functionality.

Design-Builder shall provide a Construction ATM System which shall be available during construction of the Work to supplement the Design-Builder's MOT and shall include segments of the ATM system upstream from the Project's construction footprints as described in Section 19.5 (*Active Traffic Management*), plus any additional CCTV cameras necessary to meet the ATM monitoring requirements of Section 19.8.1 (*CCTV Location and Coverage Requirements*) for these segments of the ATM system. The ATM algorithms will make use of existing FAST detection apparatus for the Construction ATM System.

[1] http://ops.fhwa.dot.gov/publications/seitsguide/

All ITS Elements deployed by Design-Builder will be operated by the FAST Transportation Management Center (TMC). All ITS elements deployed by Design-Builder as part of the Construction ATM System shall be turned over to the Department upon Construction ATM System Acceptance and shall be warranted by Design-Builder for a period of two years from the date of Construction ATM System Acceptance in accordance with Section 11 of the Contract. Warranty information shall be included in the product data Submittal for new ITS elements.

The design and construction of all new ITS elements shall be compatible with the existing FAST systems and shall meet interface requirements allowing for expansion of the existing FAST systems using the correct revision of device firmware in use by FAST at the time of system acceptance. Unless otherwise specified herein or approved by the Department, all new ITS elements shall operate without requiring the installation of new device interface software in the existing FAST central software. New central software functionality required to implement ATM, which includes, but is not limited to, speed harmonization and dynamic lane control algorithms, will be procured by the Department under a separate contract with Kimley-Horn and Associates (see draft Service Agreement Number P298-14-015 included in the RIDs). All ITS elements mounted on the ATM gantries and flow detectors deployed by Design-Builder will be utilized by the central software provided under the Kimley-Horn and Associates' scope of work to implement the ATM functionality. The ATM central software will make use of the existing FAST device interfaces and new devices to receive traffic data from the detectors and to control the signs on the ATM gantries.

For all products (ITS field devices, civil infrastructure, and central hardware) and services (planning, design, integration, testing) furnished and installed by Design-Builder to satisfy the requirements in this Section 19, the Department requires that vendors providing devices and equipment utilized by Design-Builder shall have been in business for a minimum of 5 years, providing sales and service of the product type furnished within North America, and shall submit documentation demonstrating compliance with this requirement along with the product data Submittal for each ITS element.

19.2 Testing

Design-Builder shall demonstrate that the equipment and the ITS systems furnished and installed as part of the Work function in full compliance with the requirements of the Contract Documents.

Prior to any testing, Design-Builder shall submit for the Department's approval a Testing Program Plan that identifies all planned testing to be performed in compliance with the testing requirements of this Section 19. The Testing Program Plan shall include a planned testing schedule that accommodates the required tests, the test plan Submittal requirements, and the test sequencing requirements contained in this Section 19. For each test required in these technical provisions, the test shall be included in the testing schedule, and the Testing Program Plan shall include, as a minimum, the following sections:

- Anticipated duration of the test.
- Description of system to be tested in the test.
- List of Equipment to be tested by the test.
- Test objectives for the test.
- List of requirements for which compliance will be verified for the test.
- Preliminary Test Equipment List required for the test.

The planned testing schedule shall reflect Construction ATM System Acceptance prior to the start of long-term lane closures on the lanes they are intended to serve. If the ATM software modules are not available prior to the start of construction as described above, the ATM System Acceptance Test shall be scheduled to commence within 2 weeks after the ATM software modules are fully operational in the FAST system. All ITS testing, including Full ITS System Acceptance tests shall be completed prior to Substantial Completion. Submission of the Testing Program Plan shall not relieve Design-Builder of the testing notification requirements contained in this Section 19.2 (*Testing*).

19.2.1 Testing Stages

ITS Testing shall be conducted in five different stages of the system implementation:

- Factory Acceptance Test (FAT)
- Pre-Installation Test (PIT)
- Stand-Alone Test (SALT)
- Subsystem Test (SST)
- System Acceptance Test (SAT)

Not all stages of testing are required for every ITS element. The required test stages for each ITS element are described at the end of each subsection, where applicable, of this Section 19.

Factory Acceptance Testing shall verify that each unit of equipment operates as specified prior to shipping the device to the project site.

Pre-Installation Testing shall be conducted upon receipt of equipment at the site but before installation to verify the equipment operates correctly and to minimize removal and reinstallation of defective equipment, and to isolate any damage due to shipping.

Stand-Alone Testing shall verify that after installation but prior to interconnection to the communications system, the equipment operates as specified in the field under local control.

Subsystem Testing shall verify that units forming a subsystem continue to operate as specified when they are interconnected to and controlled from the hub.

System Acceptance Testing shall verify that all the subsystems operate as required from the FAST TMC and operate error-free for 60 days.

Testing for each stage shall be performed in the order listed herein. Testing at any stage shall not begin prior to approval of the test results from all prior stages of testing required for an ITS element. Approved test results for all required stages of testing for all ITS elements in the Construction ATM System including the Construction System Acceptance Test shall be required for Construction ATM System Acceptance. Approved test results for all required stages of testing for all ITS elements included in the project including the Full ITS System Acceptance Test shall be required for Full ITS System Acceptance.

19.2.2 Test Procedures, Software, and Data Forms

Design-Builder shall prepare test procedures, software (when needed) and data forms for all required FATs, PITs, SALTs, SSTs, and SATs. Design-Builder shall submit test procedures, software and data forms for approval at least 60 days before the scheduled testing. If approved,

tests may be conducted as scheduled. If rejected, Design-Builder shall reschedule the test if required to comply with Section 19.2.3 (*Test Scheduling and Witnesses*), revise the Submittal accordingly, and resubmit for another review. Design-Builder shall highlight the portions of the Submittal that have changed to aid in the re-review of the material.

As a minimum, test procedures and data forms shall include the following:

- Description of the equipment, subsystem, or systems to be tested.
- Description of the test configuration.
- Step-by-step outline of the test sequence to be followed, showing procedural test steps for every function of the equipment or system to be tested.
- Description of the expected operation, pass/fail criteria and test results.
- Test data form used to record all data and quantitative results obtained during the test.
- Description of any special equipment, setup, manpower, or conditions required for the test.

All test plan submittals for the first test stage after equipment installation shall include the installation, service or maintenance manual in conjunction with the test plans for all materials and equipment. If none exists, a letter from the equipment manufacturer on manufacturer letterhead is required indicating that no installation, service, or maintenance process is in place.

19.2.3 Test Scheduling and Witnesses

Design-Builder shall give notice of the time, date, and place of all tests at least 14 days prior to the date on which a test is planned. Tests shall not be scheduled sooner than 14 days after the associated test procedures are approved. If requested, Design-Builder shall postpone any test up to 7 days in order to accommodate the schedules of the Department representatives that will witness the test. The Department may waive the right to witness certain tests.

Neither the witnessing of tests, nor the waiving of the right to do so by the Department shall relieve Design-Builder of the responsibility to furnish and install the Work in accordance with the Contract Documents. Such actions by the Department or approval of any test results by the Department shall not be deemed as acceptance of the equipment or systems tested until successful completion of the SAT.

Design-Builder shall ensure that all equipment to be tested is ready for testing prior to the performance of and the Department's witnessing of the tests.

19.2.4 Test Results Submission and Acceptance

Design-Builder shall complete and submit approved test data forms within 3 days of test completion containing all of the data taken as well as quantitative results for each test for approval. The test data forms shall be the basis for rejection or acceptance of the required test by the Department. Design-Builder shall have an authorized representative sign all test data forms. When tests are witnessed by the Department, Design-Builder shall obtain the witnessing Department representative's signature on the test data form. This signature does not indicate that the test was passed, only that it was witnessed.

Failure of any item to meet the requirements for any test shall be counted as a defect and the equipment under test shall be subject to rejection by the Department. If re-used, rejected equipment shall be retested after all areas of noncompliance have been corrected and evidence thereof is submitted.

For equipment that has failed and has subsequently been repaired or modified, Design-Builder shall prepare and deliver a report that describes the nature of the failure and the corrective action taken. Design-Builder shall submit this report for approval prior to shipping the modified equipment. After a maximum of three failing tests, Design-Builder shall remove and replace the faulty equipment and schedule re-testing in accordance with Section 19.2.3 (*Test Scheduling and Witnesses*).

19.2.5 Factory Acceptance Test

Design-Builder shall conduct approved FATs at the equipment factory on each unit of equipment to verify proper operation of all required functions. Design-Builder shall conduct testing to verify that the equipment operates correctly after fabrication but before shipping. Design-Builder shall work with the equipment vendor and conduct and report approved FATs (non-network) on each unit of equipment after fabrication. Design-Builder shall furnish for advance approval all necessary procedures, documentation for test equipment and test software, and test forms as required in Section 19.2.2 (*Test Procedures, Software, and Data Forms*). If a FAT is witnessed by the Department, Design-Builder shall bear all travel costs for up to two Department personnel to the location of the testing.

19.2.6 Pre-Installation Test

Design-Builder shall conduct approved PITs upon receipt of equipment but before installation to verify the equipment operates correctly and to minimize removal and reinstallation of defective equipment. PITs shall be conducted on all fiber optic cable on the reel to verify cable was not damaged during shipment. Design-Builder shall furnish for advance approval all necessary procedures, documentation for test equipment and test software, and test forms as required in Section 19.2.2 (*Test Procedures, Software, and Data Forms*).

19.2.7 Stand-Alone Test

Design-Builder shall conduct approved SALTs on each unit of equipment after installation in the field to verify that the equipment operates correctly after installation but before interconnection with communications equipment. Design-Builder shall furnish for advance approval all necessary procedures, documentation for test equipment and test software, and test forms as required in Section 19.2.2 (*Test Procedures, Software, and Data Forms*). If necessary for access to installed equipment for testing, Design-Builder shall conform to the requirements in Section 12 (*Maintenance of Traffic*) for MOT and comply with related schedule restrictions. Design-Builder shall supply a bucket truck (and operator if needed) as required. Power Distribution Testing, as specified in Section 19.17.4 (*Power Distribution Testing*) shall be completed prior to commencement of SALT at any given site.

19.2.8 Subsystem Test

Design-Builder shall conduct approved SSTs for the field equipment and related equipment at the FAST hub (formerly Las Vegas Area Computer Traffic System [LVACTS] hub). All equipment utilized for an SST shall have successfully completed a SALT with accepted test results. The SST

for any ITS element shall include all the associated field equipment for that element plus the communications related elements that connect the ITS element under test to the hub. Any new hub communications equipment shall have successfully completed the SST for that equipment prior to commencement of the SST for any connected ITS element. Design-Builder shall furnish for advance approval all necessary procedures, documentation for test equipment and test software, and test forms as required in Section 19.2.2 (*Test Procedures, Software, and Data Forms*).

The SST shall use field device communication protocols provided by the Department or FAST. If modifications to the device communications software are required to conduct the SST from the hub, Design-Builder shall modify the device communication software as needed. Design-Builder shall give 3 days notification prior to starting any test software modifications if any are needed. At that time the Department will verify the veracity of all previously published communication protocol and format documentation (and submit modifications, if any). The Department will not be responsible for any costs arising from protocol changes that occur prior to the notification described above.

The SST shall be performed using Design-Builder-furnished computer equipment. Design-Builder shall provide additional test equipment as necessary to conduct the SST. As part of this testing, the test shall periodically poll all devices that support status polling per the Department approved field device communication protocols.

SSTs shall not be considered successful until all equipment being tested is operational without failure for 72 consecutive hours.

19.2.9 System Acceptance Test

The System Acceptance Test shall be performed for all subsystems (CCTV cameras, DMS, ramp meters, etc.) concurrently. Design-Builder shall conduct approved SATs and exercise the system equipment on a daily basis, including controlling the cameras, switching video, uploading detector data, operating ramp meters, and displaying test messages/symbols on the DMS signs both manually and by the ATM software. Design-Builder shall obtain access to the FAST Traffic Management Center (TMC) during normal working hours to conduct this test. Design-Builder shall furnish for advance approval all necessary procedures, documentation for test equipment and test software, and test forms as required in Section 19.2.2 (*Test Procedures, Software, and Data Forms*).

Design-Builder shall conduct 2 separate SATs, the Construction ATM System Acceptance Test for the Construction ATM System as specified in Section 19.1 (*General*) and the Full ITS System Acceptance Test for all ITS elements included in the project with the exception of the Construction ATM System equipment already turned over to the Department.

Design-Builder shall conduct the SAT only after all subsystem testing has been successfully completed and accepted.

The SAT shall be conducted using the FAST Central System Software. This software shall be loaded on a Design-Builder-furnished computer or a FAST-provided workstation, as directed by the Department. The SAT shall consist of a 60-day period of operation without major failure (as defined below) of Design-Builder-supplied equipment and shall demonstrate that the total system (hardware, firmware, materials, and construction) is properly installed, is free from identified

problems, exhibits stable and reliable performance, and complies with all requirements of the Contract Documents.

As part of the SAT, the Design-Builder will provide unrestricted device use by the Department/FAST during the SAT, and such use does not constitute device or system acceptance or transfer of ownership. The Department/FAST may at their discretion post messages on DMSs for public use, collect and use detector information and operate the CCTVs for monitoring purposes as well as operate the ramp meters and the ATM system. Design-Builder shall coordinate all SATs activities with the Department/FAST operations staff.

Design-Builder shall ensure that all equipment is maintained in operable condition during the SAT, and shall troubleshoot, diagnose, identify, isolate, and resolve all hardware and firmware problems and inconsistencies. Design-Builder shall formulate possible solutions and implement all corrections needed for Design-Builder-installed equipment. Design-Builder shall identify any problems in equipment furnished by the Department and/or others and assist the Department in correcting problems with such equipment.

Design-Builder shall have the ITS System Engineer (as required in Section 19.4 [*System Integrator*]) onsite to operate the system, exercising all functions, as described. Additionally, Design-Builder shall make available onsite key technical personnel familiar with the design and construction of each major system component within 48 hours of notification of a problem.

Design-Builder shall correct all system documentation errors, omissions, and changes discovered as a result of the SAT and previous testing. System acceptance shall not be complete until corrected documentation is submitted.

In the event of a failure of a single piece of equipment during the SAT, Design-Builder shall replace or repair the equipment and restart the 60-day test only for that piece of equipment. If the failure of the single piece of equipment prevents the proper operation of other equipment (e.g., failure of the CCTV terminal server prevents CCTV control for several cameras), all devices affected by the failure shall have the test extended by the number of days they were out of service, whether or not these devices have previously been tested and passed before equipment failure occurred.

The following conditions constitute a minor system failure and shall result in suspension of the 60-day test:

- Interference with project operations due to power failure.
- Failure to complete the objective of any test scenario due to lack of adequate documentation for equipment supplied by the Design-Builder. Retest using revised documentation.
- After satisfactory remedial action, the 60-day test shall be resumed and extended one day for each restart.

The following shall constitute a major system failure. Any one of the following conditions shall result in re-initialization of the SAT from day zero:

- Failure of any hardware or performance item to meet the operational requirements for 72 consecutive hours.

- Failure of 5 percent of all field devices or communication equipment within a 14-day period.
- Intermittent hardware, software, communication, or operation control malfunctions.

The SAT shall include use of the Department's Central System Software and/or simulation software furnished by the Department/FAST to perform, at a minimum, for the following functions:

- Send command messages to Model 170E controllers at the regular specified intervals.
- Read responses of Model 170E controllers and flag communication errors, loop or VID errors and compare them to the pass/fail criteria.
- Send flow detector commands to and receive data from flow detectors, verify accuracy of data at central.
- Send camera control commands to and receive responses from the CCTV cameras.
- Send video routing commands to and receive responses from the device to verify proper routing of video communications.
- Send command messages to and receive responses from the DMS to verify proper operation and communication with the signs.
- Send information back and forth among all interconnected central TMC computers on the Local Area Network (LAN).

If necessary, Design-Builder shall update the simulation software furnished by the Department/FAST software as required to accomplish the functions described above.

19.3 Maintenance of ITS

Design-Builder shall take all necessary actions to ensure that existing ITS functionality is maintained throughout project construction, that every element of the Construction ATM system is in a condition that meets or exceeds the Performance Requirements throughout project construction, and that every element of the ITS is in a condition that meets or exceeds the Performance Requirements at Substantial Completion and during the Warranty period as set forth in Table 19-1. The Design-Builder shall maintain a quantity of Spare Parts sufficient to meet the Maintenance Requirements of this Section.

Design-Builder shall maintain a 24 hour per day, 7 days per week local voice telephone number and e-mail address for the duration of the contract and Warranty period. Design-Builder will be notified of system failures by both voice telephone and e-mail. Design-Builder shall respond to equipment failure service calls within the time limits identified as follows:

- Upon notification of a system failure by a Department or FAST representative to the Design-Builder via the twenty-four (24) hour emergency telephone number, and by e-mail, Design-Builder shall dispatch service personnel who shall arrive at the required location(s) after notification within the response time identified in Table 19-1. The start clock for response time shall be determined by the sent time of the notification e-mail.
- Design-Builder shall complete all necessary work to correct the problem and bring equipment within the target performance requirements of Table 19-1 in the timeframes specified below, unless additional time is allowed by the Department.

- Within 24 hour of arrival at the site for FAST fiber optic trunk cable
- Within 48 hours of arrival at the site for any branch FAST cable
- Within 4 hours of arrival at the site for all other equipment failures that do not involve structural damage to the cabinet or equipment mounting structure.
- Within 72 hours for equipment failures due to structural damage to cabinets or equipment mounting structures.

Failure to meet response and repair times will result in the assessment of liquidated damages as defined in Section 17.4, unless an extension of time is granted by the Department due to unusual extenuating circumstances. Unavailability of spare parts to effect necessary repairs shall not relieve the Design-Builder of the repair time requirement unless the Design Builder can document the use and exhaustion of a reasonable quantity of spare parts and a backorder of replacement spares ordered within 5 days of the first use of the spares of the same model or equivalent. 10 percent of the installed quantity of each part covered under this maintenance program, but no less than 2 spares of each part shall be deemed to be a reasonable quantity of spares.

Design-Builder shall notify the Department immediately by telephone upon arrival at the required location, and Design-Builder shall notify the Department immediately upon completion of the work operation before departure from the site. This notification procedure shall be followed for each work site the Design-Builder is dispatched to. Failure to provide the required notifications will be grounds for the Department to determine Design-Builder has not met the response and repair time requirements.

Design-Builder shall provide a written failure report to the Department within 24 hours after completion of all necessary repairs of the problem. The written failure report shall fully describe the problem, its cause, and all action taken and equipment utilized in the repair. All equipment, materials, or software listed in the report shall contain the manufacturer's name, model, and serial number. All equipment or components used in the replacement or repair shall be those that have previously been approved by the Department. Design-Builder shall not perform field repairs on electrical or electronic equipment. Malfunctioning electrical or electronic equipment shall be replaced by those components that have previously been approved by the Department. Failure of the Design-Builder to provide the Department with the written failure report or failure to meet the repair timelines may be means for the State to assess liquidated damages.

If, once at the site, Design-Builder determines that the failure is due to an unpredictable external force acting on the field equipment or any appurtenances, such external forces being only vandalism, non-Design-Builder owned vehicle impact, gunfire, brushfire, abnormal weather being a National Weather Service verified tornado or hurricane (Poles and all field equipment shall be constructed to withstand normal weather including lightning, extreme heat and cold, and high winds), verifiable power failure in the area, or failure of the cable company or telephone company to provide communications, Design-Builder shall notify the Department immediately and submit by e-mail a time and cost estimate for the repair based upon agreed unit prices to be established. Design-Builder shall submit the estimate within twenty-four hours of the call. Design-Builder shall perform the repair according to the agreed upon terms, upon his receipt of written authorization to perform the work from the Department.

Table 19-1 ITS Maintenance Performance Requirements

Element	General Requirement	Response to Defects Time		Maintenance Performance Requirements	
		Cat 1 Immediate Action upon notification	Cat. 2 Permanent Repair	Measurement Criteria*	Target*
Intelligent Transportation System (ITS)	The ITS as a system as a whole in the Project Neon interchange shall be maintained as available for operation 24 hours a day, 365 days a year.	Within 2 hrs of notification	N/A	System availability shall be measured for each ITS subsystem installed by Design-Builder. System availability shall be computed as $$A_S = \frac{TSDT}{N_D * 365 * 24}$$ Where: TSDT = the accumulated total subsystem down time during the calendar year for all devices ITS field devices in the subsystem installed by the Design-Builder N_D = the total number of devices in the subsystem. Any portion of an hour of downtime shall be rounded up to the next whole hour. Scheduled downtime for preventative maintenance shall not count as downtime for system availability. - Preventative maintenance shall only be scheduled between 11 pm and 4 am. Scheduled downtime between 8 pm and 6 am to switch equipment to or from temporary equipment during construction shall not count as downtime for system availability.	System Availability of every subsystem shall be greater than 99.72%.

Table 19-1 ITS Maintenance Performance Requirements

Element	General Requirement	Response to Defects Time		Maintenance Performance Requirements	
		Cat 1 Immediate Action upon notification	Cat. 2 Permanent Repair	Measurement Criteria*	Target*
Dynamic Message Sign (DMSs) Pixels	All pixels shall be fully functional. Modules with any failed, damaged, or degraded pixels must be replaced regardless of the cause of failure. Any failed pixels or modules impacting the appearance of any messages on the sign within 1,000 feet must be expedited.	2 hrs	N/A	Text messages shall remain readable as required in Section 19 of the Technical Provisions. Full matrix test patterns of single colors shall display uniform color across the entire sign.	Test displays shall meet the measurement criteria when viewed from any location within 1,000 feet of the sign and within the specified field of view for the sign.
Dynamic Message Sign (DMSs) Function	DMS shall be able to display an entire message commanded from FAST TMC software and/or operators.	2 hrs	N/A	The DMS shall display any message commanded by software and/or FAST TMC operators with no delays after remote activation. FAST TMC operators shall be able to receive accurate sign status for the DMS controller.	The DMS display updates with commanded message within 5 seconds of the operator issuing a display update request from the FAST TMC system. Current sign status is accurately displayed in the FAST TMC system when the operator displays the sign status in the system.
Dynamic Message Sign (DMSs) Dimming Failure	Full Color/Full Matrix automated displays dimming function shall remain operational at all times, as failure of this system will result in a safety issue at night. Blocked or damaged photocells must be cleaned or replaced.	2 hrs	N/A	The DMS intensity allows messages to be read but are not so bright at night as to interfere with driver's vision.	The DMS message is viewable as specified in Section 19 of the Technical Provisions any time day or night without interfering with driver's vision.

Table 19-1 ITS Maintenance Performance Requirements

Element	General Requirement	Response to Defects Time		Maintenance Performance Requirements	
		Cat 1 Immediate Action upon notification	Cat. 2 Permanent Repair	Measurement Criteria*	Target*
Dynamic Message Sign (DMSs) Security Breach (Any)	DMS shall display only messages placed by the FAST TMC software. If messages are displayed that are not from the FAST TMC software as the result of a security breach, or is suspected to be the work of a vandal, hacker, typo error, disgruntled employee, etc., Design-Builder shall take action to notify FAST TMC and if necessary shut down the sign and investigate the cause of the errant message.	2 hrs	N/A	Visual verification that the message displayed on the DMS is not a message commanded by the FAST TMC software, and/or there is a reasonable conclusion based on message content that it is not a message NDOT would want displayed on the sign (e.g., other than traffic- and safety-related messages).	Identify any DMS message displayed that was not commanded by the FAST TMC software.
Dynamic Message Sign (DMS) Preventative Maintenance	Design-Builder shall perform preventative maintenance on the DMS in accordance with the manufacturer's recommendations.	N/A	Dev. Scheduled	Perform regular periodic preventative maintenance.	As recommended by the manufacturer and FAST TMC ITS policies and practices; no less frequently than annually.
Flow Detector System Operation	Flow Detector System shall continually provide accurate and reliable data from all lanes where detection is applied, without full, partial, frequent, or intermittent failure.	1 hr	N/A	Volume, speed, and occupancy data is reported in real time to the FAST TMC system.	Continual transfer of real-time data.

Table 19-1 ITS Maintenance Performance Requirements

Element	General Requirement	Response to Defects Time		Maintenance Performance Requirements	
		Cat 1 Immediate Action upon notification	Cat. 2 Permanent Repair	Measurement Criteria*	Target*
Flow Detector System Data Accuracy	The accuracy of the reported data from the detector shall remain within the specified accuracy requirements of Section 19 of the Technical Provisions. Flow Detector System shall be recalibrated or replaced to correct data accuracy issues, as needed.	2 hrs		Detector data transmitted to the FAST TMC system is consistent with adjacent detector data and historical data for the time of day. If data does not appear consistent, Design-Builder shall field verify detector data against manual counts and speed measurements according to manufacturers' calibration procedures.	Data accuracy meets Section 19 Technical Provision requirements
Flow Detector System Preventative Maintenance	Design-Builder shall perform preventative maintenance on the Flow Detector System in accordance with the manufacturer's recommendations.	N/A	Dev. Scheduled	Perform regular periodic preventative maintenance including recalibration.	As recommended by the manufacturer and FAST TMC ITS policies and practices; no less frequently than annually.
Ramp Meter Operation	All Ramp Meter components must continually function without full, partial, frequent, or intermittent failure. Ramp-metering system shall function according to pre-set algorithm and conditions. It must be controllable by FAST all the times.	1 hr	N/A	Ramp Meters lights and functions should be operational when commanded by FAST TMC system.	No failure of ramp metering or associated traffic signals
Ramp Meter Displays	Bulb outages in ramp meter signal heads or warning devices must be repaired, and the meter should be shut down until such repairs are complete. This includes physical damage, degradation, and poor visibility due to any cause, including misalignment of heads, bulbs,	2 hrs	N/A	Displays must be clearly visible to the intended motorists for the intended purposes of safe traffic control while the meter is operational.	Ramp meters will be shut down in the case of degradation of visible displays until repairs are promptly made.

Table 19-1 ITS Maintenance Performance Requirements

Element	General Requirement	Response to Defects Time		Maintenance Performance Requirements	
		Cat 1 Immediate Action upon notification	Cat. 2 Permanent Repair	Measurement Criteria*	Target*
	warning devices, and pavement markings.				
Ramp Meter Detection	Passage, presence, and queuing detection must be fully and properly operating during ramp meter operations.	2 hrs	N/A	Signals shall turn green once the metering interval has expired when the presence detector is activated. Signals shall then turn red upon detection of the passing vehicle. Meter violations must be detected, reported and the equipment must reset properly after a violation.	Ramp meters will be shut down in the case of degradation of detection until repairs are promptly made.
Ramp Meter Preventative Maintenance	Design-Builder shall perform preventative maintenance on the Ramp Meters in accordance with the manufacturer's recommendations for the associate traffic controller and signals. Preventative maintenance shall include inspection of proper operation of displays and stop bar pavement markings. Determine proper operation of detection to trigger meter operation. Witness proper start-up and operation of the meter at the beginning and end of time-of-day cycles.	N/A	Dev. Scheduled	Perform regular periodic preventative maintenance.	As recommended by the manufacturer and FAST TMC ITS policies and practices; no less frequently than annually.

Table 19-1 ITS Maintenance Performance Requirements

Element	General Requirement	Response to Defects Time		Maintenance Performance Requirements	
		Cat 1 Immediate Action upon notification	Cat. 2 Permanent Repair	Measurement Criteria*	Target*
Closed-Circuit Television (CCTV) Cameras Operation	All CCTV cameras must be available to perform their intended functions and provide continuous feed. CCTV cameras must remain operational all the time. All specified functions must be available all the time within the performance specifications for the equipment.	2 hrs	N/A	View received video feeds on monitors at FAST TMC. Control camera pan, tilt, and zoom functions.	PTZ control is reflected in the received video within 1 second of initiation of the command.
Closed-Circuit Television (CCTV) Cameras Video Image Quality	Digital image quality shall be maintained from all CCTV streams. Minimal vibration, color balance, clarity, and adaptive luminosity for outdoor conditions shall be maintained. Any lens obstruction or degradation in the field (i.e., nesting birds, spiders, foliage growth, dust accumulation, etc.) shall be promptly removed. Any degradation, obstruction, vibration, dimming, blocking, blurring, etc. shall be treated as a CCTV failure and corrected.	2 hrs		View received video from monitors at FAST TMC	Video resolution is consistent with the capabilities of the camera and video encoder. Image remains focused at all zoom levels, and image brightness adjusts automatically to changing light conditions. Quality of CCTV images of cameras shall blend in and perform consistently with other properly functioning FAST TMC video images, so that when viewing images from inside the FAST TMC operations room, the camera image appearance is consistent and conforming to adjacent displays.
Closed-Circuit Television (CCTV) Cameras Preventative Maintenance	Design-Builder shall perform preventative maintenance on the CCTV in accordance with the manufacturer's recommendations.	N/A	Dev. Scheduled	Perform regular periodic preventative maintenance.	As recommended by the manufacturer and FAST TMC ITS policies and practices; no less frequently than annually.

Table 19-1 ITS Maintenance Performance Requirements

Element	General Requirement	Response to Defects Time		Maintenance Performance Requirements	
		Cat 1 Immediate Action upon notification	Cat. 2 Permanent Repair	Measurement Criteria*	Target*
FO Cable (backbone)	FO cables shall remain operational all the time. Cables with visible damage due to any cause (e.g., rodent), degradation, excessive bending or pulling shall be investigated for degraded operation. Downtime for splicing and repair shall be strictly minimized in accordance with FAST TMC policies and practices.	2 hrs	N/A	Cables exhibiting high bit error rates or loss of communications shall be OTDR tested and approved by FAST.	Attenuation shall be as specified in Section 19 of the Technical Provisions.
FO jumper cable (pigtails), splice closures, termination units, and related equipment	All FO jumper cables, splice enclosure, termination units and related must perform their intended communication functions and without failure.	2 hrs	N/A	Jumper cables and connectors exhibiting high bit error rates shall be inspected and OTDR tested. Splice closure, termination units and related equipment shall be inspected.	No damage or contamination. Splice closures remain sealed. Attenuation shall be as specified in Section 19 of the Technical Provisions.
Field Hardened Ethernet Switch, modems, and related hardware	All switches, modems, and related hardware shall remain fully operational all the time.	2 hrs	N/A	Verify data transfers and error rate in communications logs	Error-free and reliable communications.
ITS cabinets	ITS cabinets shall be secured and provide housing for communications hardware and cabling. Locks, ventilation fans, and lights must remain functional.	2 hrs	N/A	Physical inspection of cabinet and equipment.	No damage to cabinet, mounting, or hardware. Locks and hinges operate smoothly. Lights and fans operate without excessive noise. Surge protectors are operational and without damage. Cabinet is clean, dry, and free of any foreign materials not associated with ITS (e.g., insects/nests).

Table 19-1 ITS Maintenance Performance Requirements

Element	General Requirement	Response to Defects Time		Maintenance Performance Requirements	
		Cat 1 Immediate Action upon notification	Cat. 2 Permanent Repair	Measurement Criteria*	Target*
ITS Cabinet Preventative Maintenance	Design-Builder shall perform preventative maintenance on the ITS Cabinets in accordance with the manufacturer's recommendations, including filter changes.	N/A	Dev. Scheduled	Perform regular periodic preventative maintenance.	As recommended by the manufacturer, FAST TMC ITS policies and practices, no less frequently than annually.
Devices Firmware	All devices firmware shall be updated at Design-Builder's expense to ensure compatibility with other hardware. All devices shall be able to perform intended functions.	24 hrs	N/A	Check device firmware version and compare against version of latest release of firmware compatible with FAST TMC system. Design-Builder is responsible for cost of firmware upgrade.	Latest release of FAST TMC-compatible firmware installed in all ITS devices.
Power distribution System	Safe power supply shall be available at rated value to accommodate the need of all the connected hardware. Components with battery backup shall be functional when needed.	2 hrs		Measure available voltage at field equipment distribution panels and at the equipment. Inspect all circuit breakers, disconnect switches, cables, and wires for damage and signs of arcing.	Voltages are within ±5% of rated service voltage. No signs of physical damage or arcing.
Conduits, Pull Boxes, Grounding	All grounding circuit must provide intended rated protection all the time.	24 hrs	N/A	Physical inspection of conduits, pull boxes, and ground connections and cables. Test resistance to ground with calibrated ground test meter.	No signs of damage or excessive wear, as determined by NDOT inspection, on pull boxes, conduit, or cables. No standing water in pull boxes. No corrosive build up on ground wires or connections, or lose ground connections. Resistance to ground no greater than requirements of Section 19 of the Technical Provisions.

Table 19-1 ITS Maintenance Performance Requirements

Element	General Requirement	Response to Defects Time		Maintenance Performance Requirements	
		Cat 1 Immediate Action upon notification	Cat. 2 Permanent Repair	Measurement Criteria*	Target*
All visible devices and displays	All ITS devices, supports and displays visible to the public, including CCTV cameras, cabinets and DMSs, are subject to occasional vandalism and theft. Devices, displays, supports, and cabinets that are damaged, defaced, penetrated (e.g., gunshot), or subject to intentional acts of vandalism or theft shall be repaired, cleaned, or replaced and returned to operational status and acceptable appearance.	48 hrs		Inspection for any damage or defacing	Undamaged ITS equipment, supports and displays with clean appearance.

Design-Builder shall submit a maintenance plan no later than 45 days prior to commencement of acceptance testing for the Construction ATM system for review and approval by the Department. The maintenance plan shall document Design-Builder's maintenance program, including at a minimum:

- Contact numbers and e-mail addresses for maintenance notifications
- Design-Builder staff and contacts responsible for oversight of the maintenance program
- Quantities and location of spare inventory
- Design-Builder procedures for emergency maintenance response and documentation
- Design-Builder procedures and schedules for preventative maintenance activities
- Sample forms to be used for maintenance documentation.

19.4 System Integrator

Design-Builder shall utilize a qualified firm as a System Integrator at the Project Site. The System Integrator shall be responsible for the design of the ITS systems and the installation, configuration and testing of the ITS systems during construction. All work shall be completed consistent with referenced industry standards, Technical Provisions for this Project, and the Department's Standard Specifications. All ITS Design plans shall be stamped by a Registered Professional Engineer. The System Integrator shall update the FAST Basis of Design Document to reflect the ITS system design by Design-Builder.

Design-Builder shall provide a statement of qualifications for the System Integrator firm in accordance with this Section 19.4. System Integrator staff shall include a Systems Integrator Manager and ITS Systems Engineer meeting the qualifications required in Section 1.6.4 (*Lead Personnel Qualifications*). The ITS Systems Engineer on the project shall oversee the design and integration of the ITS systems. The roles and responsibilities of the lead personnel shall be included with the statement of qualifications for the System Integrator firm. The System Integrator shall have the following minimum qualifications:

- System Integrator staff shall meet the requirements for the necessary skill levels as defined in Section 19 of the NDOT Information Technology General Specifications for Telecommunication Installation, Project Reporting, and Technical Qualifications.
- Firms shall be able to demonstrate competency in the installation, configuration and testing of ITS devices and subsystems including, ATM, CCTV cameras, DMSs, flow detectors, ramp meters, electrical power systems, and wireline and wireless communications technologies.
- Further competency in the configuration, testing, and troubleshooting of device and field processor software shall be demonstrated.
- System Integration personnel shall have an understanding of the day-to-day operations of the ITS systems to be deployed on the Project to further ensure that the delivered system is meeting the needs of the end user. System Integrator personnel shall also possess qualifications and certification in all the areas of expertise for the ITS systems required for the Project. Typical qualifications/certifications may include electrical journeyman, network communications, fiber optic cable testing and splicing, and certification by equipment manufacturers.

- The System Integrator must demonstrate the ability to understand the Department's ITS project documents and deliver a complete and functional system that meets the requirements set forth for the Project.
- System Integrator shall demonstrate a least 5 years of experience in the design, construction, and integration of every ITS system required for the Project following the FHWA mandated systems engineering process.
- System Integrator shall be a Nevada Licensed Contractor.

19.5 Active Traffic Management

Design-Builder shall provide ATM for Project roadways at the locations specified in Section 19.5.2 (*Gantry Locations*). Design-Builder's ATM design shall support the following basic ATM operational strategies implemented in the FAST ATM software with related devices:

- Speed Harmonization: Variable speed displays are set (and varied) according to speed measurements at successive locations on the highway. As speed falls at a detector station, the speed limits upstream are lowered until the speed at the problem location improves. All Project ATM displays are to be regulatory (enforceable). Extensive instrumentation of the roadway (vehicle detectors) is required to capture the real-time data needed for speed harmonization algorithms to function properly. Design-Builder shall use full-color/full-matrix lane specific DMSs for speed displays on the Project.
- Queue Warning: Queue warning involves the use of warning displays to alert motorists of downstream queues. Design-Builder shall use the same DMSs for speed harmonization and for queue warning. Extensive instrumentation of the roadway (detectors and full video coverage) is required to capture the real-time data and images needed for queue warning strategies.
- Dynamic Lane Merging: This application uses variable traffic signs and lane use control to direct traffic to specific lanes (mainline or ramp) based on varying traffic demand. This is focused at merges from major interchange ramps. Benefit is to effectively utilize available roadway capacity and manage traffic flows to reduce congestion and crashes.
- Dynamic Ramp Metering: This application uses ramp meters and mainline detection occurring on freeway to turn on ramp meters during congestion or turn off ramp meters in times of no congestion. Benefits include improving public perception of effectiveness of ramp metering strategy and utilizing ramp meters in their intended purpose which is to meter traffic in real-time, onto freeway during congestion periods.

The design of ATM for the Project shall follow the FHWA's Systems Engineering Process for ITS projects. The ATM Concept of Operations document describes how the ATM system is to operate and how the system will meet the needs and expectations for Project stakeholders. The draft ATM Concept of Operations is included in the Reference Information Documents. The final ATM Concept of Operations will be provided to Design-Builder upon completion.

19.5.1 Dynamic Message Sign for ATM

The ATM system shall use full color/full matrix dynamic signage to display the variable speed limits/advisories, to warn and advise motorists (e.g., the reasons for the decrease in posted speeds), and to display which lanes are opened or closed and the transition from open to closed.

The DMS placement shall conform to the MUTCD requirements for sign placement, including giving adequate time for proper response.

19.5.2 ATM Systems

Each ATM location on the roadway shall include one of three types of gantries (as described in Section 19.5.4 (*Types of Gantries*) as well as vehicle detection that produces lane-specific speed and volume data, and power and communications appurtenances. Vehicle detection locations shall not exceed 0.33-mile spacing to match the FAST legacy detection apparatus. Design-Builder shall show how the detector scheme correlates with the gantry placement. Each gantry will have at least one detector station associated with it in software, but there may be more than one detector station between gantry locations.

19.5.2.1 Construction ATM System

Design-Builder shall design and construct a Construction ATM System to provide management of traffic approaching the I-15 and US 95/I-515 freeway system Work described in Section 1.1.4.1 (*Department's Project Infrastructure Limits*). The Construction ATM System shall include at least three gantries and supporting infrastructure approaching the US 95/I-515 freeway system Work in each direction on US 95/I-515, and at least three gantries and supporting infrastructure approaching the I-15 freeway system Work in each direction on I-15. Construction ATM System gantry placement and spacing shall be in accordance with the requirements of Section 19.5.3 (*Gantry Placement Criteria*).

The Department's objective is for the Construction ATM System to be installed and operational prior to disrupting traffic for freeway system construction. To provide the Department with its best opportunity to meet its goal of having the Construction ATM System operational prior to Design-Builder implementing any Permitted Construction Closures, Design-Builder shall accelerate Construction ATM System layout, design, procurement, fabrication and installation in accordance with Section 19.18.1 (*Early Construction ATM Submittals*).

The Construction ATM System shall connect to existing NDOT/FAST fiber optic communications infrastructure adjacent to the roadway. The Construction ATM System approaching the roadway construction area shall be used as a traffic management tool. Design-Builder shall incorporate the use of the ATM for traffic management during construction as a supplement to the MOT Plans (see Section 12.4.7 [*Advanced Traffic Management System*]). The Construction ATM System shall be turned over to the Department for operations and maintenance upon Construction ATM System Acceptance.

19.5.2.2 Full ATM System

When completed, the full ATM System will provide continuous ATM gantries in both directions from Warm Springs Road to the northernmost limit of the Construction ATM System on I-15, and from the westernmost limit to the easternmost limit of the Construction ATM System on US 95.

ATM gantries not included in the Construction ATM System do not have to be fully operational until subsystem testing for the Full ATM System.

19.5.3 Gantry Placement Criteria

Design-Builder shall incorporate at least the following 14 design criteria to determine the preliminary ATM gantry locations:

1. Gantries shall be spaced at a maximum of 0.5-mile.

2. Gantry location shall provide 1,000 feet of clear visibility for each ATM gantry.

3. Gantry locations shall be such that the next downstream gantry is visible for a motorist passing anywhere underneath an upstream gantry.

4. Gantries shall not be mounted on existing or new bridge structures. Gantry structures shall straddle the road where required at bridge or viaduct locations.

5. Project design shall provide variable speed limit notice sign for vehicles at each entrance ramp.

6. Project design shall provide current variable speed limit for each entrance ramp within 0.5-mile of the gore.

7. Project design shall remove fixed roadside static speed limit signs from the ATM section (ATM will run 24 hours a day, 7 days a week, 365 days a year).

8. Gantry locations shall optimize visibility and minimize overall ATM cost by placing the sign at the end of a straight roadway section before a horizontal curve.

9. Gantry locations shall optimize visibility and minimize overall ATM cost by placing the sign at the end of a straight roadway section at the peak of a vertical curve.

10. Where possible, Design-Builder shall coordinate gantry locations with fixed signage and eliminate conflicting or redundant static signage.

11. Design-Builder shall reposition, relocate, or combine ATM with existing or planned DMS.

12. As necessary, Design-Builder shall remove existing legacy DMSs and install new Type ATM-1 DMSs placed on ATM gantries.

13. Where possible, Design-Builder shall combine adjacent (northbound/southbound and eastbound/westbound) ATM locations.

14. Where possible, Design-Builder shall coordinate ATM locations with existing legacy cabinets, power, and communications and detection stations.

Design-Builder's Final Design shall locate ATM gantries plus or minus 100 feet from their preliminary design locations, based on field conditions, to allow flexibility in their placement to account for civil design needs, adjacent signage, power availability, Project ROW, and other constraints.

19.5.4 Types of Gantries

Design-Builder shall choose from three types of gantries in the ATM design. The gantries provide differing levels of functionality and cost, and shall be selected based on the specific requirements of each location. The following sketches of the sign layouts for the different gantry types are for illustrative purposes. The Principles of CSS shall apply to the gantry design, and an aesthetically pleasing solution is required. The appearance of all gantry structures shall be consistent across all gantry types used. Design-Builder shall select one of the following gantry structures for all of the three gantry types:

1. NDOT standard truss structure
2. Monotube Structure

Gantry Types 1 and 2 are generally expected to be used in alternating locations, with Gantry Type 1 typically occurring at a section entry or immediately downstream of an interchange entrance ramp. Gantry Type 1 shall not be used adjacent to another Gantry Type 1; however, Gantry Type 2 may be used adjacent to another Gantry Type 2.

Gantry Type 3 is proposed as an alternative in densely signed segments where sign spacing is an issue. Use of Gantry Type 3 will be limited and will be subject to approval by FHWA and the Department on a case-by-case basis.

To allow for future configuration changes in the roadway and gantry utilization on the corridor, all gantry structures, regardless of gantry type, shall be designed to accommodate the maximum load of a type ATM-1 DMS spanning from post to post on the gantry.

G1 (GANTRY ONE)
SINGLE DIRECTION FULL SPAN
LANE INDICATORS AND INFORMATIVE DMS

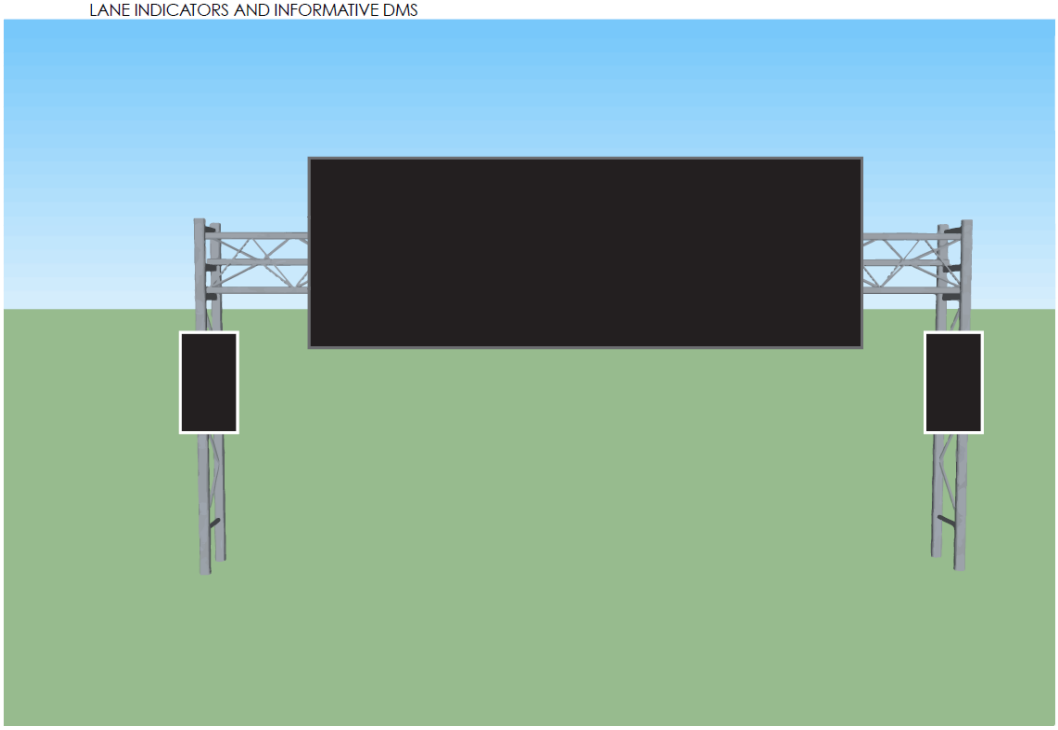

G2 (GANTRY TWO)
SINGLE DIRECTION FULL SPAN
LANE INDICATIONS ONLY

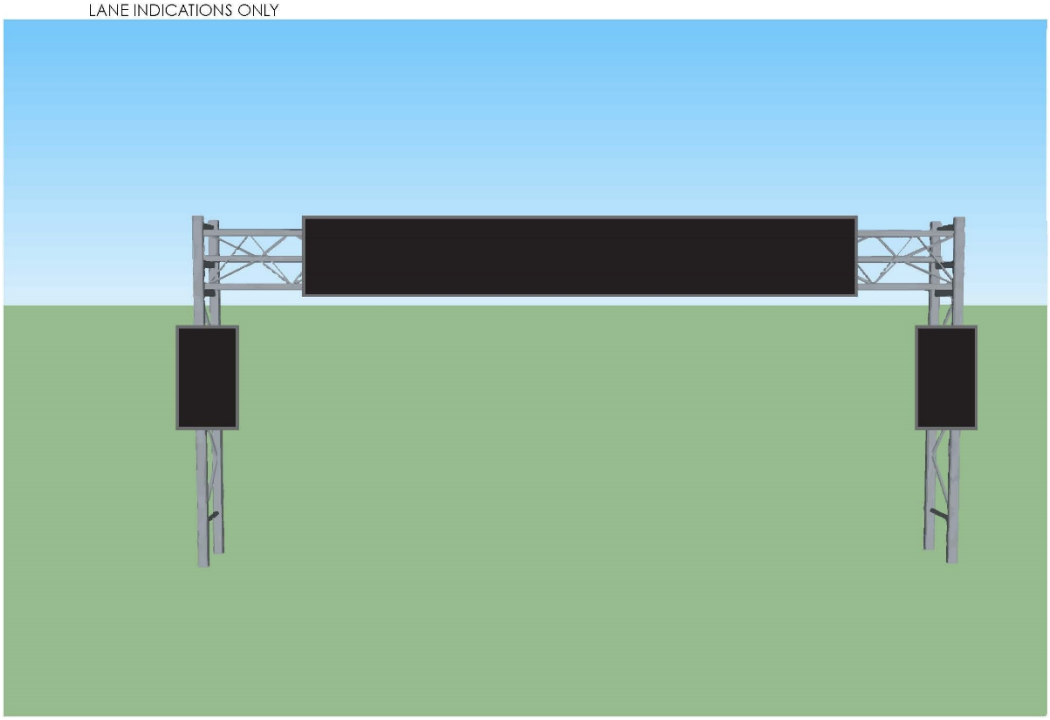

G3 (GANTRY THREE)
SINGLE DIRECTION FULL SPAN
LANE INDICATION AND FIXED PANEL EXIT SIGNS

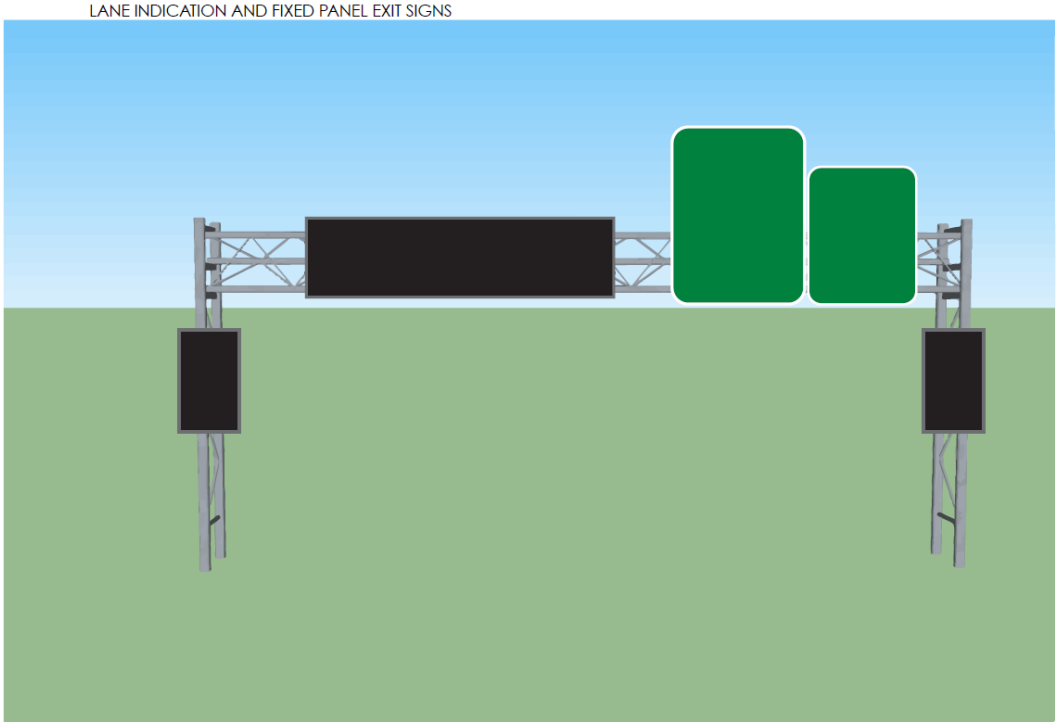

19.5.5 Testing Requirements

ATM testing shall be performed as required in Section 19.2 (*Testing*). The ATM system utilizes ITS elements including DMS and flow detectors. All FATs, PITs, SALTs, and SSTs for those elements used as part of the ATM system shall be performed as part of the required testing for the element. Only SATs will utilize the ATM software for control of the DMS on the ATM gantries.

Design-Builder shall perform a SAT for the Construction ATM System in accordance with the requirements of Section 19.2 (*Testing*), except that the duration of this Construction ATM System Acceptance Test shall be 30 days rather than 60 days. Design-Builder shall conduct the Construction ATM System Acceptance Test using the FAST Central System software located at the TMC utilizing the field elements for the Construction ATM System. Construction ATM System Acceptance shall be a prerequisite for commencement of construction requiring long-term lane closures for the lanes that they serve.

A SAT as specified in Section 19.2 (*Testing*) shall verify the required operation of the ATM gantries for the Full ATM System, with the exception of the equipment that was tested as part of the Construction ATM System Acceptance Test and turned over to the Department.

19.6 Dynamic Message Signs

Design-Builder shall design, furnish, install, and test DMS assemblies that perform as specified in this Section 19. The design and construction of all DMSs and ancillary equipment shall be compatible and interoperable with the Nevada Statewide DMS Deployment Project and shall be integrated with the FAST Central System software. All component boards shall be manufactured in North America.

Three types of full-color/full-matrix DMSs shall be required for the Project: Type ATM-1 for hybrid lane-specific and informational displays, Type ATM-2 for lane-specific displays, and Type ATM-3 for HOV and variable speed limit displays.

19.6.1 Design Requirements

The DMS Work includes the following:

1. Identify the location of DMS support structures in accordance with this Section 19 and in concert with the overall ATM design process. DMSs in the Project area shall be installed in accordance with these Technical Provisions and approved Design-Builder ITS Plan Submittals. DMSs shall be fully integrated into the ATM design.

2. Place foundations for support structures within existing Project ROW.

3. Mount DMSs on appropriate sign support structures only; do not mount DMSs on bridges.

4. Design-Builder shall identify the location of DMS controller cabinets; where possible, co-locate DMS controllers with other device controllers on a compatible roadside or pole-mounted type 332D DMS cabinet. Specify the types and sizes of all DMS and controller cabinets, in accordance with this Section 19 and with the Department's Standard Specifications. Ground mounted cabinets are required for all DMS. Pole mounted cabinets may be approved on a case by case basis.

5. Prepare drawings for DMS system in accordance with the requirements of the Contract Documents and submit shop drawings for all proposed DMS equipment.

6. Stage 1 design Submittals for the DMS shall include line-of-sight analysis showing the DMS messages are visible to motorist in all approaching lanes for a minimum of 1,000 feet.

19.6.2 Furnish and Installation Requirements

Design-Builder shall furnish and deliver complete and operational DMS units. The following requirements shall be met to create a fully functioning and operable DMS system:

1. The final accepted DMS system shall include all new DMSs with full-color/full-matrix displays. Existing DMS may remain operational and be used during construction.

2. Design-Builder shall furnish all communication equipment (including modems) required to communicate between the FAST Central System and each DMS controller.

3. Design-Builder shall furnish all cabling between cabinets and DMS cases.

4. Design-Builder shall install, connect, and integrate all electronic equipment inside the DMS cases.

5. Design-Builder shall make all required DMS wiring connections and conduct all required integration activities.

6. Design-Builder shall provide firmware development, debugging, and installation as required.

7. Design-Builder shall install the furnished sign case (complete with louvered style display) on the sign support structure.

8. Design-Builder shall determine means of sign access (front, rear, or walk-in) in coordination with their sign vendor.

9. Design-Builder shall install sign controller cabinet. Controller cabinet shall be located with line of sight to the DMS display for all DMS controlled from the cabinet.

10. Design-Builder shall install a DMS with all controller, power and communications modules and any other major maintenance items installed in the sign controller cabinet. Only sign display modules shall be installed in the sign case on the gantry.

11. Design-Builder shall include a pull-off area for maintenance at the sign controller cabinet without compromising the existing ROW.

12. Design-Builder shall install one DMS controller for each DMS mounted on a gantry. All DMS controllers associated with a single gantry shall be installed in a single controller cabinet.

13. Design-Builder shall coordinate the shutdown and startup of the DMSs with the Department and FAST. The maximum downtime for DMS is 24 hours. Design-Builder shall provide a portable DMS that is connected to and operated by the FAST Central System whenever a DMS is offline. Maximum allowable time for portable use is 30 Days.

14. DMS shall communicate in accordance with FAST Field Device Communication Protocol including NTCIP 1203 Version V2.39 and FAST Central System software.

19.6.3 Type ATM-1 Dynamic Message Sign Performance Requirements

Design-Builder shall provide full span interstate full-graphic, full-color DMSs and shall be capable of displaying three lines of 18 inch-high characters over 5-foot high lane specific displays over each of the lanes over which it is installed. Lane specific displays shall include, but are not limited to MUTCD compliant speed limit displays and lane management displays as described in the ATM Concept of Operations. The Type ATM-1 DMS shall have sufficient width to display 4-foot wide lane specific displays centered over each of the outside lanes. The Type ATM-1 DMS shall be capable of displaying 3 lines of 18-inch high characters that are clearly viewable at a distance of at least 1,000 feet and shall have sufficient height to allow for blank space between the bottom lines of text and the lane specific displays below the text.

19.6.4 Type ATM-2 Dynamic Message Sign Performance Requirements

Design-Builder shall provide full span interstate full-graphic, full-color DMSs and shall be capable of displaying 5-foot high lane specific displays over each of the lanes over which it is installed. Lane specific displays shall include, but are not limited to MUTCD compliant speed limit displays and lane management displays as described in the ATM Concept of Operations. The Type ATM-2 DMS shall have sufficient width to display 4-foot wide lane specific displays centered over each of the outside lanes. The Type ATM-2 DMS shall be capable of displaying, in place of lane specific displays, 3 lines of 18-inch high characters that are clearly viewable at a distance of at least 1,000 feet.

19.6.5 Type ATM-3 Dynamic Message Sign Performance Requirements

Design-Builder shall provide an interstate full-graphic, full-color DMS of sufficient size to support display of messages from the FAST message library. The Type ATM-3 DMS shall provide a display with a minimum of 5 feet in height and 4 feet in width and shall be mounted to the vertical supports on either side of the ATM gantries. Design-Builder shall provide DMS of a size and shape appropriate for display of MUTCD-compliant speed limit graphics, HOV restriction displays, and other supplemental messages as identified in the ATM Concept of Operations.

19.6.6 General Dynamic Message Sign Performance Requirements

All ATM Type DMS, including Type ATM-1, Type ATM-2 and Type ATM-3 shall meet the following performance requirements:

1. DMS shall be full-color/full-matrix, with variable text and graphics, with a pixel spacing of 20 millimeters (mm) or less.
2. DMS shall be capable of displaying MUTCD-compliant regulatory and advisory signs
3. DMS shall have a 30-degree viewing angle.
4. DMS shall be clearly viewable at a distance of at least 1,000 feet.
5. With the exception of replacement of pixel modules, DMS shall be maintainable without closing traffic.

6. DMS shall display the following message types:

    a. Static: The selected message shall be displayed continuously on the sign face until the sign controller blanks the sign or causes the display of another message.

    b. Flashing: All or part of a message shall be displayed and blanked alternately at rates between 0.1 second and 9.9 seconds. The flash rate shall be user-programmable in increments of 0.1 second.

    c. Scrolling: The message shall move across the display face from one side to the other. The direction of travel shall be user-selectable as either left-to-right or right-to-left.

    d. Multiple-Page: A message shall contain up to six pages of information, with each page filling the entire pixel matrix. The display time of each page shall be user-programmable from 0.1 second to 25.5 seconds, and shall be adjustable in increments of 0.1 second.

7. DMS intensity shall be able to be increased or decreased (brightened or dimmed) both automatically via photocell control, and manually, with photocell control based on ambient light levels being the default.

8. DMS casing shall be readily accessible for maintenance, with modular components designed to reduce lane closure times.

9. DMS shall have environmental sensors for ambient and internal temperature and internal humidity control.

10. DMS shall meet or exceed the temperature and environmental requirements for traffic control equipment specified in the most current version of National Electrical Manufacturers Association (NEMA) Standards Publication No. TS-1.

11. DMS shall automatically report an alarm in software, and then shut down if any of the environmental sensors indicate conditions exceeding the Department's requirements.

12. Controllers shall have the following operational characteristics:

    a. ATM DMS controller shall be located at ground level and maintenance accessible from the ground. The controller cabinet shall be placed so that a technician can see the sign messages being displayed while standing at the cabinet.

    b. ATM DMS controller shall be separate from all other controllers.

    c. ATM DMS controller shall communicate using embedded NTCIP protocol.

    d. ATM DMS controller shall contain memory for storing changeable and permanent messages, schedules, and other necessary files for controller operation. DMS controller configuration shall be retained during power failures.

    e. ATM DMS controller shall include a front panel user interface with graphical Liquid Crystal Display (LCD) and keypad for direct operation and diagnostics as described herein.

    f. ATM DMS controller shall connect to the sign under control of the unit via a communications protocol.

g. ATM DMS controller shall provide Ethernet connectivity to the switch for control from the FAST TMC.

h. ATM DMS controller shall contain a serial port for local connections.

i. ATM DMS controller shall contain DMS-specific control firmware (embedded software) to monitor all external and internal sensors and communication inputs and control the display modules as directed by external control software and the front panel interface.

j. NTCIP shall be natively supported in the ATM DMS controller. External protocol converter or translator devices shall not be allowed.

19.6.7 Testing Requirements

DMS testing shall be performed prior to, during and after DMS installation as required in Section 19.2 (*Testing*) and include the following test phases:

1. FATs: Design-Builder shall conduct testing to verify that the DMS supports all required functionality after fabrication but before shipping. NTCIP compliance testing shall be included in the FAT. Design-Builder shall obtain the Department-approved NTCIP MIB from the Department to support the full-color/full-matrix DMS prior to starting the development of any DMS test procedures.

2. PITs: Design-Builder shall conduct testing upon receipt of equipment but before installation to verify the DMS operates correctly.

3. SALTs: Design-Builder shall conduct testing to verify that the DMS operates correctly after installation but before interconnection with communications equipment.

4. SSTs: Design-Builder shall conduct testing to verify that a connected controller and DMS function correctly and can be operated with test software from the hub. For each DMS, Design-Builder shall demonstrate that messages can be selected, uploaded, and confirmed at the test workstation. SSTs shall test the DMS assembly, DMS communications protocol, communications subsystem and electrical service.

5. SATs: Design-Builder shall conduct testing using the FAST Central System software located at the TMC.

19.7 Flow Detector System

Design-Builder shall furnish, install, calibrate, and test a vehicle detection system (the Flow Detector System) meeting the requirements of this Section 19. The system shall include, but is not limited to, a detector, associated hardware, miscellaneous cabling, connectors, surge protection, etc. Design-Builder shall supply the required amount of detection equipment to monitor all lanes of travel covered by the detector system. Existing detector equipment within the Project ROW may be reused, but Design-Builder shall ensure that the installed equipment meets all the requirements.

Freeway type application shall be used to install detectors on all lanes in the I-15 and US 95/I-515 freeway system Work areas within the Department's Project Infrastructure limits. The detector shall be capable of accurately providing traffic volume, speed, lane occupancy, and classification count data independent of direction of traffic. The detector's accuracy shall be a minimum of 95

percent for volume and occupancy, minimum 90 percent for speed measurements between vehicle speeds from 15 mph to 90 mph, and minimum 80 percent for classification counts.

For all locations, Design-Builder shall submit shop drawings for approval for complete system. Shop drawings shall include all hardware, cabling, connectors, and other incidental accessories related to the flow detector system.

19.7.1 Furnish and Installation Requirements

The design and construction of all flow detector systems and ancillary equipment shall be compatible, inter-operable, and integrated with the FAST Central System Software. Flow detectors shall support the RTMS Communication Protocol Version 1.0 (X3 Protocol). Design-Builder shall provide flow detectors covering all mainline lanes at 0.33-mile average spacing (0.2-mile minimum spacing, 0.4-mile maximum spacing).

Separate detectors shall be installed for each direction of travel on the mainline lanes. The use of a single detector to monitor traffic in both directions shall not be allowed.

Design-Builder shall provide flow detectors on all ramps and collector distributors.

Existing detectors may remain after construction, provided the 0.33-mile spacing is provided and they meet the detection accuracy requirements.

Design-Builder shall place all new detectors in conjunction with the extension of the ITS infrastructure as needed to meet the detection spacing requirements.

If microwave detection technology is used, Design-Builder shall not mount flow detectors on existing or new overpass bridge structures. Poles used for mounting flow detectors shall conform to the ITS Standards for Poles in Attachment 19-1 (*Standard ITS Drawings*).

If loop detectors are used, Design-Builder shall provide pre-formed loops. Cut in loops shall not be installed in the roadway.

Design-Builder shall furnish, install, and test all components, and make all power and data connections to provide a fully operational detector system that is compatible with the existing Central System Software.

All stand-alone terminal servers used for flow detectors shall be compliant with 802.1x

Existing Equipment: All existing detection devices that are to be replaced shall remain in service and operational until an operational detection station is in place so that monitored coverage is maintained throughout construction. Design-Builder shall coordinate all shutdown, start-up, and testing of the detector system with the Department. When installing replacement detector stations, replace all existing pull box(es) regardless of their condition.

Power Supply: Design-Builder shall supply a power supply for above equipment as per manufacturer's recommendations. All power supplies shall be temperature hardened to meet NEMA TS1/TS2 specifications.

19.7.2 Testing Requirements

Flow detector testing shall be performed before, during and after installation as required in Section 19.2 (*Testing*) and include the following test phases:

1. SALTs: Design-Builder shall conduct a SALT for each flow detector system installation prior to interconnection to the communications using the SALT procedures approved for each detection technology. Proper operation of all flow detector system elements shall be demonstrated through controlled testing, including verification of lane configurations and detector accuracy.

2. SSTs: Design-Builder shall conduct a SST from the hub for each flow detector system used on the Project. Proper operation of all flow detector system elements will be demonstrated through controlled testing.

3. SATs: Design-Builder shall conduct a SST for each flow detector system used on the project. Proper operation of all flow detector system elements will be demonstrated through controlled testing.

19.8 Closed Circuit Television

The CCTV system and system components shall meet the minimum operational and functional design criteria described below.

19.8.1 Location and Coverage Requirements

Pan/tilt/zoom (PTZ) CCTV cameras shall be installed in the Project ROW to provide full video coverage of the new or existing roadway corridor within the I-15 and US 95/I-515 freeway system Work areas within the Department's Project Infrastructure limits. Full video coverage shall be defined as the ability for the operator to visually detect a stopped vehicle anywhere on the mainline, and on any ramp at system interchanges. Full coverage shall imply that the view ranges of adjacent cameras are overlapping, and there will be with no blind spots large enough to obscure an entire vehicle, approximately 17 feet in length, stopped on the roadway. Existing CCTV cameras may be used or relocated along with installation of new cameras as needed to meet the coverage requirements.

For DMS message verification by the Department's TMC operators, installation of CCTV fixed mount cameras shall be coordinated with the proposed locations of DMSs along the corridor so that each DMS, regardless of type, is viewable by one camera within a maximum distance of 0.50-mile from the DMS. The DMS monitoring cameras shall be located so that all DMS on a gantry can be viewed within the field of view of the single camera. Cameras installed to support the Construction ATM System shall be turned over to the Department along with the Construction ATM System gantries upon Construction ATM System Acceptance.

Cameras shall be installed on Department-standard CCTV poles (as shown in Attachment 19-1 [*Standard ITS Drawings*]) of adequate height and spacing to achieve the coverage requirements stated herein. Provide the Department approved camera lowering system on all camera poles. As new signing and structures are proposed for the Project, three-dimensional line-of-sight analyses shall be performed and submitted for review and comment by the Department to confirm that there are no significant line-of-sight obstructions that would be in non-conformance with

coverage requirements. Results of such line-of-sight analyses confirming full coverage of the roadway shall be reviewed by the Department before construction begins.

19.8.2 Closed-Circuit Television System Requirements

The CCTV field equipment, together with the CCTV central equipment in the TMC, will form a complete CCTV system that shall meet the following requirements:

1. The equipment shall be designed for ease of maintenance; dome style cameras are not acceptable.

2. All component parts shall be readily accessible for inspection and maintenance.

3. The camera shall be provided with electronic stabilization using the two-motion frequency selectable stabilization method.

4. The video camera positioning system shall provide dual-mode day (color) and night (monochrome) video camera with optical zoom lens and a high-speed positioning system.

    a. The lens shall have a focal length of 3.3 mm to 119 mm (35:1) with auto/manual focus.

    b. The optical zoom shall be 36X and the digital zoom shall provide a range of up to 12X with a minimum effective zoom ratio of 420:1.

    c. The video camera shall be capable of providing an effective horizontal angle of view of 57 degrees wide angle to 1.7 degrees maximum telephoto.

    d. The pan function shall provide 360 degrees of continuous rotation, with a variable manual speed from 0.1 degree per second to 40 degrees per second.

    e. The tilt function shall provide 180 degrees of movement +90 degrees to -90 degrees, with a variable manual speed from 0.1 degree per second to 40 degrees per second.

    f. Up to 64 presets shall be available for storing and recalling zoom, pan, and tilt positions.

    g. The positioner shall be capable of 8-point or 16-point compass annotations with primary direction spelled out, intermediate directions abbreviated with two letters, and a tour sequence defined using up to 64 preset positions.

    h. All camera functions and pan and tilt functions shall be operable via RS 422 serial communications.

5. Communications protocol command set shall be the FAST Field Device Communications Protocols Revision vB13. The FAST protocol is available upon request.

6. The camera shall include the following features:

    a. ¼-inch progressive scan color sensor.

    b. Selectable long-term integration to ½ second with frame store video output.

    c. Selectable shutter speeds from 1/60 second to 1/30,000 second.

    d. Crystal or Internal phase adjust line-lock, software adjustable.

e. The camera shall provide Wide Dynamic Range (WDR).

f. Camera addressing.

7. The camera shall meet or exceed the following specifications:

a. Resolution: 520 horizontal, 400 vertical.

b. Video Output: NTSC, 1 V p-p at 75 ohms, unbalanced.

c. Optical Zoom Speed: two speeds, from approximately 2.9 seconds to 5.8 seconds full range.

d. Minimum Focus Distance: 40 inches in telephoto, 0.4-inch in wide angle.

e. Auto Focus: Selectable auto/manual; minimum scene illumination for reliable auto focus, 30-percent video.

f. Manual Focus Speed: one speed, approximately 2.0 seconds to full range.

g. Zoom and Focus Presets: 64 preset positions; focus shall be auto and, if programmed, shall display the Preset ID.

h. Flash Memory: Update firmware and new features.

i. Auto Iris: Iris shall automatically adjust to compensate for changes in scene illumination and maintain constant video level output within sensitivity specifications.

j. Manual Iris:

1) A decrease in the video level value shall give the effect of open iris.

2) An increase in the video level shall give the effect of close iris.

k. Gamma.

l. AGC.

m. Color Balance: Auto-tracking color balance/manual with adjustable red and blue levels.

n. Signal to Noise Ratio: Greater than 50 dB.

o. Sensitivity (3,200K): Scene illumination at F1.4, wide angle:

0.2 Lux at 1/2 Sec.	F1.4 Shutter	
0.55 Lux at 1/60 Sec.	F1.4 Shutter	Color
0.018 Lux at 1/2 Sec.	F1.4 Shutter	Color
0.00018 Lux at 1/2 Sec.	F1.4 Shutter	Black/White

p. Camera Housing:

1) Each camera housing shall be a corrosion-resistant, tamperproof-sealed, and pressurized with 5 psi of dry nitrogen and shall include a Schrader purge fitting and 20-psi relief valve.

2) The camera housing shall include a loss of pressure sensor that will trigger an alarm message that will be inserted in the video output signal.

3) The internal humidity of the housing shall be less than 10 percent when sealed and pressurized.

a. Desiccant packs shall be securely placed inside the housing to absorb any residual moisture and maintain internal humidity at 10 percent or less.

b. A sun shield shall be provided to shield the entire housing from direct sunlight.

8. Camera shall include a character generator meeting the following specifications:

a. ID characters shall be white with a black border.

b. A maximum of six lines of user-programmable alphanumeric text shall be displayed, plus two fixed lines for low-pressure indicator and privacy zones.

c. Text shall only be displayed in uppercase characters.

d. Camera ID:

1) Up to two lines, each up to 24 characters long.

2) If both lines are programmed, Line 1 of Camera ID shall always appear above Line 2 of Camera ID regardless of top or bottom selection.

e. Preset ID:

1) One line, up to 24 characters long, user-programmable for each of the 64 preset positions.

2) When a preset position is recalled, the corresponding preset ID shall be displayed.

3) The preset ID shall remain displayed until a pan, tilt, zoom, manual focus, auto focus select, or another preset command is received.

f. Compass Annotation:

1) 8-point or 16-point compass annotation shall be settable for a true north position.

2) Display shall include north, northeast, east, southeast, south, southwest, west, and northwest.

3) Position shall be able to be grouped with the site location or separate from site location.

4) Position shall be user-selectable for 3-second time-out or permanent display and user-enabled/disabled.

g. Azimuth and Elevation:

1) Position shall be displayed in 0 degree to 359 degrees for AZ position, +90 degrees to -90 degrees in elevation.

2) Position shall be user-selectable for 3-second time-out or permanent display and user-enabled/disabled.

h. Low Pressure Indicator:

1) One line "Low Pressure" messages shall be displayed in blinking or non-blinking mode when activated by low internal pressure.

2) Adjustable set points by altitude shall be provided via the serial port to activate low-pressure.

3) Message shall be user-enabled/disabled.

4) In maintenance mode, readings of the internal pressure of the camera housing shall be displayed in psi increments.

i. Internal Temperature Indicator:

1) One line, in Degrees Celsius (°C), numeric messages shall be displayed in blinking or non-blinking mode.

2) Message shall be user-enabled/disabled.

3) In maintenance mode, readings of the internal temperature of the camera housing shall be in 1-degree increments.

j. Sector Message:

1) Up to 16 sectors in 360 degrees shall be able to be defined with up to 24 characters long.

2) Message shall be programmable.

k. Message Positioning:

1) Right side positioning shall be accomplished by padding left side of message with spaces.

2) Messages shall be capable of being positioned at either the top or the bottom of display.

3) Blank lines shall not displayed.

4) Any programmed line being displayed shall fill in toward the top if top positioning is selected, or toward the bottom if bottom position is selected.

l. Privacy Zones:

1) Video blanked out for up to eight privacy zones shall be provided.

2) 1-line and numeric messages shall be displayed.

3) Message shall be displayed in blinking or non-blinking mode and be user-enabled/disabled.

4) Privacy zones shall be programmed.

9. Communication and camera addressing protocol shall meet the following specifications:

a. Control and addressing shall be via Ethernet or serial communications.

b. Upon receipt of any given command, the camera positioning system shall not take longer than 1.0 second to respond.

c. All programmable functions shall be stored in nonvolatile memory and shall not be lost if a power failure occurs.

d. System configurations such as video privacy zones, preset text, and sector ID shall be able to be stored in a computer file.

e. A camera personality shall be able to be cloned or uploaded into a camera in the event that a camera replacement is necessary.

10. Pan and tilt positioning shall meet the following specifications:

a. Continuous rotation capability in either direction.

b. 180 degrees of tilt movement, +90 degrees to -90 degrees unobstructed.

c. Pan Speed (Operator Control): Variable from 0.1 degree per second to 80 degrees per second.

d. Pan Speed (Preset Control): 120 degrees per second.

e. Tilt Speed (Operator Control): Variable from 0.1 degree per second to 40 degrees per second.

f. Tilt Speed (Preset Control): 120 degrees per second.

g. 64 pan and tilt preset positions with repeatability within ±0.2 degree.

h. The positioning system shall be invertible for mounting to a ceiling.

11. The camera shall provide tour sequencing that meets the following specifications:

a. Eight tour sequences shall be able to be defined.

b. The tour shall be programmed by selecting the preset position by number and then selecting a dwell time.

1) The presets shall be able to be used in any order.

2) The same preset shall be able to be used more than once as long as the total number of preset positions used does not exceed 32.

3) The dwell time shall define the length of time paused at each preset position, shall be from 1 second to 60 seconds, and shall be capable of being changed individually for all stops on the tour.

4) If the appropriate preset ID is programmed, it shall be displayed for each preset position used on the tour.

5) The tour shall stop upon receipt of a pan command.

6) All programmable functions shall be stored in non-volatile memory.

12. The camera shall meet the following power requirements:

a. Operating Voltage: 89 VAC to 135 VAC, 120 VAC Nominal, 50/60 Hz ±3 Hz, and in accordance with NEMA TS-2, Section 2.1.2, "Traffic Control System."

b. The line variation specifications shall be tested to meet these specifications by an outside agency other than the camera manufacturer. The tests shall be provided upon request.

c. Primary Input Power Interruption: Comply with NEMA TS-2, Section 2.1.4, "Power Interruption."

d. Transients Power Service:

1) The CCTV field equipment shall comply with NEMA TS-2, Section 2.1.6, "Transients, Power Service."

2) The surge specifications shall be tested to meet these specifications by an outside agency other than the camera manufacturer.

3) The tests shall be provided upon request.

13. The camera shall meet the following environmental specifications:

a. Ambient Temperature Limits (Operating): -30°F to 165°F, NEMA TS-2, Section 2.1.5.1.

b. Ambient Temperature Limits (Storage): -30°F to 165°F, NEMA TS-2, Section 2.1.5.1.

c. The environmental specifications of the camera shall be tested to meet these specifications by an outside agency other than the camera manufacturer. The tests shall be provided upon request.

d. Humidity: Up to 100-percent relative humidity in accordance with MIL-E-5400T, paragraph 3.2.24.4, IP 67 rating.

e. Other: Withstand exposure to sand, dust, fungus, and salt atmospheres in accordance with MIL E 5400T, paragraph 3.2.24.7, paragraph 3.2.24.8, and paragraph 3.2.24.9.

f. Shock: Up to 10 g, 11 ms, in any axis under non-operating conditions, in accordance with MIL-E-5400T, paragraph 3.2.24.6.

g. Vibration: Sine vibration from 5 to 30 Hz, ½ g, three axes, 1 hour without damage.

h. Wind Loading: 110-mph wind load survivability with 30% gust factor, operability to 70 mph.

14. The camera shall meet the following mechanical specifications:

    a. Must be compatible with the manufacturer's lowering device.

15. The camera shall meet the following mounting requirements:

    a. The camera positioning system shall include five possible mounting configurations:

        1) Wall mount
        2) Pole mount
        3) Parapet mount
        4) Corner mount
        5) Pedestal mount

16. The CCTV system shall include a local Camera Control Unit (CCU) to provide convenient onsite camera control of camera positioning systems. The CCU shall meeting the following specifications:

    a. The unit shall offer system protocol from most major CCTV camera manufacturers.

    b. The unit shall withstand the harsh operating environment associated with roadside installations.

    c. Local control functions shall be accomplished using front panel switches that include pan and tilt, lens zoom, focus, and iris.

    d. Focus and iris shall include an auto/manual toggle with a Light Emitting Diode (LED) indication of the current state.

    e. A local/remote switch shall be included that transfers control from the central system to the control unit.

        1) This function shall have a built-in 5-minute timer that automatically transfers control back to the remote mode if left unintentionally in the local mode.

    f. The CCU shall include provisions to connect to a laptop PC for programming advanced camera site settings and that allows extended camera control functions.

    g. Electrical:

        1) Operating voltage: 89 VAC to 135 VAC, 47 to 63 Hz, NEMA TS-2, Section 2.1.2.

    h. Mounting:

        1) EIA standard 19-inch cabinet, 1 RU.

i. Front Panel Controls:

1) Pan: Three-position momentary switch (pan right, stop, pan left).

2) Tilt: Three-position momentary switch (tilt down, stop, tilt up).

3) Zoom: Three-position momentary switch (tele, stop, wide).

4) Focus Mode: Two-position momentary switch (auto/manual) with LED indication of manual mode.

5) Focus Control: Three-position momentary switch (near, stop, far).

17. The fixed mount DMS monitoring cameras shall meet the following specifications:

a. Supply and make operational a color fixed camera.

b. Camera shall be a H.264 High Definition fixed camera.

c. Housing and camera shall carry a IP67 rating or better.

d. Camera shall have true day/night camera capable of operating in low light 0.005 lux (0.0005 fc)

e. Camera shall be equipped with image stabilization to minimize vibration do to vibration or wind.

f. Camera shall be of a NEMA TS2 Temperature range of - 40 °C to + 74 °C.

g. Camera shall be capable of defogging/dehazing the lens.

18. The CCTV system shall include a cable harness meeting the following specifications:

a. The cables used for CCTV control, video, and 120 VAC power shall be installed as an integrated unit.

b. Supply a wiring harness meeting the CCTV camera manufactures requirements.

c. The wiring shall be installed from the CCTV unit to the in-cabinet control unit.

d. The Design-Builder shall be responsible for determining the length needed, and order the correct size accordingly.

e. Connectors at both ends of the cable are required.

19. The CCTV system shall include surge protection meeting the following specifications:

a. Surge protectors shall be installed in the CCTV cabinet for all conductors (power, data, and video) between the pole-mounted and cabinet-mounted CCTV equipment. Each surge protector shall be grounded to the surge protector terminal block mounted to the cabinet rack. Surge protector leads shall be installed that are at least 3 feet in length and installed as straight as possible from the surge protector to the ground lug.

b. Wire, ground, and bond equipment in accordance with Section 250-86 of the NEC.

c. Surge protection shall be provided for the following cables:

1) Coaxial Cable Surge Protector: Install one coaxial cable surge protector on the coaxial cable. Use surge protectors that meet the following requirements:

a. Connector: BNC type

b. Attenuation: 0.1 dB @ 10 MHz

c. Input/Output Impedance: 75 ohms nominal

d. Peak Surge Current: 500 amperes minimum

e. Response Time: 1 nanosecond or less

2) Power Cable Surge Protector: Power cable surge protectors shall be installed on all power conductors. At locations where the receiver/driver is integrated with the pan/tilt unit, this surge protector is not required. Use surge protectors that meet the following requirements:

a. Clamping Mode: Two-stage

b. Clamping Voltage: 350 volts for a 20,000-ampere, 10,000-volts per microsecond waveform

c. Peak Clamping Current: 20,000 amperes for an 8 x 20-microsecond waveform

d. Response Time: 0.5 microseconds or less

e. Number of Peak Surges: 20 surges at peak current, minimum

f. Holdover Current: Zero

g. Service Current Rating: Adequate for the continuous load imposed by the equipment served

3) Low-Voltage Control Cable Surge Protector: Low-voltage control cable surge protectors shall be installed on each data conductor. Use surge protectors that meet the following requirements:

a. Clamping Mode: Two-stage, hybrid

b. Clamping Voltage: As appropriate for the specific circuit as approved by the Engineer

c. Peak Clamping Current: 4,000 amperes for an 8 x 20-microsecond waveform

d. Response Time: 30 nanoseconds or less

e. Number of Peak Surges: 25 surges at peak current, minimum

20. The CCTV system shall include a video encoder meeting the following specifications:

a. Furnish, install, and test the video encoder. The encoder shall consist of an encoder, any required cables, surge protection, power supplies, connections, mounting hardware, and various accessories as needed. The encoder shall be compliant with 802.1x. Video encoder power supplies shall be temperature hardened to meet the NEMA TS1 / TS2 specifications.

b. Supply an encoder from the following list:

1) Moxa VPort 461-0N-T
2) CoreTec VCX-7400-E
3) Teleste MPH-241
4) Axis Q7424-R

c. Supply a rugged field deployable and user selectable ISO/IEC compliant Moving Picture Experts Group MPEG-4, and H.264 video encoder. This video encoder will transmit data via RS-232/422 and accept standard National Television Standards Committee (NTSC) composite video signal as input, digitally compress it and transmit it over the Department's communication network.

21. All CCTV equipment supplied and installed on this Project shall be labeled clearly with the Project and location designation.

19.8.3 Testing Requirements

CCTV system testing shall be performed as required in Section 19.2 (*Testing*) and include the following test phases:

1. FATs: Design-Builder shall provide certification that the camera housing window or acrylic lens will not yellow, introduce appreciable light loss, or distort over a 10-year life in a desert environment.

2. SALTs: For each camera unit, Design-Builder shall conduct approved SALT that exercise all standalone (non-network) functional operations of the equipment including the following:

   a. Control of focus, iris, and power on/off

   b. Range of PTZ and digital zoom

   c. Presence and quality of video signal

   d. Sector text generation

   e. Pan and tilt limit stops are set to the Engineer's satisfaction.

   For each video encoder unit, Design-Builder shall conduct an approved SALT that exercises all standalone functional operations of the equipment including the following:

   f. The video encoder will be powered up and allowed to initialize, boot, and run self-diagnostic tests as defined in the approved test procedures.

3. SSTs: For each camera location that is installed and interconnected in a system, Design-Builder shall conduct approved SSTs from the operator workstation in the hub that include the following:

   a. The encoder installation shall have a performance level of 99.0% successful packet transmission or better monitored for period 24 hours from the FAST operations center.

   b. The encoder shall not experience network jitter in excess of 5 milliseconds from the average ping time while monitoring for a duration of 10 minutes from the FAST operations center.

c. Transmission of quality video to the TMC

d. Response to all central software commands identified under functional requirements

e. Display of video images on the selected monitor

f. Horizontal and vertical resolution*

g. Signal to noise ratio*

h. For CCTV camera installations that have camera lowering devices, detach and secure the camera connection five times and verify that the signal is reestablished at the TMC each time.

*Perform these tests if in the opinion of the Department the picture quality transmitted over the network is lower than the picture quality of other cameras that are operating correctly. Measure the horizontal/vertical resolution and the Signal-to-Noise (S/N) ratio on a monitor in the TMC for a picture generated by the CCTV camera installation furthest from the TMC and at two other locations specified by the Department to verify compliance. The S/N ratio shall not be lower than 48 dB.

4. SATs: At least once per week, Design-Builder shall demonstrate that all CCTV system functions tested in the SST are operational. The SST requirement to raise and lower the camera five times is reduced to just one time during the final week of the SAT.

At least once per a day, Design-Builder shall demonstrate that all video encoder functions as tested in the SST are operational.

19.9 Ramp Meters

Design-Builder shall design, supply, and install all necessary permanent ramp meters and related infrastructure for the Project as provided by this Section 19 and the Department's *Managed Lanes and Ramp Metering Design Manual*.

Design-Builder shall design the Project to include ramp metering at all ramps that are not system to system. New ramp metering to be constructed shall include, at a minimum, the following locations:

- I-15 northbound Sahara Avenue on-ramp
- I-15 northbound Charleston Boulevard on-ramp
- I-15 southbound Charleston Boulevard on-ramp
- Martin Luther King Boulevard/Pinto to southbound CD road on-ramp

Design-Builder shall design the Project to allow for modifications to existing ramp metering sites meeting the Department's design requirements. Existing ramp meters are installed at the following locations:

- I-15 southbound Sahara Avenue on-ramp
- US 95 northbound/westbound Martin Luther King Boulevard on-ramp
- US 95 northbound/westbound Rancho Drive on-ramp
- US 95 southbound/Eastbound Rancho Drive on-ramp

Design-Builder will be provided by the Department the necessary ramp meter 170 controller software to provide a fully functioning ramp-metering system compatible with the FAST Central System software.

Design-Builder shall provide communications between all permanent ramp-metering sites for the Project and the Department's Central System (FAST) using FAST Field Device Communications Protocols Revision vB13.

New ramp-metering sites on the Project will be integrated with the existing Central Control System using the following approach:

- Design-Builder shall design, program, adjust controller timings, test, integrate, and commission new ramp meters in accordance with the Department's requirements.
- The Department will evaluate the proposed timings and direct any changes to the timings as necessary to accommodate traffic demand.

Design-Builder shall install and connect power service for permanent ramp meters for the Project. All power supplies shall be temperature hardened to meet the NEMA TS1 / TS2 specifications.

The ramp-metering system shall communicate with the TMC using an Ethernet-based fiber optic system. All standalone terminal servers used for Ramp Meters shall be compliant with 802.1x.

19.9.1 Testing Requirements

Ramp meter testing shall be performed before, during, and after installation as required in Section 19.2 (*Testing*) and include the following test phases:

1. SALTs: Design-Builder shall conduct testing to verify that all components of the ramp meter are working as required onsite prior to interconnection to the communications.
2. SSTs: Design-Builder shall conduct testing to verify that ramp-metering functions as required through the communication system. This test shall allow for each ramp meter to run error-free for 72 hours using the Department's Central System software (FAST).
3. SATs: Design-Builder shall conduct 60-day testing to verify that the system, including all ramp meters, is operating trouble-free.

19.10 Count Stations

Design-Builder shall furnish and install all components necessary to provide fully operational detector loop installations. The count stations shall provide mainline freeway traffic data, freeway on-ramp data, and freeway off-ramp data. Design-Builder shall design and locate detector loop facilities accommodate safe access for maintenance personnel. Ramp count station loop lead-ins shall be unterminated in a pull box for connection to NDOT count station equipment by NDOT personnel. Mainline count station loop lead-ins shall be terminated at the cabinet field wire terminal blocks for connection to NDOT count station equipment by NDOT personnel. No utilities shall be required.

Based on the roadway geometry in the Reference Design drawings included in the RIDs, Design-Builder shall provide fully functioning count stations at the following locations:

Mainline:

- I-15 between Sahara and Oakey/Wyoming
- I-15 between Charleston and Alta/Bonneville

Ramps:

- Sahara to I-15 northbound on-ramp
- CD-south to Sahara off-ramps
- Neon Gateway on-ramp to I-15 southbound HOV lanes
- CD-south on-ramp to I-15 southbound
- I-15 northbound HOV lanes to Neon Gateway off-ramp
- I-15 northbound to Charleston off-ramp
- Charleston on-ramp to I-15 southbound
- CD-south to Sahara slip off-ramp
- I-15 southbound to Sahara off-ramp
- Neon Gateway on-ramp to I-15 northbound HOV lanes
- I-15 southbound HOV lanes to Neon Gateway off-ramp
- I-15 northbound/Charleston to Grand Central off-ramp
- I-15 northbound/Charleston to Alta/Bonneville off-ramp
- Pinto/Martin Luther King on-ramp to CD-south
- Charleston on-ramp to I-15 northbound
- I-15 southbound to Charleston off-ramp
- I-15 northbound HOV lanes to US 95 HOV lane off-ramp
- CD-south to Charleston slip off-ramp
- I-15 northbound to US 95 westbound/Martin Luther King off-ramp
- I-15 northbound to US 95 eastbound off-ramp
- US 95 westbound on-ramp to I-15 southbound
- Martin Luther King on-ramp to CD-south
- Martin Luther King to US 95/I-515 southbound on-ramp
- Martin Luther King/US 95 southbound to I-15 northbound on-ramp
- Martin Luther King/US 95 southbound off-ramp to I-15 southbound/CD-south
- US 95 southbound off-ramp to I-15 northbound
- Rancho to US 95 southbound on-ramp
- US 95 southbound HOV lane off-ramp to I-15 HOV lanes
- I-15 HOV lanes to US 95 northbound HOV lane on-ramp

Other count stations may be required based on Design-Builder's final design.

19.10.1 Design and Construction Requirements

Design and construction of mainline count stations shall be per Drawing T-30.1.4.4 of the Department's Standard Plans in Attachment 19-1.

Design and construction of ramp count stations shall be per Drawing T-30.1.4.3 of the Department's Standard Plans in Attachment 19-1.

19.11 Fiber Optic Communications

Design-Builder shall design a fiber optic system capable of supporting all traffic management functions of the Project. Design-Builder is responsible for determining the exact location of fiber

optic plant to support deployed ITS field equipment. New 144-strand fiber backbones with physical redundancy on both side of the road are required for I-15 freeway system Work areas within the Department's Project Infrastructure limits. Existing fiber backbones may be used on US-95. Where fiber optic cable is currently in place, Design-Builder shall upgrade any fiber optic cable that does not meet the requirements of Section 19.11.1 (*Fiber Optic Trunk Line Cable*). Existing conduits may be used for new cable if they meet the requirements.

Design-Builder shall furnish, install, and test fiber optic cables, jumper cables (pigtails), splice closures, termination units, underground splice closures, and related equipment.

Design-Builder shall obtain fiber optic cables, fiber optic accessories, jumper cables, pigtails, and distribution equipment from a certified ISO 9001 or 9002 manufacturer.

19.11.1 Fiber Optic Trunk Line Cable

Design-Builder shall use only dielectric, single-mode fiber optic (SMFO) cables that are of loose tube construction, filled with a water-blocking material and suitable for installation in underground conduit and field cabinets. Design-Builder shall use cable that complies with the requirements of RUS 1755.900 except as modified herein. New fiber cable shall align with the cores of the existing cable. No core mismatches shall be allowed.

Design-Builder shall use fiber optic cable that complies with the following requirements:

1. Cladding diameter: 125±1.0 mm
2. Core-to-cladding offset: 0.8 mm
3. Cladding non-circularity: 1.0%
4. Maximum attenuation: 0.35 dB/km at 1,310 nm; 0.25 dB/km at 1,550 nm
5. Attenuation uniformity: No point discontinuity greater than 0.1 dB at either 1,310 nm or 1,550 nm
6. Mode-field diameter (matched cladding): 9.3±0.5 mm at 1,310 nm; 10.5±1.0 mm at 1,550 nm
7. Maximum chromatic dispersion: 3.2 ps/(nm x km) from 1,285 nm to 1,330 nm and <18 ps/(nm x km) at 1,550 nm
8. Fiber polarization mode dispersion: 0.5 ps/(km)1/2
9. Fiber coating: Dual layered, ultraviolet-cured acrylate applied by the fiber manufacture
10. Coating diameter: 245±10 mm
11. Minimum storage temperature range: -40°C to +70°C
12. Minimum operating temperature range: -20°C to +70°C
13. Rated life: Certify a 20-year life expectancy when installed to manufacturer's specifications

The change in attenuation for single-mode cable from -20°C to +70°C shall not exceed 0.2 dB/km at 1,550 nm.

Buffer Tubes: Design-Builder shall use cable where each buffer tube is filled with a non-hygroscopic, non-nutritive to fungus, electrically nonconductive, homogenous gel that is free from dirt and foreign matter. The gel shall allow free movement of the fibers, without loss of performance, during installation and normal operation including expansion and contraction of the buffer tubes. The gel shall be readily removable with conventional nontoxic solvents.

Stranding: Cable construction shall strand the buffer tubes around a central member using the reverse oscillation or "S-Z" stranding process. Trunk line cable shall use filler rods to lend symmetry to the cable section.

Central Strength Member: Design-Builder shall use cable that has a central strength member designed to prevent buckling of the cable.

Cable Core: Design-Builder shall use cable that has a dry water-blocking material that blocks the migration of moisture in the cable interstices.

Tensile Strength Members: Design-Builder shall use cable that has tensile strength members designed to minimize cable elongation due to installation forces and temperature variation. Cable shall withstand a 2,700-N tensile load applied per EIA-455-33 where the change in attenuation at 1,550 nm does not exceed 0.2 dB during loading and 0.1 dB after loading. Cable shall be rated for an installed tensile service load of 890 N or more.

19.11.2 Furnish and Installation Requirements

For each cable, Design-Builder shall base the length on field measurements. Design-Builder shall include in the measurement the required amount of slack cable at the field cabinets, hub locations, and pull boxes as required by Design-Builder’s design plans. 100 feet of slack shall be included in each pull box and cable vault. Design-Builder shall perform all final length measurements and order cable accordingly.

Fiber optic cable shall be factory-labelled with “Department Fiber Optic Cable” running along the length of the cable.

Design-Builder shall ensure that the following information is stenciled, lettered, or provided on a weatherproof tag firmly attached to the reel:

1. Factory order number
2. Job number
3. Ship date
4. Manufacturer's cable code
5. Type of cable (single mode, outdoor, indoor)
6. Beginning and ending length markings
7. Measured length and attenuation

Design-Builder shall install fiber optic cables continuous and without splices between allowable splice points as identified in these Technical Provisions. Design-Builder shall only splice fibers at underground splice closures and fiber optic splice units that are housed in hub buildings.

Design-Builder shall carefully handle fiber optic cable. Design-Builder shall not pull cable along the ground or over or around obstructions. Design-Builder shall not pull cable over edges or corners or through unnecessary curves or bends. Design-Builder shall not bend fiber optic cable

greater than 10 times the cable diameter under no stress and 20 times cable diameter under stress at any time. Design-Builder shall use manufacturer-approved pulling grips, cable guides, feeders, shoes and bushings to prevent damage to the cable during installation.

When removing cable from the reel prior to installation, Design-Builder shall place it in a "figure-8" configuration to prevent kinking or twisting. Design-Builder shall take care to relieve pressure on the cable at crossovers by placing cardboard shims (or equivalent method) or by creating additional “figure-8s.”

Design-Builder shall furnish the Department with the cable manufacturer's recommended procedures, maximum pulling tension, a list of the cable manufacturer's approved pulling lubricants, and the lubricant manufacturer's procedures for use. Design-Builder shall adhere to manufacturer's installation procedures when installing fiber optic cable. Design-Builder shall use lubricants in quantities and in accordance with the procedures recommended by the lubricant manufacturer.

If the cable is pulled by mechanical means, Design-Builder shall obtain the Department’s approval for the cable pulling equipment. Design-Builder shall use pulling cable equipment that has a mechanism to ensure that the maximum allowable pulling tension is not exceeded at any time during installation.

Design-Builder shall furnish attachment hardware, installation guides, and other necessary equipment, not specifically listed herein, as necessary to install the fiber optic cable.

19.11.3 Communications Distribution Cable Assembly or Fiber Optic Branch Cable

Design-Builder shall provide and install a Communications Distribution Cable Assembly (CDCA) or Fiber Optic Branch Cable, ITS Drop Cable, or equivalent, with an epoxy filled patch panel with 12 fiber-optic Lucent Connectors (LCs) as approved by the Department. The Fiber Optic Branch Cable shall be used between the fiber optic trunk line and field device cabinet at lengths pre-determined by Design-Builder, with slack of 100 feet in each splice vault and pull box, as well as 20 feet slack neatly coiled in the field cabinet.

The CDCA Drop Cable shall consist of a 12-strand single-mode factory terminated fiber optic cable from the CDCA to the integrated splice enclosure and shall include all required slack.

The CDCA Drop cable shall be designed with an Optical Fiber Nonconductive Riser (OFNR)-rated, all-dielectric cable that is ultraviolet-resistant and fully waterproof for outdoor applications. The cable shall have a single 3.0-mm buffer tube containing 12 color-coded fibers.

19.11.4 Fiber Optic Jumper Cable

Design-Builder shall use jumper cables that meet the following requirements:

1. 250-m buffering of each fiber
2. 900-m buffering of each fiber applied after the initial 250-m buffering
3. Maximum factory measured insertion loss of 0.5 dB per EIA/TIA 455-171
4. Less than 0.2 dB loss when subjected to EIA/TIA-455-1B, 300 cycles, 0.5 kg
5. Aramid yarn strength member
6. Rugged 3-mm PVC sheathing

7. Minimum bend radius of 320 mm following installation, 640 mm during installation
8. Minimum tensile strength of 444 N
9. LC Connectors factory terminated with strain relief
10. Comply with NEC requirements for indoor cable when used indoors
11. Rated by the manufacturer for use in outdoor field cabinets

Design-Builder shall use duplex jumper cables. Permanent markings shall be provided on duplex jumper cables that provide a visual distinction between the two fibers. Jumper cables shall include strain relief at both ends and elsewhere as needed. Design-Builder shall adhere to manufacturer recommended installation and minimum bend radius requirements.

19.11.5 Connectors

Design-Builder shall use cables with LCs for terminating fiber-optic cables at field cabinets and other outdoor locations.

Design-Builder shall use connectors that are specifically designed for terminating single-mode fiber with 125 µm cladding. Connectors shall be Ultra Physical Contact (UPC) polish connectors. Connectors shall not exceed an average loss of 0.3 dB and a back reflection of -55dB each inclusive of coupler and test mated test connector (measured at the factory). Design-Builder shall not use connectors with factory-measured reflectance greater than -40 dB from -10°C to +60°C or factory-measured attenuation in excess of 0.5 dB. Design-Builder shall obtain cable from a manufacturer that has a program to periodically tests connectors to demonstrate that the attenuation after 1,000 rematings will not change more than 0.2 dB. Design-Builder shall use connectorized cable with strain relief boots that can withstand an axial pull of 112 N with no physical damage to the connector or performance of the fiber.

All fiber optic jumpers and ports shall have a fiber optic dust caps installed. All jumpers shall have a dust caps for each connector with a lanyard. Design-Builder shall keep protective covers on the ends of connectors at all times until terminated.

19.11.6 Integrated Fiber Optic Splice/Termination Unit

Design-Builder shall use splice units that have the capacity to accommodate a minimum of 144 splices each. Design-Builder shall use cylindrical, butt-end style underground splice closures to protect splices that are housed in pull boxes. Design-Builder shall use corrosion-resistant, watertight splice closures that meet the requirements of GR-771-CORE. Splice closure shall seal, bond, anchor, and provide efficient routing, storage, organization, and protection of fiber optic cable and splices. Splice closure shall provide internal configuration and end cap with a minimum of two express ports for entry and exit of uncut trunk line cable, sufficient number of ports for branch cables to accommodate splicing needs, plus at least two additional spare ports for future branch cable.

Design-Builder shall supply an enclosure that is capable of being installed into the Department's existing fiber optic splice vaults with all required slack.

Design-Builder shall use splice closures that accommodate heat-shrink fusion splice trays in sufficient quantities to perform the required number of splices. Design-Builder shall provide additional capacity in the splice closure to add at least one more splice tray.

Design-Builder shall use splice closures that have a reliable dual seal design with both the cable jackets and core tubes sealed, without the use of water-blocking material. Design-Builder shall use splice closures that can be opened and completely resealed without loss of performance or need for a resealing kit.

Design-Builder shall secure splice closures in pull boxes using the racks and hooks. Design-Builder shall orient the splice closure such that the end cap is at least 6 inches below the opposite end.

The splice closure shall be pressurized with dry nitrogen to the manufacturer's specifications.

19.11.7 Fiber Optic Distribution Equipment

Fiber Optic Patch Panels: Design-Builder shall use fiber optic patch panels that have 12 couplers for LC applications that can be easily installed and removed from the termination housing. Design-Builder shall provide protective covers for all unused couplers.

Splice Trays: Design-Builder shall use splice trays that are designed specifically for housing single-mode fusion splices protected by heat-shrink sleeves, are easy to install and remove, and have provisions for a minimum entry of four buffer tubes.

Rack-Mounted Fiber Optic Splice and Termination Units: Design-Builder shall use fiber optic splice and termination units at hub locations that are properly sized for the required number of splices and terminations and comply with the following minimum requirements:

1. Have provisions for minimum of four fiber optic cable entries.
2. Rack-mount design.
3. Have front and rear doors or removable panels.
4. Have a top, bottom, and four sides that fully enclose the interior and protect the contents from physical damage.
5. Are corrosion-resistant and fabricated from minimum 16-gauge aluminum or equivalent.
6. Have internal provisions for neatly routing and securing buffer tubes, pigtails, and fan-out tubing.

Design-Builder shall use splice and termination units that have feed-through provisions that allow pigtails to be routed from the splice unit to the termination unit internally, and between termination units.

19.11.8 Splicing Method

Design-Builder shall use only fusion splicing for all splices. Each splice shall not exceed 0.05 dB attenuation. Design-Builder shall re-splice any splice found to exceed 0.05 dB attenuation at no additional cost, until this requirement is met.

Design-Builder shall protect each splice in a protective sleeve and secure in the splice tray. Design-Builder shall completely re-coat bare fibers with a protective heat-shrink coating prior to placement in a sleeve or housing and install the heat-shrink coating in such a manner as to protect the fiber from scoring, dirt accumulation, moisture intrusion, and microbending.

Design-Builder shall not deviate from the splice details shown on approved plans without the Department's approval.

1. Full-Cable Splice: Design-Builder shall only perform full-cable splices when connecting new cable to existing cable.

2. Full-Cable Termination: Design-Builder shall perform full-cable terminations at the hub. Design-Builder shall route trunk line cable to the designated equipment rack. Once in the rack, Design-Builder shall route fiber optic cables to the rear of the fiber optic splice unit(s) and secure the fiber optic cable sheath and central member outside of the unit. Design-Builder shall route buffer tubes into the splice unit and use spiral wrap to group and protect buffer tubes. Design-Builder shall plug all entry holes not utilized.

Within the splice unit, Design-Builder shall separate the buffer tubes and route each buffer tube to a splice tray. Design-Builder shall secure buffer tubes in splice trays and splice each fiber of the buffer tube to a corresponding fiber optic pigtail. Design-Builder shall route pigtails from the splice tray to the termination unit and terminate at the patch panel. Design-Builder shall use spiral wrap (or similar approved method) to group and protect the pigtails routed from each splice tray to the corresponding termination unit.

19.11.9 Terminations

Design-Builder shall ensure that the attenuation at each termination (inclusive of two connectors and coupler) does not exceed 0.5 dB. Design-Builder shall keep protective covers on couplers until jumper or pigtails are installed.

19.11.10 Labeling

Design-Builder shall provide labelling in a neat, professional manner using permanent methods and products specifically designed for each label scenario. Design-Builder shall obtain the Department's approval for label method and appearance prior to each label scenario. The fiber optic cable labeling and cabling infrastructures shall comply with TIA-606-B Administrative Standard for Commercial Telecommunications Infrastructure. At a minimum, Design-Builder shall provide the following labelling:

1. Label trunk-line and branch cables at pull boxes, vaults, cabinets, racks, fiber huts, communication shelters and facilities and other points of conduit entry and exit with the appropriate cable identification number and footage. Use permanently marked removable cable sleeves. The permanent labeling shall be readable for a minimum of 20 years.

2. Label both ends of fiber optic jumper cables and pigtails.

3. Sequentially label the jumper cable (front) side of patch panels in a consistent manner throughout the project.

4. All conduit, pull boxes, vaults, and cabinets shall be permanently labeled and uniquely identified.

19.11.11 Cable Management

Design-Builder shall group and neatly tie cables to the sides of racks and pull boxes when applicable. Design-Builder shall coil, tie, and stow slack or excess cable in horizontal or vertical

cable management devices. Design-Builder shall provide strain relief for fiber optic cable, jumper cables, and pigtails.

At hubs, Design-Builder shall horizontally route jumper cables from the front face of the termination unit to either side of the rack and stow jumpers within the horizontal cable rings of the termination unit. Design-Builder shall bundle the jumper cables using spiral wrap, and vertically route them down the side of the rack and through the floor. Beneath the rack, Design-Builder shall group the jumper cables into sub-bundles for each rack destination. Design-Builder shall route sub-bundles beneath the floor to the appropriate equipment rack and up the sides of the rack. Design-Builder shall break out individual jumper cables from the sub-bundles and route them horizontally to the equipment.

No excess cable shall be stored in the ladder tray at any time. All cable traversing the ladder tray and the racks shall be tied in bundles every six (6) inches based on cable type and use. All fiber optic cabling entering the building with excess cable shall use two (2) fiber optic sno-shoes to wrap the excess cable.

19.11.12 Testing Requirements

Fiber-optic testing shall be performed before, during, and after installation as required in Section 19.2 (*Testing*) and include the following test phases:

1. FATs: Design-Builder shall ensure all fiber optic cable, pigtails, jumper cables, and patch panels are tested in the factory to demonstrate compliance with the performance requirements. Submittal of Rural Utilities Service (RUS) certification will satisfy this requirement for the tests that are required by RUS 17555.900. Design-Builder shall submit to the Department certification or test results for all required testing.

2. PITs: Design-Builder shall visually inspect all cable and equipment upon delivery and again prior to installation. Design-Builder shall test any equipment that is found to have visual damage. After delivery and prior to installation, Design-Builder shall test all fiber optic cable to demonstrate compliance with the performance requirements of these specifications and to identify any damage to the cable during shipment. Design-Builder shall submit a copy of the results of the PIT to the Department.

3. SALTs: Prior to testing, Design-Builder shall furnish the Department with a complete original version of TIA/EIA-526-7A. Testing of spare fiber is required. Design-Builder shall identify any unacceptable losses and make corrective actions at no additional cost to the department. Failed splices may be remade and retested for compliance. Design-Builder shall replace any cable in its entirety that is found not compliant to these Technical Provisions. Design-Builder shall perform the following post-installation tests using the procedures of TIA/EIA-526-7A and all standards and procedures invoked therein, subject to the following clarification:

    a. Design-Builder shall conduct power meter tests for each connected fiber path in accordance to Method A.3 of TIA/EIA-526 to demonstrate connectivity in accordance with the fiber assignment tables. Design-Builder shall submit to the Department a test results of each fiber path as required by TIA/EIA-526-7.

        i. Conduct bi-directional power meter test at 1310 nm and 1550 nm for each fiber to measure installed fiber attenuation, demonstrate connectivity, and correct splicing.

ii. The Power meter tests shall be conducted after all splices have been made and all connectors, jumper cables, and pigtails are in place

iii. Each link shall be tested separately from each field cabinet to the respective trunk cable termination panel in the Hub(s) and from field cabinet to field cabinet for fiber links that do not go directly to a hub.

iv. The use of fiber optic jumpers to couple the connectors together in equipment cabinets to create a continuous end to end link shall **not** be permitted

v. A qualified department inspector shall approve the results prior to final approval by the Department

b. Design-Builder shall conduct bi-directional (Optical Time Domain Reflectometer [OTDR]) tests for each fiber path from the hub to all field equipment, inclusive of all jumper cables, pigtails, and patch panels. Design-Builder shall demonstrate that the attenuation for each fiber path, termination, and splice, individually and as a whole, comply with the loss budgets required by these Technical Provisions. Fibers shall be tested at 1,310 nm and 1,550 nm. Mode filter shall be selected as described in EIA/TIA-455-77. Design-Builder shall use test jumpers that meet the requirements of EIA/TIA-455-171. OTDR traces shall be submitted to the Department for approval. Design-Builder shall clearly annotate each event (connector, jumper cable, pigtail, splice, etc.) and identify the measured loss on the traces submitted. OTDR testing shall be conducted in accordance with the NDOT General Provisions for Fiber Optic Cable Installation and Interconnection, Section 8(d).

Design-Builder shall identify each fiber by cable (as it is identified in the field), buffer tube, color, and assignment (Spare, Data 0-4, CCTV 26, etc.) as appropriate. Design-Builder shall include a summary sheet with each Submittal that clearly illustrates length and measured loss versus budgeted loss for each fiber or connected fiber path as appropriate. Design-Builder shall provide calculations and notations for each fiber or fiber path and wavelength that include total loss, measured dB/km loss, the number of connectors/terminations, pigtails, and jumper cables and any anomalies over 0.1 dB. Each fiber shall be initialed by the inspector that the fiber optic strand is equal to or less than the estimated loss. Following completion of all testing, and approval by the Department, Design-Builder shall compile and submit two organized test notebooks that include all required test results, summary tables, OTDR traces, and saved test data.

19.12 Field Hardened Ethernet Switch

Design-Builder shall furnish, install, and test the field hardened Ethernet switch. The Ethernet switch shall consist of an Ethernet switch and any required cables, surge protection, power supplies, connections, mounting hardware, and accessories as needed.

19.12.1 Furnish and Installation Requirement

A layer-two aggregate switch shall be required at the FAST communications hub. Hub equipment shall match field equipment. Switches shall work with existing FAST communications equipment.

Design-Builder shall supply a Field Hardened Ethernet Switch from the following list.

1. Ruggedcom, RS900GP series
2. MOXA with EDS-G512E-4GSFP-T
3. Comtrol, RocketLinx ES8510-XT

In locations in the field that have equipment that require a serial interface, Design-Builder shall supply an Ethernet switch that also includes a serial port.

All switches shall have removable Small Form Factor Pluggables (SFPs). All switches shall be compliant with 802.1x.

The field switch shall be a managed switch.

After successful completion of the Full ITS SAT, the configuration of the switch, including firmware updates, shall be managed by FAST. Hardware maintenance of the switch shall remain the responsibility of Design-Builder during the warranty period.

19.12.2 Testing Requirements

Ethernet switch testing shall be performed as required in Section 19.2 (*Testing*) and include the following test phases:

1. SALTs: Design-Builder shall conduct testing to verify that the Ethernet switch operates correctly after installation but before interconnection with communications equipment. Test shall include powering up the Ethernet switch and allowing it to initialize, boot, and run self-diagnostic tests as defined in the approved test procedures.

2. SSTs: Design-Builder shall conduct testing for each Ethernet Switch location that is installed and interconnected. For a hub Ethernet switch, Design-Builder shall conduct approved SSTs from the operator workstation to verify communications with the switch from the TMC. For field Ethernet switches, Design-Builder shall conduct approved SSTs from the hub to verify communications between the hub and the field switch.

3. SATs: As part of the approved SAT, at least once per week, Design-Builder shall demonstrate that all Ethernet switches function as tested in the SST.

19.13 ITS Cabinets

Design-Builder shall provide traffic actuated controller cabinets which include pull out shelves; lighting; surge protectors, filters, field cabinet termination strip, power distribution, 170E controllers (if required), and installing Department provided firmware and all accessories, labor, testing and incidentals to complete an operational cabinet. Alternating Current (AC) Isolators, Direct Current (DC) Isolators, Switch Packs, identification plate, and other typical accessories are considered incidental to the cabinet.

19.13.1 Furnish and Installation Requirement

Design-Builder shall furnish and install the ITS control cabinets on foundations at all Construction ATM System locations to be turned over to the Department. Design-Builder shall furnish a complete and operating cabinet installation with all cabling and power connections.

Design-Builder shall furnish, install, and test field cabinets that consist of a cabinet, power distribution assembly or wiring, power distribution panel, shelves, and other equipment and accessories as needed. Phone jacks, communication interface panels, and terminal blocks for detector amplifiers and interconnect cable are not required.

All cabinets shall be provided with an integral locking system that utilizes a Corbin No. 2 type lock. Design-Builder shall furnish one key for each cabinet.

Cabinets shall use a removable high-quality, pleated paper filter behind door vents.

Design-Builder shall furnish and install Model 334 cabinets (unless specified otherwise in these Section 19 Technical Provisions) with Housing 1B, Mounting Cage 1, Input File I, Input File J, Input Panel #3, Power Distribution Assembly #3, C1 Harness #2, and Service Panel #1, as described in *Transportation Electrical Equipment Specifications (TEES)*, published by Caltrans, except as modified by the following:

1. Cabinets shall meet the general requirements of Subsection 623.02.24 of the Standard Specifications that are suited for detector and ramp stations controlled by a 170E controller and a fiber optic communication interface.

2. Cabinets shall include a top-mounted fan for ventilation.

3. Cabinets shall include pull out shelves.

4. Cabinets shall include two fluorescent lights, one above each door, that are activated when the door is opened and deactivated when the door is closed.

5. Model 208 monitor units shall not be required for cabinets with Model 170E controllers that are dedicated to detection only, and do not control ramp meters. The Model 208 monitor shall be supplied at all Ramp Meter locations.

19.13.2 Additional Cabinet Equipment

Design-Builder shall furnish and install a power distribution panel with main breaker, two terminal blocks, a ground bus, and a neutral bus. Design-Builder shall furnish and install mounting brackets and securely mount the power distribution panel.

Design-Builder shall furnish and install trip free circuit breakers that are approved and listed by Underwriters Laboratory (UL) and plainly marked with the trip and frame size. Breakers that have silver alloy contacts and are quick make, quick break on either manual or automatic operation shall be used. Breakers shall provide a minimum interrupting capacity of 5,000 amperes Root Mean Square (RMS). For multi pole circuit breakers, the common trip type shall be used.

Appropriately sized adapter lugs shall be used to interface large conductor sizes to the circuit breakers.

19.13.3 Testing Requirements

ITS Cabinet testing shall be performed as required in Section 19.2 (*Testing*) and include the following test phases:

- SALTs: Design-Builder shall demonstrate that the fans and door-activated lights function properly.

19.14 Conduit

Design-Builder shall provide a complete conduit system, including all associated conduit, cables, junction boxes, pull boxes, cable vaults, and accessories. Design-Builder may use existing conduit where available, but the use of the existing conduit shall not damage or crowd any new fiber optic cabling. Main conduits shall be located near the Project ROW line to minimize opportunities for damage and to provide flexibility for possible future widening.

Design-Builder shall use four 1¼-inch color-coded SDR 11 High-Density Polyethylene (HDPE) conduits for communications and one 3-inch gray PVC or HDPE conduits for power with pull boxes spaced at approximately 500 feet. Conduit colors shall be white, black, orange, and blue for mainline communication. Design-Builder shall install all communications cables within the conduit system. Direct-buried or exposed cables will not be permitted. Design-Builder shall use locking and buried breakout boxes at several points along the path of each fiber-optic run.

All fiber optic conduit shall be permanently labeled with the conduit name at points of entry and exit. All conduit shall be identified in the as-built. The conduit shall comply with TIA-606-B Administrative Standard for Commercial Telecommunications Infrastructure. The permanent labeling shall be readable for a minimum of 20 years.

Detectable mule tape shall be installed in all fiber-optic conduits. The detectable mule tape shall be attached to the plug on each conduit end and run continuous, allowing for the detectable feature of the tape to function between all number 9 pull boxes.

19.15 Pull Boxes

Pull boxes shall not be placed in the travel lanes or auxiliary lanes. Existing pull boxes, located within the travel lanes of mainline, ramps, or auxiliary lanes (existing or new) shall be relocated by Design-Builder outside of the travel lanes including mainline, ramps, or auxiliary lanes.

Pull boxes shall not be placed in paved areas without prior Department approval.

Pull boxes placed in paved areas shall have traffic rated lids; however, traffic rated lids shall not be installed on pull boxes that are outside of paved areas.

Pull boxes shall be used for intermediate pull points where cable vaults are not needed. No splices shall be allowed in pull boxes.

Except for pull boxes placed in paved areas, all pull boxes shall be buried. A 3M locator ball shall be installed in all pull boxes and GPS located.

At a minimum, Design-Builder shall place cable vaults at each end of the Project and at each hub location. Cable vaults shall be used as pull points, at splice locations, and where there are major changes in mainline conduit direction. Cable vaults shall be located with consideration for accessibility, including access along arterial routes. A cable vault shall be placed at each ITS cabinet.

Cable vaults shall not be placed within paved areas without prior Department approval. Design-Builder shall specify the recommend spacing between cable vaults. The maximum spacing for pull boxes or cable vaults in a mainline conduit run is 500 feet.

Design-Builder shall select cable vault size that meet the applicable NEC and NESC requirements. For the Construction ATM System, Design-Builder shall use Number 9 pull boxes as splice vaults, and number 7 pull boxes for all other pull boxes.

All pull boxes shall be permanently labeled and uniquely identified in the as-builts. The pull box / vault shall comply with TIA-606-B Administrative Standard for Commercial Telecommunications Infrastructure. The permanent labeling shall be readable for a minimum of 20 years.

19.16 Bonding and Grounding

Design-Builder shall comply with the subsection of the Department's Standard Specifications for bonding and grounding and:

- Connect the grounding conductors or bonding jumpers by exothermic welding, listed pressure connectors, listed clamps, or other listed means. Design-Builder shall not use connection devices, including sheet metal screws, or fittings that depend solely on solder, to connect grounding conductors to enclosures.

All grounding in conduits, pull boxes, vaults, fiber huts, communications sites and facilities shall comply with TIA-607-C Commercial Building Grounding (Earthing) and Bonding Requirements for Telecommunications.

Electrolytic grounding may be used in lieu of ground electrodes for the cabinet grounding system. Use electrolytic grounding systems that are 100-percent self-activating, sealed and maintenance free. Provide an electrolytic ground system that hydroscopically extracts moisture from the air to activate the electrolytic process without addition of chemicals or water. Do not use any Hazardous Material to improve the grounding performance of the electrolytic ground. Provide an UL-listed electrolytic system with a minimum life expectancy of 30 years.

Design-Builder shall bond and ground underground electrical services and meter pedestals in accordance with the requirements set forth in Subsection 623.02.22 of the Standard Specifications for service equipment.

All pull boxes shall be grounded.

On new and existing footings, Design-Builder shall verify the resistance to ground of the cabinet grounding system is 5 ohms or less using the three-terminal fall of potential method. If the tested resistance is greater than 5 ohms, Design-Builder shall install as many ground electrodes as is necessary to meet the requirement.

Design-Builder shall mount a terminal block to the cabinet rack for surge protection and shall bond the surge protection terminal block directly to the cabinet ground using a #8 American Wire Gauge (AWG) copper ground wire.

19.17 Power Distribution

19.17.1 Electrical Interfaces and Distribution

Design-Builder shall provide all electrical power connections to all provided ITS components from electrical service points along the roadway. All new electrical services shall comply with the

requirements in Section 18 (*Utilities*). Design-Builder shall interface all ITS equipment to 120 VAC single phase or 240 VAC three-phase to the fullest extent possible.

Design-Builder shall conduct a power-loading analysis that shows end-to-end power consumption for each offered equipment item.

Design-Builder shall submit single-line electrical drawings and power distribution diagrams for each connected ITS component. Additionally, Design-Builder shall submit power line drawings that reflect connectivity from the commercial power source to each ITS cabinet's Power Distribution Panel (PDP), and then single-line drawings from the PDP to each connected ITS component.

19.17.2 General Electrical Specifications

All electrical wiring shall be gauged based on NEC codes and standards (latest versions).

All power runs shall be in 3-inch SDR 40 PVC of HDPE conduit with pull boxes spaced at 500 feet. Conduit shall be gray.

All electrical work shall be done according to current NEC codes and standards (latest versions).

19.17.3 Power Distribution

Design-Builder shall connect all ITS components to the commercial power source. Electrical metering and service entrance shall be accessible by the local utility company.

ITS infrastructure service pedestals can be used to service freeway lighting (mainline, ramps, collector-distributor roads, signs, underdeck) as long as the total load does not exceed 60 percent of the available power. Design-Builder shall maintain at least a 1,000-foot spacing between consecutive service pedestals servicing freeway lighting, ITS infrastructure, landscape irrigation and aesthetic lighting. Requests to install meter groups at common locations shall be approved on a case by case basis.

Design-Builder shall provide an isolation transformer with a separate circuit breaker enclosed in a NEMA-type enclosure. This transformer shall be connected to the PDP by Design-Builder. If space allows, the isolation transformer may be installed in the outdoor cabinet as long as there remains adequate space for equipment and the installation meets code.

Design-Builder shall supply and install surge suppressors on each installed electrical line. These suppressors shall be provided and installed as line protection in parallel with the breaker panel.

Each breaker panel (both main and branch breakers) shall be adequately sized based on the ITS components connected. Design-Builder shall design the breaker panel for ease of operation by maintenance staff including adequate main and branch breakers. The breaker panel shall be designed and sized for an additional 20-percent equipment growth.

Design-Builder shall provide an electric panel schedule subject to Department approval detailing the description, layout, and quantity of circuit breakers.

19.17.4 Testing

All power installations and equipment shall be tested at several intervals as outlined below to ensure Design-Builder's offerings meet the requirements in this specification.

The following test types shall be employed to certify Design-Builder's design meets the requirements in this specification. Design-Builder shall submit testing procedures to the Department for approval, conduct tests in the presence of the Department using approved test procedures, and submit test results to the Department. If the equipment or systems fail any part of the test, then Design-Builder shall make necessary corrections and repeat that test. The intervals for testing are as follows:

1. DATs: The Department shall evaluate Design-Builder's power consumption analysis. Approval of this constitutes passing of the DAT.

2. PITs: Design-Builder and Department representatives shall evaluate that each installed equipment item is ready to receive power. Design-Builder and Department representatives shall visually inspect all facilities and equipment items including cabling prior to installation.

3. Post-Installation Testing: At a minimum, the following post-installation tests shall be conducted:

    a. Design-Builder and the Department shall evaluate power installations by verifying connectivity, measuring voltages, and power consumption at each connected equipment item.

    b. Design-Builder shall perform a ground verification test as part of the post-installation testing. Resistivity to the ground ring, ground points within the ground grid, and every point along the ground path shall be tested.

Design-Builder shall complete and submit approved test data forms containing all of the data taken as well as quantitative results for each test for review and approval. The test data forms will be the basis for rejection or acceptance of the required test.

19.18 Submittals

19.18.1 Early Construction ATM Submittals

Design-Builder shall submit the following to enable ordering of structural materials and DMS for the Construction ATM System prior to NTP2:

- Layout plans defining the location for all Construction ATM gantries and any other ITS equipment required to provide a fully operational Construction ATM System. (submittal type: for review and comment)

- Line-of-sight analysis for ATM DMS and CCTV for the Construction ATM System. (submittal type: for review and comment)

- Structural detail plans for the ATM gantries and ITS equipment poles for the Construction ATM System. (submittal type: for approval)

- Product data submittals (shop drawings) for the DMS and DMS controllers to be used in the Construction ATM System. (submittal type: for approval) Vendor qualifications for each

product vendor shall be submitted as a supplement to the product data submittals for review and comment by the Department.

19.18.2 Stage 1 Design

Design-Builder shall submit the following for the Construction ATM System

- Product data submittals (shop drawings) not previously submitted for all equipment to be installed as part of the Construction ATM System, including CCTV, flow detectors, controller cabinets, Ethernet switches, cables, connections, mounting provisions, and any other appurtenances required to make the system operational. Warranty information shall be provided for all equipment that will be turned over to the Department upon system acceptance. (submittal type: for approval) Vendor qualifications for each product vendor shall be submitted as a supplement to the product data submittals for review and comment by the Department.

- Structural plans for all structures and foundations for ITS equipment, including incorporation of comments on structural plans previously submitted as part of Early Construction ATM Submittals. (submittal type: for approval)

- Mounting details for all equipment to be installed as part of the Construction ATM System. (submittal type: for review and comment)

Design-Builder shall submit the following for the Full ITS System:

- ITS layout plans defining the location for all ITS devices, including ATM gantries, DMSs (Type 1 and Type 5), flow detectors, CCTV, ramp meters, count stations, fiber optic backbones, power and communications conduits, pull boxes, splice vaults, and electric utility service points. ITS Layout Plans shall include line-of-sight analysis for DMS and CCTV. (submittal type: for review and comment)

- Updates to the Nevada Statewide ITS architecture, and the Southern Nevada Regional ITS Architecture (submittal type: for approval)

- Updates to the FAST Basis of Design Document (submittal type: for approval)

- End-to-End Link Budget for fiber installed as part of the Construction ATM System. (submittal type: for review and comment)

- Communications line diagram for equipment installed as part of the Construction ATM System. (submittal type: for approval)

- Fiber splice plans for fiber optic cable installed as part of the Construction ATM System. (submittal type: for approval)

- Power diagram for electric service and equipment installed as part of the Construction ATM System. (submittal type: for review and comment)

- Power loading analysis for electric service installed as part of the Construction ATM System. (submittal type: for review and comment)

- Electric panel schedules for cabinets installed as part of the Construction ATM System. (submittal type: for approval)

- Maintenance Plan for ITS/ATM maintenance during construction and the warranty period. (submittal type: for approval)

19.18.3 Stage 2 Design

Design-Builder shall submit the following for the Construction ATM System:

- Release for Construction structural plans for all structures and foundations for ITS equipment, including incorporation of comments on structural plans previously submitted as part of Stage 1 Submittals for the Construction ATM System. (submittal type: for approval)

- Release for Construction mounting details for all equipment including incorporation of comments on details previously submitted as part of Stage 1 Submittal for the Construction ATM System. (submittal type: for review and comment)

Design-Builder shall submit the following for the Full ITS System:

- ITS Layout plans defining the device locations incorporating comments from Stage 1 Submittal. (submittal type: for review and comment)

- Product data Submittals (shop drawings) and catalogue cuts for all equipment to be installed as part of the Full ITS System that was not previously submitted as part of Stage 1 Submittal for the Construction ATM System, including but not limited to count station and ramp metering equipment. (submittal type: for approval)

- End-to-end link budget for the fiber system of the Full ITS System. (submittal type: for review and comment)

- Communications line diagram for the Full ITS System. (submittal type: for approval)

- Fiber splice plans for the Full ITS System. (submittal type: for approval)

- Power diagram for electric service and ITS equipment for the Full ITS System. (submittal type: for review and comment)

- Power loading analysis for electric service for the Full ITS System. (submittal type: for review and comment)

- Electric panel schedules for all cabinets for the Full ITS System. (submittal type: for approval)

19.18.4 Released-for-Construction

Design-Builder shall submit the following for the Full ITS System:

- Updated ITS device location plans incorporating comments from Stage 2 Submittal. (submittal type: for review and comment)

- Updated structural plans incorporating comments from Stage 2 Submittal. (submittal type: for approval)

- Updated mounting details incorporating comments from Stage 2 Submittal. (submittal type: for review and comment)

- Updated Communications Line Diagram incorporating comments from Stage 2 Submittal. (submittal type: for approval)
- Updated Fiber Splice Plans incorporating comments from Stage 2 Submittal. (submittal type: for approval)
- Updated power diagram incorporating comments from Stage 2 Submittal. (submittal type: for review and comment)
- Updated Electrical Panel Schedules incorporating comments from Stage 2 Submittal. (submittal type: for approval)

19.18.5 Testing Submittals

All testing Submittals except the Testing Program Plan shall be submitted in accordance with the planned testing schedule included in the approved Testing Program Plan.

Design-Builder shall submit:

- Testing Program Plan within 45 days of NTP1
- For ATM:
  a. Construction ATM System Acceptance Test Plan (submittal type: for approval)
  b. Construction ATM System Acceptance Test Results (submittal type: for approval)
  c. Full ATM System Acceptance Test Plan (submittal type: for approval)
  d. Full ATM System Acceptance Test Results (submittal type: for approval)
- For DMSs:
  a. Factory Acceptance Test Plan (submittal type: for approval)
  b. Factory Acceptance Test Results (submittal type: for approval)
  c. Pre-Installation Test Plan (submittal type: for approval)
  d. Pre-Installation Test Results (submittal type: for approval)
  e. Standalone Test Plan (submittal type: for approval)
  f. Standalone Test Results (submittal type: for approval)
  g. Subsystem Test Plan (submittal type: for approval)
  h. Subsystem Test Results (submittal type: for approval)
- For Flow Detector Systems:
  a. Standalone Test Plan (submittal type: for approval)
  b. Standalone Test Results (submittal type: for approval)
  c. Subsystem Test Plan (submittal type: for approval)
  d. Subsystem Test Results (submittal type: for approval)

- For Closed Circuit Television:
  a. Factory Acceptance Test Plan (submittal type: for approval)
  b. Factory Acceptance Test Results (submittal type: for approval)
  c. Standalone Test Plan (submittal type: for approval)
  d. Standalone Test Results (submittal type: for approval)
  e. Subsystem Test Plan (submittal type: for approval)
  f. Subsystem Test Results (submittal type: for approval)
- For Ramp Meters:
  a. Standalone Test Plan (submittal type: for approval)
  b. Standalone Test Results (submittal type: for approval)
  c. Subsystem Test Plan (submittal type: for approval)
  d. Subsystem Test Results (submittal type: for approval)
- For Fiber Optic Communications:
  a. Factory Acceptance Test Plan (submittal type: for approval)
  b. Factory Acceptance Test Results (submittal type: for approval)
  c. Pre-Installation Test Plan (submittal type: for approval)
  d. Pre-Installation Test Results (submittal type: for approval)
  e. Standalone Test Plan (submittal type: for approval)
  f. Standalone Test Results (submittal type: for approval)
- For Field Hardened Ethernet Switches
  a. Standalone Test Plan (submittal type: for approval)
  b. Standalone Test Results (submittal type: for approval)
  c. Subsystem Test Plan (submittal type: for approval)
  d. Subsystem Test Results (submittal type: for approval)
- For ITS Cabinets:
  a. Standalone Test Plan (submittal type: for approval)
  e. Standalone Test Results (submittal type: for approval)
- For Power Distribution:
  a. Pre-Installation Test Plan (submittal type: for approval)
  b. Pre-Installation Test Results (submittal type: for approval)
  c. Post-Installation Test Plan (submittal type: for approval)
  d. Post-Installation Test Results (submittal type: for approval)

- For Full ITS System:
  a. System Acceptance Test Plan (submittal type: for approval)
  b. System Acceptance Test Results (submittal type: for approval)

This page intentionally left blank.

20 MAINTENANCE REQUIREMENTS

Design-Builder is responsible for the maintenance and upkeep of the entire area within the Project ROW, including highways, local roads, bridges, landscape and aesthetic features, and appurtenant facilities. Design-Builder is also responsible for maintenance and upkeep of facilities within those portions of the Site outside of the Project ROW while construction Work is ongoing or while such facilities are being used for MOT related to the Project. Design-Builder shall maintain the facilities in the condition in which they have been constructed, or as close to such condition as is reasonably possible. Design-Builder's maintenance responsibilities include the operation of highway and local roadway facilities and services to provide satisfactory and safe conditions for highway and local roadway traffic and emergency responses as necessary to ensure public safety in all areas open to traffic.

20.1 Maintenance Concept Meeting

Design-Builder shall take an inventory of all the existing maintenance elements and conditions for the Project. Design-Builder shall schedule and participate in a maintenance concept meeting to present a layout of the in-place elements for the Project. Design-Builder shall arrange and hold the maintenance concept meeting no later than 28 days after issuance of NTP1. The outcome of the meeting will finalize the maintenance needs of the Project.

20.2 Maintenance Work Plan

Design-Builder shall prepare a Maintenance Work Plan, including plans for the implementation, coordination, and scheduling of maintenance activities and maintenance inspections for the Project. Design-Builder's Maintenance Work Plan procedures and methods must include the following requirements:

- A preconstruction maintenance survey of the existing conditions within the Project ROW, including the participants reporting to the Department and Local Agencies
- Approach to performing Extra Maintenance Work for existing pavements, existing structures, repair of shoulder drop offs, repair of existing shoulders, maintaining pump stations and other pumps, maintaining fencing, graffiti removal, maintaining lighting, maintaining TMS and landscape and aesthetics.
- Post-construction maintenance survey to be performed as a part of Final Acceptance
- Approach to implementation and relief of maintenance for this Work
- Quarterly reports to be provided to the Department describing status of maintenance activities performed, including status of Extra Maintenance Work, and maintenance inspections accomplished.

Design-Builder shall submit the Maintenance Work Plan, with the preconstruction maintenance survey, to the Department for approval within 56 days after issuance of NTP1. Design-Builder shall not commence construction until the Maintenance Work Plan is approved by the Department and Local Agencies.

20.3 Scope and Schedule of Maintenance

Design-Builder shall maintain both the areas/facilities under construction and the areas/facilities open to traffic, including existing facilities, and perform all maintenance Work normally performed by the Department for such facilities. The Department has reserved the right to enter the Project ROW at any time to perform any Work necessary to maintain the facility and keep the facility open to the public, in their sole discretion. Design-Builder must cooperate with the Department and Local Agencies on all maintenance issues and coordinate with any Department and Local Agencies maintenance staff working within the Project ROW.

Design-Builder's responsibility for maintenance of the area within the Project ROW commences after issuance of an encroachment permit by the Department and approval of the Maintenance Work Plan as described in Section 20.2 above and other conditions set forth in the Contract Documents. Design-Builder's responsibility for maintenance of facilities in other areas commences on start of construction affecting such areas. Design-Builder's maintenance responsibility ends for each facility or Segment on the earlier of the date of Final Acceptance or the date that the facility or Segment is accepted by the Department or Local Agencies for maintenance in accordance with Contract Section 10.2.2.

Design-Builder shall perform those maintenance activities specified in Table 20-1 below. Design-Builder's maintenance must comply with Department and Local Agencies maintenance requirements. If conditions arise requiring maintenance Work that is not included as part of the Work, Design-Builder shall promptly notify the Department of such conditions so that appropriate corrective action may occur.

Based on the accepted Maintenance Work Plan, the Department will direct Design-Builder to perform Extra Maintenance Work in accordance with TP Section 20.5.

Should Design-Builder fail to perform any of the required Project maintenance activities, the Department reserves the right to perform such Work at Design-Builder's expense.

Table 20-1 identifies certain maintenance activities to be performed by Design-Builder. Table 20-1 is not intended to be an all-inclusive description of maintenance activities required to be performed by the Design-Builder under the Contract Documents. Furthermore, various provisions of the Contract Documents contain requirements applicable to Design-Builder's maintenance activities, and the encroachment permit for the Project will also include specific requirements. For example, Design-Builder is required to maintain existing pavement delineation within the Project ROW that has not been installed by Design-Builder, is open to traffic, and was maintained by the Department prior to the issuance of the Department encroachment permit. Maintain temporary pavement delineation installed by Design-Builder.

20.4 Special Requirements for the City of Las Vegas

Design-Builder shall exercise care when any Work occurs in the City of Las Vegas. Design-Builder shall comply with the requirements of the City of Las Vegas Department of Public Works for responsibility for maintenance of the City of Las Vegas facilities within the Project ROW and approval of the Maintenance Work Plan as described above and other conditions set forth in the Contract Documents. Design-Builder's responsibility for maintenance of City of Las Vegas facilities commences on start of construction affecting such City of Las Vegas facilities. Design-Builder's maintenance responsibility ends for each City of Las Vegas facility on the earlier of the

date of Final Acceptance or the date that the City of Las Vegas facility is accepted by the Department or Local Agencies for maintenance in accordance with Contract Section 10.2.2.

20.5 L&A Maintenance Work

Design-Builder shall maintain the Department's Project Infrastructure L&A elements through the maintenance and establishment period including but not limited to the following items:

Vegetated Area

- Maintain plantings by performing activities including, but not limited to, pruning, fertilizing, controlling insects and weeds, and replacing dead or dying plant materials.
- Maintain clear zone, including 5 feet beyond guardrail, to be free of vegetation (measuring a height of 12 inches or more).
- Maintain sight lines or sight distance to signs.
- Remove undesirable trees and vegetation, replace dead or dying plant materials to fill gaps in intended plant screens or patterns.
- Remove vegetated obstruction of drainage channels.
- Maintain groundplane grading for water-harvesting features.
- Maintain noxious weed control.
- Water existing and proposed plantings sufficiently using existing, temporary, or permanent irrigation systems so that plants are provided water during all phases of the Project.
- Control erosion; replace mulch and repair eroded areas as needed.

Irrigation Systems

- Inspect, adjust, schedule, repair, and maintain existing and new irrigation systems.

Aesthetic Elements

- Maintain, inspect, repair, and replace aesthetic elements.
- Maintain the continuity of the corridor aesthetic materials, colors, patterns, and elements.
- Maintain rock mulch, decorative rocks, and boulders by separation of size, color, and placement and land graphics.
- Maintain special aesthetic lighting; inspect, clean, repair, and replace burned out lamps, dirty or damaged lenses, damaged poles, junction boxes or broken circuits, corroded, broken, or shorted wires.
- Maintain special wall aesthetics; inspect, clean, repair, and replace sculptural art, textures and color on walls.
- Maintain decorative pavements, walkways, and handrails; inspect, clean, repair, and replace decorative pavements and concreate aesthetic textures and colors such as medians, slope pave and sidewalks.

- Maintain sculptural/artistic elements; inspect, clean, repair, and replace elements such as sculpture, appliques, and decorative freestanding walls and fences.

20.6 Extra Maintenance Work

The Department has the right to direct Design-Builder to perform Extra Maintenance Work at any time as described herein, subject to payment in accordance with Contract Section 12.1.2. Extra Maintenance Work is limited to those items identified as such in Table 20-1, and specifically excludes those items identified in Table 20-1 as being covered by the lump sum Contract Price. Extra Maintenance Work includes those maintenance activities required as the result of events beyond the control of DB-Related Entities, such as repairs and replacements due to crash damages caused by the traveling public due to no fault of any DB-Related Entity. Any repairs or replacements due to events caused by any DB-Related Entity will not be considered Extra Maintenance Work. The cost of repairs and replacements in areas that are not open to traffic is eligible for reimbursement hereunder only to the extent caused by an unusual and unanticipated occurrence that qualifies as a Force Majeure Event.

If Design-Builder determines that Extra Maintenance Work is necessary beyond the Extra Maintenance Work directed as a part of the Maintenance Work Plan, Design-Builder shall notify the Department at least 30 days in advance of the anticipated start date of needed repairs and reflect the anticipated repair Work on the monthly Maintenance Work Plan update. If the Department agrees with Design-Builder's assessment, the Department will direct Design-Builder to perform the Work and will provide compensation in accordance with Contract Section 12.1.2.

If any repair or replacement that fits within the definition of Extra Maintenance Work is covered by insurance required to be provided under the Contract Documents, Department reimbursement will only be made up to the amount of the insurance deductible, with any remaining amounts to be reimbursed directly from insurance proceeds.

20.7 Maintenance Activities

Table 20-1 identifies certain categories of maintenance activities that are included in the lump sum Contract Price and also identifies the different categories of Extra Maintenance Work.

Table 20-1 Maintenance Work and Extra Maintenance Work

Design-Builder's Maintenance Responsibility	Maintenance Work Covered by the Contract Lump Sum (1)	Extra Maintenance Work Covered by Contract Section 12.1.2
Develop and Implement Maintenance Work Plan	x	
Maintain Stormwater Pollution Prevention Measures	x	
Maintain Existing Pavements		x
Maintain Existing Structures		x
Repair Shoulder Drop-offs		x
Replace/Repair Existing Asphalt Shoulders		x
Maintain Delineators and Pavement Marking	x	
Maintain Drainage	x	
Maintain Pumping Stations and Sumps		x
Maintain Other Pumps and Electrical		x
Vegetation Control (2)	x	
Litter Removal, Sweeping, and General Housekeeping (2)	x	
Maintain Existing Fencing (ROW)		x
Lighting Maintenance and Repairs/Replacements		x
Maintain TMS		x
Maintain Landscape and Aesthetic features	x	
Repair/Replace Existing Overhead/Roadside Signs		x
Replace Damaged Guardrail/Barriers (all types, anchors)		x
Repair/Replace Impact Attenuators/Crash Cushions (all types)		x
Graffiti Removal (2)		x
Repair crash damages to permanent structures		x
Repair crash damages to lighting and lighting standards		x
Extraordinary/Emergency Maintenance		x
Cost of repair of damage caused by an unusual and unanticipated occurrence that qualifies as a Force Majeure Event.(3)		x
Maintain Existing landscape and aesthetic features including irrigation that are to remain within the Site (4)	x	

(1) These categories do not cover construction-related maintenance, because construction-related maintenance is deemed to be included with other items of Work and is therefore covered by the Contract Price allocable to such other items of Work.

(2) Activity will be curtailed while Work areas/facilities are under construction and/or not open to public use or view.

(3) Coverage for repair of damage caused by earthquake is subject to the following conditions:

a. Design-Builder's written request for coverage of rebuilding, repairing, restoring, or otherwise remedying the damage to Work caused by the earthquake must be submitted to the Department before performing Work other than emergency Work.

b. Design-Builder shall construe nothing in this section to relieve Design-Builder of the responsibility to protect the Work from damage. Design-Builder bears the entire cost of repairing damage to the Work caused by an earthquake to the extent that the Department determines the damage was due to the failure of Design-

Builder to comply with the requirements of the Contract Documents, take reasonable and adequate measures to protect the Work, or exercise Good Industry Practice in the conduct of the Work.

c. Design-Builder's repair Work shall consist of restoring the in-place construction (for the purposes of this section, erected falsework and formwork is considered in-place construction) to the same level of completion to which the Work had advanced prior to the earthquake. Emergency Work, which the Department determines would have been part of the repair Work if it had not previously been performed, will be considered to be part of the repair Work.

d. Design-Builder shall construe nothing in this section to relieve Design-Builder of full responsibility for the risk of injury, Losses or damage to materials not yet incorporated in the Work and to materials, tools, and equipment (except erected falsework and formwork) used to perform the Work, or to relieve Design-Builder of responsibility under Contract Sections 12 and 18.

e. The cost of repairing damaged Work that was not in compliance with the requirements of the Contract Documents, shall be borne solely by Design-Builder, and those costs will not be reimbursable.

(4) The Department reserves the right to require the Design-Builder to extend plant maintenance activities beyond the Site in the event Design-Builder's operations damage existing irrigation facilities and/or otherwise interrupt flow to, and thereby damage, plantings outside of the Site.

21 ROW ACQUISITION

21.1 Project ROW

The Department shall acquire and provide the Project ROW, subject to Section 6.1.2 of the Contract. Acquisition of Additional Properties and Project-Specific Locations shall be governed by and subject to Section 6.1.3 of the Contract. All agreements, easements, rights-of-entry, and other instruments under which the Department has received or will receive title, rights-of-entry, or rights-of-access on and to lands owned by Governmental Entities are set forth in the RIDs.

Should Design-Builder require Additional Properties, it shall comply with the requirements of Section 6.1.3 of the Contract. In addition to complying with the requirements of the Contract, Design-Builder shall:

1. Obtain a concurring opinion from the Department as to the necessity for said Additional Properties.

2. Be responsible for performing all of the necessary environmental studies, reports, and public involvement activities to comply with the National Environmental Policy Act (NEPA) requirements and obtain any necessary Governmental Approvals, including Environmental Approvals. The content and format of these studies and reports shall comply with the requirements of applicable Government Rules.

3. Be responsible for coordinating with all adverse impacts to Utility Owners caused by Design-Builder's proposed Additional Properties. In addition, Design-Builder shall be responsible for acquiring any Replacement Utility Property Interests.

4. Bear all costs associated with this work, including the costs of relocating displaced businesses or residents pursuant to Section 21.4 (*Residential/Commercial Displacements*).

5. Provide Additional Properties mapping to include station and offset information perpendicular to the "Le" control line of I-15 for every angle point along the additional property limits, including any necessary curve data.

21.2 Monument and Fence Construction

Design-Builder shall design and construct Project ROW and control of access fence, survey monuments, reference monuments, and any other items associated with monuments in accordance with Project Standards.

21.3 Project ROW Acquisition Status

See Attachment 21-1 (*Project ROW Access Dates and Constraints*) for the current Project ROW acquisition status. Attachment 21-1 (*Project ROW Access Dates and Constraints*) will be updated monthly for Design-Builder until acquisition activities are completed**.**

Title reservations, conditions, easements, or encumbrances of record or not of record on any parcel in the Project ROW/Project right-of-entry will be provided to Design-Builder as acquisition activities progress. The Department anticipates acquiring access rights to temporary construction easements for a duration of four (4) years. Access duration to some parcels will be limited to six

(6) months commencing when the property owner is notified by the Department of Design-Builder's intent to access the temporary construction easement. It is anticipated access to the majority of temporary construction easements will be granted after January 6, 2016. Actual access dates and conditions will be noted in individual Public Highway Agreements available in the RIDs.

21.4 Residential/Commercial Displacements

The Department will relocate all residences and businesses located within the Project ROW. Any residential or commercial displacements caused by Additional Properties will be relocated by the Department pursuant to Section 6.1.3 of the Contract. Information is included as part of Attachment 21-1 (*Project ROW Access Dates and Constrain*ts).

21.5 Property Demolition

Design-Builder shall perform demolition of properties within the Site upon receipt of the Project ROW Certification for each parcel from NDOT's Right-of-Way Division.

The Walker Furniture warehouse will remain in place until Design-Builder provides the 30-day notice to begin demolition to the Department.

21.6 Project ROW Access

Construction access to I-15 from Martin L King between Symphony Parkway and Alta Drive is prohibited. Design-Builder will have access to I-15 from Symphony Parkway, Alta Drive or I-15. Design-Builder will restrict use of the contiguous properties on the west side of I-15 from Symphony Parkway to Alta Drive to construction activities only, no batch plants or similar activities are allowed.

Design-Builder shall obtain all necessary permits from the Department, City of Las Vegas and other third parties to perform any Work during the time period between NTP 1 and NTP 2.

22 NOT USED

This page intentionally left blank.

23 NOT USED

This page intentionally left blank.

24 NOT USED

This page intentionally left blank.

25 SUBMITTALS

Design-Builder shall deliver the Submittals listed in Table 25-1. The table describes a number of the Submittals specified in the Technical Provisions, but is not intended to be inclusive of all Submittals required in the Technical Provisions, Project Standards, or other references and guidelines. See the referenced sections for detailed Submittal requirements. Unless otherwise indicated, all Submittals shall be submitted in both electronic format and hardcopy format. Acceptable electronic formats include current versions of Microsoft Word, Microsoft Excel, or Adobe Acrobat (PDF) files, unless otherwise indicated. Drawings shall be submitted electronically in the current versions of the original MicroStation format and in PDF format. Design-Builder shall also submit electronic files for Final Design drawings and Record Drawings converted to AutoCAD format for Local Agency Project Infrastructure.

The timeframes for the review of Submittals are specified in Section 3.2.2 of the Contract, unless noted otherwise.

Table 25-1 Submittals

Submittal Name	Submittal Schedule	Component of PMP (Yes/No)	Technical Provisions Reference Section
Communications Plan	With PMP	Yes	1.5.3, Attachment 01-3
Changes to Project Management Plan (PMP) or components thereof	Within 14 days after occurrence of change	Yes	1.5.3
Project Baseline Schedule	With PMP	Yes	1.6.1.1.1, Attachment 01-4
Project Status Schedule	Monthly by the first Business Day following the seventh day	No	1.6.1.1.2
As-built Schedule	30 days before Final Acceptance	No	1.6.1.1.5
Progress Report	Monthly during the Construction Period. Within 7 days following each month's end	No	1.6.1.1.4 and 1.6.5.2
Time impact analysis	For each change request, submit with Project Status Schedule	No	1.6.1.3
Recovery schedule	When necessary, submit with Project Status Schedule	No	1.6.1.4
Electronic Document Management System (EDMS)	With PMP	No	1.6.2
Qualifications of lead personnel	With PMP	No	1.6.4
Closeout Report	Every 6 months, within 7 days following each 6-month reporting period	No	1.6.5.4
Quality Management System - Quality Manual	With PMP	Yes	Attachment 02-1
Design Quality Management Plan (DQMP)	With PMP as part of QMS	Yes	Attachment 02-2

Table 25-1 Submittals

Submittal Name	Submittal Schedule	Component of PMP (Yes/No)	Technical Provisions Reference Section
Construction Quality Management Plan (CQMP)	With PMP as part of QMS	Yes	Attachment 02-3
Traffic Quality Management Plan (TQMP)	With PMP as part of QMS	Yes	Attachment 02-4
Environmental Quality Management Plan (EQMP)	With PMP as part of QMS	Yes	Attachment 02-5, Section 7.3
Updates to Quality Management System (QMS) or components thereof	Within 30 days of identification of the need for a revision	No	2.1.2
Quality System Procedures	With PMP as part of QMS	Yes	2.2.2.6
Quality Books and Records	Upon request by NDOT	No	2.2.3.4
Monthly QMS Reports	By 15th of each month	No	2.2.3.5
Nonconformance Report	Within 2 Business Days of discovery of the Nonconformance	No	2.2.7.2
Nonconformance Report Tracking System	Within 90 days after Financial Close	No	2.2.7.2.1
Quality Audit Plan	With PMP	Yes	2.2.10.1
Quality Audit Plan Updates	At yearly intervals following QAP submittal	No	2.2.10.1
Quality Audit Reports	Within 14 days after audit completion	No	2.2.10.2
Corrective Action Plan	Within 15 Business Days after the audit closing meeting	No	2.2.8.2
Preventive Action Plan	Within 15 Business Days after the audit closing meeting	No	2.2.8.3
Design Unit Report	Within 45 days after NTP1	No	3.3
Design Review Plan and Schedule	Within 45 days after NTP1, update monthly	No	3.5, 3.7
Stage 1 Design Review Submittal	Upon certification by DQM	No	3.9.1
Stage 2 Design Review Submittal	Upon certification by DQM	No	3.9.2
Released-for-Construction Design Submittal	After receiving Lead Engineer's certification	No	3.9.3
Final Design Review Submittal	When Design and Construction Documents and Design Unit are 100% complete	No	3.9.4
Working Drawings	Prior to construction	No	3.10
Record Drawings	Prior to Final Acceptance	No	3.11
Design Nonconformance Report	When necessary	No	3.12.4
Design Exceptions	No later than Stage 1 Design Review	No	3.13

Table 25-1 Submittals

Submittal Name	Submittal Schedule	Component of PMP (Yes/No)	Technical Provisions Reference Section
Design Workshop records	Within 10 days after the workshop	No	3.16
Construction schedule with quantity	Prior to construction	No	3.17
Design quality review report	Monthly	No	3.18.2
Inspection and Testing Plan	Submit with CQMP	Yes	4.2.2, 4.2.8
Notice of witness points or hold points occurrence	24 hours before test	No	4.2.3
Inspection and test records	Within 1 day of the inspection or test	No	4.2.9
Weekly planned Construction Work activities	Weekly by noon on Friday		4.6
Daily inspection reports	Daily	No	4.7
Weekly testing records	Weekly	No	4.7
Material source information	Within 30 days after NTP2	No	4.8
Identity of fabricator	30 days before delivery to the Project	No	4.8
Certificate of compliance for materials	Prior to Final Acceptance	No	4.8
Revised Preliminary L&A Plan	With PMP	Yes	5.3.1
Mitigation Planting Plan	45 days after NTP1	No	5.3.2
Landscape Design Documents	During each stage of Design Submittals	No	5.3.3
Noxious Weed Control Plan	Prior to NTP2, update annually	No	5.4.4
Plant material health recommendation report	Quarterly from 30 days after NTP2 through Final Acceptance	No	5.4.6
Public Involvement Plan (PIP)	With PMP	Yes	6.3.1
Community Outreach Plan	Submit with PIP	Yes	6.3.1
Public Information Meeting materials	Meeting notices shall be placed 15 days before the meeting, 1 day before the meeting and the day of the meeting. The schedule for other materials will be determined during the project	No	6.3.2
Public notifications	10 days before being sent to public	No	6.3.5
Notice to property owners	7 to 14 days in advance of construction operations	No	6.3.6
Public contact records	Monthly submit with Progress Report	No	6.3.7
Safety Plan	With PMP	Yes	6.3.8, Attachment 01-3

Table 25-1 Submittals

Submittal Name	Submittal Schedule	Component of PMP (Yes/No)	Technical Provisions Reference Section
Project Website	Within 15 days of NTP2	No	6.3.10
Construction progress photos and videos	Monthly	No	6.3.11
Environmental Compliance and Mitigation Plan (ECMP)	Within 30 days after Financial Close	No	7.3.2
Environmental compliance and mitigation training program	Submit with ECMP	Yes	7.3.5
Copy of issued permit and related documentation for Governmental Approvals	When available	No	7.4.1
Nesting surveys report	14 days before land disturbance	No	7.5.1.4
Biologist's CV	14 days before land disturbance	No	7.5.1.4
Traffic Noise and Barrier Analysis Report	Within 90 days after NTP1	No	7.7
Noise Barrier Survey Data	Submit with Stage 1 Design Review but at least 30 days before initiating noise barrier demolition	No	7.7
Hazardous Materials Management Plan (HMMP)	Submit with PMP	Yes	7.8.1
Hydrologic Study	Submit with Drainage Design Report	No	8.3.1
Hydrograph or models for detention facilities	If applicable	No	8.3.10
Stormwater Pollution Prevention Plan (SWPPP)	Before any earth-disturbing activities begin	No	8.4.2.1, 8.4.4
Erosion and Sediment Control Plan (ESCP)	Submit with RFC Design Review	No	8.4.2.1
Drainage Design Report	Submit with Stage 1 Design Review	No	8.5.1
Final Drainage Design Report	Submit with Stage 2 Design Review	No	8.5.2
Dam design submittal	If applicable. Submit with Stage 2 Design Review	No	8.5.2
Final Drainage Report supplement	Submit with RFC Design Review	No	8.5.3
Proposed Change-In-Access report	Submit with RFC Design Review	No	9.3.10
Preliminary design exception requests	Submit with Stage 1 Design Review	No	9.5.1
Future improvement compatibility plans	Submit with Stage 1 Design Review	No	9.5.1

Table 25-1 Submittals

Submittal Name	Submittal Schedule	Component of PMP (Yes/No)	Technical Provisions Reference Section
Road safety audit	Submit with Stage 1, Stage 2 & RFC Design Review	No	9.5.1, 9.5.2, 9.5.3
Plan view, profiles, typical cross-section drawings, and other preliminary design documents	Submit with Stage 1 Design Review	No	9.5.1
Design exception requests	Submit with Stage 2 Design Review	No	9.5.2
Geometric approval request memorandum	Submit with Stage 2 Design Review	No	9.5.2
Design calculations for all proposed and temporary roadways	Submit with Stage 2 Design Review	No	9.5.2
Final Design Exception report	Submit with RFC Design Review	No	9.5.3
Final control of access report	Submit with RFC Design Review	No	9.5.3
Traffic operational analysis	Submit with Stage 1 Design Review	No	11.3
CORSIM and Synchro input and output files	Submit with Stage 1, Stage 2 & RFC Design Review	No	11.4.1, 11.4.2, 11.4.4
Transportation Management Plan (TMP)	Submit at each Design Review Stage	Yes	12.3
Temporary Traffic Control Plan (TTCP)	Submit with TMP	Yes	12.3.1
Lane Closure Request (LCR) Form	Submit at each Design Review Stage	No	12.4.5
Access and mobility plan	Submit with TMP	No	12.5.1
Notice of any construction activity that would affect traffic operations	Table 12-1	No	12.5.2
Daily record of traffic control activities	Within 24 hours	No	12.5.3
Geotechnical Subsurface Exploration Planning Memorandum	Submit with Stage 1 Design Review	No	13.3.1.2
Geotechnical Design Planning Memoranda	Submit with Stage 1 Design Review	No	13.3.2.1
Interim Design Memorandum	Submit with Stage 2 Design Review	No	13.3.3
Subgrade Verification Document	Prior to foundation construction and backfill placement	No	13.4.3.1
Wave Equation Analysis of Piles (WEAP)	30 working days prior to driving piles	No	13.4.3.2
Deep Foundation Testing and Monitoring Programs	30 working days prior to deep foundation construction	No	13.4.3.2

Table 25-1 Submittals

Submittal Name	Submittal Schedule	Component of PMP (Yes/No)	Technical Provisions Reference Section
Qualifications of Drilled Shaft Inspectors, Pile Driving inspectors	30 working days prior to drilled shaft installation or pile driving	No	13.4.3.3, 13.4.3.5
Drilled shaft validation results	Within 14 days after the results are validated by Design-Builder's geotechnical engineer	No	13.4.3.3
Pile driving records	Prior to backfilling	No	13.4.3.4
Proposed resolution for non-compliance pile	Within 14 days after non-compliance is identified	No	13.4.3.5
MSE wall retrofit system design	As necessary	No	13.4.4.1
Source and material properties of all fills	Before the start of fill embankment activity	No	13.4.4.2
Settlement data of embankments	Prior to subsequent construction activities	No	13.4.4.3
Geotechnical instrumentation monitoring plans	Submit with RFC Design Review	No	13.5.3.1
Vibration Monitoring Plan	Submit with RFC Design Review	No	13.5.3.2
Construction instrumentation monitoring reports	Submit with RFC Design Review	No	13.5.3.2
Final Geotechnical Reports	Submit with Final Design Review	No	13.5.4.1
Seismic evaluation and retrofit strategy	Submit with definitive design submittal	No	14.3.2.3
Load rating deliverables	Submit with RFC Design Review	No	14.3.3.3
Bridge demolition plan	Prior to bridge demolition operation	No	14.4.3
Bracing plan	Prior to column construction	No	14.4.4
Thermal Control Plan	Prior to typical concrete pour	No	14.4.6
Falsework calculation	Prior to falsework erection	No	14.4.7
Design Criteria Memo for Structure	With Stage 1 Design Review	No	14.5.1
Definitive Design for Structure	With Stage 1 Design Review	No	14.5.1
Substructure Design Submittal (80%)	With Stage 2 Design Review	No	14.5.2
Superstructure Design (80%)	With Stage 2 Design Review	No	14.5.2
Final sealed calculations	With RFC Design Review	No	14.5.3
Final Geotechnical Report	With RFC Design Review	No	14.5.3
Final specifications and special provisions	With RFC Design Review	No	14.5.3
Sealed check calculations	With RFC Design Review	No	14.5.3

Table 25-1 Submittals

Submittal Name	Submittal Schedule	Component of PMP (Yes/No)	Technical Provisions Reference Section
Sealed bridge load rating report	With RFC Design Review	No	14.5.3
Traffic signal warrant analyses	If necessary, submit with Stage 1 Design Review	No	15.3.1
Preliminary traffic signal Plan	With Stage 1 Design Submittal	No	15.3.2.1, 15.3.2.2
Interconnect plan	Submit with traffic signal plan	No	15.3.2.3
Sightline profiles	Submit with Stage 1 Design Review	No	15.3.2.6
Temporary traffic signal studies	Prior to installation of temporary signals	No	15.3.3
Lighting analyses calculations	Submit with Stage 1 Design Review	No	15.4.1.1
Notice of lighting equipment removal	At least 2 weeks prior to removal	No	15.4.1.1.3
Design lighting roll plan	Submit with Stage 1 Design Review	No	15.4.2
Lighting Removal Plan	Submit with Stage 1 Design Review	No	15.5.1
Design signing roll plan	Submit with Stage 1 Design Review	No	16.3.1.1
Signing Plans	Prior to RFC review	No	16.3.1.2
Pavement marking Plans	Submit with signing plans	No	16.4.1.1
Railroad Submittal Packages	Submit with Design Review	No	17.4.1
Utility Agreements	Prior to Utility Adjustment of the affected utility	No	18.1.6.2.1
Protection Plan for Utility facilities	Submit with Stage 1 design	No	18.1.12
Minutes of Utility Meeting	Within 5 Business Days after meeting	No	18.2.2.2
Correspondence between Design-Builder and Utility Owner	Within 7 days after receiving or sending	No	18.2.23
Design-Builder's Utility Conflict Matrix	Within 120 days after the issuance of NTP1	No	18.3.3
Record Drawings for Utility Adjustment Works	Upon completion of Utility Adjustment	No	18.3.8
Utility Damage Report	Submit Utility Damage Report form prior to the start of construction Any utility damage must be reported immediately and Utility Damage Report form must be submitted within 2 days	No	18.4.7
Utility Adjustment Master Plan	30 days after NTP1, update monthly	No	18.4.8

Table 25-1 Submittals

Submittal Name	Submittal Schedule	Component of PMP (Yes/No)	Technical Provisions Reference Section
Updates to the Nevada Statewide ITS architecture and the Southern Nevada Regional ITS Architecture	Submit with Stage 1 Design Review	No	19.1, 19.18.1
Statement of Vendor Qualifications	Submit with Early Construction ATM Submittals and Stage 1 Design Review	No	19.18.1, 19.18.2
ITS Equipment Warranty Information	Submit with Stage 1 Design Review	No	19.1, 19.18.2
Testing Program Plans	45 days after NTP1	No	19.2, 19.18.5
Test procedures, software and data forms	60 days before the scheduled testing	No	19.2.2, 19.17.4
Test results	Within 3 days of the test	No	19.2.4, 19.17.4
Updates to the FAST Basis of Design Document	Submit with Stage 1 Design Review	No	19.4, 19.18.2
Line-of-sight analysis for ATM DMS and CCTV	Submit with Early Construction ATM and Stage 1 Design Review	No	19.18.1, 19.18.2
Structural Plans for all structures and foundations for early deployment ITS equipment	Submit with Early Construction ATM and Stage 1 Design Review	No	19.18.1, 19.18.2
Label method and appearance	Prior to each label scenario	No	19.11.10
Electric panel schedule	Submit with Stages 1 & 2	No	19.17.3, 19.18.1, 19.18.2
Power Installation test data forms	After power installation at each ITS equipment site	No	19.17.4
ITS layout plans	Submit with Stage 1 & 2 Design Review	No	19.18.2, 19.18.3
Product data submittals (shop drawings)	Submit with Stages 1 & 2 Design Review	No	19.18.2, 19.18.3
End-to-End Link Budget	Submit with Stages 1 & 2 Design Review	No	19.18.2, 19.18.3
Communication Line Diagram	Submit with Stage 1 & 2 Design Review	No	19.18.2, 19.18.3
Fiber splice plans	Submit with Stage 1 & 2 Design Review	No	19.18.2, 19.18.3
Power diagram	Submit with Stage 1, 2 & RFC Design Review	No	19.18.2, 19.18.3, 19.18.4
Power loading analysis	Submit with Stage 1 & 2 Design Review	No	19.18.2, 19.18.3
Updated ITS device location plans	Submit with Stage 2 and RFC Design Review	No	19.18.3, 19.18.4
Updated structural plans	Submit with Stage 2 and RFC Design Review	No	19.18.3, 19.18.4

Table 25-1 Submittals

Submittal Name	Submittal Schedule	Component of PMP (Yes/No)	Technical Provisions Reference Section
Updated mounting details	Submit with RFC Design Review	No	19.18.4
Updated communications line diagram	Submit with RFC Design Review	No	19.18.4
Updated fiber splice plans	Submit with RFC Design Review	No	19.18.4
Updated power diagram	Submit with RFC Design Review	No	19.18.4
Updated Electrical Panel Schedules	Submit with RFC Design Review	No	19.18.4
Maintenance Work Plan	Within 56 days after issuance of NTP1	No	20.2

This page intentionally left blank.

26 STANDARDS AND REFERENCES

Design-Builder shall design and construct the Work in accordance with the relevant requirements of the Project Standards defined in this Section and listed in Table 26-1. In some instances, only specific sections of the referenced standard apply, as specified in these Technical Provisions. Section 1.3.5 of the Contract addresses treatment of irreconcilable conflicts, ambiguities, or inconsistencies among the Project Standards.

Design-Builder shall use the most current version of each listed standard or reference as of the Setting Date unless expressly stated otherwise in Table 26-1 or elsewhere in the Contract Documents.

Any standards, specifications, manuals, and guidelines that are not included within the definition of Project Standards shall be submitted to the Department for review and shall not be used by Design-Builder unless and until they are approved by the Department. Any manuals or documents other than those reflected herein or in the Contract Documents require the Department's prior approval before use in the Work. Design-Builder shall obtain advance prior written approval from the Department for any Deviation from the Project Standards, in addition to complying with any other requirements regarding requested Deviations set forth in the Contract Documents.

Design-Builder shall be responsible for communicating with the applicable Utility Owner(s) to identify the applicable Adjustment Standards for any Utility Adjustment Work.

26.1 Modifications to Department Standards and References

26.1.1 Department's Standard Specifications and Standard Plans

The Department's Standard Specifications and the Department's Standard Plans are subject to the following provisions for Design-Builder's and DB-Related Entities Work that provides for the Department's Project Infrastructure and Locally Operated ITS Facilities.

1. The series 100 sections in Division I of the Department's Standard Specifications shall not apply except as explicitly stated elsewhere in these Technical Provisions.

2. All words such as "should," "may," "must," "might," "could," and "can" shall mean "shall" unless the context requires otherwise, as determined in the sole discretion of the Department. Design-Builder shall disregard qualifying words such as "usually," "normally," and "generally." It shall be in the Department's sole discretion to determine when the context does not require a provision to be mandatory.

3. When a reference to "Engineer" relates to design responsibilities or other technical issues, "the Engineer" shall mean Design-Builder's Lead Engineer. When a reference to "Engineer" relates to administrative issues, "Engineer" shall mean the Department. It shall be in the Department's sole discretion to determine when the context refers to technical or administrative responsibilities.

4. All references related to pay items or quantities, measurement for payment, method of measurement, basis of payment, extra work, contract adjustments, adjustment of unit prices, or similar phrases shall be disregarded by Design-Builder.

5. References to “additional work,” “adjustment to compensation,” “extra work,” “pay extra,” “at the expenses to the Department,” or similar phrases shall be disregarded. Payment for services, more fully described in Section 12 of the Contract, will be full compensation for all Work performed pursuant to the Contract Documents unless specific provisions for additional payments are contained in the Contract Documents.

6. No changes have been made to provisions in any standards that do not apply to this Project, but provide general information (e.g., descriptions of Department divisions and their duties, descriptions of legal authority, or descriptions of internal Department procedures); however, in some cases it may not be clear whether rights or responsibilities are applicable to Design-Builder. If it is unclear whether specific provisions in the standards are applicable to Design-Builder, Design-Builder shall notify the Department and the Department shall make that determination in its sole discretion.

7. Design-Builder shall disregard the paragraphs within the standards relating to questions. All questions shall be taken to the Department.

8. When a standard refers to an action being necessary or needed, Design-Builder shall construe the action as required, unless the context requires otherwise, as determined in the sole discretion of the Department.

9. Phrases relating to items such as activity(ies) that “will be” conducted, that are “most easily accomplished by”, that “are recommended”, that are “desired”, that “is usually necessary”, that “should preferably be” done, that “might require”, that “is necessary” or “as necessary”, that “are” (or “is”) “required” or “done” shall be construed to be mandatory requirements unless the context requires otherwise, as determined in the sole discretion of the Department. Phrases relating to problems with activity(ies) that should not be conducted, such as “is not normally used,” “is not good practice,” “should never be done,” “cannot be used,” or “should be avoided” shall be construed as prohibited. It shall be in the Department’s sole discretion to determine when the context either requires or does not require a provision to be mandatory.

10. Where the notes refer to items that are indicated in the plans or special provisions or required in the plans or special provisions, the plans or special provisions shall mean Design-Builder’s plans or special provisions.

11. References to approved products or materials shall mean such products or materials approved by the Department.

12. All references to Contractor shall mean Design-Builder.

13. References to laboratory facilities shall mean a testing laboratory retained by Design-Builder for QC and QA sampling and testing or by the Department for acceptance sampling and testing, including Department’s headquarters laboratory.

14. Design-Builder shall use forms as required to report the same information and in the same format as the Department’s forms shown in the Department’s *Construction Manual* and *Documentation Manual,* and other applicable Department manuals.

15. References to Department practices and policies shall be construed to be mandatory requirements unless the context requires otherwise. It shall be in the Department's sole discretion to determine when the context does not require a provision to be mandatory.

16. All references to Department offices and personnel shall mean Design-Builder's similar offices and personnel.

17. All references to "you" or "your" shall mean Design-Builder unless otherwise directed by the Department.

18. When a standard refers to items that will be performed or provided by the Department or by a division or employee of the Department, Design-Builder shall construe the requirements as applying to Design-Builder instead unless otherwise specified in the Contract Documents, or unless the context requires otherwise. It shall be in the Department's sole discretion to determine when the context requires otherwise.

26.1.2 Standards, Manuals, and References

Except as expressly provided otherwise in these Technical Provisions, phrases relating to the Department's approval, such as "acceptance," "agree," "approve," "approval," "authorize," "authorization," "consent," "concurrence," and "grant" included in the standards, manuals, and references listed in Table 26-1 shall be deemed to mean "review and comment."

26.2 Modifications to the Department's Standard Specifications

Design-Builder may elect to utilize construction requirements varying from the Department's Standard Specifications to perform Construction Work for the Department's Project Infrastructure as defined in this Section 26.2.

1. The construction requirements specified in Subsections 203.03.01 through 203.03.11 of the Department's Standard Specifications are excluded. Design-Builder shall submit Project Neon – DB Special Provisions as part of the Design Review process defining the Construction Work specific to excavation and embankments, including provisions defined in these Technical Provisions.

2. The construction requirements specified in Subsections 302.03.01 through 302.03.07 of the Department's Standard Specifications are excluded, except as noted in this paragraph. Design-Builder shall submit Project Neon – DB Special Provisions as part of the Design Review process defining the Construction Work specific to compacting aggregate base course, including provisions defined in these Technical Provisions. Design-Builder shall compact aggregate base course in accordance with the provisions contained in Subsection 302.03.06 of the Department's Standard Specifications.

3. The construction requirements specified in Subsections 401.03.01 through 401.03.16 and 402.03.01 through 402.03.06 of the Department's the Standard Specifications are excluded, except as noted in this paragraph. Design-Builder shall submit Project Neon – DB Special Provisions as part of the Design Review process defining the Construction Work specific to proportioning, mixing, handling, placing, compacting, and finishing asphalt concrete, including provisions defined in these Technical Provisions. Design-Builder shall provide asphalt concrete in the completed Construction Work meeting all density, durability, and smoothness requirements. Design-Builder shall compact asphalt

concrete pavements by test sections or control strip and construct joints in accordance with the provisions contained in Subsections 402.03.06 (b) and (c) and 401.03.12, respectively, of the Department's Standard Specifications.

4. The construction requirements specified in Subsections 409.03.02 through 409.03.06 of the Department's Standard Specifications are excluded, except as noted in this paragraph. Design-Builder shall submit Project Neon – DB Special Provisions as part of the Design Review process defining the Construction Work specific to proportioning, mixing, handling, placing, finishing, and curing PCC pavement surfacing, including provisions defined in these Technical Provisions. Design-Builder shall provide concrete pavement in the completed Construction Work meeting all strength, durability, and surface finish requirements. Design-Builder shall perform the Work in accordance with the Department's Standard Specification Subsections 409.03.01 and 409.03.09.

Design-Builder shall submit Project Neon – DB Special Provisions defining the Construction Work that may amend or supplement the Department's Standard Specifications. Design-Builder's Project Neon – DB Special Provisions shall be developed to promote construction products with materials, installation techniques, workmanship, and other elements of construction providing for the functionality and performance of the Construction Work equal to or better than would be furnished under the Department's Standard Specifications. The Department will review, comment, and have discretionary approval of all Project Neon – DB Special Provisions submitted by the Design-Builder.

The Project Neon – DB Special Provisions development, quality, and Design Review process shall be in accordance with Section 2 (*Quality Management System*) and Section 3 (*Design Quality Management*). The Project Neon – DB Special Provisions shall be defined as a specific Design Unit in accordance with Section 3.3 (*Design Units*). Design-Builder shall prepare a complete and compiled set of Special Provisions to perform the Work.

The initial Project Neon – DB Special Provisions shall be submitted as part of the Stage 2 Design Review described in Section 3.9.2 (*Stage 2 Design*).

26.3 City of Las Vegas Standards

Work for the Local Agency Project Infrastructure that is either owned, operated, or maintained by the City of Las Vegas shall be as set forth in this Section 26 complying with the *Uniform Standard Specifications for Public Works Construction Off-Site Improvements, Clark County Area Nevada*, as amended by Attachment 26-2 (*City of Las Vegas Special Provisions)* and the *Uniform Standard Drawings for Public Works Construction, Clark County Area Nevada*, *Hydrologic Criteria and Drainage Design Manual*, *Downtown Centennial Standards*, *Uniform Design and Construction Standards for Potable Water Distribution Systems*, latest edition to the Setting Date and applicable Department Standard Specifications including all amendments, supplements, and applicable Special Provisions; other applicable approved standards issued by the controlling agency; the International Building Code; and all local city codes and ordinances applicable, except as modified in these Technical Provisions.

Section 26.2 (*Modifications to the Department Standard Specifications*) does not apply for the Local Agency Project Infrastructure Work.

Design-Builder's Work in accordance with the *Uniform Standard Specifications for Public Works Construction Off-Site Improvements, Clark County Area Nevada*, and the *Uniform Standard*

Drawings for Public Works Construction, Clark County Area Nevada are subject to the provisions similar in content as described in Section 26.1 (*Modifications to Department Standards and References*).

26.4 Miscellaneous Specifications and Standards

Work for third-parties Local Agency Project Infrastructure shall be as set forth in this Section 26 complying with applicable approved standards and specifications issued by the controlling third party; the International Building Code; and all local city codes and ordinances applicable, except as modified in these Technical Provisions.

26.5 Project Neon-DB Standard Drawings

Design-Builder may elect to submit new, supplemented or revised drawings amending the Department's Standard Plans, which show frequently recurring components of Work that, have been standardized for use for the Department's Project Infrastructure. These standard drawing Design Documents prepared by Design-Builder, shall be developed to promote construction products who's dimensions, materials, fabrication techniques, and other elements of construction products such that provides for the functionality and performance of the Construction Work is equal to or better than would be furnished under the Department's Standard Plans. These plans or drawings shall be titled Project Neon-DB Standard Drawings and developed based on the following:

1. The Project Neon-DB Standard Drawings shall be prepared in accordance with these Technical Provisions and the Contract Documents.

2. The content and organization of the plans or drawings at a minimum shall follow the format and include all details such as dimensions, leaders, notes, calculations, and other items following Good Industry Practice and as presented as are included in the Department's Standard Plans, as applicable.

3. Any use by Design-Builder of the Department's Standard Plans in developing the Project Neon-DB Standard Drawings shall be subject to Section 1.9.2 of the Contract. The electronic versions of the Department's Standard Plans will be provided as part of the RIDs.

4. If Design-Builder elects to use the Department's Standard Plans provided as part of the RIDs, all new, amended, or supplemented drawings shall be provided in a format to allow the Department's review of the proposed methods differing from the Department's Standard Plans. For example, the Project Neon-DB Standard Drawings manual may be provided with proposed changes clouded in a typical drawing revision method.

5. Design-Builder shall provide a table listing of all proposed Project Neon-DB Standard Drawings, including the name and the application. To aid in the Department's review, Design-Builder shall indicate if the drawing is: 1) is an existing Department Standard Plan; 2) is another public agency drawing, including the name of the agency; or 3) indicates if a change is proposed to the drawing.

26.5.1 Standard Drawing Development and Reviews

The standard drawing development, quality, and Design Review process shall be in accordance with Section 2 (*Quality Management System*) and Section 3 (*Design Quality Management*). The Project Neon-DB Standard Drawings shall be defined as a specific Design Unit in accordance with Section 3.3 (*Design Units*). Design-Builder shall prepare a complete and compiled set of standard drawings to perform the Work.

The initial Project Neon-DB Standard Drawings shall be submitted as part of the Stage 1 Design Review described in Section 3.9.1 (*Stage 1 Design*).

Table 26-1 Standards and References

Author/ Agency	Title
AASHTO	*AASHTO LRFD Bridge Design Specifications,* 7th Edition (American Association of State Highway and Transportation Officials; Washington, DC; 2014)
AASHTO	*AASHTO LRFD Bridge Construction Specifications,* 3rd Edition (American Association of State Highway and Transportation Officials; Washington, DC; 2010, with 2011 and 2012 Interim Revisions)
AASHTO	*A Guide for Achieving Flexibility in Highway Design,* 1st Edition (American Association of State Highway and Transportation Officials; Washington, DC; 2004)
AASHTO	*A Guide for the Development of Bicycle Facilities,* 4th Edition (American Association of State Highway and Transportation Officials; Washington, DC; 2012)
AASHTO	*A Guide for the Planning, Design, and Operation of Pedestrian Facilities,* 1st Edition (American Association of State Highway and Transportation Officials; Washington, DC; 2004)
AASHTO	*A Guide for Transportation Landscape and Environmental Design*, 2nd Edition (American Association of State Highway and Transportation Officials; Washington, DC; June 1991)
AASHTO	*A Policy on Geometric Design of Highways and Streets* (commonly known as the "Green Book") (American Association of State Highway and Transportation Officials; Washington, DC; 2011)
AASHTO	*Highway Drainage Guidelines,* 4th Edition (American Association of State Highway and Transportation Officials; Washington, DC; 2007)
AASHTO	*Guide Specifications for Design and Construction of Segmental Concrete Bridges*, 2nd Edition (American Association of State Highway and Transportation Officials; Washington, DC; 2003)

Table 26-1 Standards and References

Author/ Agency	Title
AASHTO	*Manual for Assessing Safety Hardware*, 1st Edition (American Association of State Highway and Transportation Officials; Washington, DC; 2009)
AASHTO	*Manual for Bridge Evaluation*, 2nd Edition (American Association of State Highway and Transportation Officials; Washington, DC; 2011, with 2011, 2013, and 2014 Interim Revisions)
AASHTO	*Policy on Design Standards – Interstate System*, 5th Edition (American Association of State Highway and Transportation Officials; Washington, DC; 2005)
AASHTO	*Roadside Design Guide,* 4th Edition (American Association of State Highway and Transportation Officials; Washington, DC; 2011)
AASHTO	*Roadway Lighting Design Guide* (American Association of State Highway and Transportation Officials; Washington, DC; 2005)
AASHTO	*Standard Specifications for Highway Bridges*, 17th Edition (American Association of State Highway and Transportation Officials; Washington, DC; 2002)
AASHTO	*Guide Specifications for Structural Design of Sound Barriers* (American Association of State Highway and Transportation Officials; Washington, DC; 2002)
AASHTO	*Standard Specifications for Structural Supports for Highway Signs, Luminaires, and Traffic Signals*, 6th Edition (American Association of State Highway and Transportation Officials; Washington, DC; 2013)
AASHTO/ITE/ NEMA	*National Transportation Communication for ITS Protocol (NTCIP)*
ANSI	*American Standard for Nursery Stock*, ANSI Z60.1 (American Nursery & Landscape Association [ANLA]; Washington, DC; May 12, 2004)
ANSI	*Bridge Welding Code,* AASHTO/AWS D1.5M/D1.5 (American National Standards Institute [ANSI]; 2010)
ANSI	*Guide to the Preparation of Operational Concept Documents,* ANSI/AIAA G-043A-2012e (The American Institute of Aeronautics and Astronautics [AIAA]; July 2012)
ANSI	*American National Standard for Tree Care Operations – Tree, Shrub and Other Woody Plant Maintenance – Standard Practices (Pruning)* ANSI A300 (Part 1) (National Arborist Association, Inc.; May 22, 2001)

Table 26-1 Standards and References

Author/ Agency	Title
ANSI	*American National Standard for Arboricultural Operations—Safety Requirements*, ANSI Z133.1 (International Society of Arboriculture [ISA]; 2012)
AREMA	*Manual for Railway Engineering, Volume 1: Track, Volume 2: Structures, Volume 3: Infrastructure and Passenger, and Volume 4: Systems Management* (The American Railway Engineering and Maintenance-of-Way Association; Lanham, Maryland; 2013)
Caltrans	*Transportation Electrical Equipment Specifications – TEES* (California Department of Transportation; http://www.dot.ca.gov/hq/traffops/elecsys/TEES.htm)
CCRFCD	*Hydrologic Criteria and Drainage Design Manual* (HCDDM) (Clark County Regional Flood Control District; Las Vegas, Nevada; Revised October 2010)
CCRFCD	*Las Vegas Valley Flood Control Master Plan Update* *(Clark County Regional Flood Control District; Las Vegas, Nevada; 2008)*
CCRFCD	*Policies and Procedures Manual* *(Clark County Regional Flood Control District; Las Vegas, Nevada; 2011)*
City of Las Vegas, NV	*Approved Materials List: "Design and Construction Standards for Wastewater Collection Systems 2009", latest edition; (*Clark County Water Reclamation, November 5, 2013*)*
Clark County, NV	*Clark County, Nevada* (Federal Emergency Management Agency [FEMA]; Flood Insurance Rate Map [FIRM], Map Number 32003C2170 E; September 27, 2002;
City of Las Vegas, NV	*Las Vegas Downtown Centennial Plan* (City of Las Vegas, Nevada; July 5, 2000)
Clark County, NV	*Uniform Standard Drawings for Public Works Construction, Clark County Area, Nevada* (Regional Transportation Commission of Southern Nevada; Las Vegas, Nevada)
Clark County, NV	*Uniform Standard Specifications for Public Works Construction Off-Site Improvements, Clark County Area, Nevada, Volumes I and II* (Regional Transportation Commission of Southern Nevada; Las Vegas, Nevada) And as amended by the sections set forth in Attachment 26-2 (*City of Las Vegas Special Provisions*).
Clark County, NV	*Design and Construction Standards for Wastewater Collection Systems, Southern Nevada*, 3rd Edition (Clark County Water Reclamation District, City of Boulder City, City of Henderson, City of Las Vegas, and City of North Las Vegas; 2009)
FHWA	*Bridge Inspector's Reference Manual*, Publication No. FHWA-NHI-12-049 (Federal Highway Administration; Washington, DC; December 2012)

Table 26-1 Standards and References

Author/ Agency	Title
FHWA	*Bridge Load Ratings for National Bridge Inventory* (Memorandum; Federal Highway Administration; Washington, DC; October 30, 2006; http://www.fhwa.dot.gov/bridge/nbis/103006.cfm)
FHWA	*Culvert Pipe Liner Guide and Specifications*, Publication No. FHWA-CFL/TD-05-003 (Federal Highway Administration, Central Federal Lands Highway Division; Lakewood, Colorado; July 2005)
FHWA	*Drilled Shafts: Construction Procedures and LRFD Design Methods*, Publication No. FHWA-NHI-10-016 (Federal Highway Administration; Washington, DC; May 2010)
FHWA	*Design and Construction of Mechanically Stabilized Earth Walls and Reinforced Soil Slopes – Volumes I and II,* Publication No. FHWA-NHI-10-024 (Federal Highway Administration; National Highway Institute [NHI] Courses No. 132042 and 132043; November 2009.
FHWA	*FHWA Rule/FTA Policy on ITS Architecture and Standards* 23 CFR Parts 655 and 940, Intelligent Transportation System Architecture and Standards; Final Rule, see http://www.ops.fhwa.dot.gov/its_arch_imp/docs/20010108.pdf)
FHWA	*Systems Engineering for Intelligent Transportation Systems: An Introduction for Transportation Professionals*, Publication No. FHWA-HOP-07-069 (Federal Highway Administration; Washington, DC; January 2007)
FHWA	*Geotechnical Engineering Circular No. 4: Ground Anchors and Anchored Systems*, Publication No. FHWA-IF-99-015 (Federal Highway Administration; Washington, DC; June 1999)
FHWA	*Geotechnical Engineering Circular No. 7: Soil Nail Walls.* Report No. FHWA0-IF-03-017 (Federal Highway Administration; Washington, DC; March 2003)
FHWA	*Guidelines for the Design of Subsurface Drainage Systems for Highway Pavement Structural Sections*, Publication No. FHWA RD-72-30 (Federal Highway Administration; Washington, DC; June 1972)
FHWA	*HDS-02, Highway Hydrology*, Second Edition, Publication No. NHI-02-001 (Federal Highway Administration; Washington, DC; 2002)
FHWA	*HDS-05, Hydraulic Design of Highway Culverts*, Third Edition, Publication No. FHWA-HIF-12-026 (Federal Highway Administration; Washington, DC; 2012)
FHWA	*HEC-9, Debris Control Structures Evaluation and Countermeasures*, Publication No. FHWA-IF-04-016 (Federal Highway Administration; Washington, DC; 2005)
FHWA	*HEC-11, Design of Riprap Revetment*, Publication No. FHWA-IP-89-016 (Federal Highway Administration; Washington, DC; 1987)

Table 26-1 Standards and References

Author/ Agency	Title
FHWA	*HEC-14, Hydraulic Design of Energy Dissipaters for Culverts and Channels*, Publication No. FHWA-NHI-06-086 (Federal Highway Administration; Washington, DC; 2006)
FHWA	*HEC-15, Design of Roadside Channels with Flexible Linings*, Third Edition, Publication No. FHWA-IF-05-114 (Federal Highway Administration; Washington, DC; 2005)
FHWA	*HEC-21, Bridge Deck Drainage Systems*, Publication No. FHWA-SA-92-010 (Federal Highway Administration; Washington, DC; 1993)
FHWA	*HEC-22, Urban Drainage Design Manual*, Third Edition, Publication No. FHWA-NHI-10-009 (Federal Highway Administration; Washington, DC; 2009
FHWA	*HEC-23, Bridge Scour and Stream Instability Countermeasures, Volumes 1 and 2*, Third Edition, Publications No. FHWA-NHI-09-111 and No. FHWA-NHI-09-112 (Federal Highway Administration; Washington, DC; 2009)
FHWA	*Manual on Uniform Traffic Control Devices* (MUTCD) (Federal Highway Administration; Washington, DC; 2009 with Revisions 1 and 2, May 2012)
FHWA	*Mitigation Strategies for Design Exceptions,* Publication No. FHWA-SA-01-011 (Federal Highway Administration; Washington, DC; July 2007)
FHWA	*Standard Highway Signs* (Nevada Supplement) (Nevada Department of Transportation, after Federal Highway Administration; Carson City, Nevada; 2006)
FHWA	*Seismic Retrofitting Manual for Highway Structures: Part 1 – Bridges,* Publication No. FHWA-HRT-06-032 (Federal Highway Administration; Washington, DC; January 2006) *Seismic Retrofitting Manual for Highway Structures: Part 2 – Retaining Structures, Slopes, Tunnels, Culverts, and Roadways,* Publication No. FHWA-HRT-05-067 (Federal Highway Administration; Washington, DC; August 2004)
FHWA	*Subsurface Investigations – Geotechnical Site Characterization, Reference Manual*, Publication No. FHWA NHI-01-031 (Federal Highway Administration; Washington, DC; May 2002)
Institute of Transportation Engineers	*Traffic Control Devices Handbook*, Second Edition (Institute of Transportation Engineers; Washington, DC; Editor, Robert K. Seyfried; March 2013)
International Code Council	*International Building Code (IBC),* (International Code Council; Brea, California; 2012)
IES	*Roadway Lighting*, RP-8-00, Reaffirmed 2005 (ANSI Approved) (Illuminating Engineering Society; New York, New York; 2005)

Table 26-1 Standards and References

Author/ Agency	Title
IESNA	*Photometric Measurement of Roadway Lighting Installations*, LM-50-99 (Illuminating Engineering Society-North America [IESNA]; New York, New York; Revised Edition, May 1999)
IES	*Design Guide for Roadway Lighting Maintenance*, DG-4-03 (Illuminating Engineering Society; New York, New York; 2003)
IES	*Addressing Obtrusive Light (Urban Sky Glow and Light Trespass) in Conjunction with Roadway Lighting*, TM-10-00, Reaffirmed 2011 (Illuminating Engineering Society; New York, New York; 2011)
ISO	*ISO 9000:2005 Quality Management Systems – Fundamentals and Vocabulary*, Confirmed 2009 (International Standards Organization [ISO]; 2013)
ISO	*ISO 9001:2008 Quality Management Systems – Requirements* (International Standards Organization [ISO]; 2013)
LVVWD	*Uniform Design and Construction Standards for Potable Water Distribution Systems,* (Las Vegas Valley Water District; Las Vegas, Nevada; 2010)
NDOT	*Access Management System and Standards* (Nevada Department of Transportation, Traffic Engineering; Carson City, Nevada; July 1999)
NDOT	*Aesthetic Alternatives for NDOT Design Standards* (Nevada Department of Transportation; Carson City, Nevada; December 2009)
NDOT	*Bridge Inspection Coding Guide*, Appendix 29A to Chapter 29, Bridge Management in *Structures Manual* (Nevada Department of Transportation; Carson City, Nevada; September 2008)
NDOT	*Bridge Drafting Guidelines (with Sample Drawings)* (Nevada Department of Transportation; Carson City, Nevada; May 2005)
NDOT	*Computer-Aided Design and Drafting Standards Manual* (Nevada Department of Transportation; Carson City, Nevada; October 31, 2000)
NDOT	*Conceptual Guide Sign Plan* (Nevada Department of Transportation; Carson City, Nevada)
NDOT	*Construction Manual* (Nevada Department of Transportation; Carson City, Nevada; January 2009; revised November 2012)
NDOT	*Construction Survey Manual* (Nevada Department of Transportation; Carson City, Nevada)
NDOT	*CORSIM Modeling Guidelines* (Nevada Department of Transportation; Carson City, Nevada; September 2012)

Table 26-1 Standards and References

Author/ Agency	Title
NDOT	*Design Plan Preparation Guide* (Nevada Department of Transportation; Carson City, Nevada)
NDOT	*Drainage Manual*, 2nd Edition (Nevada Department of Transportation, Hydraulic Section; Carson City, Nevada; December 2006)
NDOT	*Documentation Manual* (Nevada Department of Transportation; Carson City, Nevada)
NDOT	*Freeway and Arterial System of Transportation (FAST) Basis of Design Document* (Nevada Department of Transportation; Carson City, Nevada; revised March 2007)
NDOT	*Freeway and Arterial System of Transportation (FAST) System Design Overview* (Nevada Department of Transportation; Carson City, Nevada; March 15, 2000)
NDOT	*Freeway and Arterial System of Transportation (FAST) Field Device Communications Protocol* (Nevada Department of Transportation; Carson City, Nevada; February 14, 2002)
NDOT	*Traffic Forecasting Guidelines* (Nevada Department of Transportation; Carson City, Nevada; August 2012)
NDOT	*I-15 Landscape and Aesthetics Corridor Plan* (Nevada Department of Transportation; Carson City, Nevada; August 2005)
NDOT	*Managed Lanes and Ramp Metering Design Manual, Part 1: Introduction and Policies, Part 2: Implementation Plan, Part 3: Design Manual, Part 4: Ramp Metering Performance Measurement Plan, and Part 5: Public Outreach Primer* (Nevada Department of Transportation; Carson City; Nevada; December 2013)
NDOT	*Materials Division Testing Manual* (Nevada Department of Transportation; Carson City, Nevada; various dates; http://www.nevadadot.com/About_NDOT/NDOT_Divisions/Operations/Materials/Materials_Division_Testing_Manual.aspx)
NDOT	*NDOT HOV/Managed Lanes and Ramp Metering Design Manual, March, 2006*
NDOT	*Bridge Elements Coding Guide*
NDOT	*Pattern and Palette of Place: A Landscape and Aesthetics Master Plan for the Nevada State Highway System* (Nevada Department of Transportation; Carson City, Nevada; July 3, 2002)
NDOT	*Project NEON Aesthetics and Landscape Requirements Report* (Nevada Department of Transportation; Carson City, Nevada; August 2006)
NDOT	*Right-of-Way Manual* Nevada Department of Transportation; Carson City, Nevada; February 2011

Table 26-1 Standards and References

Author/ Agency	Title
NDOT	*Road Design Guide*, 2010 Edition (Nevada Department of Transportation; Carson City, Nevada; 2010)
NDOT	*Roadway Functional Classification Map* (Nevada Department of Transportation; Carson City, Nevada; various dates; http://www.nevadadot.com/About_NDOT/NDOT_Divisions/Planning/Roadway_Systems/FCMGS_Clark.aspx)
NDOT	*Soundwall Systems Evaluation Manual* (Nevada Department of Transportation, Structural Design Division; Carson City, Nevada; August 2000)
NDOT	*Southern Nevada Regional ITS Architecture*
NDOT	*Special Instructions for Location Consultants: Survey, Utility Database, LiDAR, Imagery, Photogrammetric Mapping, and GIS*, Draft (Nevada Department of Transportation, Location Division, Geodesy Section; Carson City, Nevada; January 2014)
NDOT	*Standard Plans for Road and Bridge Construction* (Nevada Department of Transportation; Carson City, Nevada; 2010) English
NDOT	*Standard Specifications for Road and Bridge Construction* (Nevada Department of Transportation; Carson City, Nevada; 2014) And as amended by the sections set forth in Attachment 26-1 (*Amended Standard Specifications*).
NDOT	*Storm Water Quality Manuals: Construction Site Best Management Practices (BMPs) Manual* (Nevada Department of Transportation; Carson City, Nevada; January 2006)
NDOT	*Storm Water Quality Manuals: Planning and Design Guide* (Nevada Department of Transportation; Carson City, Nevada; January 2006)
NDOT	*Structures Manual* (Nevada Department of Transportation, Structures Division; Carson City, Nevada; 2008, Revised May 2011 [2011-1])
NDOT	*The Work Zone Safety and Mobility Implementation Guide* (Nevada Department of Transportation; Carson City, Nevada; January 1, 2008, Revised March 2012)
NDOT	*Traffic and Construction Noise Analysis and Abatement Policy* (Nevada Department of Transportation; Carson City, Nevada; April 18, 2011, Revised September 26, 2012)
NDOT	*105 IAC Utility Relocation Guidance* (Nevada Department of Transportation; Carson City, Nevada)

Table 26-1 Standards and References

Author/ Agency	Title
NDOT	*NDOT Documentation Manual.* (Nevada Department of Transportation; Carson City, Nevada; January 2010; https://www.nevadadot.com/About_NDOT/NDOT_Divisions/Operations/Construction/Documentation_Manual.aspx)
Nevada Department of Conservation and Natural Resources	*Regulations for Water Well and Related Drilling (with 2011 Nevada Revised Statutes Related to Underground Water and Wells* (Nevada Department of Conservation and Natural Resources; Office of State Engineer, Division of Water Resources; Revised and Adopted June 2012, September 2012)
NEMA	*National Electric Manufacturers Association Standards* (National Electric Manufacturers Association [NEMA]; various dates; https://www.nema.org/Standards/pages/default.aspx)
NFPA	*National Electric Code (NEC)*, NFPA 70 (National Fire Protection Association [NFPA]; Quincy, Massachusetts; 2014)
RTC	"Pedestrian Clearance, Yellow Change, and All-Red Clearance Interval Signal Timings," Section IV of *Transportation Management Strategies* (Regional Transportation Commission of Southern Nevada [RTC]; Freeway and Arterial System of Transportation [FAST], Operations Management Committee; Las Vegas, Nevada; 2012)
SNBO	*Southern Nevada Building Officials Regional Standard Details* (Southern Nevada Building Officials; http://snbo.snicc.org/regional-standards-details.php)
TRB	National Cooperative Highway Research Program (NCHRP) Report 480: *A Guide to Best Practices for Achieving Context Sensitive Solutions* (Transportation Research Board; Washington, DC; 2002)
TRB	National Cooperative Highway Research Program (NCHRP) Report 554: *Aesthetic Concrete Barrier Design* (Transportation Research Board; Washington, DC; 2006)
TRB	National Cooperative Highway Research Program (NCHRP) Synthesis 303: *Assessment and Rehabilitation of Existing Culverts* (Transportation Research Board; Washington, DC; 2002)
TRB	*Highway Capacity Manual 2010 (HCM2010)* (Transportation Research Board; Washington, DC; 2010)
TRB	National Cooperative Highway Research Program (NCHRP) Report 500, Volume 17: *A Guide for Reducing Work Zone Collisions* (Transportation Research Board; Washington, DC; 2006)
TRB	NCHRP Report 350: *Recommended Procedures for the Safety Performance Evaluation of Highway Features* (Transportation Research Board; Washington, DC; 1993)

Table 26-1 Standards and References

Author/ Agency	Title
United States Access Board	*Proposed Accessibility Guidelines for Pedestrian Facilities in the Public Right-of-Way* (United States Access Board; Washington, DC; July 26, 2011)
Railroad	*BNSF Railway – Union Pacific Railroad, Guidelines for Railroad Grade Separation Projects, dated January 24, 2007*
Railroad	*Guidelines for Preparation of a Bridge Demolition and Removal Plan for Structures over Railroad* (Union Pacific Railroad; Omaha, Nebraska; March 31, 1998)

This page intentionally left blank.

ATTACHMENT 01-1
TENTATIVE LIST OF CONCURRENT PROJECTS ADJACENT TO THE PROJECT

This page intentionally left blank.

Tentative List of Concurrent Projects Adjacent to the Project *			
No.	Project	Estimated Construction Start	Estimated Construction Complete
NDOT			
1	EA 73796 I-15 North Seismic Retrofits (CL44.13-48.43)	2015Q3	2016Q3
2	EA 73797 I-515 Downtown Viaduct Seismic Retrofit and Bridge Deck Rehab (CL74.35-76.67)	2016Q1	2018Q2
City of Las Vegas			
Roadway Projects			
1	Main Commerce One-Way Couplet - Las Vegas Boulevard to Bonneville	2014Q2	2015Q2
2	Martin L. King Boulevard Improvements - Costco to Metro Headquarters	2013Q3	2015Q3
3	Las Vegas Boulevard Improvements - Sahara to Stewart	2015Q2	2016Q2
4	Rancho Drive Pavement Overlay Mesquite to Charleston	2020	2021
5	Charleston Boulevard Landscaped Median Improvements - 6th to Maryland	2013Q3	2015Q4
6	Alta Drive Complete Street Improvements - Rancho to Main	2017	2018
7	Oakey Avenue Bicycle Lanes - Rainbow to Industrial	2014Q1	2015Q4
8	Main Street Complete Street Improvements - Bonneville to I-515	2013Q4	2015Q3
9	Shadow Lane Complete Street Improvements - Charleston to Alta	2015Q2	2016Q1
10	Charleston Boulevard Complete Street Improvements - Rancho to Shadow	2016Q2	2017Q1
11	Carson Street Bicycle & Pedestrian Improvements - Casino Center to 9th	2015Q4	2016Q3
12	Gass Avenue Bicycle & Pedestrian Improvements - Main to Charleston	2015Q4	2016Q3
13	Coolidge Street Bicycle & Pedestrian Improvements - Main to 4th	2015Q4	2016Q3
14	Martin L. King Boulevard Relocation with Project Neon - Oakey to Charleston	2016	2017
15	6th Street Bicycle & Pedestrian Improvements - Bridger to Stewart	2015Q4	2016Q3
16	Bridger Street Bicycle & Pedestrian Improvements - Main to Las Vegas Boulevard	2013Q2	2015Q2
17	3rd Street Bicycle & Pedestrian Improvements - Charleston to Fremont	2014Q4	2015Q3
Regional Transportation Commission (RTC)			
Area-wide Major Projects – City of Las Vegas			
	No RTC projects identified at this time.		
* Additional projects could be added to the list pending each agency's prioritization and funding availability.			

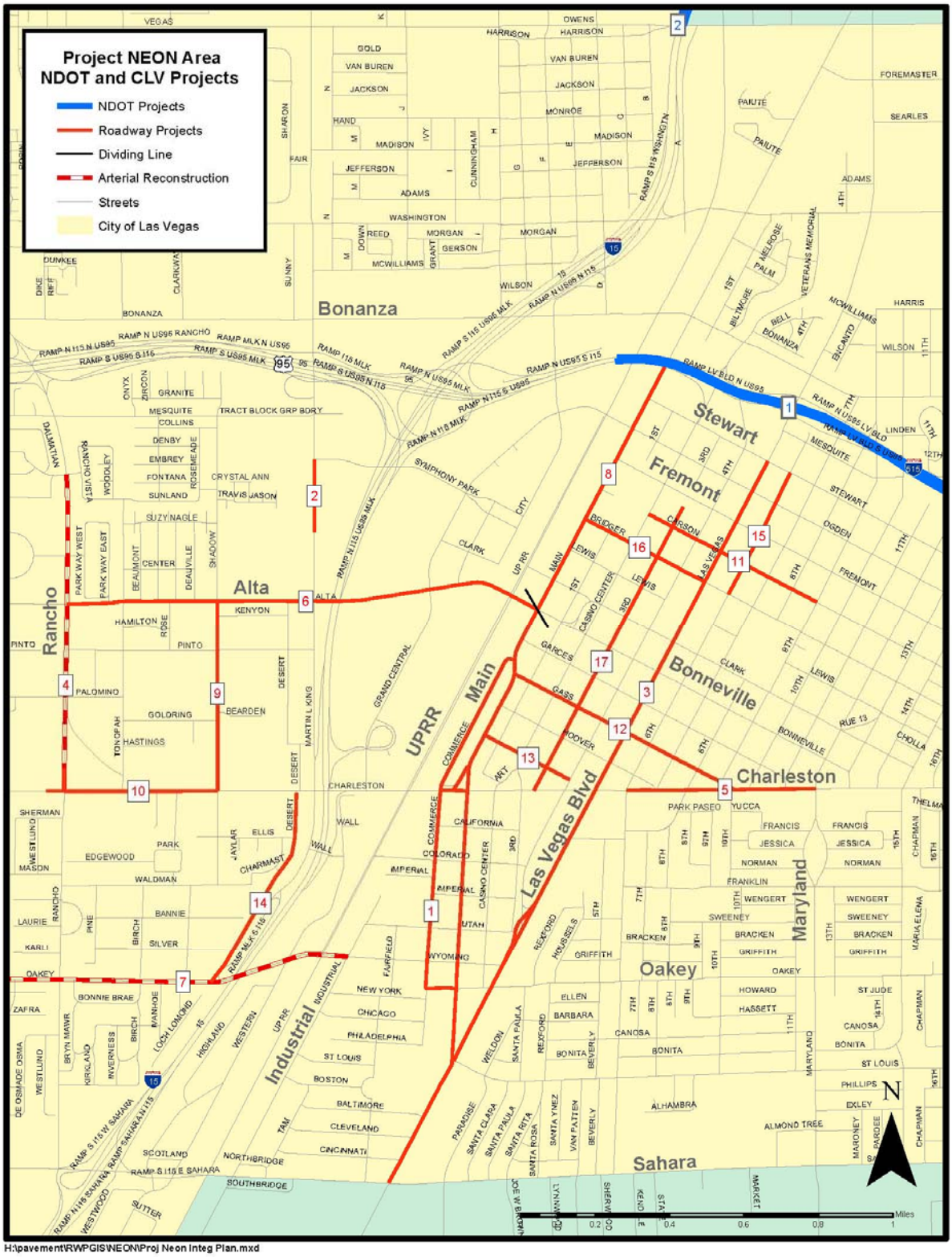

H:\pavement\RWPGIS\NEON\Proj Neon Integ Plan.mxd

ATTACHMENT 01-2
SAFETY AND HEALTH – SAFETY PLAN

This page intentionally left blank.

1 SAFETY AND HEALTH REQUIREMENTS

Design-Builder shall perform all Work in the Contract in a skillful manner with due regard to the safety and health of its Employees and of the public, and in compliance with all applicable Laws. Design-Builder shall comply with 29 *Code of Federal Regulations* (CFR) Part 1926 regarding the safety and protection of persons employed in construction and demolition Work.

1.1 Occupational Safety and Health

In accordance with Occupational Safety and Health Administration (OSHA) regulations, Design-Builder's employees shall be required to wear protective helmets (hard hats) when there is a possible danger of head injury from impact, from falling or flying objects, or from electrical shock and burns. Additionally, all employees working within an active highway right-of-way (ROW) must wear protective helmets at all times. Helmets are not required for employees within a completely enclosed cab constructed of a steel frame and glass or inside an automobile. Helmets must meet current OSHA standards for impact, electrical shock, and burn protection. Design-Builder's employees will be considered to include everyone on its payroll, as well as employees of Subcontractors, Suppliers, and other personnel on the Site under the direction of Design-Builder.

Design-Builder shall be responsible for performing all necessary planning, supervision, and training activities to ensure that all of the requirements of 29 CFR Part 1926 are fully met for all workers employed in the Work of the Project. Design-Builder shall provide satisfactory evidence to the Department that all current requirements of 29 CFR Part 1926 will be adequately addressed before the start of Work.

1.2 Safety and Protection

1. Design-Builder shall be solely responsible for initiating, maintaining, and supervising all safety precautions and programs in connection with the Work. Design-Builder shall take all necessary precautions for the safety of, and shall provide the necessary protection to prevent damage, injury, or loss to, the following:

    a. All employees employed in the Construction Work and other persons who may be affected thereby.

    b. All Work and all equipment and material to be incorporated therein, whether in storage on or off the Site.

    c. Other property at the Site or adjacent thereto, including trees, shrubs, lawns, walks, pavements, roadways, structures, and Utilities, except as designated for relocation, removal, or replacement as part of the Work.

2. Design-Builder shall take immediate action after an accident to correct the Construction Work methods and conditions that are the apparent cause of the accident.

3. Design-Builder's duties and responsibilities for the safety and protection of the Construction Work shall continue until Final Acceptance, provided, however, that Design-Builder shall retain responsibility for safety and protection related to the Work during the Operating Period as specified in the Contract Documents. Design-Builder shall coordinate the Work with the Department's safety staff.

4. Design-Builder shall comply with the following:

    a. Perform the Work with due regard for the protection of public and private property and the health, welfare, mobility, safety, and convenience of the public, particularly with regard to disabled persons and pedestrians.

    b. When the Work involves use of public ways, provide necessary flaggers and traffic control devices and install and maintain means of reasonable access to all fire hydrants, service stations, warehouses, stores, houses, garages, and other property. Private residential driveways shall be closed only within the specified constraints and requirements for notice contained in the Contract Documents.

    c. Allow the public's travel over any public highway, street, or sidewalk without obstruction or interference except as specified in the Contract Documents. Do not obstruct drainage in roads or natural or constructed drainage ways.

    d. Comply with all instructions received from the Department or local authorities regarding protection of public and private property and the health, welfare, mobility, public safety, and convenience of the public.

    e. Provide reasonable access to the Work area at all times for emergency traffic, such as police, fire, and ambulance units.

    f. Give notice and describe upcoming construction to agencies, owners, tenants, and residents in accordance with the Contract Documents.

1.3 Design-Builder's Safety Obligations

Design-Builder shall perform all actions necessary for safety and be solely and completely responsible for conditions on the Site, including safety of all persons and property on the Site during the term of the Contract. This requirement shall apply continuously for the duration of the Contract and shall not be limited to normal business hours or other time constraints or be reduced or diminished in any way because Design-Builder is not given sole possession of the Site. Design-Builder is fully responsible for the safety of workers engaged upon the Project and all other persons working at or visiting the Site and the protection of the public in the vicinity.

1.4 Design-Builder's Safety Plan

Design-Builder shall submit a written Project-specific Safety Plan that documents Design-Builder's safety policy and identifies and addresses specific health and safety concerns to be encountered on the Project to the Department for review and approval. Before the Work begins, and at regular periods throughout the Contract, Design-Builder's Project supervision staff shall meet with the Department to review and discuss the status of safety issues on the Project. An appropriate notice shall be posted at the job Site that the Safety Plan is available for examination by any worker employed on the Project.

Design-Builder shall implement, review, and update the Safety Plan and introduce a program for assuring that the Safety Plan is followed at all times. Design-Builder shall coordinate with all authorities and relevant entities as necessary to ensure compliance with the Safety Plan.

The Department will monitor and audit Design-Builder's safety performance. The Safety Plan shall provide for the following:

1. Planning, management, and design to avoid hazards
2. Detection of potential hazards
3. Timely correction of hazards
4. Dedication to the protection of the public and the Workers
5. Active participation of all persons involved with the Contract
6. Dedicated safety staff
7. Liaison with the Department's safety monitoring staff
8. Safety training and safety meetings

Design-Builder shall ensure that all its employees and those of the Subcontractors of any tier (including labor-only) are under an obligation at all times to fully conform to the provisions of the Safety Plan.

1.4.1 Content of the Safety Plan

The Safety Plan shall be comprehensive and include all required actions, activities, rules, and mitigation relative to the safety of the Work. The Safety Plan shall include an Emergency Plan and an Incident Management Plan as described in Section 6.5.6 (*Emergency, Unforeseen Utility Disruptions, Hazardous Conditions, Traffic Emergencies, Security, and Loss-of-Access Notifications*) of these Technical Provisions. The Safety Plan shall include, at a minimum, the following items:

1. Policy statement indicating Design-Builder's commitment to safety, goals stated as maximum lost hours, and no loss of life goals
2. Identification of Design-Builder's safety officers, including responsibility definitions, an organization chart, reporting procedures, safety inspection procedures, and audit programs
3. References to all applicable Laws
4. An education and training plan for required training for all Workers, including a separate program and Hazardous Materials communications plan for Workers involved with hazardous and contaminated substances remediation, required toolbox meetings, and required posting of information
5. Procedures to address Project health and safety concerns, including housekeeping, material handling and storage, personal protective equipment, wall and floor openings, scaffolds, ladders, welding, flame cutting, electrical equipment, lock-out or tag-out, motor vehicles, heavy equipment, small tools, concrete forms, steel erection, cranes and hoisting, Work platforms, fire prevention and protection, sanitation, confined space entry, blasting and explosives, and other items
6. Industrial hygiene, including respiratory protection, noise, Hazardous Materials, Material Safety Data Sheets, and lists of hazardous chemicals present

7. Fire protection and prevention
8. Emergency and rescue procedures, including detailed procedures for all types of emergencies, such as, medical, fire, chemical spill, property damage, bomb threat, severe weather, flooding, explosion, and earthquakes
9. Incident investigation, reporting, and record-keeping
10. Policy for substance abuse
11. Security provisions
12. Safety requirements and procedures for surveyors and engineering personnel conducting Site investigations and verification sampling and testing
13. Procedures for compelling worker compliance with health and safety requirements
14. Emergency phone numbers

The Safety Plan shall contain a list of the detailed safety procedures to be followed.

1.4.2 Submittal of the Safety Plan

Before the start of any field Work or construction, Design-Builder shall submit a Safety Plan to the Department in accordance with the requirements of the Contract Documents. Upon receipt of approval, Design-Builder shall issue the complete Safety Plan, which will be based on the safety information contained in the preliminary project management plan in Design-Builder's Proposal along with the incorporated comments of the Department and any other required updating. The Safety Plan shall be a controlled document to be issued by Design-Builder to, at least, the following persons:

1. The Department
2. Design-Builder's Project Manager
3. Design-Builder's Safety Manager
4. Design-Builder's Design Manager
5. Design-Builder's Quality Manager
6. Design-Builder's Construction Quality Manager
7. Design-Builder's Design Quality Manager
8. DB-Related Entities

Other controlled copies shall be distributed as determined by Design-Builder and the Department. Uncontrolled copies shall be issued as considered necessary by Design-Builder.

Design-Builder shall maintain a traceable record of the issuance of the controlled copies, including numbering and acknowledgement of receipt. Revisions to the Safety Plan shall be subject to the provisions of Section 2.1.1 of the Contract and upon approval by the Department, shall be issued to all recipients of the controlled copies and managed in the same way as the controlled copies.

Submission of the required Safety Plan by Design-Builder and its approval by the Department shall not be construed to imply approval of any particular method or sequence for addressing health and safety concerns or to relieve Design-Builder from the responsibility to adequately protect the health and safety of all workers involved in the Project as well as any members of the public who are affected by the Project.

1.4.3 Revisions to the Safety Plan and Procedures

The Department may require a revision to the Safety Plan or any safety procedure in order to ensure compliance with the Contract. Following discussion with the Department, Design-Builder shall issue such revision within 30 Days of receipt of the instruction.

Design-Builder shall review the Safety Plan and any safety procedure in order to revise it in accordance with activities and experiences on the Site. Such revision, from time to time, shall enhance the standards of safety being implemented on the Site. At the very least, procedures shall be reviewed and new procedures issued whenever the character or extent of any activity is changed or a new activity of a different nature is introduced that necessitates such revision.

In addition to such revision, Design-Builder shall conduct a formal review of the Safety Plan once every 6 months on or near the anniversary of NTP. Such formal review shall consider all matters pertaining to safety planning and implementation, including accident reports, inspections, audits, suggestions from meetings, and other sources, such as the Department and hazard analysis reviews. Within 7 Days of finishing this review, Design-Builder shall issue a review report to the Department, giving the conclusions of the review and identifying the revisions to be made to the Safety Plan.

Within 30 Days of the issue of the review report, Design-Builder shall issue a revised Safety Plan for review and approval by the Department in accordance with Section 2.1.1 of the Contract.

1.4.4 Design-Builder's Safety Organization

Design-Builder shall designate a member of the executive team, if it is a corporation or a joint venture, or a principal of the organization who shall be responsible and directly accountable to the Department in all matters concerning safety. Design-Builder shall also require its Project Manager to be responsible and directly accountable to this designated safety board member or principal in all matters concerning safety.

Design-Builder's Project Manager shall be designated as the Emergency Contact Person, with the Deputy Project Manager as an alternate contact. The names of both persons and the telephone numbers at which they can be reached at any time shall be given to the Department and all police agencies in the area. Both individuals shall have full authority and capability to mobilize forces promptly as required to respond to an emergency and protect the public.

Design-Builder's Safety Manager is a Key Personnel and whose Project duties shall be solely connected with the safety aspects of the Project and who shall report directly to the designated safety board member or principal. Such an appointment shall be subject to written acceptance by the Department. The Safety Manager shall meet the minimum qualifications as described in Section 1.6.3 (*Key Personnel*). The Safety Manager shall implement, maintain, and monitor compliance with the Safety Plan and all safety procedures, and shall be based full-time at the Site.

Design-Builder shall provide and maintain an organizational structure that ensures the effective control of the Project's safety assurance tasks by Design-Builder's safety staff. Such staff shall be engaged solely in safety assurance. Responsibilities and task subdivision shall be clearly identified in the Safety Plan, and shall show direct lines of communication and reporting between Design-Builder's Safety Manager and the designated safety board member or principal and between the Design-Builder's Safety Manager and Design-Builder's Project Manager.

Design-Builder shall not remove the appointed Safety Manager without the prior written consent of the Department. Design-Builder shall nominate any replacement at the same time consent is sought.

If the Safety Manager is removed for incompetence or fitness for duty, a suitably qualified and immediately available replacement shall be proposed to the Department within 14 Days of receipt of the notice requiring the removal.

Design-Builder shall provide adequate numbers of supporting personnel for the Safety Manager, including a deputy to act in his/her absence.

Design-Builder shall not begin any Work on the Site until the Safety Manager has been appointed and accepted by the Department and has begun his/her duties on the Site.

Design-Builder shall give authority to the Safety Manager and safety staff to issue "stop Work orders" that instruct employees of Design-Builder and its Subcontractors of any tier, including labor-only Subcontractors, to cease operations and take urgent and appropriate action to make the Site safe and prevent unsafe working practices or other infringements of the Safety Plan or breach of any Laws.

Design-Builder shall require the Safety Manager to verify by inspection that the requirements of Design-Builder's Safety Plan and safety procedures are being strictly complied with. In the event of any noncompliance, the Safety Manager shall forthwith issue an instruction to stop Work until the noncompliance is rectified. Once rectified, Work may resume with approval from the Department.

No Work shall be performed on Site unless Design-Builder's Safety Manager or designated deputy is on Site. Work shall not be performed at the Site unless the specified safety supervisors are on the Site.

1.5 Emergency Plan

Design-Builder's Emergency Plan shall include strategies, techniques, communications, and other plans for responding to Emergencies during the term of the Contract. Design-Builder shall coordinate this approach with the Department. Design-Builder's Emergency Plan at a minimum shall clearly and comprehensively address the following items:

- Communication protocol, process, and contact methods from Design-Builder to the Department describing Design-Builder's plan to respond and act to Emergencies.

- Protocol for communicating information to the emergency service providers regarding access to the Project ROW for emergency vehicles, including Design-Builder's personnel responsibilities for communicating the information.

- Communication protocol for notifying stakeholders and the public, including Design-Builder's personnel responsibilities for communicating the information.

- Proposed personnel available and response times for any Emergency condition requiring attention.

- Proposed personnel roles and responsibilities for responding to any Emergency condition requiring attention.

- Description of the proposed contact methods, personnel available, and response times for any Emergency condition requiring attention outside of normal working hours.

- Identification of all essential functions that need to be performed in the event of an Emergency.

- Identification of actions be taken to mitigate the Emergencies and how these actions will be applied to any Emergency.

- Corrective procedures, if applicable, that will be put in place as a result of the Emergency.

- In the event of an Emergency, Design-Builder shall summarize the Emergency protocol and submit a report to the Department within 5 Business Days of the Emergency.

1.6 Incident Management Plan

Design-Builder's Incident Management Plan shall include strategies, techniques, communications, and other approaches for responding to Incidences during the term of the Contract. Design-Builder shall coordinate this approach with the Department and Design-Builder's Traffic Management Plan. Design-Builder's Incident Management Plan shall address the following:

- Communication protocol, process, and contact methods from Design-Builder to the Department describing Design-Builder's plan to respond and act to Incidences.

- Protocol for communicating information to the emergency service providers regarding access to the Project ROW for emergency vehicles, including Design-Builder's personnel responsibilities for communicating the information.

- Communication protocol for notifying stakeholders and the public. Including Design-Builder's personnel responsibilities for communicating the information.

- Proposed personnel available and response times for any Incident condition requiring attention.

- Proposed personnel roles and responsibilities for responding to any Incident condition requiring attention.

- Description of the proposed contact methods, personnel available, and response times for any Incident condition requiring attention outside of normal working hours

- Identification of all essential functions that need to be performed in the event of an Incident.
- Identification of actions be taken to mitigate the Incidences and how these actions will be applied to any Incident.
- Corrective procedures, if applicable, that will be put into place as a result of the Incident.
- In the event of an Incident, Design-Builder shall summarize the Incident protocol and submit a report to the Department within 5 Business Days of the Incident.

1.7 Not Used

1.8 Inspections

Design-Builder shall notify the Department of any Inspections to be conducted on the Project by the U.S. Department of Labor, OSHA, or other health and safety agencies, and of any resulting closing conference, and to the extent possible, provide the Department with the opportunity to be present at such Inspections and closing conference. Design-Builder shall notify the Department in writing of the results of any health and safety Inspections conducted on the Project by representatives of the U.S. Department of Labor, OSHA, or other health and safety agencies, within 1 Business Day of the completion of the closing conference resulting from such Inspections. If any citations are issued for alleged violations, a copy shall be provided to the Department within 1 Business Day of their receipt by Design-Builder, and a copy of the final disposition of such citations shall also be provided to the Department within 1 Business Day of their receipt by Design-Builder. In addition, Design-Builder shall notify the Department within 24 hours of the details relative to any accident or incident occurring at the Site involving any worker employed working at the Site or delivering material, equipment, or supplies to the Project.

1.9 Reports

Design-Builder shall submit a safety report using Form SAF (shown at the end of this attachment) with the monthly Progress Report described in Section 1.6.1.1.4 (*Progress Report*) of these Technical Provisions.

1.10 Explosives

When the use of explosives is necessary for the prosecution of the Work, Design-Builder shall exercise the utmost care not to endanger life or property, including new work. Design-Builder shall be responsible for all damage resulting from the use of explosives.

Design-Builder shall store explosives in a secure manner in compliance with all Laws and shall clearly mark all such storage places. Where no Laws apply, Design-Builder shall provide satisfactory storage and in general not closer than 1,000 feet from the road or from any building or camping area or place of human occupancy.

Design-Builder shall notify each property owner and public utility company having structures or facilities in proximity to the site of the Work of the intention to use explosives. Design-Builder shall give such notice sufficiently in advance to enable the companies to take such steps as they may deem necessary to protect their property from injury.

1.11 Guarding and Protection

Design-Builder shall be responsible for guarding and protecting open and unattended excavations and other potentially hazardous locations in and adjacent to areas lawfully frequented by any person. Such guarding and protection shall consist of any one, or a combination of, the following:

1. A substantial fence or barricade, at least 4 feet high and mounted on satisfactory supports spaced at intervals of not more than 10 feet. Warning signs reading “DANGER – KEEP OUT” shall be mounted on the fence or barricade, as required by the Department, at no more than 100-foot intervals. The signs shall be 24 inches wide by 16 inches high. The lower portion of the sign shall be white and shall bear the words “KEEP OUT” in 5-inch black letters. The upper portion shall be predominantly red with 5-inch white lettering spelling out the word “DANGER.” The lettering shall be enclosed by an approximately elliptical, white ring and the entire sign bordered in black. All barricades and warning signs shall be furnished, erected, relocated, maintained, and removed as required.

2. A 4-foot extension of the trench sheeting above the ground surface adjacent to the excavation.

3. A substantial covering over the excavation. Where it is possible that vehicles will move over such covering, the covering shall be of sufficient strength to withstand the loading.

1.12 Equipment Involving Radioactive Materials

The use of equipment involving radioactive Materials, including, but not limited to, nuclear density gauges, shall adhere to all applicable regulations, including U.S. Nuclear Regulatory Commission (NRC) regulations, related U.S. Department of Transportation (DOT) regulations concerning transportation of radioactive material, and Nevada Revised Statutes (NRS) 459.010 to 459.290, inclusive, and shall be provided in the Safety Plan submitted to the Department. The Safety Plan shall address in detail transportation and storage of the equipment and operating and emergency procedures. Design-Builder shall provide the name and address of the radiation safety officer. A copy of the owner’s license to possess the radiation source shall also be provided. All equipment operators’ equipment shall be certified as having completed training on the safe and proper use of their specific piece of equipment. A copy of the certification shall be provided to the Department for each operator before their Work on the Project begins.

FORM SAF
Monthly Safety Report Format

Design-Builder's Name: _____

Period Covered (Month and Year): _____

Name of Design-Builder's Safety Manager: _____

Item	Contract Total This Period	Contract Cumulative Total
No. Man-Hours Worked (Construction)		
No. Lost Workday Cases (entire shift lost)		
No. Restricted Workday Cases (partial shift lost or reassigned to "light" duty)		
No. Cases Requiring Medical Attention		
No. Fatalities		
No. On-Site Safety Meetings		
No. On-Site Equipment Accidents		
No. Vehicle Accidents, including off-site accidents by vehicles working on Contract		
No. New Workers on Site During Period		
No. New Worker Safety Orientation		
No. Supervisor/Foreman Safety Sessions		
No. Site Safety Inspections		

1. Describe circumstances surrounding each lost workday and each fatality case.

2. Describe actions taken and/or planned to prevent reoccurrence.

FORM SAF
Monthly Safety Report Format (Continued)

(Signature)	(Signature)
(Printed or typed name) Design-Builder Executive	(Printed or typed name) Design-Builder's Project Manager
(Date)	(Date)

This page intentionally left blank.

ATTACHMENT 01-3
PROJECT MANAGEMENT PLAN

This page intentionally left blank.

This Attachment 01-3 contains the Project Management Plan (PMP) contents and schedule for provision of the component parts.

Legend:

A = Submitted by Design-Builder within 30 Days of initial Notice to Proceed (NTP1) and approved by the Department prior to commencement of Design Work and issuance of final Notice to Proceed (NTP2)

B = Submitted by Design-Builder within 90 Days of NTP1 and approved by the Department prior to commencement of Construction Work

C = Submitted by Design-Builder within 60 Days of initial Notice to Proceed (NTP1) and approved by the Department prior to commencement of Design Work and issuance of final Notice to Proceed (NTP2)

Part	Section	Contents	Required by
1. Project Administration			
	Organization	Organizational diagram	A
	Personnel	Names and contact details, titles, and job roles	A
	Design-Builder's	Design-Builder's contracting Plan	A
	Schedule	Design Submittal portion of the Project Baseline Schedule in accordance with Section 1 (*General Scope of Work*) of the Technical Provisions	A
		Balance of Project Baseline Schedule in accordance with Section 1 (*General Scope of Work*) of the Technical Provisions	B
	Quality Control	Procedures to establish and encourage continuous improvement	A
	Audit	Procedures to facilitate review and audit by the Department	A
		Auditing and management review of Design-Builder's own activities under the PMP	A
		Auditing and management review of Design-Builder's activities and management procedures	A
	PMP Update	Procedures for preparation of amendments and submission of amendments to any part of the PMP	A
	Document Management	The manner in which records will be maintained in compliance with the Technical Provisions, including any specific systems Design-Builder will use	A
		Document management procedures in compliance with Section 1 (*General Scope of Work*) of the Technical Provisions, including EDMS.	A

Part	Section	Contents	Required by
2. Quality Management System and Quality Manual			
	Organization	Design-Builder's main contractual arrangements	A
		Organizational structure covering the activities to be performed in accordance with the Contract Documents	A
	Personnel	Resource plan for Design-Builder and its Subcontractors	A
		Arrangements for coordinating and managing staff interaction with the Department and its consultants including collocation of Key Personnel and description of approach to coordinating work of offsite personnel	A
		Names and contact details, titles, job roles and specific experience required for the Key Personnel and for other principal personnel during design	A
		Names and contact details, titles, job roles of principal personnel for Subcontractors and any third party with which Design-Builder will coordinate activities	A
2A. Design Quality Management Plan			
	Organization	Design-Builder's main contractual arrangements	A
		Organizational structure covering the activities to be performed in accordance with the Contract Documents	A
	Personnel	Resource plan for Design-Builder and its Subcontractors	A
		Arrangements for coordinating and managing staff interaction with the Department and its consultants, including collocation of Key Personnel and description of approach to coordinating work of offsite personnel	A
		Names and contact details, titles, job roles, and specific experience required for the Key Personnel and for other principal personnel during Design Work	A
		Names and contact details, titles, and job roles of principal personnel for Subcontractors and any third party with which Design-Builder will coordinate activities	A
	Offices and Equipment	Description of the necessary offices and office equipment to be provided by Design-Builder during Design Work	A

Part	Section	Contents	Required by
	Design-Builder's	Overall control procedures for Design-Builder's, including consultants and subconsultants	A
		Responsibility of Design-Builder's and affiliates	A
		Steps taken to ensure Design-Builder's and Suppliers meet the obligations imposed by their respective Contracts	A
	Interfaces	Interfacing between Design-Builder, Subcontractors, and independent certifiers during Design Work, including interfaces between the structural design auditor, the safety auditor, and any quality reviewer	A
		Coordination with Utility Owners	A
	Environmental	Control of the interactions between environmental requirements (including landscaping) and the Design Work of the Project	A
	Procedures	Procedures describing how the principal activities will be performed during the design stage: to include geotechnical site investigation, surveys and mapping, environmental management, safety audit, structural audit, and checking	A
	Quality Control/Quality Assurance	Quality control and quality assurance procedures, including a resource table for monitoring and auditing all design services, design review and certification, and verification of plans	A
		Procedures for environmental compliance	A
		Procedures to establish Design-Builder's hold points in the design process where checking and review will take place	A
		Procedures to ensure accuracy, completion, and quality in submittals to the Department and Governmental Entities	A
		Procedures to establish and encourage continuous improvement	A
	Audit	Name of Design-Builder's representative(s) with defined authority for establishing, maintaining, auditing and reporting on the Design Quality Management Plan (DQMP)	A
		Names, titles, roles, and responsibilities of supporting quality management staff reporting to the person with defined authority	A
	Document Management	The manner in which records will be maintained in compliance with the Technical Provisions, including any specific systems that Design-Builder will use	A
		Document management procedures in compliance with Section 3 (*Design Quality Management*) of the Technical Provisions	A
		Identify environmental documentation and reporting requirements for the Environmental Compliance	A

Part	Section	Contents	Required by
		Plan	
2B. Construction Quality Management Plan			
	Organization	Design-Builder's main contractual arrangements	A
		Organizational structure covering the activities to be performed in accordance with the Contract Documents	A
	Personnel	Resource plan for the Design-Builder and its Subcontractors	B
		Arrangements for coordinating and managing staff interaction with the Department and its consultants including collocation of Key Personnel and description of approach to coordinating work of offsite personnel	B
		Names and contact details, titles, job roles, and specific experience required for the Key Personnel as related to Construction Work	A
		Names and contact details, titles, and job roles of principal personnel for Subcontractors and any third party with which Design-Builder will coordinate its activities	B
		Procedures for implementation of environmental compliance and mitigation training program for all employees in accordance with Section 7 (*Environmental*) of the Technical Provisions	B
	Offices and Equipment	Description of the necessary offices and office equipment to be provided by Design-Builder during Construction Work	A
	Design-Builder's	Overall control procedures for Design-Builder's, including consultants and subconsultants	B
		Responsibility of Design-Builder's and affiliates	B
		Steps taken to ensure Contractors and Suppliers meet the obligations imposed by their respective Contracts	B
		Procedures for implementation of environmental compliance and mitigation training program for employees of Contractors in accordance with Section 7 (Environmental) of the Technical Provisions	B
	Interfaces	Interaction among Design-Builder and Subcontractors, during Construction Work	A
	Procedures	List of Project-specific construction procedures	B
		Detailed procedure for each major Construction Work activity whether directly undertaken or subcontracted to include pavement, structures, drainage, and communications	B
		Construction transportation management plan	B

Part	Section	Contents	Required by
	Quality Control/Quality Assurance	Construction monitoring plan	B
		Construction monitoring program (environmental)	B
		Procedures for environmental compliance	B
		Control, identification, and traceability of materials, including any material or samples temporarily or otherwise removed from Site for testing or other reasons.	B
		Examinations and audits of Construction Work; review of examination and audit; issue of certificates	B
		Observation and reporting of all tests in compliance with Section 4 (*Construction Quality Assurance, Quality Control, and Oversight*) of the Technical Provisions	B
		Procedures for tests and inspections for the purpose of the Design-Builder's certifying that prior to burying, each part of the Work is complete and conforms to the Contract Documents.	B
		Quality control and quality acceptance procedures, including a resource table for monitoring and auditing during any construction work and testing undertaken by Design-Builder's and Suppliers both onsite and offsite	B
		Procedures to establish Design-Builder's hold points in Construction Work	B
		Procedures to ensure accuracy, completion, and quality in submittals to the Department and Governmental Entities	B
		Procedures to establish and encourage continuous improvement	A
	Audit	Inspection and test plans that identify the pro forma and/or databases to be used for recording the inspection and test results, and methodology for transmitting acceptance testing and inspection reports to the Department	B
		Name of Design-Builder's representative with defined authority for establishing, maintaining, auditing, and reporting on the Construction Quality Management Plan (CQMP)	A
		Names, titles, roles, and responsibilities of supporting quality management staff reporting to the person with defined authority	B
	Document Management	The manner in which records will be maintained in compliance with the Technical Provisions, including any specific systems that Design-Builder will use	B
		Document management procedures in compliance with Section 4 (*Construction Quality Assurance, Quality Control, and Oversight*) of the Technical Provisions	A

Part	Section	Contents	Required by
3. Environmental Management			
	Organization	Design-Builder's main contractual arrangements	A
		Organizational structure covering the activities to be performed in accordance with the Contract Documents	A
		Environmental contact tree	A
	Personnel	Resource plan for Design-Builder and its Subcontractors	B
		Arrangements for coordinating and managing staff interaction with the Department and its consultants, including collocation of Key Personnel and description of approach to coordinating work of offsite personnel	A
		Names and contact details, titles, job roles, and specific experience required for Key Personnel and for other environmental personnel	A
		Implement environmental compliance and mitigation training program for all employees in accordance with Section 7 (*Environmental*) of the Technical Provisions	A
	Design-Builder's	Overall control procedures for Design-Builder's, including consultants and subconsultants	A
		Responsibility of Design-Builder's and affiliates	A
	Environmental	Environmental Compliance and Mitigation Plan (ECMP)	B
		Environmental compliance and mitigation training program	A
		Spill Prevention Plan	B
		Hazardous Materials Management Plan (HMMP)	B
	Quality Control and Quality Acceptance	Procedures to ensure accuracy, completion, and quality in submittals to the Department and Governmental Entities	A
		Procedures to establish and encourage continuous improvement	A
		Procedures for environmental compliance	A
	Audit	Names, titles, roles, and responsibilities of supporting quality management staff reporting to the person with defined authority	B
	Document Management	The manner in which records will be maintained in compliance with Section 1 (*General Scope of Work*) of the Technical Provisions, including any specific systems that Design-Builder will use	A
		Identify environmental documentation and reporting requirements	A

Part	Section	Contents	Required by
4. Public Involvement Plan			
	Organization	Design-Builder's main contractual arrangements	A
		Organizational structure covering the activities to be performed in accordance with the Contract Documents	A
	Personnel	Resource plan for the Design-Builder and its Subcontractors	A
		Arrangements for coordinating and managing staff interaction with the Department and its consultants, including collocation of Key Personnel and description of approach to coordinating work of offsite personnel	A
		Names and contact details, titles, job roles, and specific experience required for Key Personnel and for other principal personnel	A
		Names and contact details, titles, and job roles of principal personnel for Subcontractors and any third party with which Design-Builder will coordinate its activities	A
	Offices and Equipment	Description of the necessary offices and office equipment to be provided by Design-Builder during Design Work	A
	Design-Builder's	Overall control procedures for Design-Builder's, including consultants and subconsultants	A
		Responsibility of Contractors and affiliates	A
		Steps taken to ensure Design-Builder's and Suppliers meet the obligations imposed by their respective Contracts	A
		Procedures for implementation of environmental compliance and mitigation training program for employees of Design-Builder	A
	Interfaces	Community Outreach Plan in accordance with Section 6 (*Public Involvement*) of the Technical Provisions	A
		Procedures for liaison with the public, the media, and other customer groups in accordance with Section 6 (*Public Involvement*) of the Technical Provisions and the press media policy of the Department. Proposed website configuration, layout, and content. Activation of Project website and hotline.	A
		Procedures to coordinate with Projects stakeholders such as municipalities, counties, Metropolitan Planning Organizations (MPOs), RMAs, and other customer groups	A

Part	Section	Contents	Required by
	Procedures	Procedures describing how the principal activities will be performed	A
	Quality Control	Quality control procedures including a resource table for monitoring and auditing all public information and communication services	A
		Procedures to ensure accuracy, completion, and quality in submittals to the Department, Governmental Entities, and customer groups	A
		Procedures to establish and encourage continuous improvement	A
	Audit	Name of Design-Builder's representative with defined authority for establishing, maintaining, auditing, and reporting on the PMP	A
		Names, titles, roles, and responsibilities of supporting quality management staff reporting to the person with defined authority	A
	Document Management	The manner in which records will be maintained in compliance with the Technical Provisions, including any specific systems that Design-Builder will use	A
		Document management procedures in compliance with Section 1 (*General Scope of Work*) of the Technical Provisions	A
5. Safety Plan			
	Organization	Policies, plans, training programs, Site controls, and Incident response plans to ensure the health and safety of personnel involved in the Project and the general public affected by the Project	B
		Procedures for immediately notifying the Department of all Incidents arising out of or in connection with the performance of the Work	B
	Personnel	Resource plan for the Design-Builder and its Subcontractors	B
		Arrangements for coordinating and managing staff interaction with the Department and its consultants, including collocation of Key Personnel and description of approach to coordinating work of offsite personnel	B
		Names and contact details, titles, job roles, and specific experience required for Key Personnel and for other principal personnel	B
		Names and contact details, titles, and job roles of principal personnel for Subcontractors and any third party with which Design-Builder will coordinate its activities	B
	Procedures	Safety Plan with the minimum requirements described in Attachment 01-2 (*Health and Safety – Safety Plan*)	B

Part	Section	Contents	Required by
	Incident Management Plan	Incident Management Plan intended to address unplanned events or incidents for significant projects to ensure Incident response operations within the Project are managed effectively. The plan identifies priorities and procedures for detection and response to Incidents with the goal of safeguarding the public and restoring traffic flow as quickly as possible. The plan should define a process of regular review and analysis to identify actions that will reduce Incident frequency and severity.	B
6. Communications Plan			
	The manner in which Design-Builder's organization will respond to unexpected requests for information, communicate changes or revisions to necessary Design-Builder personnel, and notify affected stakeholders before and after changes are made		A
	Processes and procedures for communication of Project information between Design-Builder's organization and the Department		A
7. Transportation Management Plan			
	The Transportation Management Plan at a minimum, the content described in Section 12.3 (*Transportation Management Plan*)		C
8. Preliminary L&A Plan			
	The revised Preliminary L&A Plan at a minimum the content described in Section 5.3.1 (*Preliminary Landscape and Aesthetic Plan*).		C

This page intentionally left blank.

ATTACHMENT 01-4
PROJECT SCHEDULE

This page intentionally left blank.

PROJECT SCHEDULE

General

Design-Builder shall prepare and submit Project Schedules as specified herein showing the order in which the Work is proposed to be carried out.

Project Baseline Schedule – This time-scaled, resource-loaded, and cost-loaded Critical Path Method (CPM) network shall depict the milestones, durations, sequences, and interrelationships that represent Design-Builder's Work plans; Design-Builder's work breakdown structure (WBS) for designing, constructing, and completing the Project; from the date of Notice to Proceed (NTP) 1 to Final Acceptance. Design-Builder shall organize the Project Baseline Schedule to conform to WBS Level IV for Design and Construction Activities.

Design-Builder shall not construe the approval of any schedule submitted to assign responsibility of performance or contingencies to the Department or relieve Design-Builder's responsibility to adjust forces, equipment, and work schedules as may be necessary to ensure completion of the Work within the Project Schedule Deadlines.

In addition to hard copies of plots and reports, Design-Builder shall submit the electronic copy of any Project Schedule in .xer or an approved compatible format, which can be accessed by the Department's current version of the Primavera scheduling program. The submittal of satisfactory supplemental Project Schedules, including Project Baseline Schedule, Project Status Schedule, and recovery schedule, shall be considered as a necessary portion of the Work.

The Project Status Schedule and recovery schedule shall not alter the logic previously established in the Project Baseline Schedule unless approved by the Department in writing.

Definitions

The following definitions shall apply to the Project Schedule:

Activity – A task that is a definable part of the overall project. The task must be performed in order to complete the work defined in the Contract. An Activity has interrelationships, and is measurable by resource and time.

Level IV – A WBS that depicts Activities by package/area/facility/craft/crew, establishes a sequence for and interrelationship between Activities, and allows tracking of Activity progress with its associated resources.

Revised Project Baseline Schedule – Incorporates revisions to the Project Baseline Schedule subject to the approval of the Department.

Total Float – The amount of time that an Activity may be delayed without delaying the Substantial Completion Date.

Updated Schedule – The most current schedule in effect, which incorporates actual progress and sequence of activities to date, projected completion dates and proposed logic changes for future work, and approved Change Orders and/or time extensions.

For definitions not specified in this Attachment 01-4, refer to Appendix 1 of the Contract.

Schedule Requirements

General

a) The work shall be scheduled to show the completion of the Contract within the Completion Deadlines.

b) Schedule start date shall be NTP1.

c) Design-Builder shall establish project specific calendars for the work. Design-Builder shall provide a list of non-work days, which include holidays and weather days. Holidays shall be established pursuant to the Contract. Additional holidays not recognized by the State of Nevada, such as union holidays, may be included as approved by the Department.

d) Design-Builder shall submit tabular reports detailing the Predecessors and Successors and a report sorted by Total Float with every schedule submittal except the weekly look-ahead schedule. Basic schedule and tabular reporting templates shall be submitted by Design-Builder.

e) All out of sequence logic conditions shall be corrected by adding new activities and relationships as opposed to deleting activities. Alternative approaches to correcting out of sequence activities shall be submitted and accepted by the Department prior to incorporating such corrections into the schedule.

f) Activities shall not be deleted from the schedule. If the scope of work associated with an Activity has been removed through a Change Order, Design-Builder shall set the Activity's duration to zero, change the status to complete, and add "DELETE" to the description.

g) Design-Builder shall establish the resource dictionary. The resource dictionary shall include labor and equipment. Labor may be represented by work crews, labor classifications, and/or individual names. If utilizing work crews, the composition of each crew shall be detailed and included as an appendix to the Project Baseline Schedule narrative report.

h) Design-Builder shall use the precedence diagramming methods. The WBS of the Project Baseline Schedule shall be formatted in a manner consistent with the requirements of the Contract Documents.

i) Failure to include any element of work required for performance of this Contract in the Preliminary Baseline Schedule, the Project Baseline Schedule, the Updated Schedule, or Revised Project Baseline Schedule will not excuse Design-Builder from completing work required to achieve Completion Deadlines, notwithstanding acceptance of schedule submittals.

j) Schedule submittals shall not be used to notify the Department of owner caused delays or to request additional contract time. Formal notice and requests are required per applicable Contract provisions. The Department's acceptance of a schedule that shows work being performed later than the Completion Deadline(s) shall not be construed as approval to extend the contract time.

Activity Requirements

a) A critical path Activity shall be defined as a current Activity located on the longest path. Not more than 50% of activities in the schedule can be critical or near critical. Near critical is defined as having a float value of five (5) days or less. The Design-Builder shall submit any proposed constraints in the schedule to the Department for approval.

b) Schedule activities shall be cost and resource loaded. Resource loading shall include all major equipment and hours for each resource. The resource dictionary shall be used to assign the required resources to each Activity. There shall be no more than one driving resource per Activity. All schedules shall be “scheduled” and “resource leveled” using the driving resources. The Activity ID numbering, scope of work, and descriptions of activities shall remain the same as the accepted Project Baseline Schedule.

c) The sum of all cost loaded activities shall equal the current Contract Price.

d) Activity descriptions shall briefly convey scope and location of work indicated. The description shall consist of a verb or work function (e.g.; form, pour, excavate), an object (e.g.; slab, footing), and area/location (e.g.; bent 200, northeast corner).

e) The schedules shall reflect any Department activities such as review times and third party activities.

f) The work activities shall be subdivided to identify the staging of construction through the use of coding structure within Primavera. The coding structure can use either the WBS or Activity code structures and shall subdivide area, sub-area, discipline, stage, phase, and reference to sheet and specification sections.

g) Work Activity durations shall not exceed 30 days in length for design activities and 14 days in length for construction activities. Exceptions would include procurement activities and Work activities that may be considered routine once they are initiated, as approved by the Department. No work Activity shall have an associated cost over $500,000, unless otherwise approved by the Department.

h) Should a work Activity require more than fifteen (15) calendar days, it shall be subdivided to appropriate work activities. The Department reserves the right to require more detailed sequences of work activities as deemed necessary to review the schedule or monitor the Work.

i) With the exception of the first (start) and the last (finish) milestone activities, all other activities shall be logically tied to appropriate predecessors and successors.

j) The Contract milestones dates and any Department furnished equipment availability date, as described in the Contract Documents, shall be unique zero duration activities containing corresponding dates and logic ties. These activities shall be designed as either "start" or "finish" milestones. Each milestone Activity shall constrain its dependent Work. Calculation of constraint dates for milestones shall assume NTP1 is given at day zero.

k) Leads or lags shall not be used when the creation of an Activity will perform the same function (e.g. concrete cure time). Lag durations shall not have a negative value. The use

of interrelation constraints such as leads and lags on activities shall be explained in the narrative and submitted to the Department.

l) Use of mandatory start or finish constraints, start on, expected finish and zero Total Float constraints shall not be used in the Project Baseline Schedule, Revised Project Baseline Schedule, Recovery Schedule, or Updated Schedules without the approval of the Department.

m) Design-Builder shall provide an analysis of the network diagram that includes the following information as a minimum for each Activity:

1. Preceding and succeeding event numbers
2. Activity description and number
3. Estimated duration of activities
4. Early start date (by calendar date)
5. Early finish date (by calendar date)
6. Late start date (by calendar date)
7. Late finish date (by calendar date)
8. Total Float
9. Activity constraints

n) Activities shall be coded to allow for the following summaries:

1. Responsible party for the accomplishment of each Activity, i.e., Design-Builder, Subcontractor, Department, or Utility Owner. Only one party can be responsible for an Activity.
2. Phase/stage during which Activity is planned to be accomplished, including design.
3. Area/location, i.e., bridges, ramps, or mainline station.

o) Material quantities for each Activity shall be indicated in the resource fields when they become available. Material descriptions such as concrete, asphalt, guide railing, and signs shall be used.

Schedule Submittals

Preliminary Project Baseline Schedule (90-Day Schedule)

For the first 90 Days following NTP1, the Design-Builder will proceed with Work as described in the Preliminary Project Baseline Schedule submitted by Design-Builder with its Proposal and as accepted by the Department.

Project Baseline Schedule

The Project Baseline Schedule shall contain Design-Builder's detailed activities and sequencing for all Work. It is essential that the Project Baseline Schedule present a clear understanding of the staging of construction. This shall be reflected in the coding structure in the schedule. Design-Builder shall, unless directed otherwise by the Department, use the Project Baseline Schedule as target for required comparisons to the current updates in tabular reports, bar charts, physical progress curves or any other comparisons requested by the Department.

The Project Baseline Schedule activities shall indicate Design-Builder's best estimate for original durations, early dates, late dates, logic ties, constraint dates, and Total Float. Activities shall be scheduled in the sequence Design-Builder intends to perform the work.

The Project Baseline Schedule must be consistent with the Preliminary Project Baseline Schedule submitted in Design-Builder's Proposal.

The Project Baseline Schedule shall contain the Activity sequence for major material and equipment procurement, including submittal preparation, reviews by the Department and others, fabrication, and delivery. Procurement items that may contain multiple submittals occurring at different times shall be divided into separate Activity sequences that can be tracked on an individual basis.

Design-Builder shall incorporate into the Project Baseline Schedule all Project activities, activities for procurement and delivery of materials and equipment, activities assigned to Subcontractors, Design Reviews, and all Utility Work or Work by other Subcontractors within or near the Site.

Design-Builder shall incorporate into the Project Baseline Schedule and Project Status Schedule the Department's Project ROW for the activities described in Section 21.3 (*Project ROW Acquisition Status*).

Activities shall include the Contract deliverables, such as Submittal of design documents, permit applications, material samples, shop drawings, working drawings, Inspection and Testing Plans, safety and security plans. Activities that may affect progress shall be reflected, as well as those of affected utility companies and other similarly involved third parties. Any such activities set forth in the Contract Documents shall be reflected on the Project Baseline Schedule.

Once the Project Baseline Schedule is accepted by the Department in accordance with the PMP, it shall become the basis for the Updated Schedule.

Design-Builder shall submit six copies of the Project Baseline Schedule in accordance with the requirements of Section 1.6.1.1.1 of the Technical Provisions and Section 3.2.2.1 of the Contract. Design-Builder shall designate at the time of submittal, in writing, an authorized representative who will be responsible for the preparation, revision, and updating of the Project Schedules. Design-Builder shall participate in review and evaluation sessions of the Project Baseline Schedule with the Department, as requested, and shall provide requested revisions to the Project Schedule within 10 Days.

Design-Builder shall provide a plot of the Project Baseline Schedule in an acceptable size, scale, and format showing the order and interdependence of activities and the sequence of work. Critical activities shall be distinguished on all reports by the use of color or other acceptable means. Successors may not be required for certain activities that are not on the Project Schedule Critical Path, if it can be reasonably assumed that the Activity in question is not critical and must be completed sometime before Substantial Completion Deadline for Final Acceptance Date.

Monthly Project Status Schedule

Design-Builder shall provide six copies of monthly Project Status Schedule and reports together with an electronic copy in .xer or approved format showing the activities, or portions of activities, completed during the reporting period. Design-Builder shall state the percentage of the Work actually completed and scheduled, the remaining duration, and the progress along the Critical

Path in terms of Days ahead or behind the allowable dates as of the report date. Design-Builder shall indicate any changes made to the Project Baseline Schedule. Changes to the baseline schedule will only be allowed as approved by the Department. Design-Builder shall participate in a review and evaluation of the monthly update with the Department, as requested, and provide requested revisions to the monthly update within 10 Days.

Failure to Provide an Acceptable Schedule

Any failure or delay in the submittal or approval of a Project Baseline Schedule, monthly Project Status Schedule, or recovery schedule shall not result in any time extension under the Contract.

ATTACHMENT 02-1
QUALITY MANUAL

This page intentionally left blank.

ATTACHMENT 02-1
QUALITY MANUAL

1. As a component of the Project Management Plan (PMP), Design-Builder's Quality Manager shall establish and maintain a comprehensive Quality Manual that describes the Quality Management System (QMS) for all aspects of the Project Work. The Quality Manual shall establish the quality policy and quality objectives for all aspects of the Work. It shall also describe the processes that are to be established, implemented, controlled, and continually improved to achieve the aforementioned quality objectives.

2. The quality objectives shall be specific and measurable, consistent with the quality policy and linked to meeting the needs and performance expectations of the Department with regard to the Project. The QMS described in the Quality Manual shall include all of the activities required to achieve these quality objectives, including project controls such as scope, cost, schedule, and general document control management activities. All of these activities shall be subject to internal and external quality audits.

3. The Quality Manual shall describe the organization and reporting relationships of Design-Builder-Related Entities involved in performing the Work and how key quality management activities such as the management of project controls, design, construction, traffic, and environmental activities shall interface with each other.

   The Quality Manual shall also provide an organizational chart showing the Department's Quality Oversight relationship with Design-Builder, and the responsibilities of all Design-Builder's Key Personnel involved with the Project. The Quality Manual shall also show how the various levels of QMS documentation are linked to each other.

4. The Quality Manual shall clearly define the reporting function and authority of Design-Builder's Quality Manager, who shall liaise with the Department and act as Design-Builder's single-point representative to the Department for all matters relating to quality management.

This page intentionally left blank.

ATTACHMENT 02-2
DESIGN QUALITY MANAGEMENT PLAN

This page intentionally left blank.

ATTACHMENT 02-2
DESIGN QUALITY MANAGEMENT PLAN

1. As a component of the Project Management Plan (PMP) and the Quality Management System (QMS), Design-Builder shall establish and maintain a comprehensive Design Quality Management Plan (DQMP) that describes how it will manage the design processes for the Project in accordance with the International Organization for Standardization (ISO) 9001:2008 standard, its Quality Manual, and the requirements of the Contract Documents, including Section 3 (*Design Quality Management*) of the Technical Provisions.

2. The DQMP shall contain an organizational chart for all design activities that expands on the organizational chart in the PMP and the Quality Manual, identifying personnel responsible for design management and their relationship with the Quality Manager, who is responsible for Design-Builder's overall QMS as documented in Design-Builder's Quality Manual. It shall also contain a description of the responsibilities, qualifications, and authority of the above personnel and the organizational interfaces between those responsible for design management and other engineering and construction management disciplines.

3. The DQMP shall, at a minimum, include or reference detailed procedures and detailed process flow charts for the following processes:

   a. The procedures to be used or designing and checking of the designs and the form of design review to be undertaken.

   b. The identification of the checking team.

   c. The contents and format of Design Document Submittals.

   d. A design and audit review schedule, including dates Design-Builder plans to:

      i. Conduct internal audits of the design verification process.

      ii. Submit design packages.

      iii. Undertake Design Review meetings with the Department.

   e. The process and schedule for road safety audits, including, but not limited to, performing an audit prior to opening a section of roadway to traffic.

   f. A drawing tree indicating the organization and hierarchy of Design-Builder's drawings.

   g. Suitable metrics to measure the progress of design for each discipline.

4. In addition, the DQMP shall, at minimum, include or reference detailed Quality System Procedures (QSPs) and detailed quality process flowcharts for the following processes and procedures that shall document who does the Work, and auditable evidence of compliance with the Contract Documents:

   a. Design input and output review.

   b. Design verification to ensure that design input requirements have been met.

   c. Design validation to ensure that the completed design is compliant with the Contract Documents and suitable for its intended use.

d. Design changes.

e. Quality assessment and procurement of Design-Builder-Related Entities responsible for design.

f. External quality audits of Design-Builder-Related Entities responsible for design.

g. Internal quality audits of quality assurance (QA) and quality control (QC) processes.

h. Corrective actions, preventive actions, and opportunities for improvement.

i. Control of quality records.

j. Document management.

ATTACHMENT 02-3
CONSTRUCTION QUALITY MANAGEMENT PLAN

This page intentionally left blank.

ATTACHMENT 02-3
CONSTRUCTION QUALITY MANAGEMENT PLAN

1. As a component of the Project Management Plan (PMP) and the Quality Management System (QMS), Design-Builder's Quality Manager shall establish and maintain a comprehensive Construction Quality Management Plan (CQMP) that describes how it will manage the construction activities in accordance with the International Organization for Standardization (ISO) 9001:2008 standard, its Quality Manual, and the requirements of the Contract Documents, including Section 4 (*Construction Quality Assurance, Quality Control, and Oversight*) of the Technical Provisions.

2. The CQMP shall contain an organizational chart, which expands upon the organizational chart of the Quality Manual, identifying personnel responsible for construction management and their relationship with the Quality Manager for the Design-Builder's overall QMS as documented in Design-Builder's Quality Manual. It shall also contain a description of the responsibilities, qualifications, and authority of the above personnel and the organizational interfaces between those responsible for the Work, including construction management and other disciplines such as design management, environmental, and traffic management.

3. The CQMP shall, at a minimum, include or reference detailed Quality System Procedures (QSPs) and detail process flowcharts for the following processes:

   a. Construction safety audits.

   b. The process and schedule for work zone safety audits.

   c. Inspection, testing, and monitoring.

   d. Materials identification and traceability.

   e. Quality assessment and procurement of Design-Builder-Related Entities responsible for construction.

   f. External quality audits of DB-Related Entities responsible for Construction Work.

   g. Internal quality audits.

   h. Control of Nonconforming Work.

   i. Corrective actions, preventive actions, and opportunities for improvement.

   j. Document management.

   k. Control of quality records.

   l. The above procedures and flowcharts shall document who does the Work, what they do, and what provide evidence they have done the Work correctly.

4. The CQMP shall also include and/or reference an Inspection and Testing Plan. The Inspection and Testing Plan shall, at a minimum, include:

   a. Description of the operations or stage of Work.

   b. Description of the inspection, calibration, sample, test or trail activity (at what stage the inspection or test take place), and monitoring activity.

c. Frequency, number, and time schedule of inspections, calibration, sample, test and monitoring for both QC and QA.

d. Reference to Project Standards, codes, specifications, and acceptance criteria.

e. Specified testing and inspection procedures and applicable checklists and reports.

f. Personnel or agency responsible for inspection, calibration, sample, test, trail activity, and monitoring activity.

g. QA review, all hold points and witness points.

h. When applicable, description and frequency of geotechnical instrumentation.

i. Monitoring and adherence to acceptance criteria and other records.

j. Witness and hold points, including who is the responsible party (includes Designer and the Department).

k. The steel fabricator's QC program outlining the QC tasks to be performed and identifying the individuals responsible for performing the QC tasks.

l. Concrete QC plan, revisions and weekly reports that address the production, QC testing, transport, contingency plans for equipment breakdown or inclement weather, placement, finish, and cure of Portland cement concrete for foundations, abutments, superstructures, decks, drainage structures, pavement and other pours over 100 yd^3 ($75m^3$).

m. Design support during construction review points.

ATTACHMENT 02-4
TRAFFIC QUALITY MANAGEMENT PLAN

This page intentionally left blank.

ATTACHMENT 02-4
TRAFFIC QUALITY MANAGEMENT PLAN

1. As a component of the Project Management Plan (PMP) and the Quality Management System (QMS), Design-Builder shall provide a comprehensive Traffic Quality Management Plan (TQMP) that describes how it will administer the Project's traffic management processes in accordance with the International Organization for Standardization (ISO) 9001:2008 standard, its Quality Manual, and the requirements of the Contract Documents, including Section 12 (*Maintenance of Traffic During Construction Period*) of the Technical Provisions. The TQMP is to apply throughout Design and Construction, and all traffic personnel of Design-Builder and those of Design-Builder-Related Entities shall comply with the Quality Manual, this TQMP, and the processes and procedures that are part of this TQMP.

2. The TQMP shall contain an organizational chart, which expands upon the organization chart of the Quality Manual, identifying personnel responsible for traffic management and their relationship with the Maintenance of Traffic (MOT) Manager, the Quality Manager, and for Design-Builder's overall Quality Management System (QMS) as documented in Design-Builder's Quality Manual. It shall also contain a description of the responsibilities, qualifications, and authority of the above personnel and the organizational interfaces between those responsible for traffic management and other disciplines such as design management, construction management, and environmental management. The TQMP shall address the manner in which traffic management relates to Project Design and Construction.

3. The TQMP shall, at a minimum, include or reference detailed Quality System Procedures (QSPs) and process flowcharts for the following processes:

   a. Significant processes outlined in Design-Builder's Transportation Management Plan (TMP) and associated sub-plans.

   b. External quality audits of Design-Builder-Related Entities responsible for traffic management.

   c. Internal quality audits.

   d. Management of Nonconforming Work.

   e. Corrective actions and preventive actions.

   f. Document management.

   g. Control of quality records.

4. The above procedures and flowcharts shall document who does the Work, what they do, and what evidence is generated that they have done the Work correctly. When the above processes are already covered as part of another QMP, the process heading still needs to be identified as part of the TQMP; however, the details can be minimized to a reference to the other QMP and section or paragraph where the details are provided. The referenced QMP and section or paragraph must indicate specific requirements with regard to the above processes as it relates to traffic quality management. Notwithstanding the above, processes that fall within the specific requirements of the TMP must include detailed QSPs and process flowcharts under the TQMP.

This page intentionally left blank.

ATTACHMENT 02-5
ENVIRONMENTAL QUALITY MANAGEMENT PLAN

This page intentionally left blank.

ATTACHMENT 02-5
ENVIRONMENTAL QUALITY MANAGEMENT PLAN

1. As a component of the Project Management Plan (PMP) and the Quality Management System (QMS), Design-Builder shall provide a comprehensive Environmental Quality Management Plan (EQMP) that describes how it intends to manage the environmental components of the Project in accordance with the International Organization for Standardization (ISO) 9001:2008 standard, its Quality Manual, the requirements of the Contract Documents, and Environmental Management System (EMS), and the Environmental Compliance Management Plan (ECMP). The EQMP is to apply throughout the term of the Contract.
2. The EQMP shall contain an organizational chart that expands upon the organizational chart of the Quality Manual, identifying personnel responsible for environmental management and their relationship with the Environmental Compliance Manager (ECM), the Quality Manager, and Project Manager for Design-Builder's overall QMS as documented in Design-Builder's Quality Manual. It shall also contain a description of the responsibilities, qualifications, and authority of the above personnel and the organizational interfaces between those responsible for environmental management and other discipline such as management of Project Design and Construction.
3. Design-Builder shall appoint an ECM meeting the qualifications as described in Section 1.6.3 (*Key Personnel*) who shall be responsible for the EQMP and who shall report to the Quality Manager.
4. The EQMP shall include or reference detailed Quality System Procedures (QSPs) and process flowcharts for the following processes:
   a. Satisfying and ensuring compliance with Design-Builder's environmental obligations, including compliance with the EMS and in particular, the preparation and implementation of an ECMP and specific plans as may be detailed elsewhere in the Contract Documents.
   b. Obtaining and maintaining applicable permits, licenses, and approvals.
   c. Environmental monitoring and reporting.
   d. Environmental incident reporting and tracking.
   e. External quality audits of Design-Builder-Related Entities responsible for environmental aspects of the Project.
   f. Internal quality audits.
   g. Control of Nonconforming Work.
   h. Corrective actions, preventive actions, and opportunities for improvement.
   i. Document management.
   j. Control and retention of quality records.

The above procedures and flowcharts shall document who does the Work, what they do, and what evidence is generated that they have done the Work correctly.

1. The Department, in the course of its review, shall pay special attention to Design-Builder's EQMP to verify that Design-Builder has taken full responsibility for all of the environmental requirements as specified for the Project.

This page intentionally left blank.

ATTACHMENT 05-1
LANDSCAPE AND AESTHETICS REQUIREMENTS

This page intentionally left blank.

PROJECT NEON DB 1-4 LANDSCAPE AND AESTHETICS REQUIREMENTS

NEVADA DOT

This page intentionally left blank.

TABLE OF CONTENTS

Table of Contents i

Use of Landscape and Aesthetics Requirements iii

Introduction to Meadows Redux v

1.0 Bridge Aesthetics 1-1

2.0 Wall Aesthetics 2-1

3.0 Groundplane Treatments 3-1

4.0 Vegetation 4-1

5.0 Sculptural/Artistic Features 5-1

6.0 Color Palette 6-1

7.0 Local Agency Project Infrastructure 7-1

USE OF LANDSCAPE & AESTHETICS REQUIREMENTS

GENERAL

These landscape and aesthetic (L&A) requirements shall supplement the project technical specifications and shall be used by project developers to guide the aesthetic design of the Project NEON DB 1-4. These requirements set the aesthetic expectations for the project and allow for innovation in achieving project requirements. These requirements set the design parameters and prescribe design templates in the project corridor for mainlines, gateways, interchanges, and remnant parcels to specific architecture and landscape architecture components. The components represented in these requirements were selected to relate to one another through massing, colors, materials, and graphic elements to create an overall aesthetic that supports the Meadows Redux design theme.

These requirements illustrate the application of L&A elements for the thematic character chosen for the project. The L&A theme is Meadows Redux as described in the Project NEON Landscape and Aesthetics Requirements Report by NDOT listed in the Technical Provisions Section 26 (Standards and References).

These requirements lay out the application of the theme elements. The Design-Builder shall design a compatible set of artistic impressions of the theme.

The following sections address Bridge Aesthetics, Wall Treatments, Groundplane Treatments, Vegetation, Sculptural/Artistic Features, and Color Palette.

Placement of L&A elements shall be defined by a hierarchy of treatment levels:

- **Standard**– the base elements throughout the corridor (base color and texture)
- **Accentuated**– areas where the traveling public will view an area as pleasing rather than mundane
- **Focal**– areas to draw attention or that will have focused attention
- **Landmark**– big theme L&A treatments

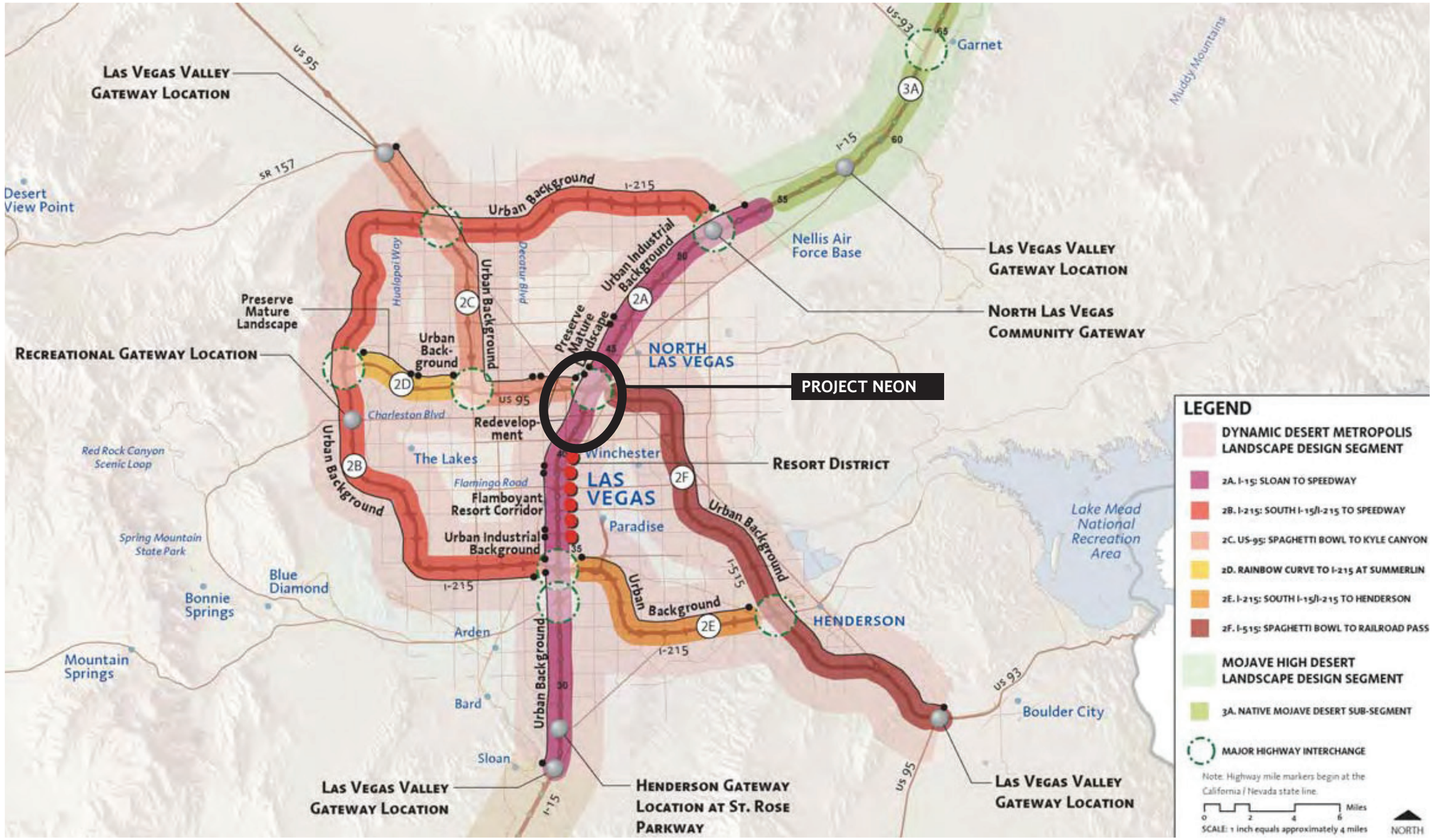

I-15 CORRIDOR PLAN

LAS VEGAS METROPOLITAN AREA

Dynamic Desert Metropolis Landscape Design Segment

INTRODUCTION TO MEADOWS REDUX

MEADOWS REDUX: A HISTORY

Beginning in May 2000, the State of Nevada through the State Transportation Board and NDOT began a planning process to create a vision for the state highway system that would satisfy the need for L&A considerations throughout the state. It was recognized that the state highways represent an opportunity to demonstrate the images, history, peoples, and climate that make Nevada a unique place.

Pattern and Palette of Place: A Landscape and Aesthetics Master Plan for the Nevada State Highway System (NDOT, 2002) established the framework for developing corridor studies. *The I-15 Landscape and Aesthetics Corridor Plan* (NDOT, 2005) describes a comprehensive vision for L&A within the corridor from Primm on the California border to Mesquite on the Utah border, a stretch that includes the project. The project falls within the Dynamic Desert Metropolis area identified in the corridor plan.

In 2006, the *Project NEON Aesthetics and Landscape Requirements Report* was completed. The report provides the State's past planning efforts, presents the development of conceptual themes, and details design options for structural and landscape aesthetics for the project. Three project themes were developed and presented at a public open house at which the public provided input into the theme selection.

The selected theme, Meadows Redux, seeks to bring back to the center of Las Vegas the meadow imagery for which the city was named. Grassland meadows characterize the aesthetic theme on structures and in the landscape. Mojave flora and fauna are overlaid on this Meadows Redux theme, supporting the diversity of images and plant material. Traveling the corridor from north to south, at the US 95 and I-15 intersection one encounters desert landscape and painted images. This theme transitions to the meadow/grassland theme provided in the *Project NEON Aesthetics and Landscape Requirements Report*. The farther south one travels in the corridor, the "wetter" the grassland imagery appears until reaching the oasis with palm plantings at the I-15 Sahara Avenue interchange.

Images of flora and fauna supporting the theme shall be expressed on structures and wall treatments. Bridge architecture shall have strong forms, and bridge rails, columns, and abutment/wing walls shall have aesthetic treatments. Fences and railings associated with the structures shall echo the Meadows Redux patterns. At key focal points, sculptural and lighting accents shall highlight gateways into city streets.

"A vision for the State Highway System: We envision a system of state highways that reflects the land and people of Nevada. We believe that Nevada should have highways that are aesthetically pleasing, as well as safe and cost effective. Therefore, no state highway is complete until landscape and aesthetics are considered and addressed."

-NDOT, Pattern and Palette of Place: A Landscape and Aesthetics Master Plan for the Nevada State Highway System

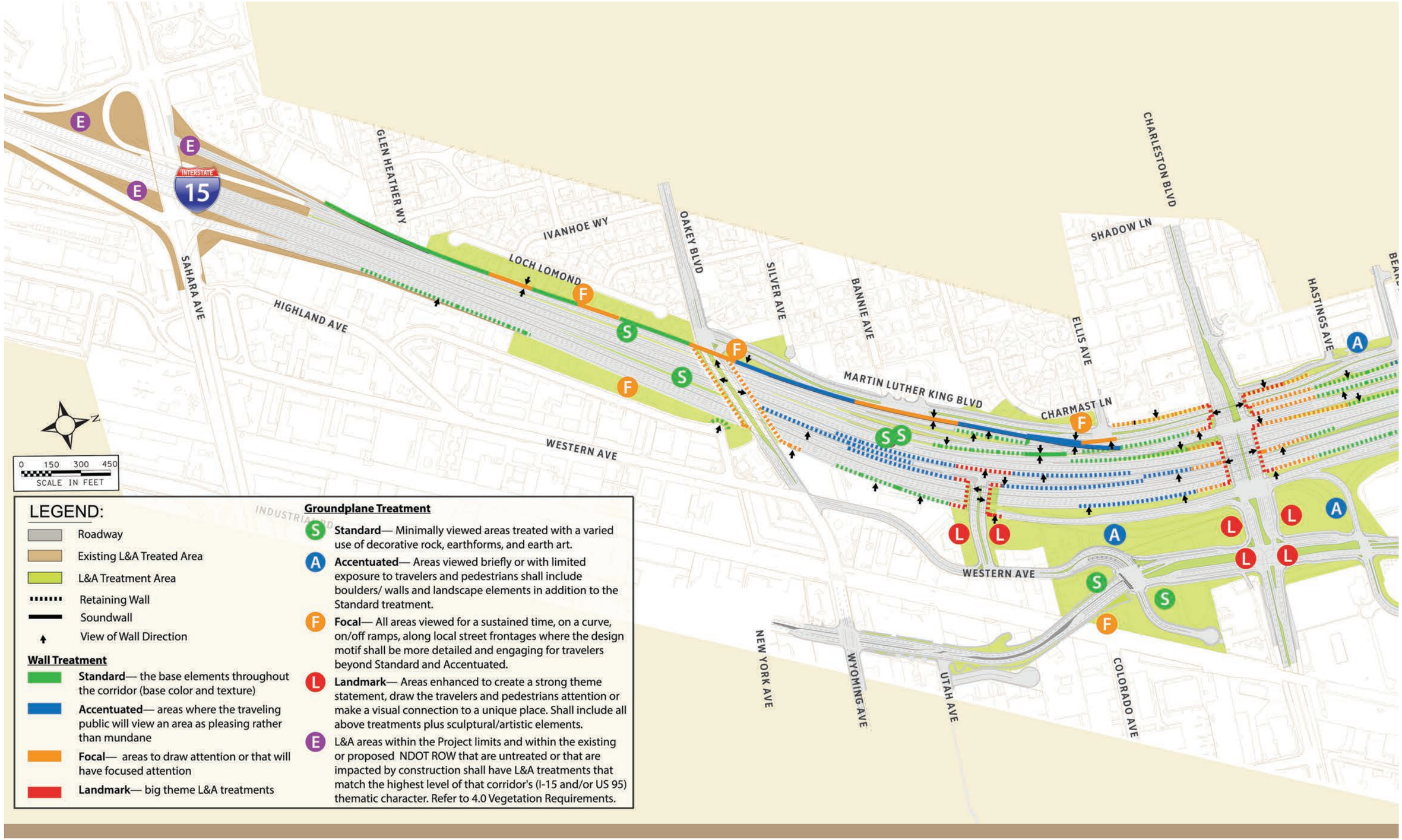
INTERSTATE 15
SAHARA AVE
HIGHLAND AVE
GLEN HEATHER WY
IVANHOE WY
LOCH LOMOND
OAKEY BLVD
SILVER AVE
BANNIE AVE
ELLIS AVE
SHADOW LN
CHARLESTON BLVD
HASTINGS AVE
MARTIN LUTHER KING BLVD
CHARMAST LN
WESTERN AVE
INDUSTRIAL RD
NEW YORK AVE
WYOMING AVE
UTAH AVE
COLORADO AVE
N
0 150 300 450
SCALE IN FEET
LEGEND:
Roadway
Existing L&A Treated Area
L&A Treatment Area
Retaining Wall
Soundwall
View of Wall Direction
Wall Treatment
Standard— the base elements throughout the corridor (base color and texture)
Accentuated— areas where the traveling public will view an area as pleasing rather than mundane
Focal— areas to draw attention or that will have focused attention
Landmark— big theme L&A treatments
Groundplane Treatment
S Standard— Minimally viewed areas treated with a varied use of decorative rock, earthforms, and earth art.
A Accentuated— Areas viewed briefly or with limited exposure to travelers and pedestrians shall include boulders/ walls and landscape elements in addition to the Standard treatment.
F Focal— All areas viewed for a sustained time, on a curve, on/off ramps, along local street frontages where the design motif shall be more detailed and engaging for travelers beyond Standard and Accentuated.
L Landmark— Areas enhanced to create a strong theme statement, draw the travelers and pedestrians attention or make a visual connection to a unique place. Shall include all above treatments plus sculptural/artistic elements.
E L&A areas within the Project limits and within the existing or proposed NDOT ROW that are untreated or that are impacted by construction shall have L&A treatments that match the highest level of that corridor's (I-15 and/or US 95) thematic character. Refer to 4.0 Vegetation Requirements.

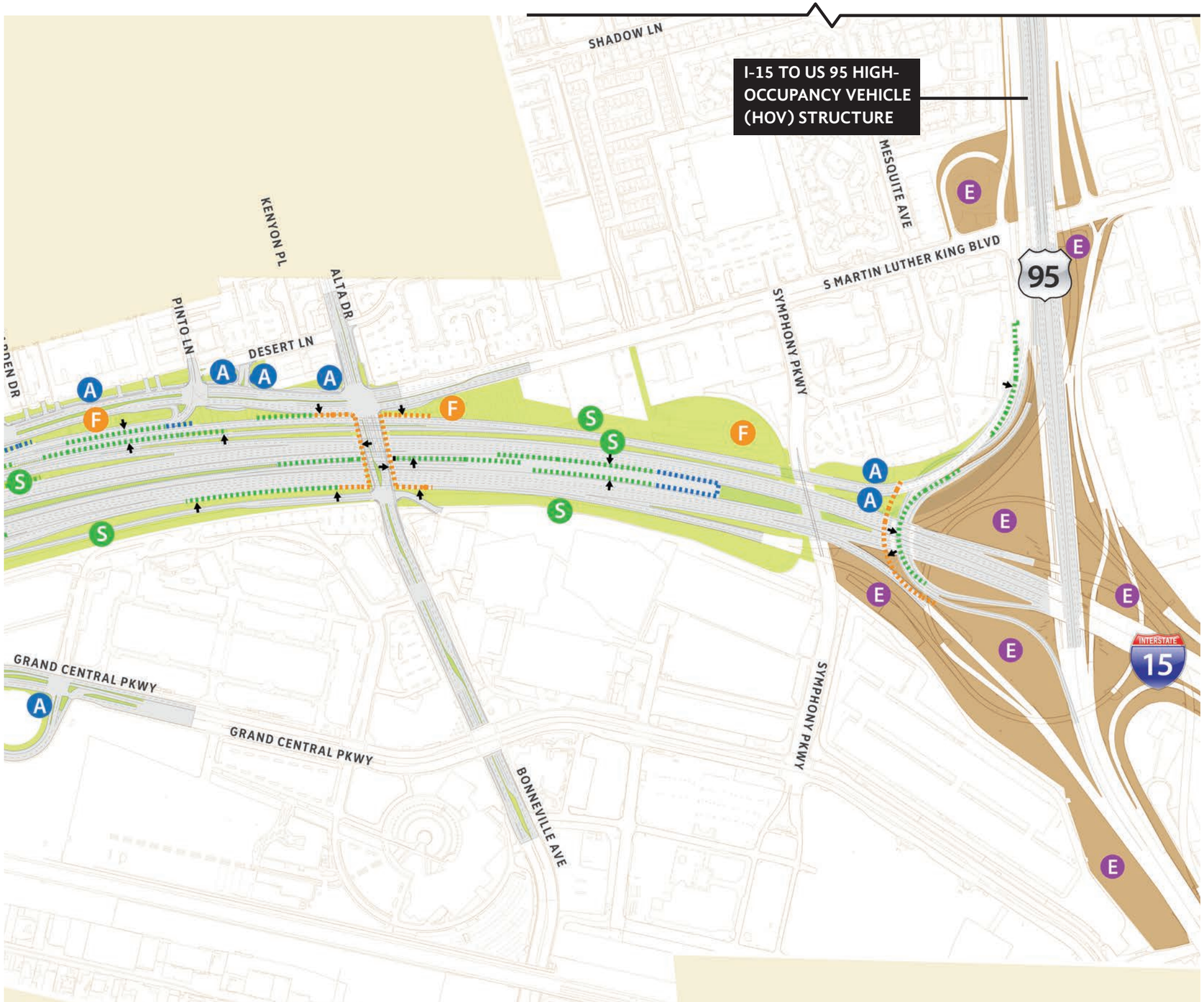
I-15 TO US 95 HIGH-OCCUPANCY VEHICLE (HOV) STRUCTURE
SHADOW LN
MESQUITE AVE
S MARTIN LUTHER KING BLVD
95
KENYON PL
ALTA DR
PINTO LN
DESERT LN
SYMPHONY PKWY
GRAND CENTRAL PKWY
GRAND CENTRAL PKWY
BONNEVILLE AVE
SYMPHONY PKWY
INTERSTATE
15

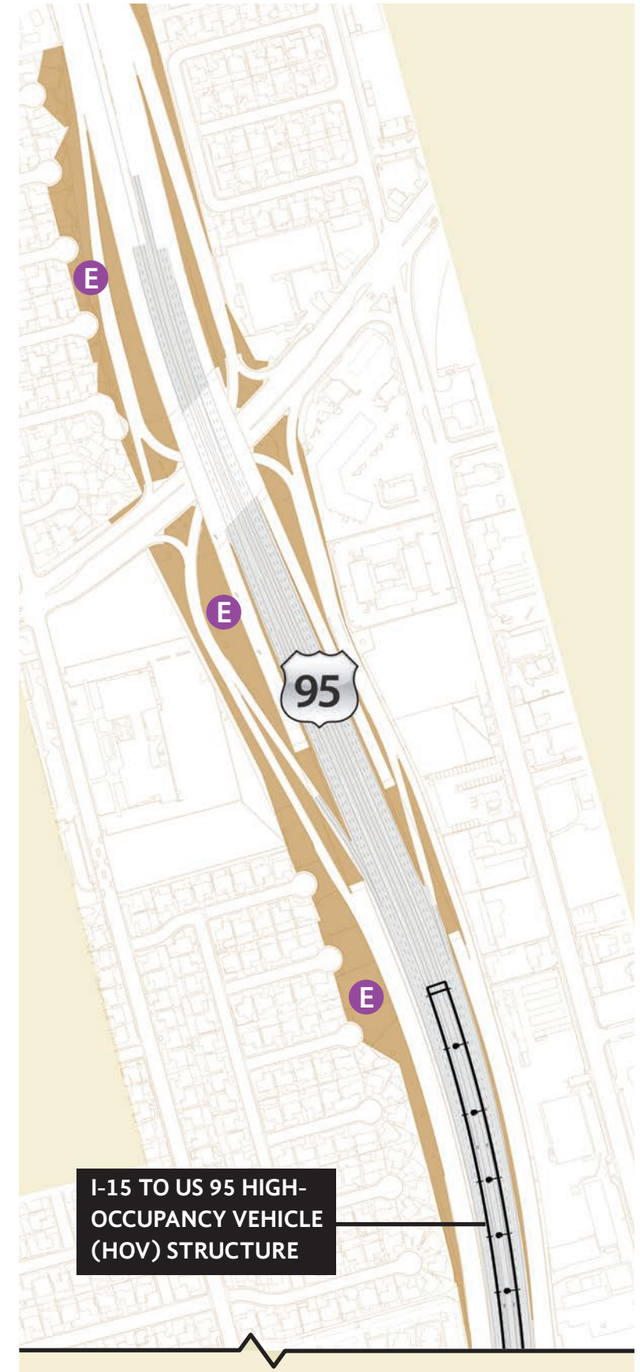
95
I-15 TO US 95 HIGH-OCCUPANCY VEHICLE (HOV) STRUCTURE

1.0 BRIDGE AESTHETICS

This page intentionally left blank.

1.0 BRIDGE AESTHETICS

Typical Bridge Elements

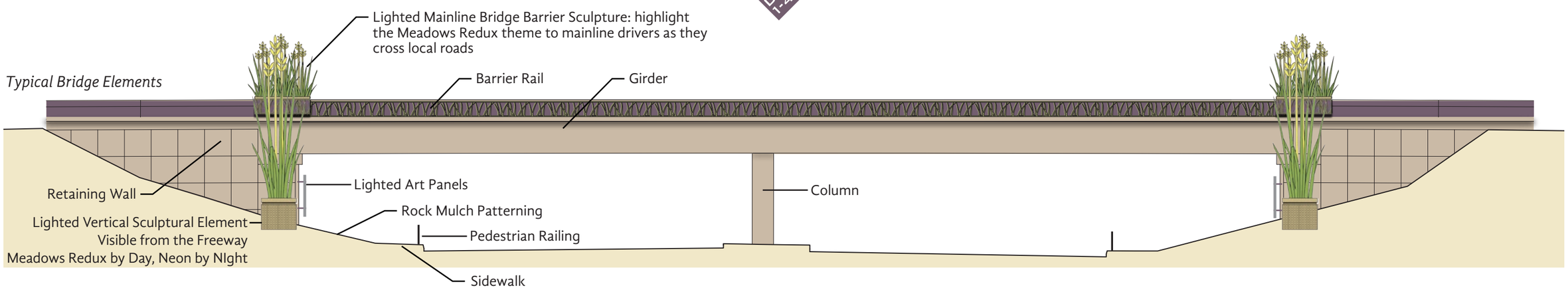

Bridge Map

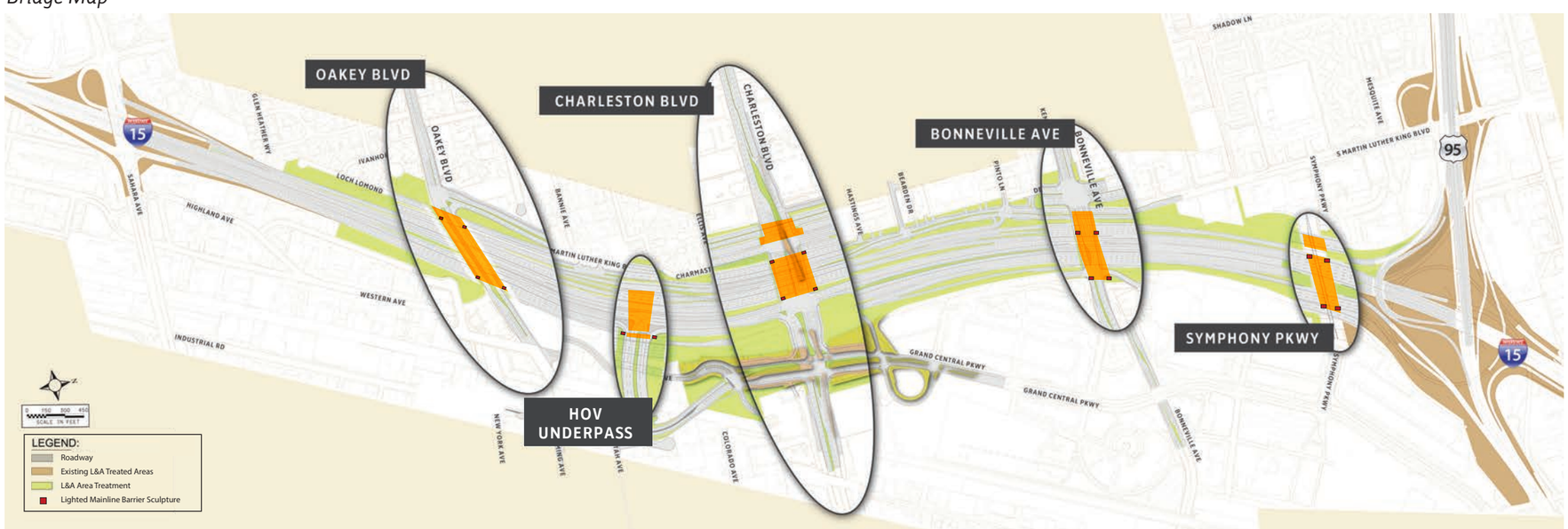

VISION

Good bridge engineering and aesthetics should be synonymous. Beauty is not simply a matter of taste alone. When qualities such as proportion, order, and symmetry are applied well, people typically often agree the object has aesthetic value; when applied poorly, they generally agree it does not. Aesthetics should be an integral part of design and must be considered both in the general form and in the details that support it. The parts must be considered as contributing to the whole.

DESIGN INTEGRITY

A well-designed bridge is the product of design decisions that are in alignment with one another, with one result being that the design has integrity. Myriad options are available to design, express, and highlight structural form.

Scale: Scale refers to the size relationships among features of the bridge structure and between the bridge structure and its surroundings. Because most design relates to things that will be used by people, a connection exists between the human body and designed objects. Structures that respond to the size of the human form are often referred to as having human scale. Highways have a larger scale because they are built for vehicles moving at high speeds. Highway elements such as piers or girders can be very large but appear "in scale" with the highway environment. Conflicts in scale become apparent when pedestrian accommodations are integrated into the highway environment. Ways must then be found to humanize the scale of the pedestrian portion of the bridge structure so that the structure operates at both scales.

Proportion: Proportion creates a sense of order by assigning appropriate relative sizes to different elements. The goal of good design is to achieve appropriate proportions among the parts of a structure: between its height, width, and depth; between solids and voids; between surfaces and openings; and between areas of sunlight and shadow. Proportion can suggest the order of significance of the elements or the roles played by the elements in the structure. Surface textures and colors also contribute to the sense of proportion.

- Meadows Redux formliner motif along bridge barrier with two accent colors shall extend along the entire length of bridge structures and the approach slab.
- Meadows Redux formliner motif along bridge barrier rail with two accent colors shall be used for 30 feet on either side of bridge columns on the I-15/US 95 HOV Connector.

Harmony, Contrast, and Rhythm: Harmony results when design elements have visual similarity and a complementary relationship. If planes or lines in a design have more dissimilar characteristics than similar characteristics, they are generally not perceived as being harmonious. Contrast relieves the monotony of simple harmony by juxtaposing the characteristics of some design elements with their opposites. Contrast often takes the form of dramatic differences in color or light and shadow. A dominant theme is essential in organizing the design into a pleasing aesthetic experience. Rhythm creates a sense of order by repeating similar elements in, on, or around a structure. These elements create a pleasing natural flow. On bridges, rhythms may be created by the spacing of light poles, spacing posts within a railing, and applying surface texture and color.

Color: Color can be applied to define, clarify, modify, accentuate, or subdue the visual effects of structural elements. Warm colors tend to emphasize the presence and size of forms, whereas cool colors diminish the visual importance of the elements to which they are applied. Colors are perceived differently throughout the day and during various seasons because of the position of the sun and atmospheric conditions. Colors are also influenced by the background against which they are seen, and their appropriateness is often judged in terms of their fit with their background. Background is particularly important for highway color selections because the highway element is generally a very small part of a much larger scene.

Texture: Texture helps define form through subtle surface variations and shadings. Texture can be used to soften or reduce imposing scale, add visual interest, and introduce human scale to large objects such as piers, abutments, monuments, and retaining walls. Distance and motion alter the perception of texture. When viewed from a distance or at high speeds, fine textures blend into a single tone and appear flat. The greater the distance, the higher the observer's speed, or the larger the object to which it is applied, the coarser or larger the texture must be to stand out.

DEFINED HIERARCHY OF TREATMENT LEVELS

Standard
Base color and texture, accent colors

Accentuated
Repeating pattern of Meadows Redux motif, accent colors or appliqués

Focal
Meadows Redux motif on barrier rail on bridges and on sections of barrier rail over columns on HOV structure

Landmark
Bridge barrier rails or columns: enhanced to carry out a strong theme statement, draw the traveler's attention, or make a visual connection to the unique place and/or history

I-15 to US 95 HOV Structure

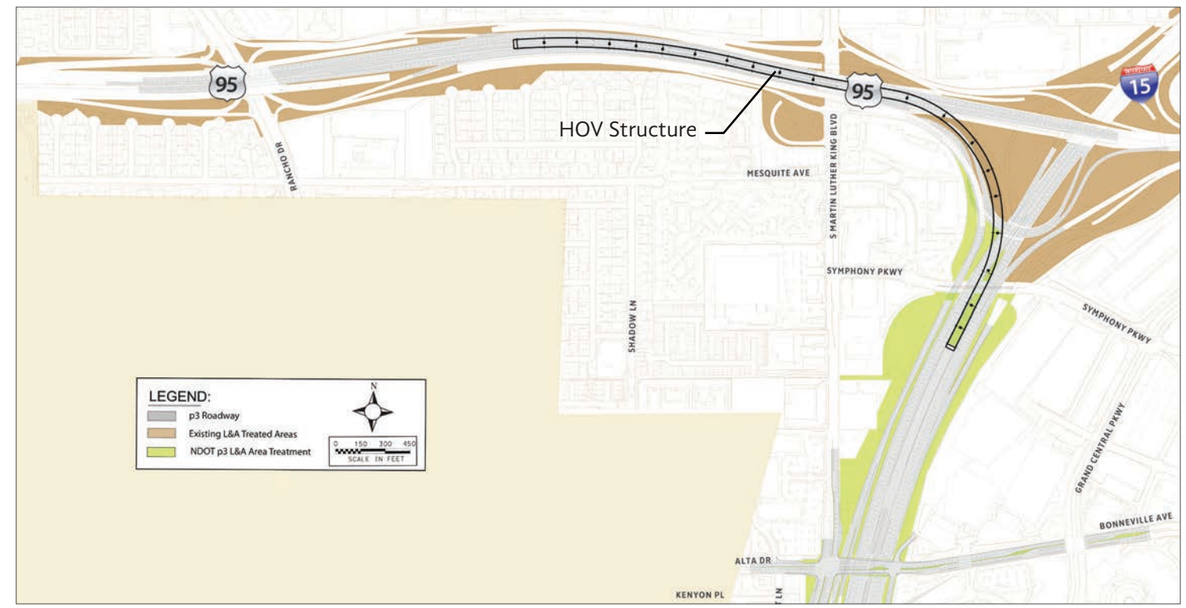

HOV Structure Elements

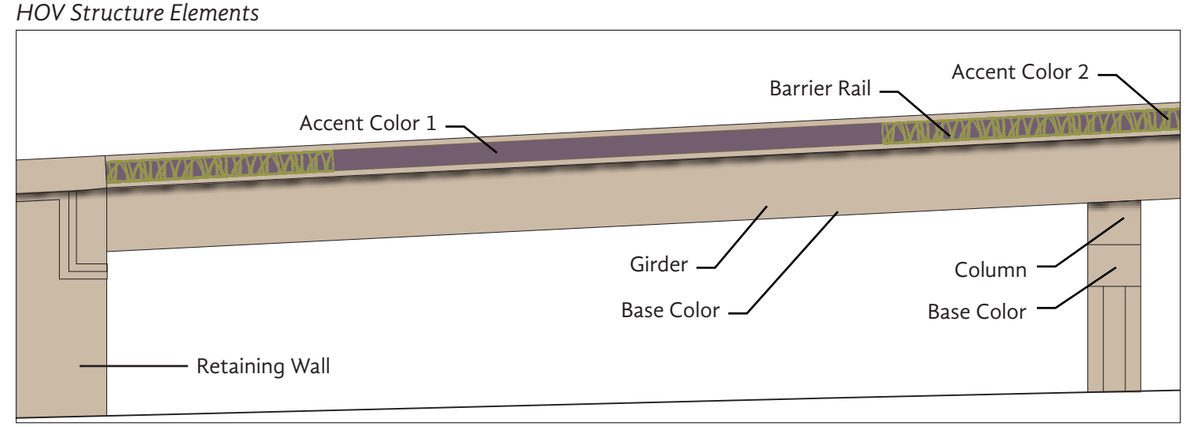

BRIDGE ELEMENTS

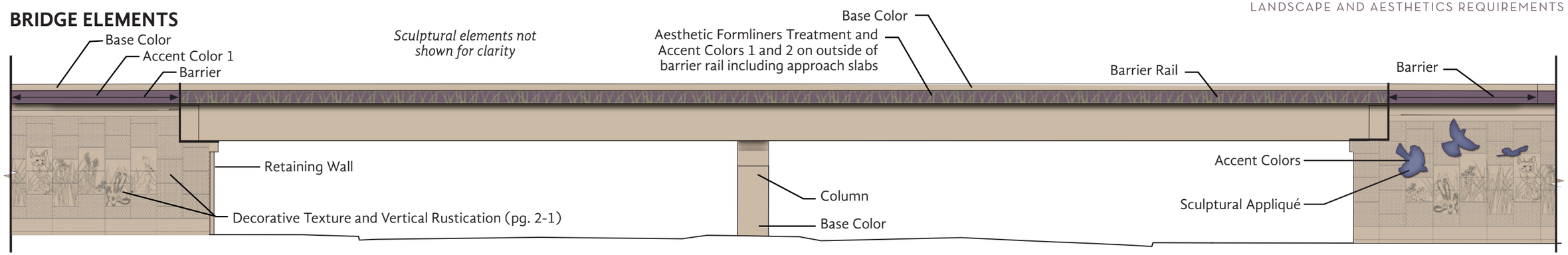

DESIGN CHARACTER

Meadows Redux Grasses and Flowers:
Mojave Fauna
Mojave Flora
Hierarchy Landmark Treatment:
HOV/NEON Gateway
Charleston Boulevard
Focal Treatment:
Bonneville Avenue/Alta Drive

COLOR PALETTE (see Section 6.0)

Base Color:
DE 6130 Wooded Acre
Accent Colors:
DE 5978 Plum Wine
DE 5537 Woodland Walk
DE 5914 Bossa Nova Blue

PEDESTRIAN RAILINGS

Pedestrian railings shall be used for pedestrian safety and directional control.

SIDEWALKS

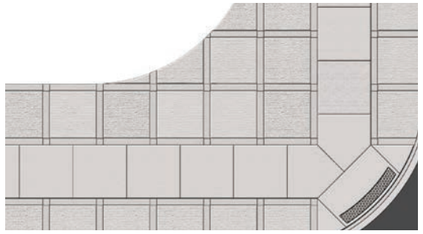

Sidewalks shall be standard finish and accessible, 6 feet to 8 feet wide or greater. The remaining sidewalk area shall be scored or textured under the bridges and at intersections.

MEDIAN & MEDIAN BARRIERS

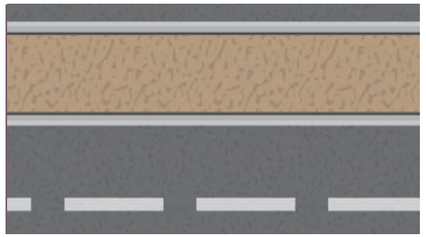

Medians under bridge structures shall be stamped concrete or pavers that are base color and textured.

EXISTING SLOPE PAVE

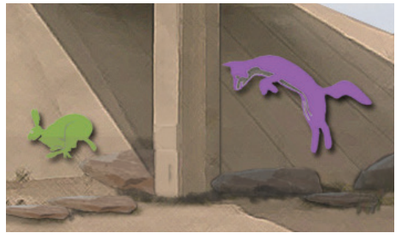

Slope pave shall be base color with accent color patterning and sculptural appliqués.

UNDERPASS ART PANELS

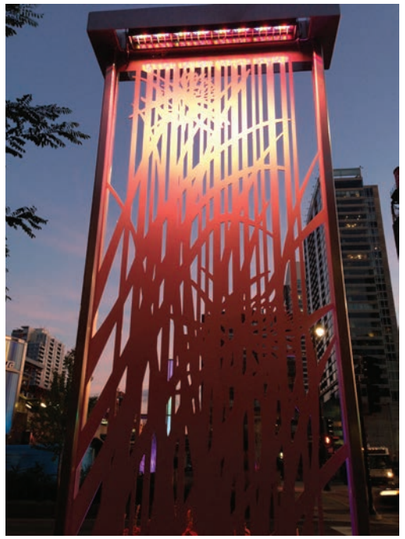

A series of lighted art panels under bridge overpasses shall enhance pedestrian safety and experience.

SCULPTURAL APPLIQUÉS

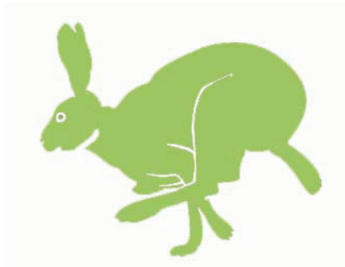

Sculptural appliqués promoting the Meadows Redux theme and accent colors shall be applied to walls to provide scale, proportion, contrast, and interest.

- All highway structure elements shall be painted with the base color.
- Accent colors shall be used in a composition to visually reinforce structural elements on bridges.
- Accent colors shall be used to highlight structural aspects in high-visibility areas.
- Abutment walls with properly scaled aesthetic images, formliners and vertical rustication shall provide a strong visual anchor for the bridge.
- A consistent horizontal span across the bridge length shall be provided on either side of bridge column set back from the edge to provide a strong shadow line to the bridge girder.
- Center columns shall be well-proportioned to the overall bridge.
- Lighted mainline bridge barrier sculptures shall be placed on the outside mainline bridge rail, where the mainline crossing consists of multiple bridges.
- Pedestrian rails, as shown on the civil drawings, control pedestrian crossings along amenity zones and sidewalks, under bridges, and along medians.
- Pedestrian rail in amenity zone on sidewalk under bridges and in medians where shown on civil shall control pedestrian from crossing.

- The minimum exposed retaining abutment wall height shall be 10 feet at a minimum for a 50-foot length to allow for expression of the corridor theme on walls.
- Aesthetic treatment of the bridge barrier rail shall appear integrated into the approach barrier.
- Bridge barrier rail treatment shall include a minimum of two accent colors.
- Apply appliqué elements and wraps on three columns in accented/focal areas (see map on page vii).

BARRIER RAILS AND GIRDERS

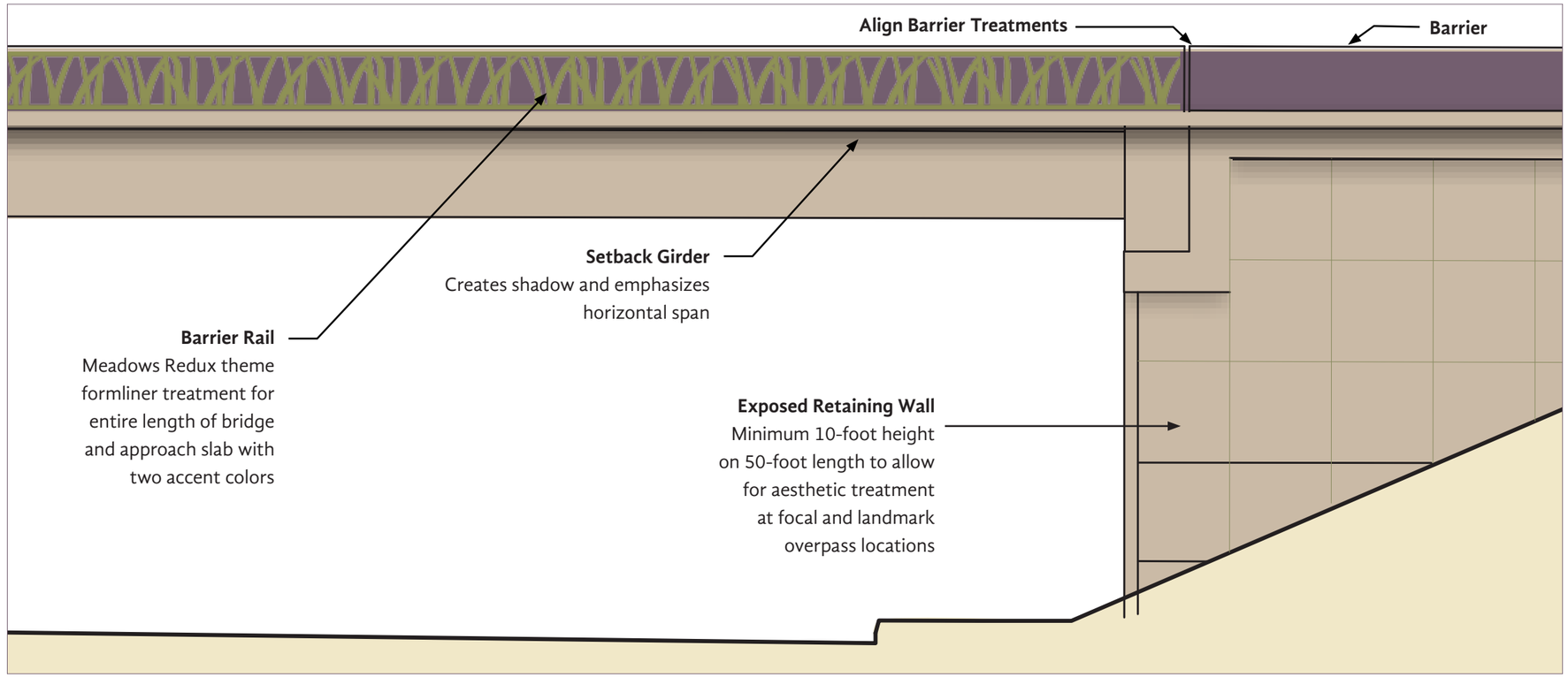

Barrier Rail and Girder at Abutment

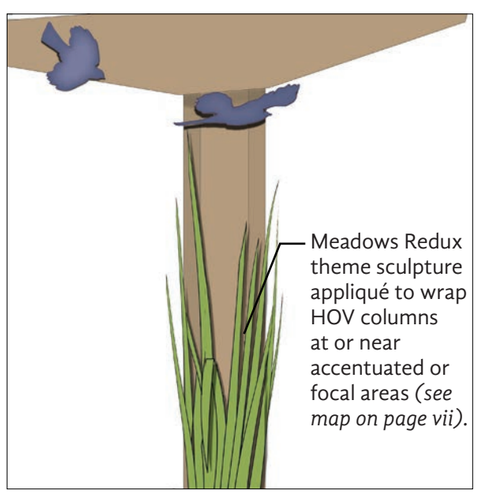

Appliqué Treatments

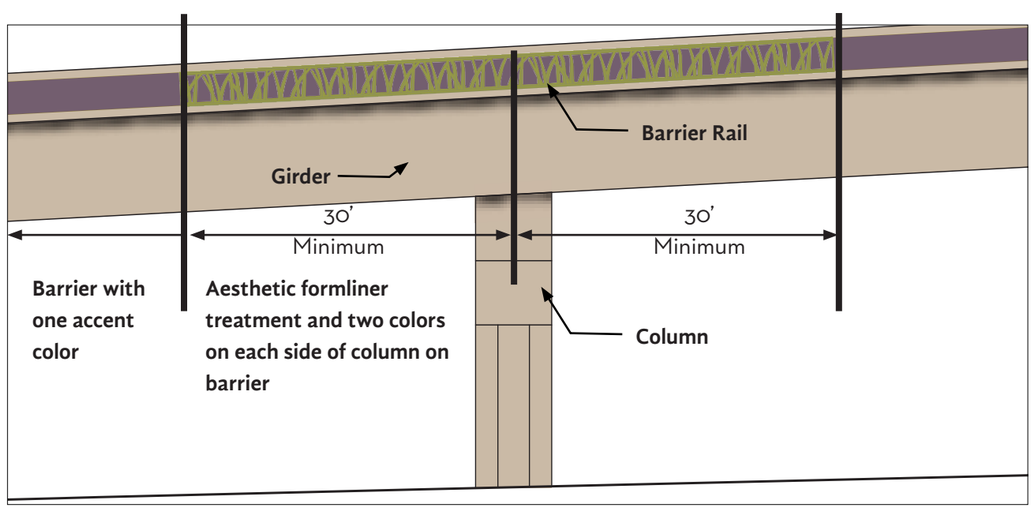

Barrier Rail on HOV Structure

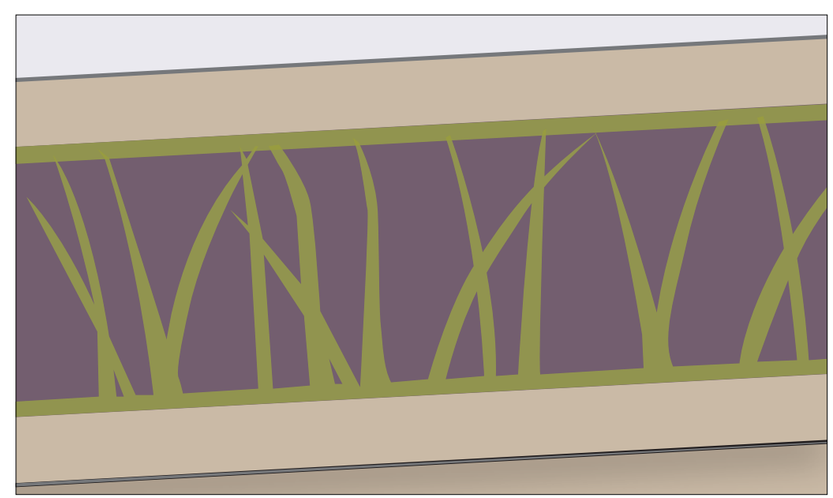

Aesthetic Treatment for Barrier Rail

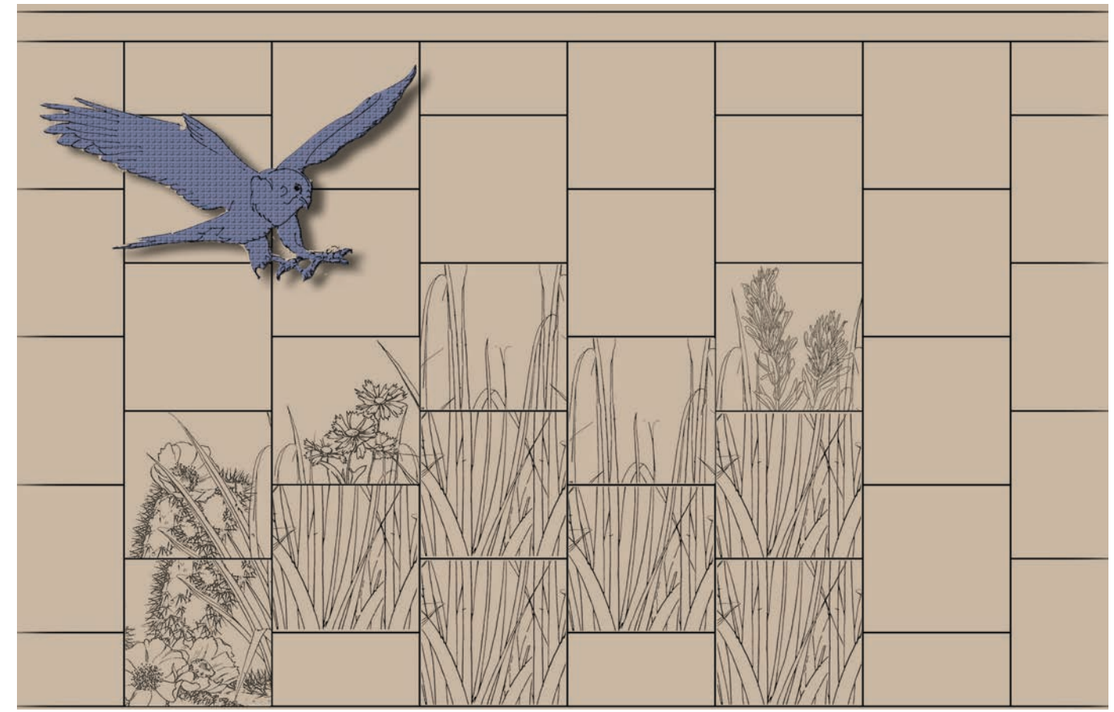

2.0 WALL AESTHETICS

This page intentionally left blank.

2.0 WALL AESTHETICS

INTRODUCTION

This section addresses the treatment of retaining walls, soundwalls, and bridge/structure abutment walls.

All walls shall be integral with their caps and associated traffic barriers and/or retaining walls in the application of a unified base color (Section 6.0) and texture (rustication).

DEFINED HIERARCHY OF TREATMENT LEVELS

Standard
Base color and texture

Accentuated
Repeating pattern of mural inserts, accent colors, or appliqués

Focal
All areas viewed for a sustained time, on a curve, on/off ramps, or a stop light condition where the decorative wall motif shall be more detailed

Landmark
Wall areas enhanced to carry out a strong theme statement, draw the traveler's attention, or make a visual connection to the unique place and/or history

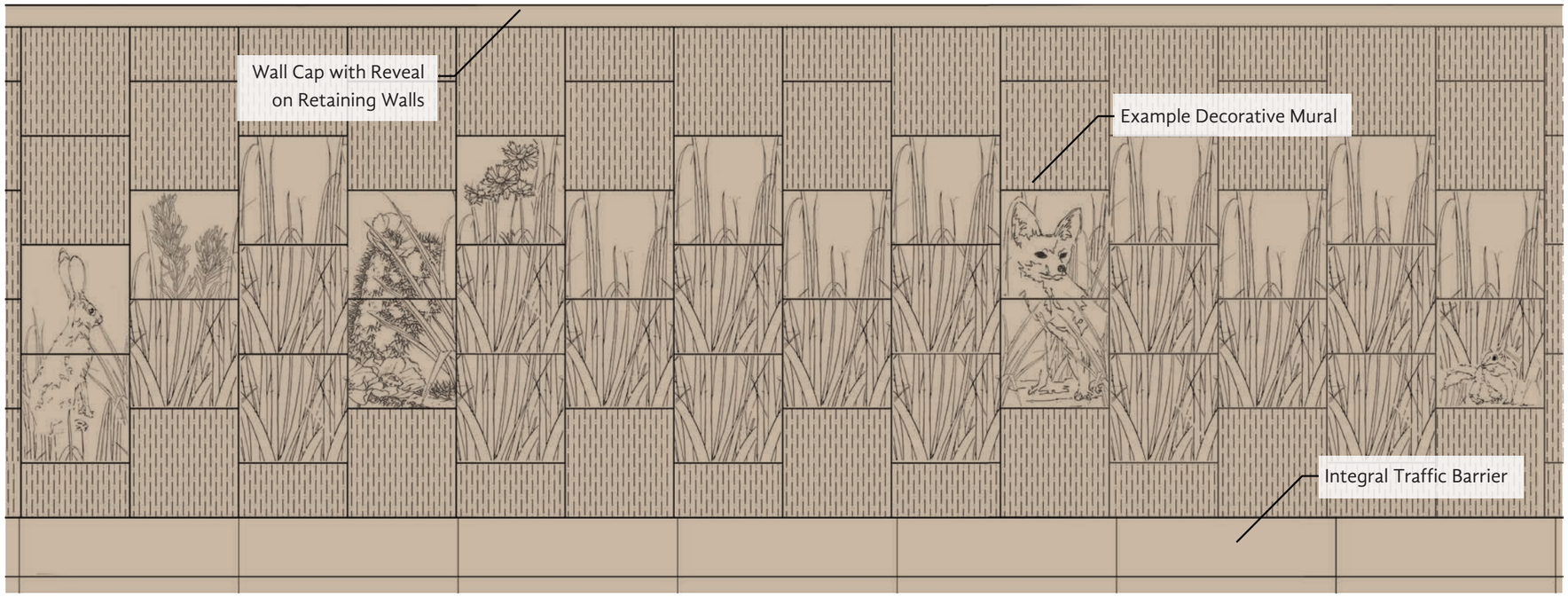

- Surrounding land shall be graded with slopes, terraces, and low walls to minimize wall height and turn ends into slopes.
- Planting shall be provided in front of walls where space permits to soften appearance of wall.
- Walls which require steps in the top level shall have steps with no height greater than 2 feet.
- No post and panel walls or segmental block walls shall be allowed. All terraces shall be planted.
- All retaining walls shall be treated with vertical rustication as a base treatment.
- All retaining walls shall be treated with interspersed aesthetic panels (formliners) depicting the NEON Meadows Redux theme.
- Use one detailed set to three less detailed panels of equal size.
- See the Sculptured Artistic Features section of this attachment for use of structural/artistic features.

- All soundwalls shall be treated with vertical rustication as a base treatment on both sides.
- All soundwalls shall be treated with interspersed aesthetic panels (formliners) depicting the Project NEON Meadows Redux theme.
- A varied pattern of number of panels is preferred.
- One detailed mural panel to three less detailed panels of equal size shall be used.
- A ratio of one third vertical rustication to two thirds mural patterns shall be used.
- Placement of aesthetic patterns and appliqués on walls shall be appropriate in scale to the hierarchy of treatment levels.
- All soundwalls shall receive equal aesthetic treatment on both sides.
- Soundwalls shall have interior columns and single outside seams. Post and panel walls shall not be allowed.
- Each soundwall mural panel shall work independently and in combination with others and special attention paid to avoid horizontal line reveal or texture distortions.

RETAINING WALLS

Retaining wall treatments shall include a multi-panel Meadows Redux theme mural that can be used in multiple combinations depending on the wall type, height, and width.

A Meadows Redux motif of grasses, wildflowers, desert cacti, and native wildlife of appropriate size and scale to the location shall be developed into retaining panels or retaining wall formliners and used in areas of lower speeds or to highlight bridges or intersections.

SOUNDWALLS

Pattern shall be used on both sides of soundwalls. A series of Meadows Redux landscape murals shall be developed at an appropriate size and scale for highway speeds. A minimum of three textures, including vertical rustication, shall be used.

The incorporation of appliqués on the soundwalls is encouraged to break up patterns.

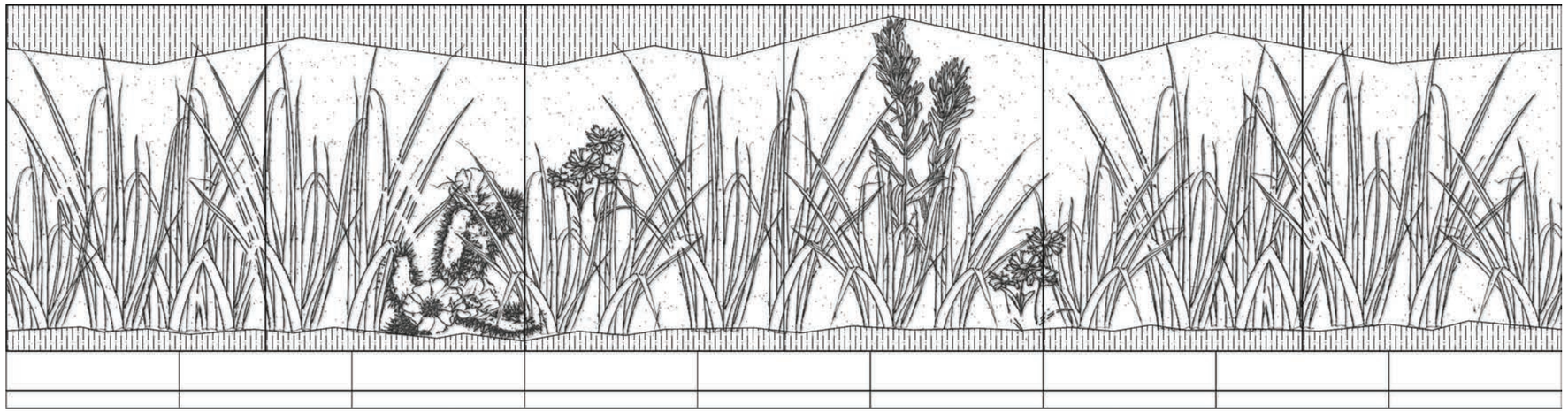

Mural Concept *A six-panel Meadows Redux mural concept with vertical rustication top and bottom. Depth and scale of reveals shall be appropriate for highway speeds.*

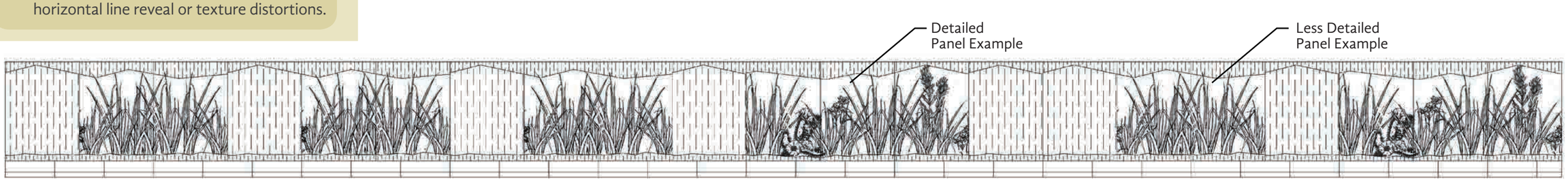

A 250-Foot Sample Wall Segment Series *This 250' sample soundwall series uses two-thirds mural panels to one-third vertical rustication panels. Ground plane and skyline align at each panel minimizing horizontal and texture distortions as the panels change.*

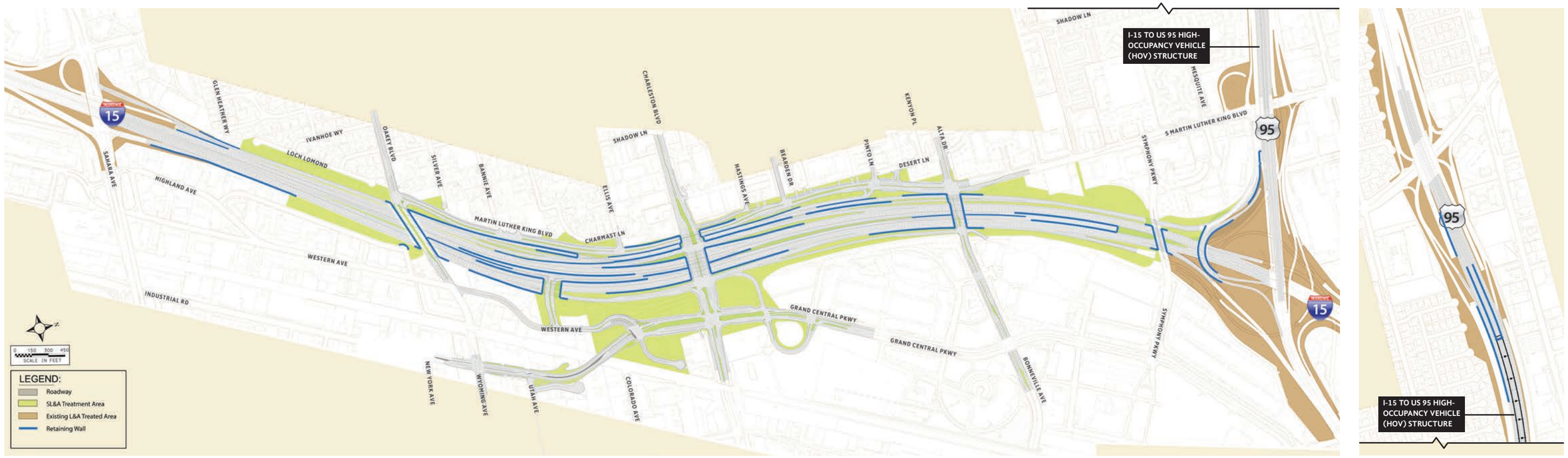

Retaining Wall Map

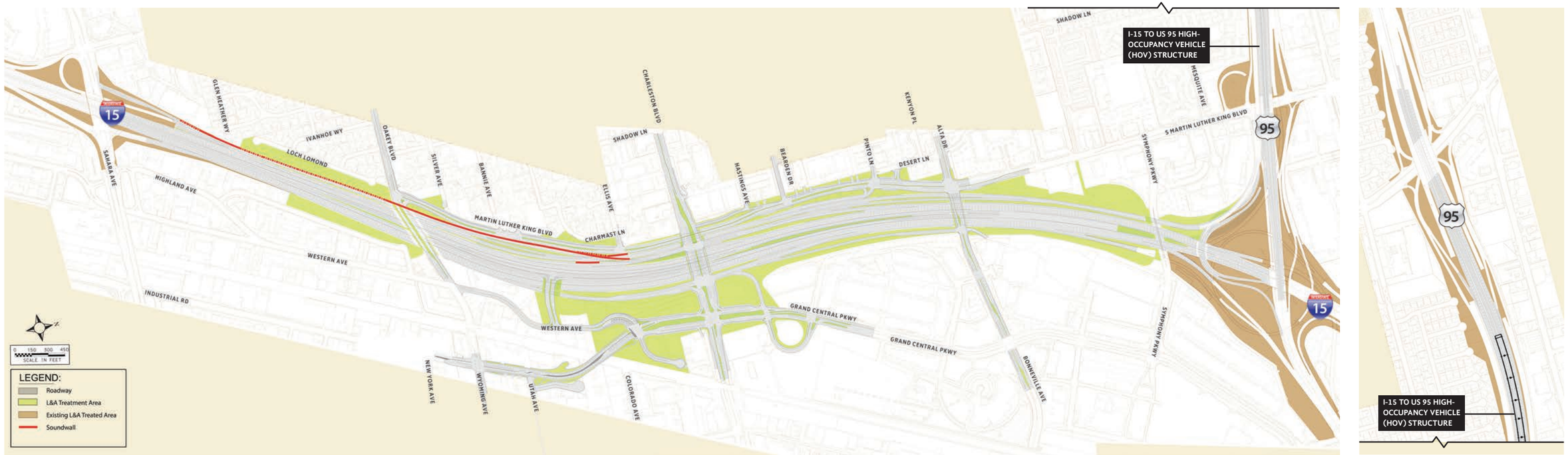

Soundwall Map

3.0 GROUNDPLANE TREATMENTS

This page intentionally left blank.

3.0 GROUNDPLANE TREATMENTS

GROUNDPLANE CONCEPTS

Groundplane treatments along the roadway provide erosion protection, dust and weed control. and an aesthetically diverse visual environment. This treatment includes uniform depth applications of rock mulch, variable sizes and colors of stone, boulders, or glass mulch combined to create textures and patterns that mimic the existing environment and/ or the thematic character of the corridor.

The use of varying rock sizes and textures shall break up the monotony of a continuous plane of mulch for a more natural and aesthetically pleasing visual environment. Varying rock sizes and patterns creates shadow lines and reduces the potential for eye fatigue and related safety issues.

Use of rock mulch colors adds special visual interest, depth of visual scene, and an opportunity to reinforce the corridor theme.

Use of groundplane type, size, color, and patterning design shall be defined by the following hierarchy of treatment levels as viewed from I-15 or the local roadways:
· **Standard**– Minimally viewed areas treated with a varied use of decorative rock, earthforms, and earth art
· **Accentuated**– Areas viewed briefly or with limited exposure to travelers and pedestrians shall include boulders/ walls and landscape elements in addition to the Standard treatment.
· **Focal**– All areas viewed for a sustained time, on a curve, on/off ramps, along local street frontages where the design motif shall be more detailed and engaging for travelers beyond Standard and Accentuated
· **Landmark**– Areas enhanced to create a strong theme statement, draw the travelers and pedestrians attention or make a visual connection to a unique place. Shall include all above treatments plus sculptural/artistic elements.

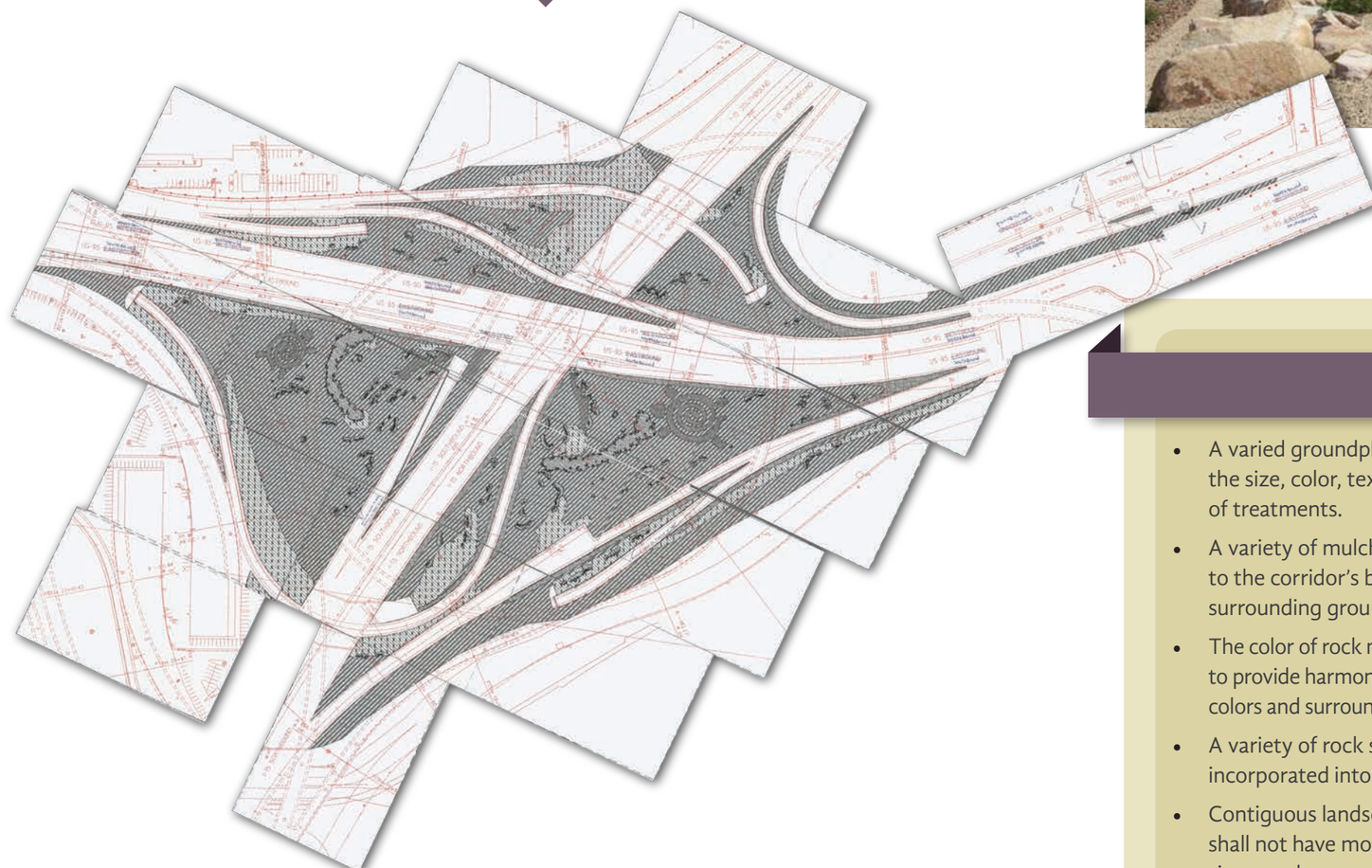

- A varied groundplane shall be created by the size, color, texture, and configuration of treatments.
- A variety of mulch colors that correspond to the corridor's base color and the natural surrounding groundplane shall be used.
- The color of rock mulch shall be coordinated to provide harmony with the corridor theme colors and surrounding environment.
- A variety of rock sizes shall be incorporated into the design.
- Contiguous landscape and aesthetics areas shall not have more than 30% of one rock size or color.
- All exposed ground shall be treated to include as a minimum with earthforms, decorative rock, and earth art.

- Patterns, sizes, and textures of rock mulch shall be used in combination with plant material (see the Vegetation section of this attachment).
- Slope paving shall be used only when other demonstrable, viable alternative treatments are not available.
- Smooth transitions shall be designed with rounding tops and toes of slopes.
- Large spaces of one or more acres shall have aesthetic landforms that vary the topography.
- Use of larger rock size shall meet clear zone safety requirements while providing aesthetic relief.
- Channel alignments shall create naturalized patterns while keeping engineering and hydraulic considerations in focus.
- Pockets of varied size boulders along the edges of the drainage channels shall be used to soften the appearance and visually connect the channel to the landscape context.

GROUNDPLANE CONCEPTS

The design for groundplane aesthetics shall use familiar desert meadow shapes and concepts. Although not always apparent, the concepts help organize materials and guard against random placement. The chosen concept shall focus on achieving the desired outcome whether disguising linear drainages, or screening or creating patterning on uniform fill slopes. Design rock mulch patterns with a curvilinear alignment that flows over and through linear drainage channels, and up slope and shall be used to provide a natural appearance.

Rounding of tops and toes of slopes in channels and painting of concrete-lined channels shall be used to add to the integration of drainage into the landscape.

Large remnant parcels that flank I-15 near Loch Lomond Way and South Highland Avenue are shown below. As illustrated, the area has large Mojave rattlesnake patterning of a second rock mulch type. Landscape boulders, water-wise trees, and desert shrubs are placed infrequently along the edges.

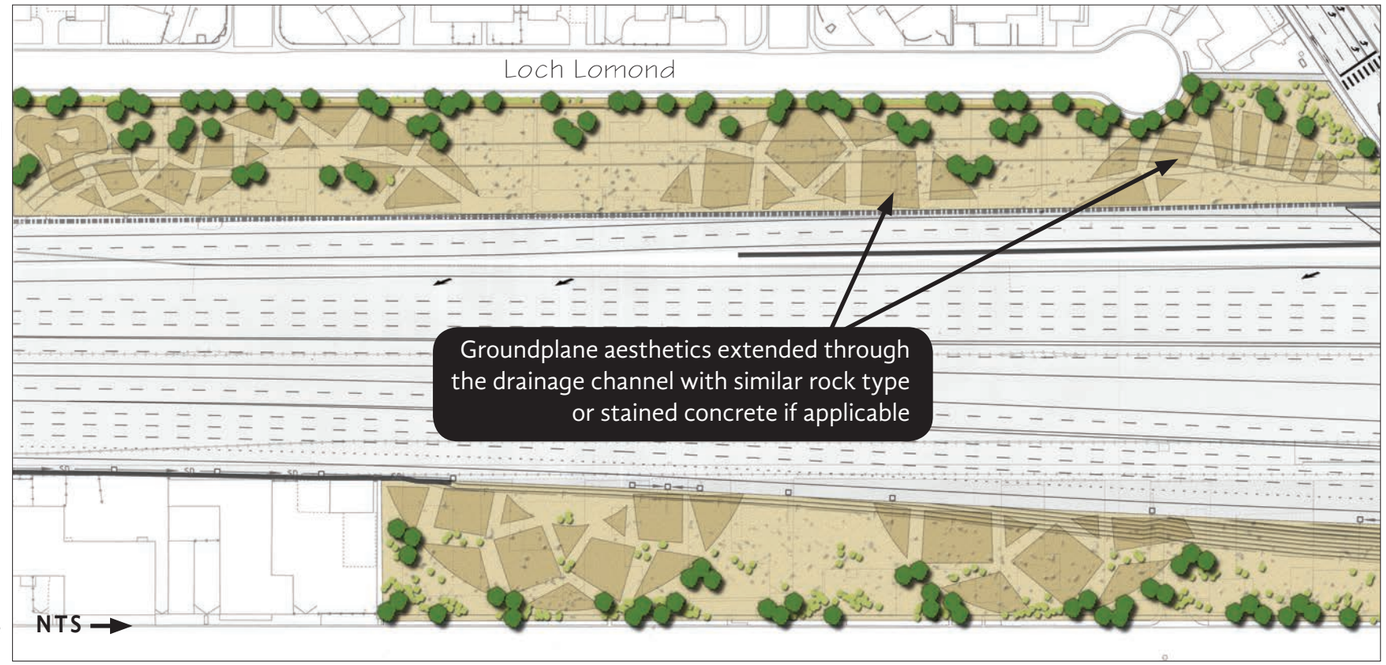

The HOV Gateway from I-15 to Western Avenue is envisioned as a landmark treatment area that includes a formal groundplane treatment. Appropriate height and scale earthen berms, spaced for the travel speed, would be covered with a grid pattern of grasses and contrasting rock mulch. Six Meadows Redux sculptures (see Sculptural/ Artistic Features of this document) in increasing height announce the gateway access. Smaller sculptures grace the median together with trees, grasses, and a formal pattern of rock mulch. Glass mulch shall be designed to catch the light from sculptures and street lights. See cover sheet for rendering.

Remnant parcel treatment at I-15 and Symphony Park Avenue. Curvilinear shapes and earthen berms shall be used and second mulch soften long linear fill slopes and drainage channels. Landscape boulders, water-wise trees, and desert shrubs screen the remnant edges and dot the berms and drainage channels. Rock mulch groundplane patterning shall transition seamlessly up slopes.

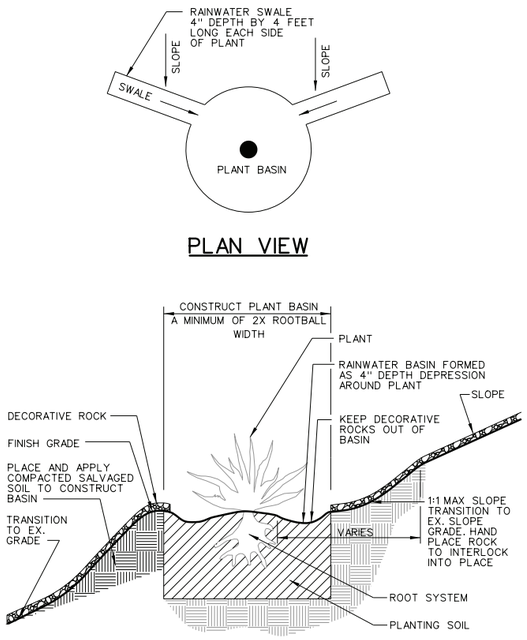

1 TYPICAL RAINWATER HARVESTING DETAIL
NTS

RAINWATER HARVESTING

Rainwater harvesting slows water flow during peak rainfall, and may lessen the burden placed on stormwater drainage systems. The goal of rainwater harvesting is to use natural drainage corridors and thoughtful grading to disperse drainage paths over a broad area, decreasing runoff volume and slowing water flow to create greater contact with soils and promote natural infiltration and plant health. This natural infiltration from paved surfaces also may reduce pollutant transport. Rainwater harvesting increases water collection within the landscape to use in place of or to supplement irrigation.

Small retention facilities shall be used to facilitate rainwater harvesting for landscape and aesthetics. For drainage design purposes, any retention provided shall not be considered for storm retention.

LANDFORMS

Earthen forms, along with various rocks, boulders, decorative mulches, sculpture, and art, complete the decorative groundplane at intersections and other points of interest.

- Water harvesting shall be employed as a passive system of drawing natural rainfall to all plantings.
- Landforms shall be designed for large remnant parcels, 1 acre or greater, to provide a background for perimeter planting and aesthetic interest to the traveling public.

Planting Pit *Prior to plant installation, a planting pit shall be dug 6 inches deeper than the root extension. The planting pit shall be filled with water and allowed to drain. If the planting pit does not drain within 8 hours, then the pit shall have a 6-inch by 24-inch-deep chimney hole dug and filled with pea gravel to improve drainage. For all plants on slopes, dig two shallow depressions (4 inches deep, 12 feet wide by 4 feet or greater long) on uphill side of pits to direct rainwater to plant pit for capturing rainfall from slope. Fill depression with decorative rock (no fines) matching color and size to adjacent decorative rock.*

Rainwater Harvesting *Rainwater harvesting on slopes increases stormwater collection for infiltration and reduces runoff volume.*

Positive Drainage *Using positive drainage from slopes, plants can capture stormwater for required moisture.*

- Freestanding walls, landscape planting, and rock mulch designs shall be integrated with vehicle recovery zone setbacks in non-parallel, pleasing curvilinear or geometric designs.
- Freestanding walls shall not exceed 14 feet in height without a step in the wall plane; individual step heights shall not exceed 2 feet.
- All freestanding wall foundations shall be covered by groundplane treatment so they are not visually exposed.

FREESTANDING METAL ART WALLS

Decorative freestanding art walls can provide vertical elements, add visual interest, and screen traffic from undesirable views.

Metal walls shall be treated with a natural-looking finish such as Desert Varnish, approved accent colors, or other approved finishes.

FREESTANDING GABION ROCK ART WALLS

Curvilinear freestanding gabion art walls add interest to large remnant parcels and highlight changes in groundplane materials.

DRY STACK ROCK WALLS

Curvilinear freestanding rock walls shall be designed as dry stack to add interest to large remnant parcels and highlight changes in groundplane materials.

GRADE CHANGES

Rammed earth walls allow for subtle grade changes and the display of sculpture or desert landscape. Boulder groups transition slopes naturally.

- Uniform slopes with boulder outcroppings, dry stack, or rammed earth wall shall be used. These will be varied to create interesting areas for landscape or sculpture.
- The tops and toes slope rounding of fill slopes and undulate steepness shall be used and alternated with boulder groupings or earth walls to transition grades and increase visual interest while creating vegetation and rainwater harvesting pockets.
- Decorative freestanding art walls shall be used in a unifying pattern in all contiguous open areas of 1 acre and a minimum of 100 linear feet.
- Dry stack, rammed earth, and boulders shall be used to create grade changes in open landscape areas under one acre.

- Depth of all decorative rock mulches shall be no less than 3 inches.
- Landscape boulders shall be placed in clusters visible to motorists and pedestrians to enhance remnant parcels, fill slopes, and interchanges in focal areas.
- Landscape boulders shall be used in the following sizes and numbers at a minimum:

Small	1'x2'	600
Medium	2'x3'	400
Large	3'x4'	300

- In areas of non-concentrated drainage flows decorative rock shall be 1/2" minimum to 6" maximum.

DECORATIVE ROCK

Rock mulch shall be varied and employ multiple colors, sizes, and textures. Patterns and shapes created with rock mulch can lead to a view of special features such as sculptures and accent vegetation. A homogenous palette of rock mulch can produce negative views such as glare and a monotonous driving experience. Overuse of lightly colored mulch can create sunscald on plant material so shall not be used under or around vegetation.

Apache Gold Rock

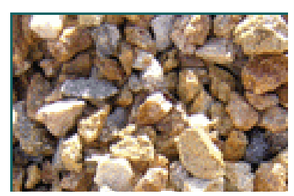

Gold Granite

Mojave Gold Rock

Kino Blue Riprap

GLASS MULCH

Glass mulch can avoid monotonous environments when used primarily as accents among rock mulch or as a groundplane feature or art piece. Large expanses of glass mulch is discouraged.

Recycled glass colors

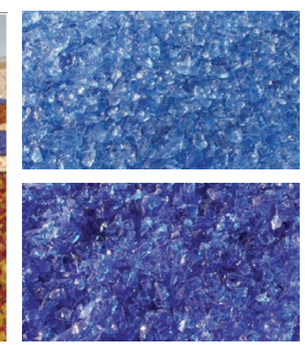

Recycled glass with epoxy coating can emulate water flow or water bodies

BOULDERS

Boulders can break up rock mulch areas by adding visual interest. They can also simulate a stream or linear path by drawing the eye to special site features such as a sculpture or other site accent, thus creating visual movement.

Boulders shall be placed in varying patterns and sizes and shall not have similar visual characteristics within the same grouping. Boulders to be buried 1/3 depth and oriented such that no scaring will show.

Desert Gold Boulders

Corona Brown Boulders

Kino Blue Boulders

4.0 VEGETATION

This page intentionally left blank.

4.0 VEGETATION

Vegetation treatment types for the existing I-15 corridor vary from simple groundcover treatments to masses of varied vegetation. Vegetation for the Meadows Redux concept includes plant material from native Mojave specimens to diverse, regionally adapted plant material selected for color and seasonal interest.

Landscape plant material shall emulate the Meadows Redux theme with the use of grasses or grass-like plants in focal areas. Vegetation areas shall be concentrated in areas most visible to the traveling public on I-15, US 95, and local streets.

Vegetation shall be designed in coordination with groundplane treatments of rock mulches, boulders, berms, and land forms; wherever feasible, rainwater harvesting shall be sculpted into the land.

Enhanced Native

Native Revegetation

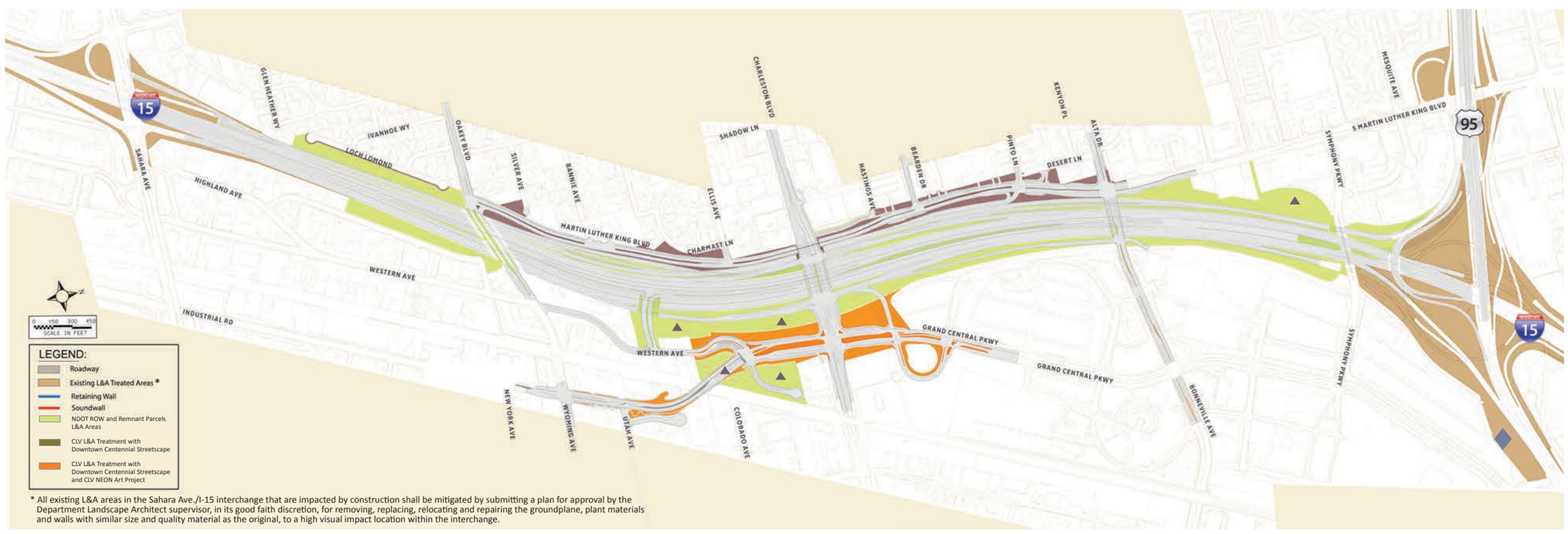

* All existing L&A areas in the Sahara Ave./I-15 interchange that are impacted by construction shall be mitigated by submitting a plan for approval by the Department Landscape Architect supervisor, in its good faith discretion, for removing, replacing, relocating and repairing the groundplane, plant materials and walls with similar size and quality material as the original, to a high visual impact location within the interchange.

- See City of Las Vegas L&A section of this document.
- Native revegetation seed shall be installed in interior areas of large remnant parcels shown with ▲.
- The existing berm will be removed, the area shall be treated to be compatible with the existing US 95 L&A treatments. Treatments shall include, land sculpting to add interest and varied topography without blocking views to adjacent properties; irrigation with a tap and meter within Department ROW shall be accessible to maintenance crews and compatible with District 1 Central Control system; drought tolerant species to match species and density of the existing Spaghetti Bowl theme and vegetation. Shown with ◆.

PLANT PALETTE - TREES

	Height x Width	Exposure to Sun	Water Requirement	Seasonal Interest
NATIVE VEGETATION				
Acacia greggii - Catclaw Acacia	15-25' x 15'	Full	Low	Spring/Fall
Chilopsis linearis - Desert Willow	20' x 15'	Full	Low to Medium	Spring/Fall
Prosopis glandulosa - Honey Mesquite	25' x 35'	Full	Medium	Summer
Yucca brevifolia - Joshua Tree	30' x 15'	Full	Low	Spring
ENHANCED NATIVE				
Acacia shaffneri - Twisted Acacia	18' x 20'	Full	Low	Spring
Acacia smallii - Sweet Acacia	10-35' X 15-25'	Full	Low	Spring
Cercidium microphyllum - Foothills Palo Verde	20' x 20'	Full	Low	Spring
Cordia parviflora - Little Leaf Cordia	4' x 8'	Full	Low	Summer
Parkinsonia aculeata - Mexican Palo Verde	30' x 30'	Full	Low	Spring
Rhus lancea - African Sumac	20' x 30'	Full to Partial	Low to Medium	Spring
REGIONALLY ADAPTED				
Cercidium Hybrid - Desert Museum Palo Verde	25' x 25'	Full	Low	Spring
Cordia boissieri - Texas Olive	10' x 10'	Full to Partial	Low	Summer
Parkinsonia floridum - Blue Palo Verde	20' x 25'	Full	Low	Spring

Note: Several of the plants listed above will require establishment from seed because they are not available in containers.

PLANT PALETTE - SHRUBS

	Height x Width	Exposure to Sun	Water Requirement	Seasonal Interest
NATIVE VEGETATION				
Ambrosia dumosa - White Bursage	2' x 3'	Full	Low	Fall/Spring
Atriplex canescens - Four Wing Saltbush	5' x 8'	Full	Low	Year round
Baccharis spp. – Baccharis ****note: plant male species only*	9' x 9'	Full to Partial	Low	Spring
Coleogyne ramosissima – Blackbrush ****note seed with Erioneuron pulchellum*	5'x6'	Full	Low	Spring
Ephedra nevadensis - Mormon Tea	3' x 3'	Full	Low	Year round
Larrea tridentata - Creosote Bush	10' x 10'	Full	Low	Spring
ENHANCED NATIVE				
Acacia cultriformis - Knifeleaf Acacia	10-15' x 10-15'	Full	Low	Spring
Cassia artemisiodes - Feathery Cassia	6' x 6'	Full	Low	Spring
Cassia nemophila - Desert Cassia	6' x 6'	Full	Low	Spring
Chrysothamnus nausseosus - Rabbit Brush	4' x 4'	Full to Partial	Low	Fall
Ephedra viridis - Mormon Tea	3' x 3'	Full	Low	Year Round
Eremophila spp. - Valentine (TM)	4' x 4'	Full	Low to Medium	Winter
Ericamerica larcifolia - Turpentine Bush	2' x 3'	Full	Low	Fall
Leucophyllum frutescens - Texas Ranger	5' x 5'	Full	Low	Summer
Santolina virens - Green Santolina	2' x 3'	Full	Low	Summer
Simmondsia chinensis - Jojoba	6' x 6'	Full	Low	Spring
REGIONALLY ADAPTED				
Anisacanthus quadrifidus - Mountain Flame	3' x 3'	Full to Partial	Low	Fall/Summer
Buddleia davidii - Navajo Purple Butterfly Bush	8' x 6'	Full to Partial	Low	Spring
Cassia phyllodenia - Silver Leaf Senna	6' X 6'	Full	Low	Spring
Chrysactinia mexicana - Damianita	2' x 2'	Full	Low	Summer
Convolvulus cneurom - Bush Morning Glory	2' x 3'	Full	Low	Spring/Fall
Dalea spp. - Dalea	4' x 5'	Full	Low	Fall
Dodonea viscosa - Hopbush	10' x 6'	Full	Low	Year Round
Leucophyllum spp. - Texas Ranger	4' x 4'	Full	Low	Summer
Rhus ovata - Sugar Bush	10' x 10'	Full to Partial	Low	Spring
Salvia clevelandii - Chaparral Sage	4' x 6'	Full	Low	Spring

- Trees shall be provided at a minimum of 10 per 1 acre of area.
- Grasses, shrubs, cactus, and perennial groundcovers shall be provided at a minimum of 40 per 1 acre of L&A treated areas and remnant parcels.
- Plantings shall be located in groupings for maximum impact.
- The landscape shall be planted to make the best use of the natural form of plants. Groups that require shearing to maintain the design aesthetic shall not be used.
- Plantings shall be designed in accordance with the Meadows Redux theme with native and Mojave desert-adapted low-water-use plants.
- Planting design, placement, and type shall respond to the defined hierarchy of treatment levels.
- At a minimum, plants shall be installed as 24-inch box trees (1.25" to 1.5" caliper, depending on species), 5-6 foot Joshua trees, 5-gallon containers for shrubs and cacti, and 1-gallon containers for groundcovers and perennials.

- Existing plants removed shall be mitigated per the Project NEON Technical Specifications.
- An efficient and effective temporary low-water-use irrigation system shall be used for the 2-year warranty and plant maintenance period.
- This system shall have an integral fertigation system that delivers controlled, organic-based fertilizer, soil amendments and conditioners, wetting agents, organic bio-stimulants, organic critter repellent, and insect control.
- The temporary irrigation system shall meet water purveyor requirements.
- No exposed above-ground systems will be allowed.
- The Design-Builder shall be responsible for all water and electrical service coordination, fees, and charges.
- For CLV irrigation requirements refer to TP Section 5.3.14 and Attachment 05-1 section 7.0 Local Agency Project Infrastructure.

PLANT PALETTE - CACTI, PERENNIALS, AND ACCENTS

	Height x Width	Exposure to Sun	Water Requirement	Seasonal Interest
NATIVE VEGETATION				
Baileya multiradiata - Desert Marigold	1' x 1'	Full to Partial	Low	Spring/Summer/Fall
Echinocereus engelmannii - Hedge Hog Cactus	4' x 1.25'	Full	Low	Year round
Encelia farinosa - Brittlebush	3' x 4'	Full	Low	Spring
Erioneuron pulchellum - Fluffgrass	2" x 6"	Full	Low	Spring/Summer
Ferocactus acanthodes - Barrel Cactus	3-5' x 1.5'	Full	Low	Spring/Summer
Fouquieria splendens - Ocotillo	15' x 5-25'			
Opuntia bigelovia - Teddy Bear Cholla	4' x 2'	Full	Low	Spring
Sphaeralcea ambigua - Desert Globemallow	3' x 3'	Full	Low	Spring
Yucca schidigera - Mojave Yucca	12' x 6'	Full	Low	Spring
ENHANCED NATIVE				
Erigeron divergens - Native Fleabane	1.5' x 1'	Full	Low	Summer
Ferocactus wislizenii - Fish Hook Barrel	5' x 2'	Full	Low	Summer
Opuntia microdasys - Polka Dot Cactus	3' x 3'	Full	Low	Summer
Psilotrophe cooperi - Paper Flower	1' x 1.5'	Full to Partial	Low to Medium	Spring/Summer/Fall
Santolina chamaecyparissus - Lavender Cotton	1.5' x 3'	Full	Low	Spring
Yucca spp. - Yucca	10' x 6'	Full	Low	Summer
REGIONALLY ADAPTED				
Agave weberi - Weber's Century Plant	3' x 2'	Full to Partial	Low	Summer
Artemisia frigida - Wormwood	1' x 1'	Full	Low	Spring
Convolvulus mauritanicus - Ground Morning Glory	1' x 3'	Full to Partial	Low	Spring/Summer
Hemerocallis spp. – Daylily	2' x 2'	Full to Partial	Low	Spring
Muhlenbergia rigens - Deer Grass	3' x 4'	Full	Low	Summer
Nolina erumpens - Beargrass	4' x 6'	Full	Low	Spring
Penstemon spp. - Penstemon	3' x 2'	Full	Low	Spring
Tulbaghia violacea - Society Garlic	3' x 3'	Full	Low	Spring/Summer

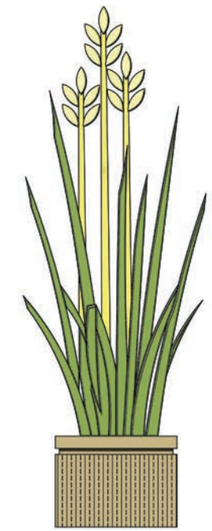

5.0 SCULPTURAL/ ARTISTIC FEATURES

This page intentionally left blank.

5.0 SCULPTURAL/ARTISTIC FEATURES

INTRODUCTION

This section addresses sculptural/artistic features that shall be used throughout the Project NEON to enhance the Meadows Redux theme. These features shall be in the form of standalone features in the landscape or additions to bridges and walls.

Sculptural/artistic features are designed in scale and type and placed according to the defined hierarchy of treatment levels used as a guide throughout this document.

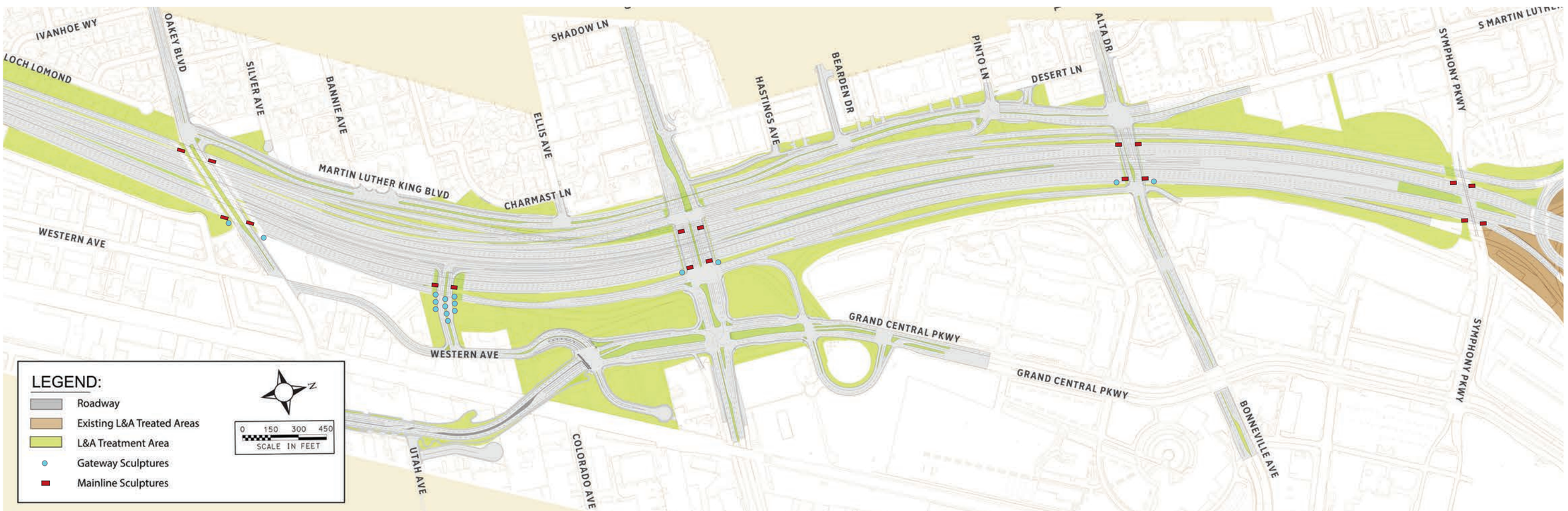

- A series of lighted gateway sculptural elements and lighted mainline sculptural shall be placed at outside bridge overpass/underpass at the following locations;
  Oakey Boulevard – Two large gateway sculptures shall be included, one at each outside bridge abutment, and four mainline sculptures.
  HOV Gateway - Two large gateway sculptures, four medium sculptures and six small sculptures shall be included leading to the entrance to the bridge overpass. In addition a minimum of two medium or four small sculptures shall be placed in the median between the underpass and Grand Central Blvd. Two mainline sculptures placed at outside bridge rails.
  Charleston Boulevard - Four large gateway sculptures shall be included, one at each outside bridge abutment.
  Alta Drive / Bonneville Avenue – Four large gateway sculptures shall be included, one at each outside bridge abutment.
  Symphony Parkway - Four large gateway sculptures shall be included, one at each outside bridge abutment.
- The sculptures shall be of appropriate size and illumination to be visible from both the local streets below and the highway above.
- Sculptures shall be designed to portray the Meadow Redux theme without lighting during the day but shall transition to lighted art installation at night.

SCULPTURE

Sculptural features shall be used to accent walls, bridges, and remnant parcels in focal and landmark areas. They shall be characterized by excellence in craftsmanship, quality, and originality and shall have a minimum design life of 30 years.

Special attention shall be paid to the lighting of all installations so that they transform from the Meadows Redux theme during the day to a lighted gateway theme at night. A series of lighted verticle sculpural elements shall be installed to be seen from I-15 at bridge crossings of local streets and at the HOV gateway. Sculptures placed as focal points in the landscape shall be aesthetically lighted.

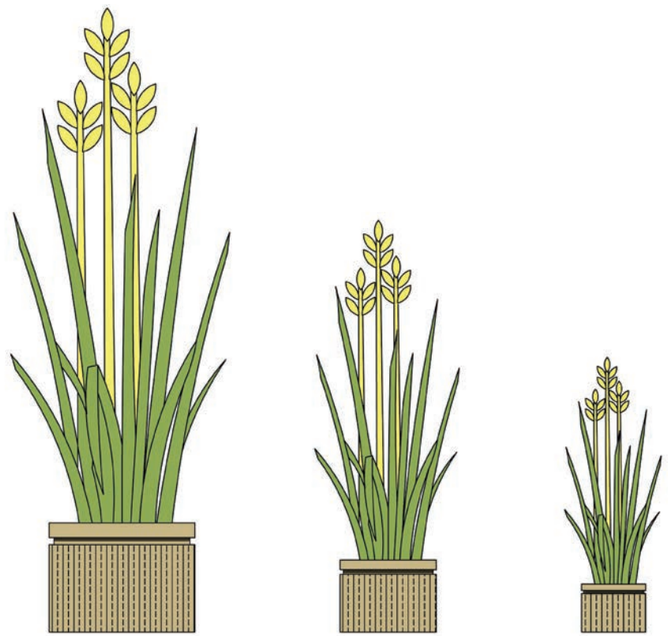

A family of sculptural elements shall vary in size and include Project NEON accent colors and wind- or motion-activated elements.

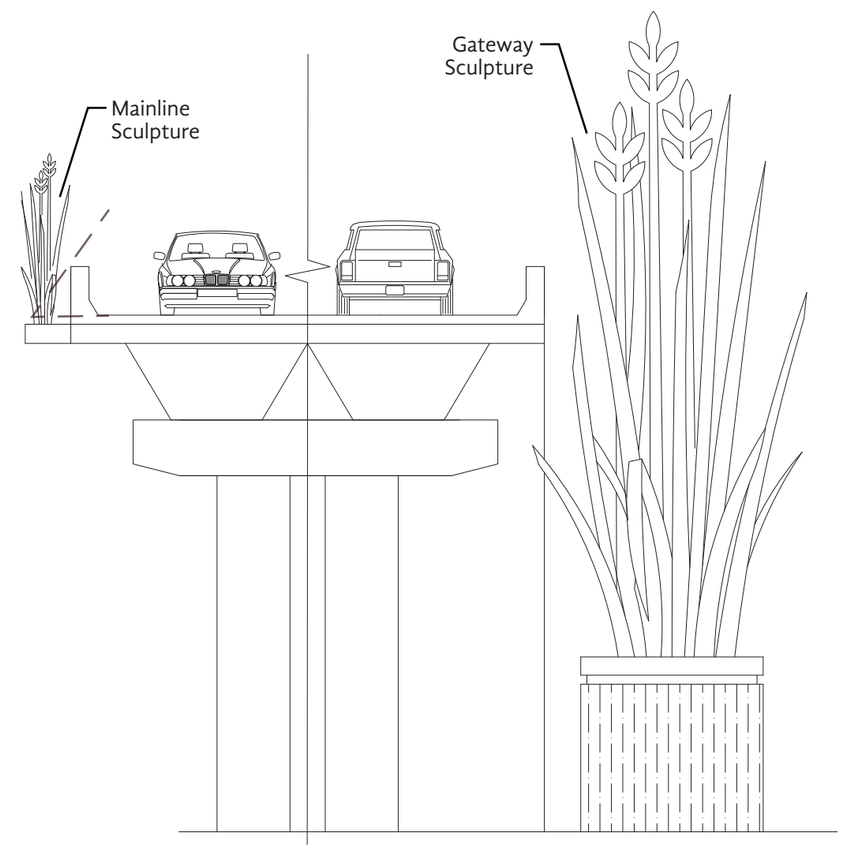

The largest sculptural element shall be visible from the elevated highway and shall provide both daytime color and nighttime lighting effects.

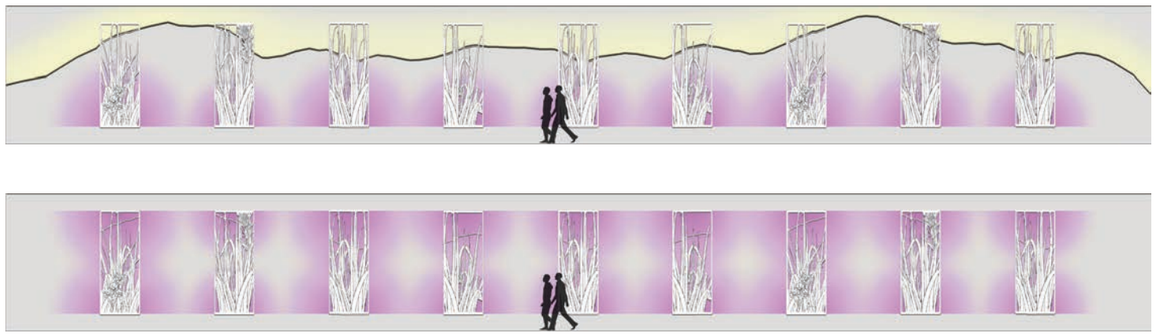

UNDERPASS ART PANELS

The I-15 bridges spanning the HOV entrance/exit, Charleston Boulevard and Symphony Parkway underpass provide opportunities to showcase a day-to-night transition as travelers enter and exit the Downtown Arts District and Las Vegas Government Center area. Attention shall focus on underpass abutment walls where as many as eight bridge structures pass overhead. Meadows Redux underpass art panels shall provide a colorful texture by day then transform into a iconic lighted art installation after dark. Panel installations shall be durable and vandal-resistant and shall enhance the safe movement of both pedestrians and drivers.

- Underpass art panels shall provide at a minimum the light level required for pedestrians and shall have automatic/remote controls for color and timing.
- Underpass art panels shall cover a minimum of 75 percent of the exposed wall height for each installation.
- Underpass art panels shall cover a minimum of 33 percent of the total horizontal distance of each designated overpass structure. Panels shall be no less than 5 panels per 150 linear feet.
- Supplementary lighting may be allowed if it is incorporated and integrated into the Meadows Redux Underpass Art Panel theme.

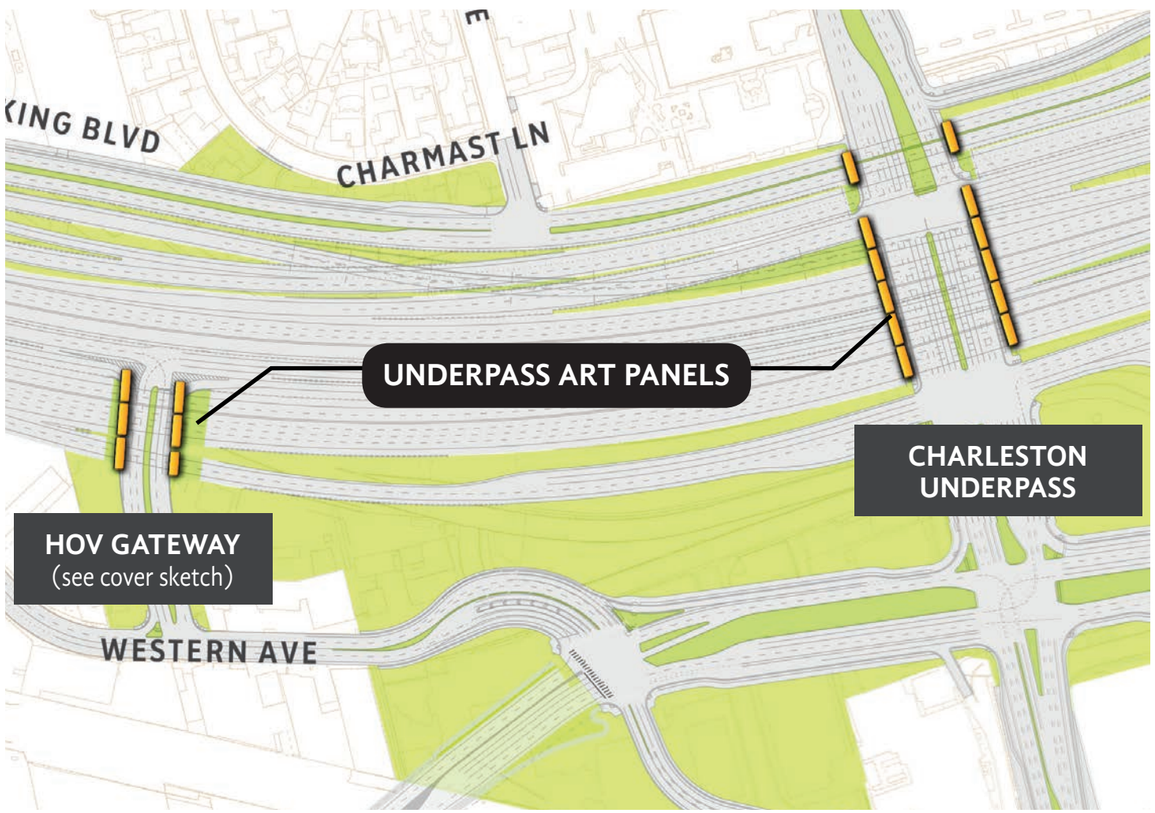

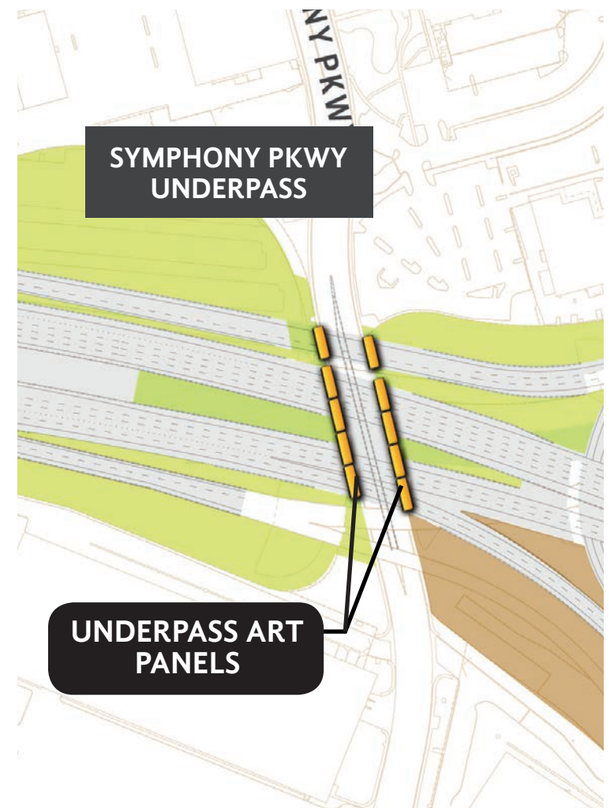

Lighted art panels depicting a Meadows Redux scene shall line bridge abutment walls at the HOV Gateway Charleston Boulevard overpasses and Symphony Parkway Underpass. Lighting may include color changes or motion activation.

- Large-size art appliqué installations (minimum 10 feet by 12 feet) shall be placed along mainline areas as transitions between graphic murals on soundwalls and retaining walls.
- Medium-sized art appliqué installations (minimum 8 feet by 10 feet) shall be grouped with small appliqués to add visual interest to areas of significance or where driver speed is reduced. These areas include large slope-paved areas, on-ramps and off-ramps, or at bridge underpasses.
- Small-sized art appliqué installations (minimum 5 feet by 7 feet), when not used along with larger applications, shall be placed in groups of no fewer than five.
- The following minimums are required on the project:
  - 20 large-size art appliqués
  - 50 medium-size art appliqués
  - 45 small-size art appliqués
- Slope paving is undesirable. In the event slope pave is approved by the Department, additional medium and small-size appliqués are required.

APPLIQUÉS

Appliqué art panels showing desert wildlife shall be placed on walls or bridges to add visual interest. A greater concentration of panels shall be placed where drivers travel at slower speeds. Animal appliqués shall be scaled relative to their size and in scale to each other.

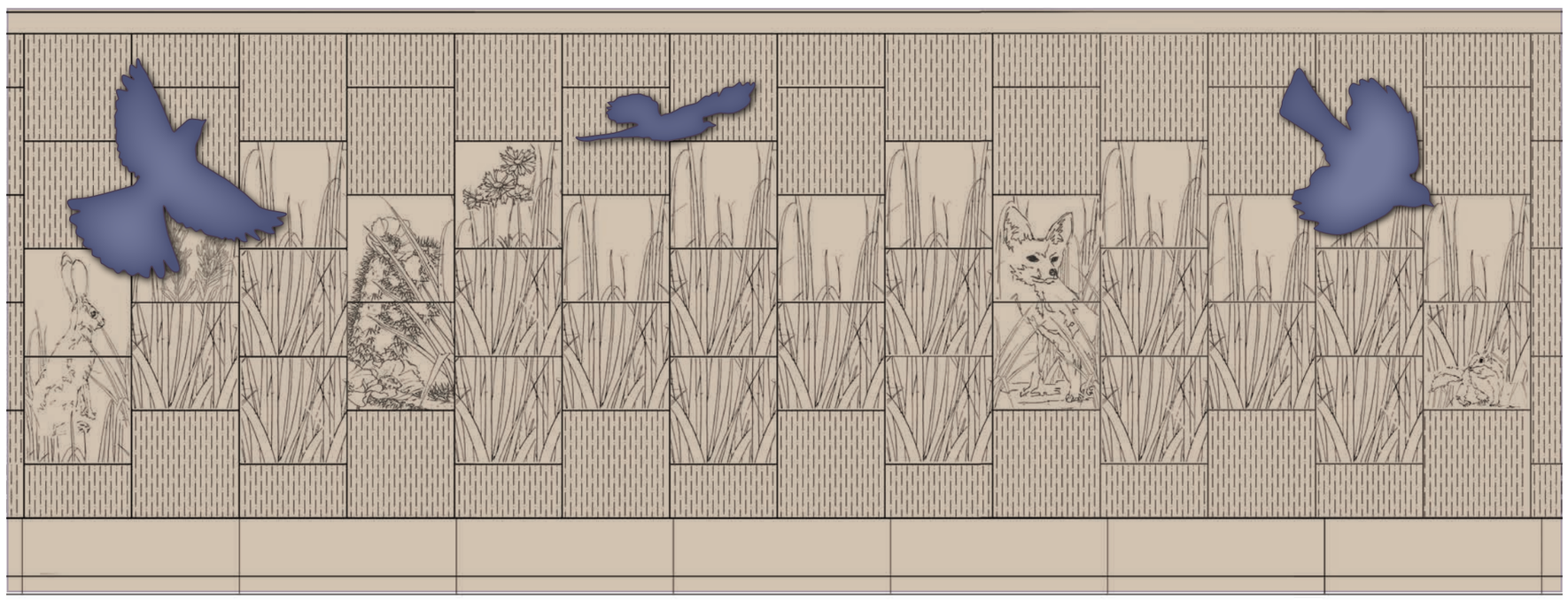

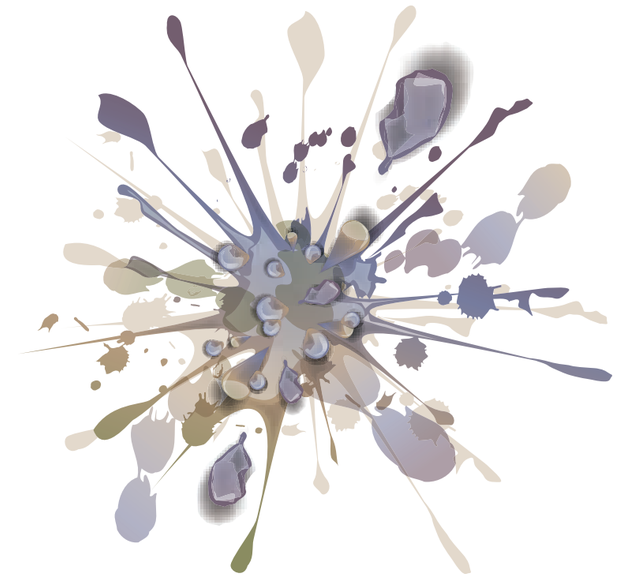

6. COLOR PALETTE

This page intentionally left blank.

6. COLOR PALETTE

COLOR PALETTE APPLICATION

A uniform, consistent color palette shall be used for all highway structures. The standard NDOT practice is to use a uniform and consistent color palette for all new and existing highway structures to complement the surrounding landscape. Base and accent stain or paint colors for all NDOT highways have been selected. To ensure accurate color references, the colors are matched to the Dunn-Edwards system (shown right).

Each highway structure shall use the selected base color and up to two accent colors. Roadway structures within a single landscape design segment shall use the same base color and accent color(s). As existing structures require refinishing, they shall be stained or repainted to be consistent with the selected color palette. Existing art is exempt from this color palette requirement.

Accent colors shall be used to highlight structural aspects and/or details of highway structures, such as the girder of a bridge or a barrier rail. Accent color application shall logically respond to and reinforce structural features or change in materials.

Surface stain Desert Varnish specifically formulated for galvanized metal (hereafter referred to as Desert Varnish) creates a permanent natural earth tone when applied to galvanized steel. Desert Varnish shall be applied to galvanized steel surfaces including fencing, fabric posts and gates, pedestrian light poles, signal-sign bridges and poles, and guardrails.

BASE COLOR

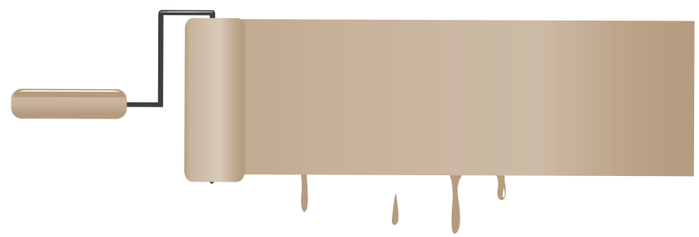

DE 6130
Wooded Acre

NEON SELECTED ACCENT COLORS

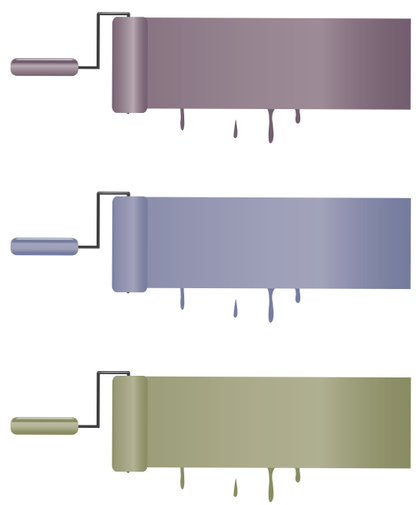

DE 5978
Plum Wine

DE 5914
Bossa Nova Blue

DE 5537
Woodland Walk

- The color palette has been selected for the Project NEON DB 1-4. These colors shall be used on all landscape and aesthetic features, barriers, structural features, and groundplane treatments.
- The base color shall be used on roadway or bridge barriers, columns, retaining walls and soundwalls to present a consistent color from top to bottom with addition of accent colors.
- Fencing, fabric, posts, gates, sign poles, traffic light poles, signal-sign bridges and poles, and pedestrian light poles shall be treated with Desert Varnish.
- Guardrails shall be galvanized and treated with Desert Varnish.
- Color for sculptural/artistic features shall be chosen from the selected accent colors or treated with a complementary thematic finish.
- Desert Varnish formulated for concrete shall be applied to all existing or new concrete open channels, concrete drainage swales or exposed surfaces of open storm drain confluence structures such as headwalls.
- Control of access fencing shall be treated with Desert Varnish.

- Existing Spaghetti Bowl structures shown on plan shall be painted I-15/ US-95 color themes.
- Existing surfaces to be painted with base color include but not limited to, barrier rails (both inside and outside), monuments, bridges, bridge rail, bridge columns, girders, soundwalls, retaining walls, and slope paving.
- All existing barrier rail outside surfaces shall be painted with one accent color (Plum Wine).
- All existing aesthetic painted thematic design elements shall be inspected, cleaned, repaired, restored, repainted per Section 20 (Maintenance Requirements) of the Technical Provisions.
- All existing plant material, art and groundplane treatments shall be protected from paint overspray.

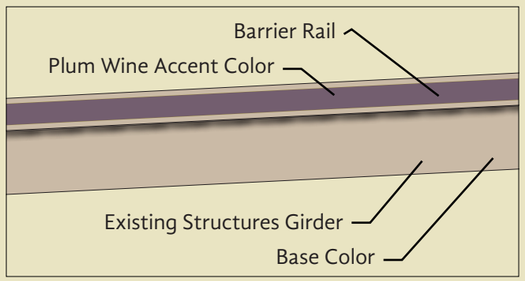

US 95 BASE COLOR

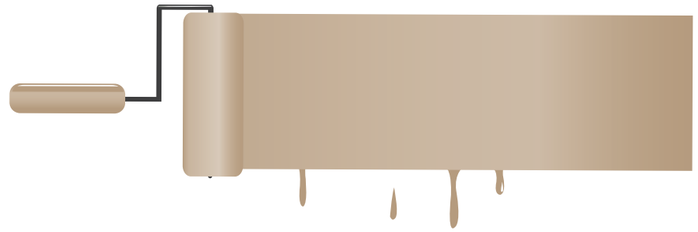

BBB3A2
Flintstone

US 95 SELECTED ACCENT COLORS

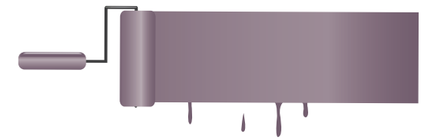

DE 5978
Plum Wine

7.0 LOCAL AGENCY PROJECT INFRASTRUCTURE

This page intentionally left blank.

7.0 LOCAL AGENCY PROJECT INFRASTRUCTURE

L&A Work that will be locally maintained and operated infrastructure and will be designed and constructed to City of Las Vegas Downtown Centennial Standards. Developer shall maintain those treatments through a two year maintenance and establishment period, and until the City of Las Vegas's acceptance of the said improvements, in a manner consistent with City of Las Vegas standards and practices.

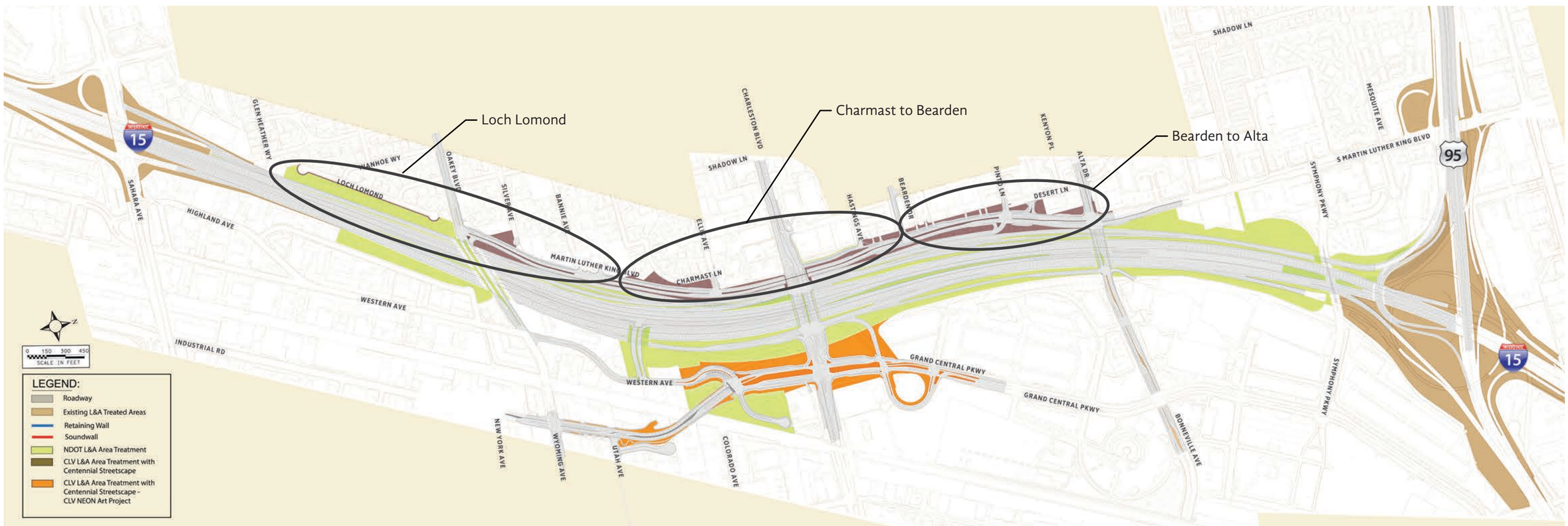

- Sidewalks shall be 10' wide.
- Amenity Zone between sidewalk and roadways shall be 5" wide and contain deciduous street -trees with 30' on center spacing.
- Planted medians shall contain street trees with 30' on center spacing.
- Trees planted in medians and streetscape amenity zones shall be a minimum of 36-inch box (2.25"-2.5" caliper depending on species). Shrubs and cacti shall be a minimum size of 5-gallon containers, and 1-gallon containers for groundcovers and perennials.
- Complimentary species of desert trees shall be planted outside the sidewalk where space allows with 60' on center spacing.
- 5' amenity zones under Project NEON Bridges shall be colored and textured concrete.
- Planting of desert grasses, shrubs, and perennial groundcovers shall be provided in remnant parcels at 40 per 1 acre of area.
- Plants installed in remnant parcels shall be, at a minimum, 24" box trees (1.25" caliper depending on species), 5-6 foot Joshua trees, 5-gallon containers of shrubs and cacti, and 1-gallon containers for containers and perennials.
- Plantings shall be located in groupings for maximum impact.
- The landscape shall be planted to make the best use of the natural form of plants. Groups that require shearing to maintain the design aesthetic shall not be used.

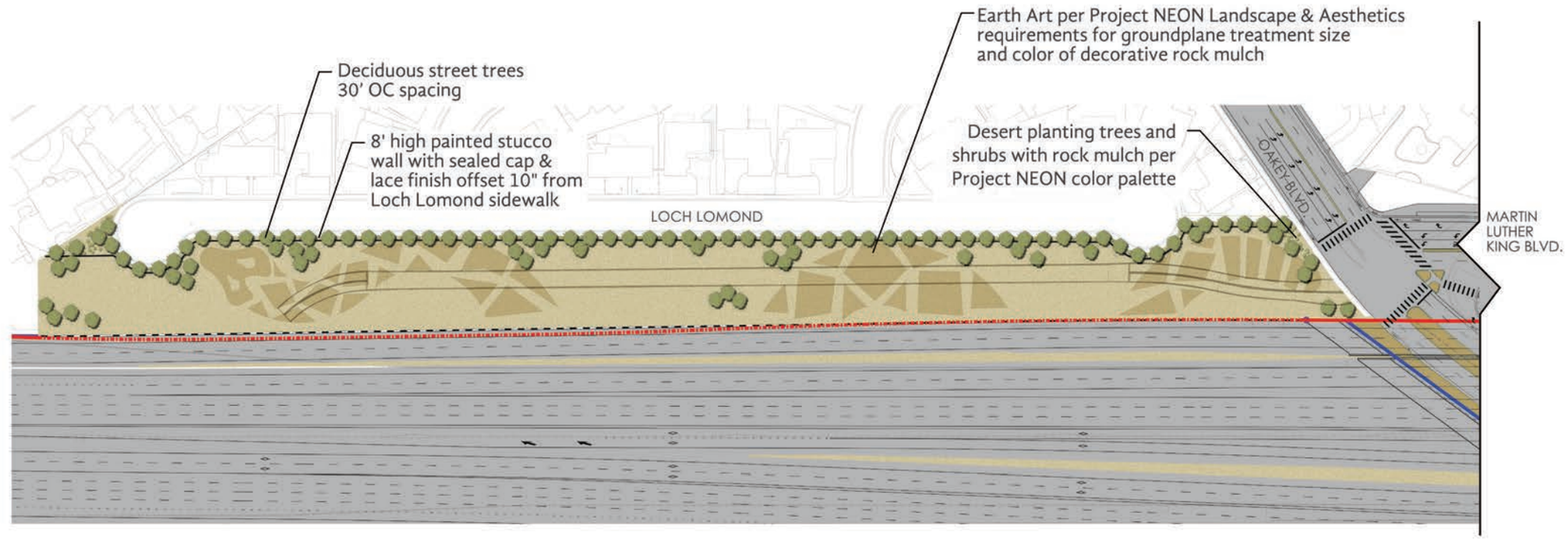

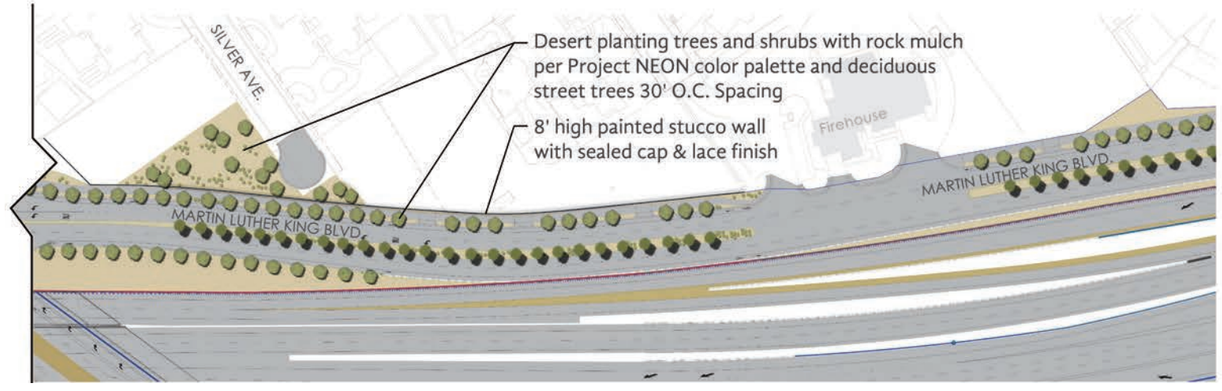

Remnant Parcels - Loch Lomond

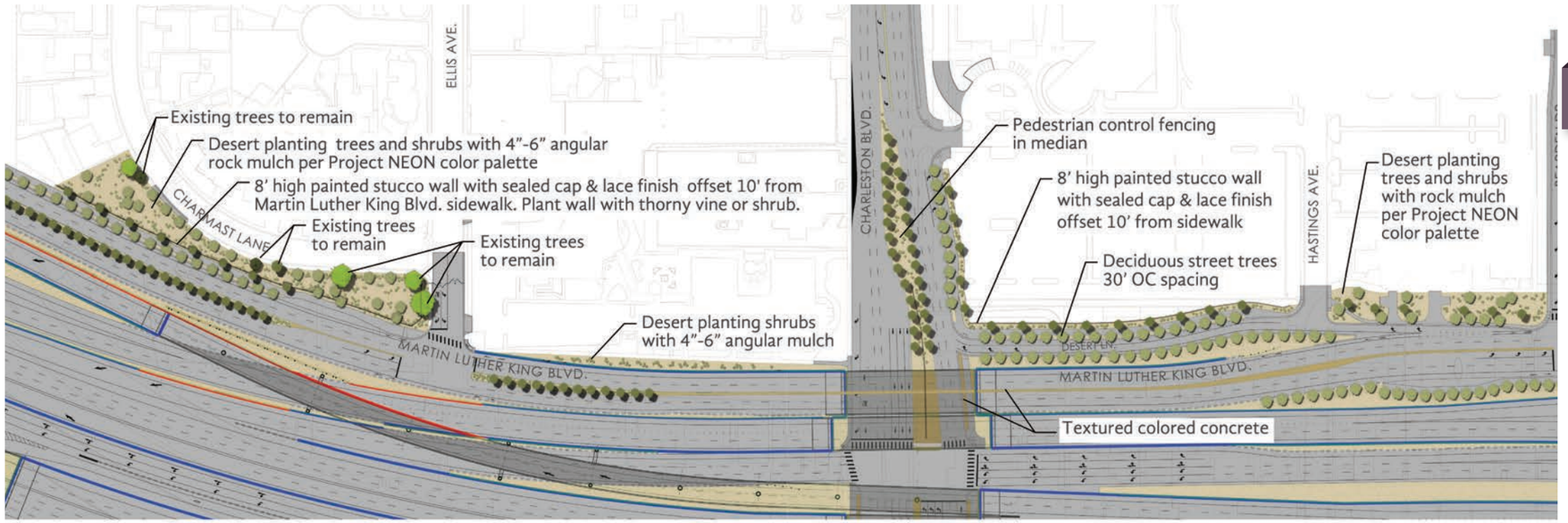

Remnant Parcels - Charmast to Bearden

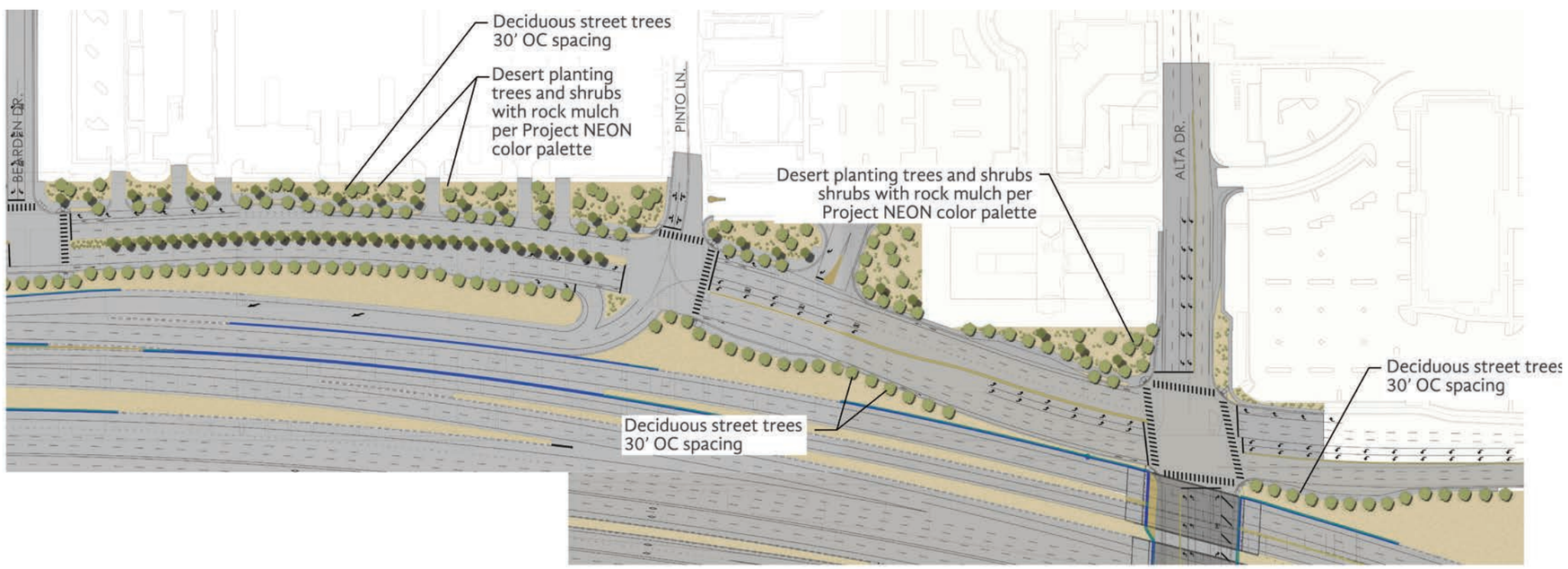

Remnant Parcels - Bearden to Alta

- An efficient and effective low-water use irrigation system shall be used. This system shall have an integral fertigation system that delivers controlled, organic-based fertilizer, soil amendments and conditioners, wetting agents, organic bio-stimulants, organic critter repellent, and insect control.
- The irrigation system shall meet City Of Las Vegas design Requirements.
- Patterns, sizes, and textures of rock mulch shall be used in combination with plant material.
- A varied groundplane shall be created by the size, color, texture, and configuration of treatments.
- A variety of mulch colors that correspond to the corridor's base color and the natural surrounding groundplane shall be used.
- The color of rock mulch shall be coordinated to provide harmony with the corridor theme colors and surrounding environment.
- A variety of rock sizes shall be incorporated into the design.
- Uniformly sized and colored rock mulch in large expanses shall not be accepted.
- All exposed ground shall be treated to include as a minimum earthforms, decorative rock, and earth art.
- In Downtown Centennial Area, poles and appurtenances shall be painted "Black Green" RAL 6012.

ATTACHMENT 07-1
PERMITS AND STATUS

This page intentionally left blank.

Department-Provided Approvals

Location	Approval Name	Administrating Agency	Approval Date
Project	Record of Decision	FHWA	2010
Project	Final EIS	FHWA	2010
Project	Final EIS Reevaluation	FHWA	2012
Project	Final EIS Reevaluation	FHWA	Pending

Major Environmental Approvals

Location	Approval Name	Administrating Agency	Major Environmental Approval Deadline
Project	Section 404 Permit: Discharge of dredged or fill material into Waters of the U.S. (jurisdiction begins at OHWM) (aboveground drainage feature west of I-15 and south of Sahara Drive between South Rancho Drive and I-15)	U.S. Army Corps of Engineers (USACE)	Within 120 days of the resource agencies receipt of Design-Builder's complete design and information package.
Project	Section 401 Water Quality Certification Permit Discharge of dredged or fill material into Waters of the U.S. (drainage feature west of I-15 and south of Sahara Drive between South Rancho Drive and I-15)	Nevada Division of Environmental Protection	Within 150 days of the resource agencies receipt of Design-Builder's complete design and information package.

Note:
On January 23, 2013 the Department sent a preliminary Jurisdictional Determination Report to the U.S. Army Corps of Engineers (USACE) seeking the agency's input on whether there are Waters of the U.S. within the Site. On March 3, 2014 the USACE sent a letter to the Department indicating that the only potential Water of the U.S. in the Project area is a drainage feature on the west side of I-15 between South Rancho Drive and I-15, which extends approximately 2,169 feet between Meade Avenue on the south and a point between Kings Way and West Sahara Avenue on the north. Section 7.5.1.3 (*Waters of the United States*) of the Technical Provisions provides further information.

This page intentionally left blank.

ATTACHMENT 08-1
DRAINAGE DESIGN CRITERIA SUMMARY

This page intentionally left blank.

Design Criteria		Design Summary	Reference
Hydrologic Parameters	HEC-1 (SCS Unit Hydrograph or Kinematic Wave)	Use for offsite flows to storm sewers, inlets, roadside ditches, and culverts typically up to 100 square miles	NDOT *Drainage Manual,* Section 3 *Hydrologic Criteria Drainage Design Manual (HCDDM)* National Oceanic and Atmospheric Administratio n (NOAA) atlases
	Rational Method	Use for onsite flows to storm sewers, inlets, roadside ditches, and culverts, and typically up to 150 acres	
	Natural Resources Conservation Service (NRCS) TR-55 Method	Use for offsite flows to storm sewers, inlets, roadside ditches, and culverts typically up to 150 acres	
	Refer to *HCDDM,* Section 304.3, for Stormwater Runoff Determination Computation Procedures and Section 3.2 of the NDOT *Drainage Manua*l for additional guidance.		
	Time of Concentration	NRCS (TR-55)	
		Maximum sheet flow = 300 feet	
		Minimum Tc = 5 minutes	
	Rainfall Data	Offsite Hydrology - from *HCDDM,* Section 500 -or- Onsite Hydrology - obtain from NOAA atlas 14 Use single gauge	
	Rainfall Distribution (*HCDDM,* Table 503)	SDN3 Distribution – Tributary Area is less than 8 square miles SDN4 Distribution – Tributary Area is greater than or equal to 8 square miles and less than 12 square miles SDN5 Distribution – Tributary Area is greater than or equal to 12 square miles	
	Runoff Coefficients	*HCDDM,* Section 600	
	NRCS Curve Numbers	*HCDDM,* Section 600	
CCRFCD Master Plan Update (MPU) Facilities	Design Storm	100-year	*HCDDM*
	Design Procedures	Acceptable methods per NDOT *Drainage Manual* and *HCDDM*	
	Maximum Allowable Velocity	Refer to *HCDDM*, Table 703	
	Freeboard	*HCDDM,* Section 706.1.3 or Section 706.2.4	
	Channel Lining	100-year design storm All lining shall be in accordance with NDOT *Drainage Manual* and *HCDDM*	
	Flow Superelevation	2 feet maximum per *HCDDM,* Section 706	

Design Criteria		Design Summary	Reference
Roadside Ditches (Open Channels)	Design Storm	Per NDOT *Drainage Manual/ HCDDM* appropriate requirements	NDOT *Drainage Manual* *HCDDM* Section 700
	Design Procedures	Manning's equation	
	Maximum Allowable Velocity	Refer to *HCDDM,* Table 703	
	Freeboard	*HCDDM,* Section 706.1.3 or Section 706.2.4	
	Channel Lining	100-year design storm	
		All lining shall be in accordance with NDOT *Drainage Manual* and *HCDDM*	
	Side Slopes	2:1 maximum for riprap-lined channels	
		3:1 maximum outside of clear zone 6:1 within clear zone or protect.	
		Shall meet clear-zone requirements	
Culverts	Design Storm	Per NDOT *Drainage Manual HCDDM* appropriate requirements	NDOT *Drainage Manual* *HCDDM,* Section 1000
	Culvert Roughness	Minimum value of n = 0.012 for smooth wall and minimum value of n = 0.024 for corrugated wall	
	Minimum Size (Diameter)	24-inch minimum on interstate system (or equivalent diameter) 18-inch minimum (or equivalent diameter)	
	Maximum Velocity (V) and Outlet Protection	V<5 feet/second – Minimum Riprap Protection	
		5 feet/second ≤ V < 15 feet/second – Riprap Protection or Energy Dissipater	
		V≥15 feet/second – Use Energy Dissipator	
	Energy Dissipators	Refer to *HCDDM,* Section 1102 and NDOT *Drainage Manual*	
	Slope	0.3% minimum, except where limited due to the existing tie in location	
Spread Criteria	Freeways (mainline, ramps, bridges):	Design: 25-year (edge of travel lane)	NDOT *Drainage Manual* *HCDDM*
	Ramps, gores, auxiliary lanes, acceleration and deceleration lanes with striped lane widths >12 feet	Design: 25-year – 12 foot dry lane within lane striping	
	Local Roads	Design: 10-year and 100-year requirements per *HCDDM,* Section 303.4	

Design Criteria		Design Summary	Reference
Manholes and Drop Inlets	Drainage Structure Types	Outside of NDOT right-of-way (ROW) – Clark County Standard Drawings and Specifications	NDOT *Drainage Manual* *HCDDM*
	Maximum Manhole Spacing	Pipes 24-inch or less – 300 feet Pipes over 24-inch – 400 feet	
	Minimum difference between invert and outlet pipe invert elevations	0.1 foot, unless flat slopes for connecting pipes, then use the through slope of the storm drain system	
	Inlet Location	Onsite: Refer to NDOT *Drainage Manual,* Section 3.3.2.2 for onsite inlet location or *HCDDM,* as appropriate	
		Offsite: Refer to *HCDDM* and Clark County Standard Drawings and Specifications and NDOT *Drainage Manual* for offsite inlet locations	
	Inlet Spacing	Dependent on Roadway Spread Criteria and key collection points	
	Clogging	25% on grade drop inlets 50% sag locations	
Storm Sewer Networks	Design Storm – Freeways and Ramps	Per NDOT *Drainage Manual/ HCDDM* appropriate requirements	NDOT *Drainage Manual* *HCDDM*
	Design Storm – Non-Freeways	10-year and 100-year requirements	
	Minimum Size	18-inch diameter 12-inch diameter for down drains	
	Minimum Slope	Slope to ensure 3 feet/second or no less than 0.3 percent, except where limited due to the existing tie in location	
	Maximum Level of Surcharging	Hydraulic grade level (HGL) to 1 foot below the final grade above the storm sewer at all locations	
	Design Velocities	3 feet/second minimum (design flow)	
		25 feet/second maximum (design flow)	
	Outlet Velocities (V) and Protection	V<5 feet/second – Minimum Riprap Protection	
		5 feet/second ≤ V < 15 feet/second – Riprap Protection or Energy Dissipater	
		V≥15 feet/second – Use Energy Dissipator	
Bridges	Bridge Deck Drainage	Refer to NDOT *Drainage Manual* Section 3.3.2.2.6 or *HCDDM* as appropriate	NDOT *Drainage Manual* *HCDDM*

This page intentionally left blank.

ATTACHMENT 08-2
DRAINAGE DESIGN COMPONENTS: REQUIREMENTS / LIMITATIONS / PROHIBITIONS

This page intentionally left blank.

Drainage Design Component	Required/ Limited/ Restricted
Steel or Iron Grates.	Required
Bridge Drains – Ultraviolet (UV) protected fiberglass-reinforced pipe (FRP) or steel pipe with 8-inch minimum diameter.	Required
Channel Linings – Articulated Concrete Block, Partially Grouted Riprap (per HEC-23), Loose Riprap, or Concrete.	Required
Reinforced-concrete pipe (RCP) and reinforced-concrete box (RCB) under I-15 mainline ramps, major arterials, or other locations where required by the Department or Local Agencies.	Required
Water tight joints behind walls and on all flexible pipe and where leakage /infiltration is a concern.	Required
Concrete headwalls, metal or precast concrete end sections, or similar outfall treatment.	Required
Drop Inlet with reinforced concrete or corrugated high-density polyethylene (HDPE) pipe riser in shoulder area.	Required
Underdrain System wrapped in the appropriate geotextile fabric and provide a functional 100-year design life.	Required
Scuppers – circular or rectangular with a minimum 9-inch-high by 18-inch-wide opening; approved by National Cooperative Highway Research Program (NCHRP) Report 350; must be configured such that debris will not be able to collect and restrict flow. Limited use upon approval of Deviation in accordance with Section 1.2.10 (*Deviations to the Technical Provisions*).	Limited Use
Linear Drains (Trench or Slotted) must be configured such that debris will not be able to collect and restrict flow and per the requirements in Section 8.3.6 (*Inlets*) of these Technical Provisions. Limited use upon approval of Deviation in accordance with Section 1.2.10 (*Deviations to the Technical Provisions*).	Limited Use
Structures not conforming to NDOT or local standards as appropriate. Limited use upon approval of Deviation in accordance with Section 1.2.10 (*Deviations to the Technical Provisions*).	Limited Use
Minimum Fill Height Requirements on Box Culverts – see Section 14.3.6 (*Drainage Structures*) of these Technical Provisions.	Limited
Detention Basins – except where other flood protection or mitigation is not available.	Prohibited
Retention Basins – except for rainwater harvesting purposes as specified in Section 5 (*Landscape and Aesthetics*) of these Technical Provisions.	Prohibited
Plastic Pipe and corrugated metal pipe (CMP) under freeway mainline, ramps, or major arterials. HDPE pipe may be used for pipe risers, vertical drop shafts, or similar when located in the roadway shoulder and not under the travel lanes.	Prohibited
Polyvinyl chloride (PVC) and single-wall HDPE Storm Drain/Culverts.	Prohibited
Plastic Drop Inlets – unless encased in structural concrete with steel or iron grates.	Prohibited
Bridge Drains – PVC or HDPE.	Prohibited
Closed Conveyances with an open or soft bottom.	Prohibited
Channel Lining – Gabions.	Prohibited
Channel Lining – Fully Grouted Riprap.	Prohibited
Channel Lining relying on geotextiles and vegetative uptake.	Prohibited

This page intentionally left blank.

ATTACHMENT 09-1
FREEWAY DESIGN CRITERIA

This page intentionally left blank.

DESIGN STANDARDS	DESIGN CRITERIA - FREEWAY SYSTEM						
	INTERSTATE	MANAGED LANES – HOV	MANAGE LANES – HOV DIRECT CONNECTOR[1]	MANAGED DROP RAMP – HOV	RAMP	SYSTEM CONNECTOR	COLLECTOR DISTRIBUTOR
Functional Classification	Interstate	Interstate	Ramp	Ramp	Ramp	System Connector	Collector Distributor
Ownership	NDOT	NDOT	NDOT	NDOT	NDOT	NDOT	NDOT
Access	Full	Full	Full	Full	Full	Full	Full
Design Speed (DS) (mph) (Upper/Middle/Lower Ranges, where applicable) for Ramps	70	70	50	60/50/35	60/50/35[2]	60/50/40[2]	65
Posted Speed (mph)	65	65	45	VARIES	VARIES	VARIES	65
Design Vehicle	WB-67	A-BUS	A-BUS	A-BUS	WB-67	WB-67	WB-67
Minimum Stopping Sight Distance (feet)	730	730	425	570/425/250	570/425/250	570/425/305	645
Stopping Sight Distance Adjustments for Grades	AASHTO 2011 Table 3-2	AASHTO 2011 Table 3-2	AASHTO 2011 Table 3-2	AASHTO 2011 Table 3-2	AASHTO 2011 Table 3-2	AASHTO 2011 Table 3-2	AASHTO 2011 Table 3-2
GEOMETRY							
Horizontal							
Minimum Horizontal Radius Curve (feet)	AASHTO 2011 Table 3-10b	AASHTO 2011 Table 3-10b	AASHTO 2011 Table 3-10b	AASHTO 2011 Table 3-10b	AASHTO 2011 Table 3-10b[3,4]	AASHTO 2011 Table 3-10b[3]	AASHTO 2011 Table 3-10b
Minimum Length of Curve (feet)	AASHTO 2011 Section 3.3.13	AASHTO 2011 Section 3.3.13	AASHTO 2011 Section 3.3.13	AASHTO 2011 Section 3.3.13	AASHTO 2011 Section 3.3.13	AASHTO 2011 Section 3.3.13	AASHTO 2011 Section 3.3.13
Maximum Superelevation (%)	8	8	8	8	8	8	8
Design Superelevation Rate	AASHTO 2011 Table 3-10b	AASHTO 2011 Table 3-10b	AASHTO 2011 Table 3-10b	AASHTO 2011 Table 3-10b	AASHTO 2011 Table 3-10b[3,4]	AASHTO 2011 Table 3-10b[3]	AASHTO 2011 Table 3-10b
Minimum Length of Runoff	AASHTO 2011 Table 3-17b AASHTO 2011 Equation 3-23	AASHTO 2011 Table 3-17b AASHTO 2011 Equation 3-23	AASHTO 2011 Table 3-17b AASHTO 2011 Equation 3-23	AASHTO 2011 Table 3-17b AASHTO 2011 Equation 3-23	AASHTO 2011 Table 3-17b AASHTO 2011 Equation 3-23	AASHTO 2011 Table 3-17b AASHTO 2011 Equation 3-23	AASHTO 2011 Table 3-17b AASHTO 2011 Equation 3-23
Minimum Length of Runout	AASHTO 2011 Equation 3-24	AASHTO 2011 Equation 3-24	AASHTO 2011 Equation 3-24	AASHTO 2011 Equation 3-24	AASHTO 2011 Equation 3-24	AASHTO 2011 Equation 3-24	AASHTO 2011 Equation 3-24
% of Runoff on Tangent	AASHTO 2011 Table 3-18	AASHTO 2011 Table 3-18	AASHTO 2011 Table 3-18	AASHTO 2011 Table 3-18	AASHTO 2011 Table 3-18	AASHTO 2011 Table 3-18	AASHTO 2011 Table 3-18
Vertical							
Terrain classification	Level	Level	Level	Level	Level	Level	Level
Maximum Grade (%)	3	3	6	6	6	6	4
Minimum Grade (%)	0.30	0.30	0.30	0.30	0.30	0.30	0.30
Minimum Rate of Vertical Curvature (Ksag – Design)	AASHTO 2011 Table 3-36	AASHTO 2011 Table 3-36	AASHTO 2011 Table 3-36	AASHTO 2011 Table 3-36	AASHTO 2011 Table 3-36	AASHTO 2011 Table 3-36	AASHTO 2011 Table 3-36
Minimum Rate of Vertical Curvature (Kcrest – Design)	AASHTO 2011 Table 3-34	AASHTO 2011 Table 3-34	AASHTO 2011 Table 3-34	AASHTO 2011 Table 3-34	AASHTO 2011 Table 3-34	AASHTO 2011 Table 3-34	AASHTO 2011 Table 3-34
Minimum Length of Vertical Curve (feet)	3 x Design Speed	3 x Design Speed	3 x Design Speed	3 x Design Speed	3 x Design Speed	3 x Design Speed	3 x Design Speed
Minimum Vertical Clearance - New Roadway Structures	16 feet-6 inches	16 feet-6 inches	16 feet-6 inches	16 feet-6 inches	16 feet-6 inches	16 feet-6 inches	16 feet-6 inches

Notes:

[1] Managed Lanes HOV Direct Connector between station “MC” 831+45 to “MC” 899+00 from the RID Reference Design Documents.
[2] “EN”, “MLK-515” and “MLK-NB15” ramp design speed shall be 60/50/30.
[3] “EN”, “MLK-515” and “MLK-NB15” shall use AASHTO 2011 Table 3-9.
[4] “CH-GC” shall use AASHTO Table 3-13b.

AASHTO = American Association of State Highway and Transportation Officials
DS = design speed
mph = miles per hour

DESIGN STANDARDS	DESIGN CRITERIA - FREEWAY SYSTEM						
	INTERSTATE	MANAGED LANES – HOV	MANAGE LANES – HOV DIRECT CONNECTOR[1]	MANAGED DROP RAMP – HOV	RAMP	SYSTEM CONNECTOR	COLLECTOR DISTRIBUTOR
Intersections							
Signalization	--------	--------	--------	Yes	Yes[2]	--------	--------
Design Vehicle (Inside Lane/Outside Lane)	--------	--------	--------	SU/A-BUS	SU/WB-65		
Right Turn Radius	--------	--------	--------	25'	25'	--------	--------
Pedestrian Access	--------	--------	--------	No	No	--------	--------
Bike Facility	--------	--------	--------	No	No	--------	--------
Ramp Metering	--------	--------	--------	--------	Yes[3]	--------	--------
CROSS SECTION							
Travel Lanes							
Minimum Number of Lanes	Varies	Varies	2	1	Varies	Varies	Varies
Minimum Lane Width (feet)	12	12	12	12	12	12	12
Turn Lanes							
Minimum No. of Lanes	--------	--------	--------	2LT/1RT	1RT	--------	--------
Minimum Lane Width (feet)	--------	--------	--------	12	12	--------	--------
Shoulders							
Minimum Shoulder Width – Left/Inside (feet)	10	4	4	4	4	4	4
Minimum Shoulder Width – Right/Outside (feet)	12	3-foot Buffer	8	8	8	8	8
			`				
Cross Slope							
Normal Crown (%)	2	2	2	2	2	2	2
Minimum Roadbed Widening (feet) for Fill Slopes 3:1 or Steeper	5	5	5	5	5	5	5
Graded Roadway Slopes							
Depth of Cut – Back Slope Ratio (feet/ratio) Height of Fill – Slope Ratio (feet/ratio)	NDOT Road Design Guide Section 2.20, Table 2.20	NDOT Road Design Guide Section 2.20, Table 2.20	NDOT Road Design Guide Section 2.20, Table 2.20	NDOT Road Design Guide Section 2.20, Table 2.20	NDOT Road Design Guide Section 2.20, Table 2.20	NDOT Road Design Guide Section 2.20, Table 2.20	NDOT Road Design Guide Section 2.20, Table 2.20
Concrete Barrier Rail							
Lateral Offset (Beyond Normal Edge of Shoulder) (feet)	Standard Drawings R-8.6.1	Standard Drawings R-8.6.1	Standard Drawings R-8.6.1	Standard Drawings R-8.6.1	Standard Drawings R-8.6.1	Standard Drawings R-8.6.1	Standard Drawings R-8.6.1
Widening for Barrier Rail (ft)	Standard Drawings R-8.6.1	Standard Drawings R-8.6.1	Standard Drawings R-8.6.1	Standard Drawings R-8.6.1	Standard Drawings R-8.6.1	Standard Drawings R-8.6.1	Standard Drawings R-8.6.1
Roadside Safety							
Minimum Clear Zone Distance (feet)	AASHTO Roadside Design Guide Table 3.1	AASHTO Roadside Design Guide Table 3.1	AASHTO Roadside Design Guide Table 3.1	AASHTO Roadside Design Guide Table 3.1	AASHTO Roadside Design Guide Table 3.1	AASHTO Roadside Design Guide Table 3.1	AASHTO Roadside Design Guide Table 3.1

Notes:

[1] Managed Lanes HOV Direct Connector between station “MC” 847+00 to “MC” 865+00 from the RID Reference Design Documents.
[2] See Section 15 of the Technical Provisions for Signalized intersection locations.
[3] See Section 9 of the Technical Provisions for Ramp Metering Locations.

AASHTO = American Association of State Highway and Transportation Officials

ATTACHMENT 09-2
ARTERIALS, COLLECTORS, AND LOCAL STREETS DESIGN CRITERIA

ATTACHMENT 09-2

Design Standards	Design Criteria – Arterials, Collectors, and Local Streets																		
	SR 159 Charleston Boulevard	Martin Luther King Blvd (Oakey to Pinto)	Martin Luther King (Pinto to North of Alta)	Grand Central Parkway (Iron Horse Loop to Western)	Grand Central Parkway/Industrial Connector (Western to Wyoming)	Alta Drive	Oakey Boulevard	Western Avenue	Iron Horse Drive	Martin Luther King to Charleston Slip Ramp	Ellis Avenue	Hastings Avenue	Pinto Lane	Charmast Lane	Wall Street	Beardon Drive	Desert Lane	Silver Avenue	Symphony Park Avenue
Functional Classification	Principal Urban Arterial	Minor Urban Arterial	Minor Urban Arterial	Minor Urban Arterial	Minor Urban Arterial	Minor Urban Arterial	Minor Urban Arterial	Minor Urban Arterial	Urban Collector	Urban Collector	Urban Collector	Urban Collector	Urban Collector	Urban Collector	Urban Collector	Urban Collector	Urban Collector	Urban Collector	Minor Urban Arterial
Ownership	NDOT	City of Las Vegas	City of Las Vegas	City of Las Vegas	City of Las Vegas	City of Las Vegas	City of Las Vegas	City of Las Vegas	City of Las Vegas	City of Las Vegas	City of Las Vegas	City of Las Vegas	City of Las Vegas	City of Las Vegas	City of Las Vegas	City of Las Vegas	City of Las Vegas	City of Las Vegas	City of Las Vegas
Design Speed (mph)	45	45	45	35	35	40	40	25	30	35	30	30	30	30	30	30	30	30	40
Posted Speed (mph)	35	35	35	35	35	35	35	25	25	30	25	25	25	25	25	25	25	25	35
Design Vehicle	WB-62	WB-62	WB-62	WB-62	WB-62	WB-62	WB-62	WB-62	WB-62	WB-62	WB-62	WB-62	WB-62	WB-62	WB-62	WB-62	WB-62	WB-62	WB-62
Stopping Sight Distance (feet)	360	360	360	250	250	305	305	360	300	250	300	300	300	300	300	300	300	300	305
Geometry																			
Horizontal																			
Minimum Horizontal Radius Curve (feet)	1039	1039	1039	510	510	762	762	1039	Match Existing	510	333	333	333	333	333	333	333	333	762
Maximum Superelevation – Emax (%)	N/C	N/C	N/C	N/C	N/C	N/C	N/C	N/C	6	N/C	N/C	N/C	N/C	N/C	N/C	N/C	N/C	N/C	N/C
Vertical																			
Maximum Grade (%) – Maximum	7	6	6	6	6	7	7	6	9	9	9	9	9	9	9	9	9	9	7
Minimum Grade (%) – Minimum	0.4	0.4	0.4	0.4	0.4	0.4	0.4	0.4	0.4	0.4	0.4	0.4	0.4	0.4	0.4	0.4	0.4	0.4	0.4
Rate of Vertical Curvature (Ksag – Design)	79	79	79	49	49	64	64	79	37	49	37	37	37	37	37	37	37	37	64
Rate of Vertical Curvature (Kcrest – Design)	61	61	61	29	29	44	44	61	19	29	19	19	19	19	19	19	19	19	44
Minimum Length of Vertical Curve (feet) - Minimum	135	135	135	105	105	120	120	135	90	105	90	90	90	90	90	90	90	90	120
Vertical Clearance – New Roadway Structures	16'-6"	16'-6"	16'-6"	16'-6"	(Note 7)	16'-6"	16'-6"	16'-6"	16'-6"	16'-6"	16'-6"	16'-6"	16'-6"	16'-6"	16'-6"	16'-6"	16'-6"	16'-6"	16'-6"

ATTACHMENT 09-2

Design Standards	Design Criteria – Arterials, Collectors, and Local Streets																		
	SR 159 Charleston Boulevard	Martin Luther King Blvd (Oakey to Pinto)	Martin Luther King (Pinto to North of Alta)	Grand Central Parkway (Iron Horse Loop to Western)	Grand Central Parkway/Industrial Connector (Western to Wyoming)	Alta Drive	Oakey Boulevard	Western Avenue	Iron Horse Drive	Martin Luther King to Charleston Slip Ramp	Ellis Avenue	Hastings Avenue	Pinto Lane	Charmast Lane	Wall Street	Beardon Drive	Desert Lane	Silver Avenue	Symphony Park Avenue
Design Vehicle (Inside Lane/Outside Lane)	SU/WB-50	SU/WB-50	SU/WB-50	SU/WB-50	SU/WB-50	SU/WB-50	SU/WB-50	SU/WB-50	SU/WB-50	___	___	___	___	___	___	___	___	___	SU/WB-50
Pedestrian Access	Yes	Yes	Yes	Yes	Yes	Yes	Yes	Yes	No	Yes	Yes	Yes	Yes	Yes	Yes	Yes	Yes	Yes	Yes
Bike Facility	No	Yes	Yes	No	No	Yes	Yes	Yes	No	No	Yes	Yes	Yes	Yes	Yes	Yes	Yes	Yes	Yes
Cross-Section																			
Number of Through Lanes – Each Direction	3	2	3	2	2	2	2	2	2NB/1SB	1 SB Only	1	1	1	1	1	1	1	1	2
Travel Lane Width (feet) – Minimum	11	11	11	11	11	10	11	10.5	12	11	12	12	12	12	12	12	12	12	10
Turn Lane Width (feet) – Minimum	10	10	10	10	10	10	10	10	10	10	10	10	10	10	10	10	10	10	10
Bike Lane (LT/RT)	No/No	Yes/Yes	Yes/Yes Ellis to Alta Only	Yes/Yes Charleston to Western only	Yes/Yes	Yes/Yes	Yes/Yes	No/No	No/No	No/No	No/No	No/No	No/No	No/No	No/No	No/No	No/No	No/No	No/No
Bike Lane Width (feet) – Minimum	--------	5	5	--------	5	4	4	___	___	____	___	___	___	___	___	___	___	___	___
Shared Use Lane Width (feet) – Minimum	14	___	___	___	___	___	___	16	____	19	14	14	14	14	14	14	14	14	14
Cross Slope																			
Normal Crown (%)	2	2	2	2	2	2	2	2	Match Existing	2	2	2	2	2	2	2	2	2	2
Concrete Barrier Rail																			
Lateral Offset from Vehicular Lane to Face of Barrier(feet) – Minimum	2	2	2	2	2	2	2	2	2	2	2	2	2	2	2	2	2	2	2
Median																			
Width (feet) Minimum	4	4	4	4	4	4	2	4	4	___	___	___	2	___	___	___	4	___	4
Sidewalk																			

ATTACHMENT 09-2

Design Standards	Design Criteria – Arterials, Collectors, and Local Streets																		
	SR 159 Charleston Boulevard	Martin Luther King Blvd (Oakey to Pinto)	Martin Luther King (Pinto to North of Alta)	Grand Central Parkway (Iron Horse Loop to Western)	Grand Central Parkway/Industrial Connector (Western to Wyoming)	Alta Drive	Oakey Boulevard	Western Avenue	Iron Horse Drive	Martin Luther King to Charleston Slip Ramp	Ellis Avenue	Hastings Avenue	Pinto Lane	Charmast Lane	Wall Street	Beardon Drive	Desert Lane	Silver Avenue	Symphony Park Avenue
Sidewalk (LT/RT)	Yes/Yes	Yes/Yes	Yes/Yes	Yes/Yes	Yes/Yes	Yes/Yes	Yes/Yes	Yes/Yes	No/Yes	Yes/No	Yes/Yes	Yes/Yes	Yes/Yes	Yes/Yes	Yes/No	Yes/Yes	Yes/Yes	Yes/Yes	Yes/Yes
Width (feet) – Minimum (Note 5)	5	10	5	5	5	5 (Note3)	5	5	5	10	5	5	5	5	5	5	5	5	5
Amenity strip -5-foot park strip with 10-foot Minimum Sidewalk (LT/RT)	Yes/Yes (Note 2)	Yes/No	Yes/No	Yes/Yes (Charleston to Iron Horse Loop Only)	Yes/Yes	No/No	No/No	No/No	No/No	Yes/No	No/No	No/No	No/No	No/No	No/No	No/No	No/No	No/No	No/No
Cut and Fill Slopes																			
Depth of Cut – Back Slope Ratio (feet/ratio) (horizontal/vertical)	4:1	4:1	4:1	2:1	2:1	4:1	4:1	4:1	4:1	4:1	4:1	4:1	4:1	4:1	4:1	4:1	4:1	4:1	4:1
Height of Fill – Slope Ratio (feet/ratio) (horizontal/vertical)	4:1	4:1	4:1	2:1	2:1	4:1	4:1	4:1	4:1	4:1	4:1	4:1	4:1	4:1	4:1	4:1	4:1	4:1	4:1
Roadside Safety																			
Clear Zone Distance (feet) – Minimum	BOW or CZ	BOW or CZ	BOW or CZ	BOW or CZ	BOW or CZ	BOW or CZ	BOW or CZ	BOW or CZ	BOW or CZ	BOW or CZ	BOW or CZ	BOW or CZ	BOW or CZ	BOW or CZ	BOW or CZ	BOW or CZ	BOW or CZ	BOW or CZ	BOW or CZ
Lateral Clearance with Curb and Gutter (feet) – Minimum	6	6	6	6	6	6	6	6	6	6	6	6	6	6	6	6	6	6	6

Notes:

1. SR 589 Sahara Avenue and SR 599 Rancho Avenue shall meet standards for Principle Urban Arterial and be similar to Design Criteria for Charleston Boulevard.
2. City amenity required on the north side of Charleston Blvd. starting a minimum of 320 feet on the west side of the University of Nevada-Las Vegas (UNLV) Parking lot to the intersection with Grand Central Parkway and on the south side from the intersection with the SB I-15 on-ramp to the intersection with Grand Central Parkway.
3. 10-foot minimum sidewalk required under I-15 Bridge on both sides of Alta Drive.
4. Western Avenue is from the intersection with Oakey Blvd. to the intersection with Grand Central Parkway, Grand Central Parkway is from the intersection with Western Ave. to the north to Iron Horse Loop. Grand Central Parkway/Industrial Connector is from Grand Central Parkway and Western intersection to Industrial and Wyoming intersection.
5. 2-foot minimum lateral offset required to walls, barrier rail, piers, guardrail and building.
6. Transition lengths to match existing roadway widths shall be a minimum of a 25:1 taper rate.
7. Minimum clearance as required in accordance with *BNSF Railway – Union Pacific Railroad, Guidelines for Railroad Grade Separation Projects* and AREMA requirements.

LT = left turn; mph = miles per hour; NB = northbound; RT = right turn; SB = southbound

This page intentionally left blank.

ATTACHMENT 09-2						
DESIGN STANDARDS	FUTURE IMPROVEMENT PHASES DESIGN CRITERIA – ARTERIALS, COLLECTORS, AND LOCAL STREETS					
	ALTA DRIVE	OAKEY BOULEVARD	WESTERN AVENUE	RANCHO DRIVE	WESTWOOD DRIVE	HIGHLAND AVENUE
Functional Classification	Minor Urban Arterial	Minor Urban Arterial	Minor Urban Arterial	Minor Urban Arterial	Urban Collector	Urban Collector
Ownership	City	City	City	City	City	City
Design Speed (mph)	40	35	25	25	20	20
Posted Speed (mph)	35	35	25	25	20	20
Design Vehicle	SU/WB-62	SU/WB-62	SU/WB-62	SU	SU	SU
Stopping Sight Distance (feet)	305	250	155	155	115	115
GEOMETRY						
Horizontal						
Minimum Horizontal Radius Curve (feet)	762	510	198	198	107	107
Maximum Superelevation - Emax (%)	N/C	N/C	N/C	N/C	N/C	N/C
Vertical						
Maximum Grade (%) - Maximum	7	7	6	9	9	9
Minimum Grade (%) - Minimum	0.4	0.4	0.4	0.4	0.4	0.4
Rate of Vertical Curvature (Ksag - Design)	64	49	26	26	17	17
Rate of Vertical Curvature (Kcrest - Design)	44	29	12	12	7	7
Minimum Length of Vertical Curve (feet) - Minimum	120	105	100	100	100	100
Vertical Clearance - New Roadway Structures	16'-6"	16'-6"	16'-6"	16'-6"	16'-6"	16'-6"

ATTACHMENT 09-2						
DESIGN STANDARDS	FUTURE IMPROVEMENT PHASES DESIGN CRITERIA – ARTERIALS, COLLECTORS, AND LOCAL STREETS					
	ALTA DRIVE	OAKEY BOULEVARD	WESTERN AVENUE	RANCHO DRIVE	WESTWOOD DRIVE	HIGHLAND AVENUE
Design Vehicle (Inside Lane/Outside Lane)	SU/WB-50	SU/WB-62	SU/WB-62	SU	SU	SU
Pedestrian Access	YES	YES	YES	YES	YES	YES
Bike Facility	YES	YES	YES	NO	NO	NO
CROSS-SECTION						
No. of Thru Lanes –Each Direction	3	2	2	1	1	1
Travel Lane Width (feet) -Minimum	10	11	11	11	11	11
Turn Lane Width (feet)- Minimum	10	10	10	10	10	10
Bike Lane (LT/RT)	YES/YES	YES/YES	YES/YES	NO/NO	NO/NO	NO/NO
Bike Lane Width (feet)-Minimum	4	4	4	N/A	N/A	N/A
Shared Use Lane Width (feet) - Minimum	___	___	___	___	___	___
Cross-Slope						
Normal Crown (%)	2	2	2	2	2	2
Concrete Barrier Rail						
Lateral Offset from Vehicular Lane to Face of Barrier(feet)-Minimum	2	2	2	2	2	2
Median						
Width (feet) Minimum	2	2	3	N/A	N/A	N/A
Sidewalk						
Sidewalk (LT/RT)	YES/YES	YES/YES	YES/YES	YES/NO	YES/NO	NO/YES

ATTACHMENT 09-2

DESIGN STANDARDS	FUTURE IMPROVEMENT PHASES DESIGN CRITERIA – ARTERIALS, COLLECTORS, AND LOCAL STREETS					
	ALTA DRIVE	OAKEY BOULEVARD	WESTERN AVENUE	RANCHO DRIVE	WESTWOOD DRIVE	HIGHLAND AVENUE
Width (feet) – Minimum (Note 3)	5	5	10 (Note 1)	5	5	5
Amenity strip -5' park strip with 10' Minimum Sidewalk (LT/RT)	NO/NO	NO/NO	YES/YES (Note 2)	NO/NO	NO/NO	NO/NO
Cut and Fill Slopes						
Depth of Cut - Back Slope Ratio (feet/ratio) (horiz./vert.)	4:1	2:1	2:1	2:1	4:1	4:1
Height of Fill - Slope Ratio (feet/ratio) (horiz./vert.)	4:1	2:1	2:1	2:1	4:1	4:1
Roadside Safety						
Clear Zone Distance (feet) - Minimum	BOW or CZ	BOW or CZ	BOW or CZ	BOW or CZ	BOW or CZ	BOW or CZ
Lateral Clearance with Curb and Gutter (feet)- Minimum	6	6	6	2	2	2

NOTES

1. 5-foot minimum sidewalk required between Highland Ave and Oakey Blvd.
2. Along Western Avenue between Oakey Blvd and Grand Central Parkway.
3. 2-foot minimum lateral offset required to walls, barrier rails, piers, guardrails, and buildings.

This page intentionally left blank.

ATTACHMENT 09-3
DESIGN EXCEPTIONS AND DEVIATIONS

This page intentionally left blank.

Attachment 09-3		
Design Exceptions		
Location:	**Description:**	**Lane Width**
I-15 Mainline NB “MN” 745+08 to “MN” 765+83 Length: 2,075 feet	Minimum width for the three left-side general-purpose lanes may be reduced to 11 feet for the initial build. A 12-foot minimum lane width shall be provided for the I-15 Freeway Future Improvements.	
I-15 Mainline NB “MN” 749+81 to “MN” 765+83 Length: 1,602 feet	Minimum width for the two right-side lanes (general-purpose and auxiliary lanes) may be reduced to 11 feet for the initial build. A 12-foot minimum lane width shall be provided for the I-15 Freeway Future Improvements.	
Sahara Avenue NB Entrance “SA2” 746+00 to “SA2” 750+15 Length: 415 feet	Minimum width for lanes may be reduced to 11 feet for the initial build. A 12-foot minimum lane width shall be provided for the I-15 Freeway Future Improvements.	
US 95 WB “L” 1134+30 to “L” 1200+72 Length: 6,642 feet	Minimum width for the three left-side general-purpose lanes may be reduced to 11 feet.	
US 95 EB “L” 1134+00 to “L” 1194+80 Length: 6,080 feet	Minimum width for the three left-side general-purpose lanes may be reduced to 11 feet.	
Location:	**Description:**	**Shoulder Width**
I-15 Mainline SB “MS” 728+68 to “MS” 743+75 Length: 1,507 feet	Minimum width for the right-side shoulder may be reduced to provide a width of 8 to 4 feet. 728+68 to 742+81 – 4-foot shoulder 742+81 to 743+75 – 4-foot to 8-foot shoulder transition	
I-15 Mainline SB “MS” 850+65 to “MS” 853+62 Length: 297 feet	Minimum width for the right-side shoulder may be reduced to provide a width of 8 to 2 feet. 850+65 to 852+89 – 8-foot to 2-foot shoulder transition 852+89 to 853+62 – 2-foot to 4-foot shoulder transition	
I-15 Mainline NB “MN” 731+25 to “MN” 745+30 Length: 1,405 feet	Minimum width for the right-side shoulder may be reduced to provide a width of 8 to 4 feet. 731+25 to 734+00 — 8-foot' to 4-foot' shoulder transition 734+00 to 741+08 — 4-foot' shoulder 741+08 to 741+28 — 4-foot' to 6-foot' shoulder transition 741+28 to 745+30 — 6-foot' shoulder	
I-15 Mainline NB Various Spot Locations	Minimum width for the left-side shoulder may be reduced to provide a width of 4 to 2 feet at locations where overhead sign foundations, bridge columns, and light foundations are located.	
I-15 Mainline SB Various Spot Locations	Minimum width for the left-side shoulder may be reduced to provide a width of 4 to 2 feet at locations where overhead sign foundations, bridge columns, and light foundations are located.	
I-15 NB to WB I-515 Connector “NE” 848+44 to “NE” 849+68 Length: 124 feet	Minimum width for the right-side shoulder may be reduced to provide a width of 6 to 3 feet. 848+44 to 849+08 – 6-foot to 3-foot shoulder transition 849+08 to 849+36 – 3-foot shoulder	

Attachment 09-3	
Design Exceptions	
	849+36 to 849+68 – 3-foot to 6-foot shoulder transition
US 95 EB “L” 1173+84 to “L” 1177+34 Length: 350 feet	Minimum width for the left-side shoulder may be reduced to provide a width of 4 to 2 feet.
US 95 EB “L” 1165+29 to “L” 1178+10 Length: 1,281 feet	Minimum width for the right-side shoulder may be reduced to provide a width of 8 to 4 feet. 1165+29 to 1167+60 – 8-foot to 4-foot shoulder transition 1167+60 to 1169+15 – 4-foot to 6-foot shoulder transition 1169+15 to 1172+00 – 6-foot to 5-foot shoulder transition 1172+00 to 1173+35 – 5-foot shoulder 1173+35 to 1178+10 – 5-foot to 6-foot shoulder transition
US 95 WB “L” 1175+29 to “L” 1178+41 Length: 312 feet	Minimum width for the left-side shoulder may be reduced to provide a width of 4 to 2 feet.
US 95 WB “L” 1157+32 to “L” 1162+55 Length: 523 feet	Minimum width for the right-side shoulder may be reduced to provide a width of 8 to 4 feet. 1157+32 to 1158+05 – 8-foot to 4-foot shoulder transition 1158+05 to 1158+30 – 4-foot to 7-foot shoulder transition 1158+30 to 1160+55 – 7-foot to 6-foot shoulder transition 1160+55 to 1161+21 – 8-foot to 4-foot shoulder transition 1161+21 to 1162+55 – 4-foot shoulder
US 95 WB “L” 1167+00 to “L” 1176+90 Length: 990 feet	Minimum width for the right-side shoulder may be reduced to provide a width of 8 to 4 feet. 1167+00 to 1168+81 – 8-foot to 4-foot shoulder transition 1168+81 to 1176+90 – 4-foot shoulder
US 95 WB “L” 1178+45 to “L” 1187+90 Length: 945 feet	Minimum width for the right-side shoulder may be reduced to provide a width of 8 to 4 feet. 1178+45 to 1186+05 – 4-foot shoulder 1186+05 to 1187+90 – 4-foot to 8-foot shoulder transition
Rancho Drive EB Entrance “RD-2” 73+10 to “RD-2” 75+96 286 feet’	Minimum width for the right-side shoulder may be reduced to provide a width of 6 to 4 feet. 73+10 to 73+49 – 4-foot to 6-foot shoulder 74+54 to 75+96 – 5-foot shoulder
I-515 EB to SB I-15 Connector “MS” 851+99 to “MS” 853+75 Length: 176 feet	Minimum width for the right-side shoulder may be reduced to provide a width of 6 to 2 feet.
MLK-515 Connector Ramp “MLK-515” 50+00 to “MLK-515” 59+80 Length: 980 feet	Minimum width for the right-side shoulder may be reduced to provide a width of 6 to 4 feet.
MLK-515 Connector Ramp	Minimum width for the right-side shoulder may be reduced to provide a width of

Attachment 09-3		
Design Exceptions		
"MLK-515" 62+85 to "MLK-515" 69+05 Length: 620 feet	6 to 2 feet.	
"SA4" 721+73 to "SA4" 723+84 Length: 211 feet	Minimum width for the right-side shoulder may be reduced to provide a width of 6 to 5 feet.	
Location:	**Description:**	**Bridge Width**
I-15 Mainline SB "MS" 850+65 to "MS" 851+99 Length: 134 feet	Bridge width and minimum shoulder width for the right-side shoulder may be reduced to provide a width of 8 to 3 feet. 850+65 to 851+20 – 8-foot to 3-foot shoulder transition 851+20 to 851+99 – 3-foot shoulder	
I-15 NB to WB I-515 Connector "NE" 848+44 to "NE" 849+68 Length: 124 feet	Bridge width and minimum shoulder width for the right-side shoulder may be reduced to provide a width of 6 to 3 feet. 848+44 to 849+08 – 6-foot to 3-foot shoulder transition 849+08 to 849+36 – 3-foot shoulder	
Location:	**Description:**	**Horizontal Alignment**
I-15 Mainline NB "MN" 850+00 to "MN" 857+34 Length: 734 feet	The existing roadway horizontal curvature and superelevation rates may be used through these limits.	
I-15 Mainline NB "MN" 857+34 to "MN" 859+34 Length: 200 feet	The existing roadway horizontal curvature and superelevation rates may be used through these limits.	
I-15 Mainline SB "MS" 849+74 to "MS" 852+30 Length: 256 feet	The existing roadway horizontal curvature and superelevation rates may be used through these limits.	
Grand Central Slip Ramp "CH-GC" 804+93 to "CH-GC" 807+86 Length: 293 feet	Alignment centerline radius may be reduced to 156 feet with a maximum superelevation rate of 8%.	
Location:	**Description:**	**Stopping Sight Distance**
HOV Direct Connector "MC" 846+50 to "MC" 866+00 Length: 1,950 feet	For the barrier sight distance obstruction, a minimum stopping sight distance of 316 feet may be used through this location for the left-side shoulder for the NB to WB direction of travel and for the right-side shoulder for the EB to SB direction of travel. For the NB to WB direction of travel the left and right shoulder widths have been exchanged to provide adequate shoulder widths for the sight distance requirements. The minimum left and right shoulder width criteria are met.	
MLK-515 Connector Ramp "MLK-515" 60+50 to "MLK-515" 63+30 Length: 280 feet	For the barrier sight distance obstruction, a minimum stopping sight distance of 183 feet may be used through this location for the left-side shoulder. Advisory speed warning signs for 25 mph shall be installed for the ramp.	
MLK-515 Connector Ramp "MLK-515" 64+30 to "MLK-515"	For the barrier sight distance obstruction, a minimum stopping sight distance of 183 feet may be used through this location for the left-side shoulder. Advisory	

Attachment 09-3		
Design Exceptions		
69+50 Length: 520 feet	speed warning signs for 25 mph shall be installed for the ramp.	
US 95 Mainline EB “L” 1159+00 to “L” 1175+70 Length: 1,670 feet	For the barrier sight distance obstruction, a minimum stopping sight distance of 536 feet may be used through this location for the left-side shoulder.	
Rancho Drive EB Entrance “RD-2” 71+40 to 73+20 Length: 180 feet	For the barrier and bridge column sight distance obstruction, a minimum stopping sight distance of 377 feet may be used through this location for the right-side shoulder.	
Location:	**Description:**	**Superelevation**
I-15 Mainline NB “MN” 850+00 to “MN” 857+34 Length: 734 feet	The existing roadway horizontal curvature and superelevation rates may be used through these limits.	
I-15 Mainline NB “MN” 857+34 to “MN” 859+34 Length: 200 feet	The existing roadway horizontal curvature and superelevation rates may be used through these limits.	
I-15 Mainline SB “MS” 849+74 to “MS” 852+30 Length: 293 feet	The existing roadway horizontal curvature and superelevation rates may be used through these limits.	
Grand Central Exit “CH-CG” 804+93 to “CH-CG” 807+86 Length: 293 feet	The minimum radii used for design shall be measured from the inner edge of the traveled way. Horizontal curvature and superelevation rates shall provide for a minimum of a 25-mph design speed for a design superelevation rate e_{max} = 6%. Advisory speed warning signs shall be installed for the ramp.	
MLK-515 Connector Ramp “MLK-515” 60+13 to “MLK-515” 60+93 Length: 80 feet	The superelevation transition length for this location may be a minimum of 79 feet.	
Location:	**Description:**	**High-Occupancy Vehicle (HOV) Buffer Width**
I-15 HOV Southbound “MS” 714+00 to “MS”763+00	The buffer width between HOV lanes and I-15 general-purpose lanes may be reduced to 0 foot for the initial build. A 3-foot minimum buffer width shall be provided for the Future Improvements.	
I-15 HOV Northbound “MN” 739+00 to “MN”760+00	The buffer width between HOV lanes and I-15 general-purpose lanes may be reduced to 0 foot for the initial build. A 3-foot minimum buffer width shall be provided for the Future Improvements.	
Notes: Station limits are derived from the Reference Information Documents (RIDs) and are approximate.		

Attachment 09-3	
Deviations	
Location:	**Description: Lane Width**
Alta Drive “AL” 26+15 to “AL” 30+75 Length: 460’	Minimum width for left-outside general purpose lanes may be reduced to10 feet for the initial build. A 12-foot minimum lane width shall be provided for the Future Improvements.
Alta Drive “AL” 28+19 to “AL” 38+03 Length: 984’	Minimum width for left-outside general purpose lanes may be reduced to10 feet for the initial build. A 12-foot minimum lane width shall be provided for the Future Improvements.
Alta Drive “AL” 66+77 to “AL” 72+20 Length: 543’	Minimum width for left-outside general purpose lanes may be reduced to10 feet for the initial build. A 12-foot minimum lane width shall be provided for the Future Improvements.
Charleston Blvd “CH” 34+60 to “CH” 36+00 Length: 140’	Transition lane widths from 11 feet to match existing.
Charleston Blvd “CH-RT” 45+60 to “CH-RT” 46+00 Length: 140’	Transition lane widths from 11 feet to match existing.
Location:	**Description: Urban Trails (10' Sidewalk with 5' Amenity Zone)**
Charleston Blvd “CH” 31+14 to “CH” 35+30 Length: 416’	Minimum width for left-side amenity zone may be reduced to 0 feet. Minimum width for left-side sidewalk may be reduced to 5 feet.
Charleston Blvd “CH” 30+95 to “CH” 34+82 Length: 387’	Minimum width for right-side amenity zone may be reduced to 0 feet. Minimum width for right-side sidewalk may be reduced to 5 feet.
Charleston Blvd “CH” 31+58 to “CH” 36+12 Charleston Blvd “CH-RT” 45+86.79 to end MLK Blvd “MLK” 20+89 to “MLK” 22+99 Length: 210’	Minimum general purpose lanes may be reduced less than 11.0 feet to match into existing general purpose lanes at UPRR crossing. Minimum k-value may be reduced to match into existing at UPRR crossing. Minimum width for left-side amenity zone may be reduced to 0 feet.
MLK Blvd “MLK” 47+87 to “MLK” 50+27 Length: 240’	Minimum width for left-side amenity zone may be reduced to 0 feet.
MLK Blvd “MLK” 62+77 to “MLK” 64+22 Length: 145’	Minimum width for left-side amenity zone may be reduced to 0 feet.

Attachment 09-3	
Deviations	
MLK Blvd “MLK” 49+83 to “MLK” 51+51 Length: 168’	Minimum width for right-side amenity zone may be reduced to 0 feet.
MLK Blvd “MLK” 70+84 to “MLK” 72+08 Length: 124’	Minimum width for right-side amenity zone may be reduced to 0 feet.
Grand Central Parkway “GC” 41+26 to “GC” 42+36 Length: 110’	Minimum width for left-side amenity zone may be reduced to 0 feet for the initial build. A 5-foot minimum amenity zone shall be provided for the Future Improvements. Minimum width for left-side sidewalk may be reduced to 5 feet for the initial build. A 10-foot minimum sidewalk and a 5-foot Amenity Zone shall be provided for the Future Improvements.
Grand Central Parkway “GC” 33+68 to “GC” 34+09 Length: 41’	Minimum width for left-side sidewalk may be reduced to 5 feet for the initial build. A 10-foot minimum sidewalk and a 5-foot Amenity Zone shall be provided for the Future Improvements.
Grand Central Parkway “GC” 41+22 to “GC” 44+52 Length: 330’	Minimum width for right-side amenity zone may be reduced to 0 feet for the initial build. A 5-foot minimum amenity zone shall be provided for the Future Improvements. Minimum width for right-side sidewalk may be reduced to 5 feet for the initial build. A 10-foot minimum sidewalk and a 5-foot Amenity Zone shall be provided for the Future Improvements.
Western Blvd “W” 38+91 to “W” 43+58 Length: 467’	Minimum width for left-side amenity zone may be reduced to 0 feet for the initial build. A 5-foot minimum amenity zone shall be provided for the Future Improvements. Minimum width for left-side sidewalk may be reduced to 5 feet for the initial build. A 10-foot minimum sidewalk and a 5-foot Amenity Zone shall be provided for the Future Improvements.
Western Blvd “W” 39+21 to “W” 43+02 Length: 381’	Minimum width for right-side amenity zone may be reduced to 0 feet for the initial build. A 5-foot minimum amenity zone shall be provided for the Future Improvements. Minimum width for right-side sidewalk may be reduced to 5 feet for the initial build. A 10-foot minimum sidewalk and a 5-foot Amenity Zone shall be provided for the Future Improvements.
Bearden Dr “B” 11+19 to “B” 13+99 Length: 280’	Minimum width for left-side amenity zone may be reduced to 0 feet. Minimum width for left-side sidewalk may be reduced to 5 feet.
Bearden Dr “B” 10+00 to “B” 14+30 Length: 430’	Minimum width for right-side amenity zone may be reduced to 0 feet. Minimum width for right-side sidewalk may be reduced to 5 feet.
Desert Ln “DL” 10+08 to “DL” 10+93 Length: 85’	Minimum width for left-side amenity zone may be reduced to 0 feet. Minimum width for left-side sidewalk may be reduced to 5 feet.

Attachment 09-3	
Deviations	
Desert Ln “DL” 10+45 to “DL” 10+81 Length: 36’	Minimum width for right-side amenity zone may be reduced to 0 feet. Minimum width for right-side sidewalk may be reduced to 5 feet.
Hastings Ave “H” 13+25 to “H” 13+65 Length: 40’	Minimum width for left-side amenity zone may be reduced to 0 feet. Minimum width for left-side sidewalk may be reduced to 5 feet.
Hastings Ave “H” 13+25 to “H” 13+43 Length: 18’	Minimum width for right-side amenity zone may be reduced to 0 feet. Minimum width for right-side sidewalk may be reduced to 5 feet.
Oakey Blvd “OW” 11+64 to “OW” 13+75 Length: 211’	Minimum width for left-side amenity zone may be reduced to 0 feet. Minimum width for left-side sidewalk may be reduced to 5 feet.
Oakey Blvd “OW” 15+94 to “OW” 24+85 Length: 891’	Minimum width for left-side amenity zone may be reduced to 0 feet. Minimum width for left-side sidewalk may be reduced to 5 feet.
Alta Dr “AL” 41+20 to “AL” 42+20 Length: 100’	Minimum width for left-side amenity zone may be reduced to 0 feet. Minimum width for left-side sidewalk may be reduced to 5 feet.
Alta Dr “AL” 45+24 to “AL” 48+60 Length: 336’	Minimum width for left-side amenity zone may be reduced to 0 feet. Minimum width for left-side sidewalk may be reduced to 5 feet.
Alta Dr “AL” 49+50 to “AL” 50+61 Length: 111’	Minimum width for left-side amenity zone may be reduced to 0 feet. Minimum width for left-side sidewalk may be reduced to 5 feet.
Alta Dr “AL” 41+51 to “AL” 42+67 Length: 116’	Minimum width for right-side amenity zone may be reduced to 0 feet. Minimum width for right-side sidewalk may be reduced to 5 feet.
Alta Dr “AL” 45+11 to “AL” 48+29 Length: 318’	Minimum width for right-side amenity zone may be reduced to 0 feet. Minimum width for right-side sidewalk may be reduced to 5 feet.
World Market Driveway “WM” 10+70 to “WM” 12+68 Length: 198’	Minimum width for right-side amenity zone may be reduced to 0 feet. Minimum width for right-side sidewalk may be reduced to 5 feet.

This page intentionally left blank.

ATTACHMENT 09-4
BRIDGE REPLACEMENTS I-937, I-938, G-941, AND I-945

This page intentionally left blank.

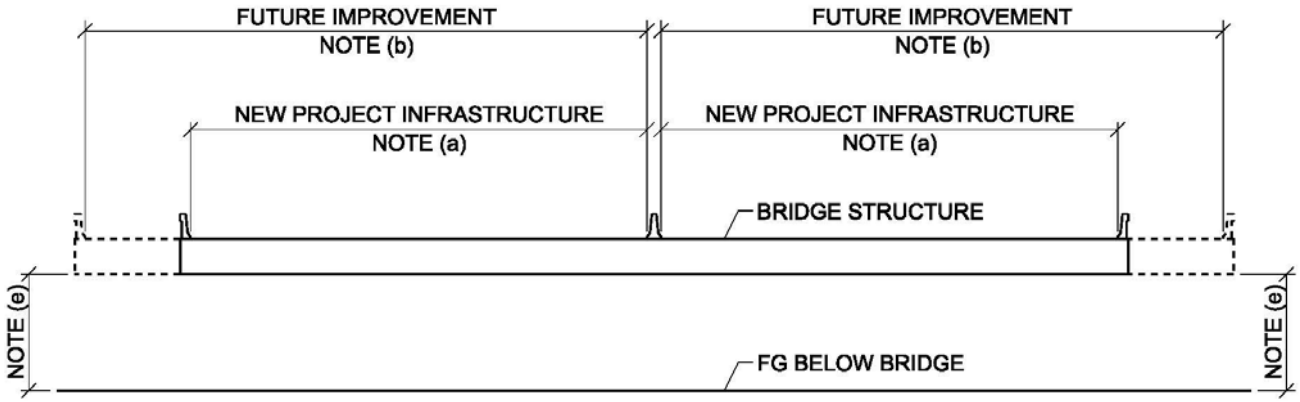

FACILITY CARRIED ON STRUCTURE

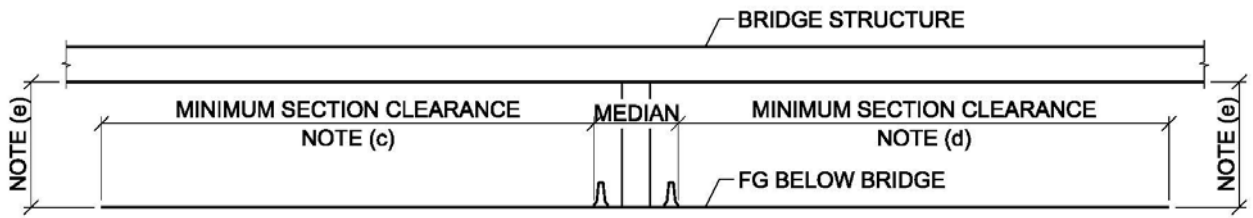

FACILITY UNDER STRUCTURE

Bridge No I-937
Note (a). Design-Builder's bridge replacement shall provide for the New Project Infrastructure for southbound I-15 in accordance with the Project Standards and these Technical Provisions.
Note (a) Design-Builder's bridge replacement shall provide for the New Project Infrastructure for northbound I-15 in accordance with the Project Standards and these Technical Provisions.
Note (b). Southbound I-15, Design-Builder's bridge design and configuration shall be compatible with future improvements providing for four general purpose lanes, and one HOV lane including shoulders, buffers, barrier, medians, and other features in accordance with the Project Standards and as defined in these Technical Provisions. Northbound I-15, Design-Builder's bridge design and configuration shall be compatible with future improvements providing for four general purpose lanes, one auxiliary lane, and one HOV lane including shoulders, buffers, barrier, medians, and other features in accordance with the Project Standards and as defined in these Technical Provisions.
Note (c). Eastbound US95, Design-Builder's bridge replacement shall provide a minimum section clearance width to provide for the Existing Project Infrastructure and for future improvements providing for three general purpose lanes, one auxiliary lane, and one HOV lane including shoulders, buffers, barrier, medians, and other features in accordance with the Project Standards and as defined in these Technical Provisions.
Note (d). Westbound US95, Design-Builder's bridge replacement shall provide a minimum section clearance width to provide for the Existing Project Infrastructure and for future improvements providing for three general purpose lanes, one auxiliary lane, one HOV lane, and one ramp lane including shoulders, buffers, barrier, medians, and other features in accordance with the Project Standards and as defined in these Technical Provisions.
Note (e). Design-Builder's bridge design and configuration shall provide minimum vertical clearance in accordance with the Project Standards compatible with the future improvements.

Bridge No I-938
Note (a). Design-Builder's bridge replacement shall provide for the New Project Infrastructure for southbound I-15 in accordance with the Project Standards and these Technical Provisions.
Note (a). Design-Builder's bridge replacement shall provide for the New Project Infrastructure for northbound I-15 in accordance with the Project Standards and these Technical Provisions.
Note (b). Southbound I-15, Design-Builder's bridge design and configuration shall be compatible with future improvements providing for four general purpose lanes, and one HOV lane including shoulders, buffers, barrier, medians, and other features in accordance with the Project Standards and as defined in these Technical Provisions. Northbound I-15, Design-Builder's bridge design and configuration shall be compatible with future improvements providing for four general purpose lanes, one auxiliary lane, and one HOV lane including shoulders, buffers, barrier, medians, and other features in accordance with the Project Standards and as defined in these Technical Provisions.
Note (c). Design-Builder's bridge replacement shall provide a minimum section clearance width to provide for the Existing Project Infrastructure including one ramp lane, shoulders, buffers, barrier, medians, and other features in accordance with the Project Standards and as defined in these Technical Provisions. Width to provide for horizontal sight distance criteria shall be included in the minimum section width.

Bridge No I-938
Note (e). Design-Builder's bridge design and configuration shall provide minimum vertical clearance in accordance with the Project Standards compatible with the future improvements.

Bridge No. G-941
Note (a). Design-Builder's bridge replacement shall provide for the New Project Infrastructure for southbound I-15 in accordance with the Project Standards and these Technical Provisions.
Note (a) Design-Builder's bridge replacement shall provide for the New Project Infrastructure for northbound I-15 in accordance with the Project Standards and these Technical Provisions.
Note (b). Southbound I-15, Design-Builder's bridge design and configuration shall be compatible with future improvements providing for four general purpose lanes, and one HOV lane including shoulders, buffers, barrier, medians, and other features in accordance with the Project Standards and as defined in these Technical Provisions. Northbound I-15, Design-Builder's bridge design and configuration shall be compatible with future improvements providing for four general purpose lanes, one auxiliary lane, and one HOV lane including shoulders, buffers, barrier, medians, and other features in accordance with the Project Standards and as defined in these Technical Provisions.
Note (c). Design-Builder's bridge replacement shall provide a minimum section clearance width to provide the existing clear span of railroad facilities and ROW equal or greater than the existing section clearance width.
Note (e) Design-Builder's bridge design and configuration shall provide minimum vertical clearance in accordance with the Project Standards compatible with the future improvements.

Bridge No I-945
Note (a). Design-Builder's bridge replacement shall provide for the New Project Infrastructure for eastbound US 95 in accordance with the Project Standards and these Technical Provisions.
Note (a) Design-Builder's bridge replacement shall provide for the New Project Infrastructure for westbound US 95 in accordance with the Project Standards and these Technical Provisions.
Note (b). Design-Builder's bridge design and configuration shall be compatible with future improvements providing for three general purpose lanes, one auxiliary lane, and one HOV lane including shoulders, buffers, barrier, medians, and other features in accordance with the Project Standards and as defined in these Technical Provisions.
Note (c) Design-Builder's bridge replacement shall provide a minimum section clearance width to provide for three general purpose lanes, two left turn lanes, bike lane, curb, sidewalks, medians, and other features in accordance with the Project Standards and as defined in these Technical Provisions.
Note (d). Design-Builder's bridge replacement shall provide a minimum section clearance width to provide for three general purpose lanes, two left turn lanes, bike lane, curb, sidewalks, medians, and other features in accordance with the Project Standards and as defined in these Technical Provisions.
Note (e). Design-Builder's bridge design and configuration shall provide minimum vertical clearance in accordance with the Project Standards compatible with the future improvements.

This page intentionally left blank.

ATTACHMENT 10-1
ASPHALTIC CONCRETE FRICTION COURSE

This page intentionally left blank.

ASPHALTIC CONCRETE FRICTION COURSE

01 Description

01.01 General. This work consists of furnishing all materials, mixing at a plant, hauling, and placing a mixture of aggregate materials, mineral filler, and bituminous material (asphalt-rubber) to form a pavement course, in accordance with the details shown on the plans and the requirements of these specifications, and as directed.

Design-Builder shall be responsible for all adjustments to equipment necessary to properly accommodate the use of asphalt-rubber as a bituminous material.

The Design-Builder shall perform mix designs in accordance with Arizona Test Method 814, modified as necessary for Asphaltic Concrete Friction Course (Asphalt-Rubber).

01.02 Qualifications. Qualified Design-Builders must have performed satisfactory mixing and placement of asphalt rubber-asphaltic concrete friction course/dense grade for a minimum of 3 years on at least three projects and a minimum of 200,000 square yards.

Design-Builder's onsite paving foreman shall have a minimum of 3 years' experience, including demonstrated experience supervising the mixing and placement of a minimum of 200,000 square yards of asphaltic concrete friction course, and shall be present on the job site during all mixing and placement activities. Each member of the paving crew shall have experience performing similar paving work for a minimum of 10 lane miles of asphaltic concrete friction course placement. The person in charge of the blending operation for the crumb rubber and the asphaltic binder shall have worked on a minimum of 3 similar jobs previously.

01.03 Pre-paving Coordination. Before developing a mix design, Design-Builder shall perform the following tasks with concurrence from the Lead Engineer:

(a) Design-Builder's qualifications and reference list, which includes project name, location of work, client name, current contact phone numbers, and a brief description of work performed, including equipment used and total area of placed asphalt rubber-asphaltic concrete friction course/dense grade in square yards.

(b) A list identifying the onsite project manager and all paving crew personnel who will be assigned to the project, including a summary of each individual's experience that is complete enough for the Lead Engineer to assess whether each individual has satisfied the required qualifications.

(c) A detailed work plan for the blending and placement operation, which includes the following items:

1. The proposed construction sequence and schedule
2. The types of equipment and tools to be used
3. The number of personnel to be employed on the project
4. The sequence of the proposed asphaltic concrete blending operation

02 Materials

02.02 Bituminous Material. Design-Builder shall provide asphalt rubber conforming to the requirements of the asphalt rubber specifications. When producing the asphalt rubber, asphalt cement type PG64-16 and crumb rubber gradation Type B, conforming to the requirements of the asphalt rubber specifications, shall be used.

Design-Builder shall not dilute the asphalt-rubber with extender oil, kerosene, or other solvents. Contaminated asphalt-rubber will be rejected.

Design-Builder shall purge any kerosene or other solvents used in to clean equipment from the system before any subsequent use of that equipment.

02.03 Mix Design. Design-Builder shall develop a mix design with at least 600 pounds of produced mineral aggregate, in proportion to the anticipated bin percentages and the following materials:

(a) 5-pound of crumb rubber proposed for use
(b) 1 gallon of asphalt cement from the intended supplier
(c) 3 gallons of the proposed mixture of asphalt and rubber
(d) 1-gallon can of the hydrated lime to be used in the asphaltic concrete

Design-Builder shall submit a letter of explanation to the Lead Engineer or mix producer that details the methods of producing aggregate, including wasting, washing, blending, proportioning, etc., and any special or limiting conditions it may propose. The sources of mineral aggregate, the source of asphalt cement and crumb rubber, the asphalt-rubber supplier, and the source and type of mineral filler shall be stated in the letter.

02.04 Mix Design Revisions. Design-Builder shall not change methods of crushing, screening, washing, or stockpiling from those used during production of material used for mix design purposes without developing a new mix design.

During production of asphaltic concrete, the job mix formula may be modified if determined necessary by the Lead Engineer.

If unapproved changes are made in the source of bituminous material, sources of mineral aggregate, production methods, or proportional changes in violation of approved mix design stipulations, stop production until a new job mix formula or mix design is developed, or the Design-Builder complies with the approved job mix formula.

If, during production and on the basis of testing, the Lead Engineer concludes that a change in the job mix formula is necessary, the Design-Builder shall issue a revised job mix formula.

Before beginning full production of asphaltic concrete, Design-Builder shall produce 200 tons of asphaltic concrete and place on the outside shoulder. Production of asphaltic concrete shall be suspended for a maximum of 3 working days or until all test results are available.

02.05 Acceptance of Materials. Design-Builder shall produce aggregate that is free of deleterious materials, clay balls, and adhering films or other material that may prevent thorough coating of the aggregate with the bituminous material.

During asphaltic concrete production, obtain and test samples of aggregate for the determination of the sand equivalent and fractured faces. Should such testing present results that do not meet the requirements for sand equivalent or fractured coarse aggregate particles, Design-Builder shall cease operations and either develop a new mix design or correct deficiencies in the aggregate stockpiles.

02.06 Drying and Heating. A moisture content of 0.5 percent in the asphaltic concrete shall not be exceeded. The moisture content will be calculated in accordance with Arizona Test Method 406. Drying and heating shall be accomplished such that the mineral aggregate is precluded from becoming coated with fuel oil or carbon.

02.07 Placing and Finishing. Before placing asphaltic concrete, Design-Builder shall thoroughly remove striping, clean the surface to be paved by means of vacuum sweep truck or other approved equipment, and tack with asphalt cement.

03 Construction

03.04 Rollers. Design-Builder shall provide a minimum of three static steel wheel rollers, with drums of sufficient width that, when staggered, two rollers can cover the entire width of the mat with one pass. Design-Builder shall provide self-propelled rollers weighing not less than 9.1 metric tons (10 tons) that operate with the drive wheel in the forward position. Vibratory rollers may be used in the static mode only.

03.03 Pavers. Design-Builder shall use a material transfer vehicle (MTV) for all mainline paving operations. The MTV shall be self-propelled and able to operate independently of the paver. The MTV shall have an internal chamber for remixing, including multi-pitch augers, a covered conveyor system to prevent heat loss, and a capacity of 15 to 25 tons. In conjunction with the MTV, Design-Builder shall use a paver hopper insert that prevents the paver wings from being closed and increases hopper capacity.

03.05 Weather Limitations. Design-Builder shall not place asphaltic concrete (asphaltic-rubber) between November 1 and April 1.

Design-Builder shall place asphaltic concrete (asphaltic-rubber) only when the atmospheric temperature and the pavement surface temperature are above 29 °C (85 °F).

03.12 Joints. Design-Builder shall construct longitudinal joints only on the shoulders, or at the edge of travel lanes.

Before a surface course is placed in contact with a cold transverse construction joint, Design-Builder shall trim the cold existing asphaltic concrete to a vertical face by cutting the existing asphaltic concrete back for its full depth and exposing a fresh face. After placement and finishing of the new asphaltic concrete, both sides of the joint should be dense and the joint well-sealed. Design-Builder shall produce a surface in the area of the joint that conforms to the requirements hereinafter specified for surface tolerances when tested with the straightedge placed across the joint.

03.13 Surface Tolerances. Design-Builder shall produce completed surfacing that meets the requirements of Section 10.4.

03.18 Compaction. The temperature of asphaltic concrete just before compaction shall be a minimum of 275 ˚F.

The wheels of compactors shall be wetted with water, or if necessary soapy water, or other product to prevent the asphaltic concrete from sticking to the steel wheels during rolling. If needed, change the rolling procedure to prevent the asphaltic concrete form being picked up.

Design-Builder shall perform compactive rolling, with a minimum of two complete coverages of the mat by each roller, or as directed. A complete coverage is defined as a roller pass forward and back within a given area.

Two compactors shall be used for initial breakdown and shall be maintained no more than 300 feet behind the paving machine. The rollers for final compaction shall follow as closely behind the initial breakdown as possible. As many passes as possible shall be made with the compactors before the temperature of the asphaltic concrete falls below 220 °F.

Bituminous Materials

Asphalt Cement, Grade PG 64-16 shall conform to the following:

TEST	TEST METHOD	REQUIREMENT
Tests on Original Binder:		
Flash point, °C	AASHTO T48	230 Min.
Viscosity @ 135 °C, Pa•s	AASHTO T316	3.00 Max.
Dynamic Shear, G*/sin δ, Test Temp 64 °C @ 10 rad/s, kPa	AASHTO T315	1.00 Min.
Solubility	Nev. T44	99.0 Min.
Tests on Residue from R.T.F.O., AASHTO T240:		
Mass Loss, %	AASHTO T240	1.00 Max.
Dynamic Shear, G*/sin δ, Test Temp 64 °C @ 10 rad/s, kPa	AASHTO T315	2.20 Min.
Tests on Residue from Pressure Aging Vessel, AASHTO R28 @ 100 °C :		
Dynamic Shear, G*sin δ, Test Temp 25 °C @ 10 rad/s, kPa	AASHTO T315	5000 Max.
Creep Stiffness, S, Test Temp -6 °C @ 60 sec, MPa	AASHTO T313[a]	300 Max.
Creep Stiffness, m-value, Test Temp -6 °C @ 60 sec	AASHTO T313[a]	0.300 Min.

[a] If the creep stiffness is below 300 MPa, the direct tension test is not required. If the creep stiffness is between 300 and 600 MPa, the direct tension failure strain can be used in lieu of the creep stiffness requirement. The m-value requirement must be satisfied in both cases.

Asphalt Cement, Grade PG 64-16 not conforming to the requirements specified herein will not be accepted.

The aggregate shall conform to the following requirements:

Sieve Size	Percent Passing by Mass
9.5 millimeter (3/8 inch)	100
4.75 millimeter (No. 4)	30-45
(No. 8)	4-8
75 micrometer (No. 200)	0-2.5

Mineral aggregate shall conform to the requirements in the following table when tested in accordance with the applicable test methods.

Tests on aggregates outlined in the following table, other than abrasion, shall be performed on materials furnished for mix design purposes and composited to the mix design gradation. Abrasion shall be performed separately on samples from each source of mineral aggregate. All sources shall meet the requirements for abrasion:

MINERAL AGGREGATE CHARACTERISTICS

Characteristic	Test Method	Requirement
Combined Bulk Specific Gravity	Arizona Test Method 814	2.35 – 2.85
Combined Water Absorption	Arizona Test Method 814	0-2.5%
Sand Equivalent Method 242	Arizona Test	Minimum 45
Fractured Faces Method 212	Arizona Test fractured faces)	Minimum 90 % (two
Flakiness Index Method 233	Arizona Test	Maximum 25
Abrasion 500 Rev., Max 37%	AASHTO T96	100 Rev., Max 9%

The allowable range of percent absorbed asphalt-rubber shall be 0 to 1.0, when tested in accordance with the applicable section of Arizona Test Method 815.

Asphalt Rubber

Asphalt cement shall conform to the following requirements for the types and grades designated.

Sampling of asphalt cement shall conform to the requirements of AASHTO T 40. Samples shall be taken by Design-Builder and witnessed by the Lead Engineer. The Lead Engineer shall specify the point of sampling and the number of samples.

Design-Builder shall provide convenient facilities for obtaining accurate samples of asphalt cement.

At least 7 working days before the start of asphaltic concrete production, Design-Builder shall obtained a Certificate of Analysis showing complete AASHTO M 320 asphalt cement testing. Laboratory-prepared samples will not be acceptable. Asphaltic concrete production shall not begin until the Lead Engineer evaluates the acceptability of the proposed asphalt cement.

If, during asphaltic concrete production, testing shows that asphalt cement fails to meet the requirements of AASHTO M320 for the specified grade, the asphaltic concrete represented by the corresponding test results shall be evaluated for acceptance. Should the asphaltic concrete be allowed to remain in place, the Design-Builder shall perform an engineering analysis of the expected performance of the asphaltic concrete in which the asphalt cement is incorporated. The analysis shall detail any proposed corrective action and the anticipated effect of such corrective action on the performance. Within 3 working days, the Lead Engineer shall decide whether or not to accept Design-Builder's proposal. If the proposal is rejected, the asphaltic concrete shall be removed and replaced with asphaltic concrete meeting the requirements of the applicable specifications. If Design-Builder's proposal is accepted, the asphalt concrete shall remain in place and any necessary corrective action shall be performed.

During production of asphalt rubber, Design-Builder shall test the blended and cured asphalt rubber for rotational viscosity before incorporating it into the mixture. Design-Builder shall provide a certified tester and a calibrated rotational viscometer to perform this testing. The blended and cured asphalt rubber shall meet the rotational viscosity requirements.

Physical Properties and Tests

Asphalt cement shall be PG64-16 conforming to the requirements of AASHTO M 320. The pressure aging temperature shall be 100 °C.

Crumb rubber shall meet the following gradation requirements when tested in accordance with Arizona Test Method 714.

Sieve Size	Percent Passing
	Type B
No. 10	100
No. 16	65 - 100
No. 30	20 - 100
No. 50	0 - 45
No. 200	0 - 5

The rubber shall have a specific gravity of 1.15 ± 0.05 and shall be free of wire or other contaminating materials, except that Type A rubber shall contain no more than 0.1 percent fabric and Type B shall contain no more than 0.5 percent fabric. Calcium carbonate, up to 4 percent by weight of the granulated rubber, may be added to prevent the particles from sticking together.

Certificates of Compliance shall be submitted confirming that the rubber is a crumb rubber, derived from processing whole scrap tires or shredded tire materials; and that the tires from

which the crumb rubber is produced are taken from automobiles, trucks, or other equipment owned and operated in the United States. The certificates shall also verify that the processing does not produce, as a waste product, casings or other round tire material that can hold water when stored or disposed of above ground.

The asphalt-rubber shall contain a minimum of 20 percent ground rubber by the weight of the asphalt cement.

Asphalt-rubber shall conform to the following:

Property	Requirement Type 1
Grade of base asphalt cement	PG 64-16
Rotational Viscosity: 350 °F; pascal seconds (AASHTO T316)	1.5 - 4.0
Penetration: 39.2 °F, 200 g, 60 sec. (AASHTO T49); minimum	10
Softening Point:(AASHTO T 53); °F, minimum	135
Resilience: 77 °F(ASTM D 5329); %, minimum	30

During production of asphalt-rubber, Design-Builder shall combine materials in conformance with the asphalt-rubber design unless otherwise approved by the Lead Engineer.

The temperature of the asphalt-cement shall be between 350 °F and 400 °F at the time of addition of the ground rubber. No agglomerations of rubber particles in excess of 2 inches in the least dimension shall be allowed in the mixing chamber. The ground rubber and asphalt-cement shall be accurately proportioned in accordance with the design and thoroughly mixed before the beginning of the 1-hour reaction period. Design-Builder shall document that the proportions are accurate and that the rubber has been uniformly incorporated into the mixture. Design-Builder shall also demonstrate that the rubber particles have been thoroughly mixed such that they have been "wetted." The occurrence of rubber floating on the surface or agglomerations of rubber particles shall be evidence of insufficient mixing. The temperature of the asphalt-rubber immediately after mixing shall be between 325 °F and 375 °F. The asphalt-rubber shall be maintained at such temperature for 1 hour before being used.

Before use, the viscosity of the asphalt-rubber shall be tested by the use of a rotational viscotester, which is to be furnished by Design-Builder or the supplier.

Once the asphalt-rubber has been mixed, it shall be kept thoroughly agitated during periods of use to prevent settling of the rubber particles. During the production of asphaltic concrete, the temperature of the asphalt-rubber shall be maintained between 325 °F and 375 °F. However, in no case shall the asphalt-rubber be held at a temperature of 325 °F or above for more than 10 hours. Asphalt-rubber held for more than 10 hours shall be allowed to cool and gradually reheated to a temperature between 325 °F and 375 °F before use. The cooling and reheating shall not be allowed more than once. Asphalt-rubber shall not be held at temperatures above 250 °F for more than 4 days.

For each load or batch of asphalt-rubber, Design-Builder shall provide the Lead Engineer with the following documentation:

(1) The source, grade, amount, and temperature of the asphalt cement before the addition of rubber.

2) The source and amount of rubber and the rubber content expressed as percent by the weight of the asphalt cement.

(3) Times and dates of the rubber additions and resultant viscosity test.

(4) A record of the temperature, with time and date reference for each load or batch. The record shall begin at the time of the addition of rubber and continue until the load or batch is completely used. Readings and recordings shall be made at every temperature change in excess of 20°F, and as needed to document other events that are significant to batch use and quality.

ATTACHMENT 10-2
PLANTMIX BITUMINOUS GAP-GRADED SURFACE

This page intentionally left blank.

Note: References in this Attachment 10-2 to Sections and Subsections not contained herein shall be understood to refer to the corresponding Section or Subsection in the *Uniform Standard Specifications (USS) for Public Works Construction Off-Site Improvements, Clark County Area Nevada*. See Section 26 (*Standards and References*).

SECTION 413

PLANTMIX BITUMINOUS GAP-GRADED SURFACE

01 DESCRIPTION

413.01.01 GENERAL

A. This work shall consist of placing a gap-graded wearing course, bonded to the surface, in accordance with these specifications and in conformity with the lines, grades, thickness, and the typical cross sections shown on the plans or established by the Engineer.

B. The bonded wearing course shall consist of an application of a warm polymer modified asphalt emulsion to create a polymer modified membrane (PMM) followed immediately with a hot gap-graded ultra-thin asphalt concrete surface course (UTACS).

C. This work shall not be started until the Contractor has completed all heavy equipment work or any other work that could scar or mar the finished gap-graded surface.

D. The requirements of Section 401, "Plantmix Bituminous Pavements – General," shall be applicable to this work, except as hereinafter specified.

413.01.02 REFERENCE CODES AND STANDARDS

A. Related Interagency Quality Assurance Committee (IQAC) procedures at:

http://www.clarkcountynv.gov/Depts/public_works/construction_mgmt/Pages/Materials.aspx

413.01.03 REQUIREMENTS

A. Persons involved with the placement of UTACS shall be trained by the manufacturer and/or the Nevada T2 Program.

02 MATERIALS

413.02.01 GENERAL MATERIALS

A. The materials shall conform to Subsection 401.02.01, "Composition of Mixtures," with the following exceptions:

1. Prior to starting work, the Contractor shall submit a proposed job-mix formula in writing for review and approval by the Engineer.

2. The proposed job-mix formula shall be determined by an AASHTO certified testing laboratory, using Nevada Alliance for Quality Transportation Construction

(NAQTC) certified technicians, based on the tests required to determine the gradation and surface capacity for coarse aggregate.

3. The gradation shall be Type S1, S2, or S3 in accordance with Subsection 705.03.08, "Plantmix and Roadmix Asphalt Concrete Surface Course UTACS Type S1 through S3," and the contract Special Provisions.

4. The bituminous materials shall be PG76-22CC in accordance with Section 703.03.02, "Asphalt Cements."

B. Prior to the production of the UTACS gap-graded mix material, all of the contract aggregate quantity shall be stockpiled and shall be tested by the Contractor. The tests are to be submitted to the Engineer no earlier than two weeks prior to placement and may be used only after the Engineer has taken no exception to the results.

413.02.02 COMPOSITION OF GAP-GRADED (UTACS) MIXTURE

A. The plantmix gap-graded Ultra-Thin Asphalt Concrete Surface (UTACS) mixture shall be composed of aggregates and bituminous materials as described in these specifications. The criteria for the design is based on Subsection 413.02.01, “General Materials,” above and the following:

1. Film Thickness (µm):

   a. Gradation surface area factor using the film thickness calculation based on effective asphalt content and aggregate surface area according to Asphalt Institute MS 2 Table 6.1.

   b. The minimum film thickness shall be 10 µm.

2. Specimens for AASHTO T283 testing shall be compacted using the Superpave gyratory compactor applying 100 gyrations or using the Marshall compactor applying 50 blows on each side of the 4 inch diameter sample.

   a. Use mix quantity necessary to obtain compacted samples 2.5 inches □0.05 inch in height.

   b. Further test compacted samples regardless of air void levels achieved after 100 gyrations or 50 blows on each side.

   c. Apply vacuum to samples to be conditioned for 20 seconds and proceed without calculating percent saturation.

   d. Mixing and compaction temperatures are to be recommended by the binder supplier.

   e. The minimum moisture susceptibility shall be 80 percent retained strength.

3. The minimum air voids shall be 4 percent and the maximum aggregate surface shall be 26 square feet per pound.

4. Marshall stabilities are not required.

5. Gradation shall be in accordance with Subsection 705.03.08, "Plantmix and Roadmix Asphalt Concrete Surface Course UTACS Type S1 through S3" of Section 705, "Aggregates for Bituminous Courses."

6. The binder type shall be PG76 22CC as described in Section 703, "Bituminous Materials."

413.02.03 POLYMER MODIFIED MEMBRANE

A. The UTACS pavement shall consist of an application of a warm polymer modified membrane (PMM) asphalt emulsion, as specified under Section 703, "Bituminous Materials," followed immediately with an ultra-thin surface course of quality hot mix asphalt concrete.

B. The PMM emulsion shall be sprayed immediately prior to the application of the surface course so that no wheel or other part of the paving machine comes in contact with the PMM before the surface course is applied.

C. The process of applying the PMM, placement of the surface course, and screed compacting shall be performed in under 5 seconds during normal paving speeds, resulting in a homogeneous surface that can be opened to traffic immediately upon sufficient cooling to 160 degrees F or below.

D. The PMM target design application rate shall be in accordance with Table 1. The PMM application rates shall be adjusted in the field to account for the texture of the existing pavement, traffic, and project uniqueness.

TABLE 1 – PMM APPLICATION RATES

Gradation Type	Application Rate
S1	0.13 gal/sq yd
S2	0.15 gal/sq yd
S3	0.17 gal/sq yd

03 CONSTRUCTION

413.03.01 GENERAL CONSTRUCTION

A. The construction shall conform to Subsection 401.03.01, "Bituminous Mixing Plant," through Subsection 401.03.16, "Surfacing Miscellaneous Areas," with the exceptions below.

413.03.02 GAP-GRADED UTACS PAVING EQUIPMENT

A. The Contractor shall use a self-priming paver, designed and built for the purpose of applying the PMM bond and the UTACS pavement.

1. All other equipment and tools shall be approved by the Engineer.

2. All equipment and tools shall be maintained in satisfactory working condition at all times.

B. The self-priming machine shall meet the following requirements:

1. Be capable of spraying the PMM emulsion, applying the surface course overlay, and providing a smooth surface to the mat in 1 pass at the rate of 35.5 to 92 feet/minute.

2. Shall incorporate a receiving hopper, feed conveyor, insulated storage tank for PMM emulsion, electronic device to determine rate of emulsion application, metered PMM emulsion system, spray bar, and variable width.

3. The integrated distributor-paver shall be equipped with a full-width, heated vibratory screed that can spread and finish the bonded wearing course to the required cross section and grade that produces a uniformly finished surface free from tearing or other blemishes.

C. At all times during paving, the sump pump for excess spray bar emulsion shall be operating as indicated by the required warning light to prevent overflow of the tray. The screed shall have the ability to be crowned at the center, both positively and negatively, and have vertically adjustable extensions to accommodate the desired pavement profile.

D. The PMM shall be applied in accordance with the following:

1. With a mechanical pressure spray bar.

2. Within a tolerance of 0.018 gallon per square yard of the application rate.

3. At a uniform rate for the full paving width.

E. Rollers:

1. Rolling of the wearing course shall consist of a minimum of 2 passes with a steel double drum asphalt roller of minimum weight of 10 tons, before the material temperature has fallen below 185 degrees F.

2. At no time shall the roller or rollers be allowed to remain stationary on the freshly placed asphalt concrete.

3. Rolling shall immediately follow the placement of the UTACS with approved asphalt rollers.

4. Rollers shall be monitored to ensure the rollers are not picking up material and that the setting process is completed while the mat is above 185 degrees F.

5. Rollers shall be well maintained in reliable operating condition and be equipped with functioning water system and scrapers to prevent adhesion of the fresh mix onto the roller drums.

6. Adequate roller units shall be supplied so the rolling will be accomplished promptly following the placement of the material.

7. A release agent (added to the water system) may be required to prevent adhesion of the fresh mix to the roller drum and wheels.

8. Rolling shall normally be done in the static mode.

F. Sweepers: The Contractor shall have a minimum of 1 approved sweeper available at all times during the construction of the surface course to pick up loose material.

G. Material Transfer Vehicle (MTV): An MTV shall be used when placing UTACS, and shall meet the following requirements:

1. Able to remix the UTACS mixture to eliminate truck end segregation, minimize material temperature loss, and deliver a uniform mixture to the paver.

2. Self-propelled machine totally independent of the paver.

3. High-capacity truck unloading system to receive UTACS mix from the haul units.

4. Minimum 25 ton surge capacity to minimize paver start/stops and maximize trucking efficiency.

5. Equipped with a pivoting paver loading conveyor able to swing 55 degrees to either side to allow off-lane paving.

413.03.03 APPLICATION OF GAP-GRADED UTACS SURFACE

A. The UTACS pavement shall not be placed on wet pavement. The pavement surface temperature shall not be less than 50 degrees F and the ambient temperature shall not be less than 50 degrees F and rising.

B. The PMM shall be sprayed by a metered mechanical pressure spray bar at a temperature of 140 degrees F –180 degrees F.

1. The sprayer shall accurately and continuously monitor the rate of spray and provide a uniform application across the entire width to be overlaid.

2. The machine will be equipped with an electronic device by which the rate of emulsion application can be determined while the paver is in operation.

3. The PMM shall be applied manually where the screed extension or handwork is required outside the range of the machine mounted spray bar.

4. Over-application or double application of emulsion on the existing base shall not be permitted.

5. The mix design target PMM shot rate shall be adjusted based upon the existing pavement surface conditions, traffic, and project uniqueness, with the approval of the Engineer.

6. The PMM field-adjusted shot rate shall be reduced by 0.03 gallon/square yard within 150 feet of the intersection, to minimize the risk of flushing under the

action of standing and slow moving traffic, unless a full-width mill transition has been specified in the plans.

7. The Contractor and Engineer shall establish an acceptable range for the spray rate.

8. The PMM shall have a minimum of 2 daily yield verifications to be reported to the Engineer, 1 at midway production and 1 at the end of production.

9. These reports shall be the sum of the rates documented each 100 linear foot by the Contractor QC Inspector.

C. The PMM application rate may be adjusted as directed by the Engineer based on the texture depth of the existing pavement measured according to ASTM E965, "Measuring Pavement Macrotexture Depth Using a Volumetric Technique." Suggestions to adjust the PMM application rate as a function of texture depth of the existing pavement are shown in Table 2.

D. No wheel or other part of the paving machine shall come in contact with the PMM before the surface course is applied. Contractor shall use placement operations and equipment that:

1. Keep surfaces clean and free of contamination and debris prior to placement of the polymer modified asphalt emulsion membrane.

2. Prevent tracking through the polymer modified asphalt emulsion membrane prior to placement of the gap-graded polymer modified asphalt concrete.

E. The surface course shall be applied at a temperature of 302 degrees F – 330 degrees F and shall be spread over the PMM less than 5 seconds after the application of the PMM during normal paving speeds.

TABLE 2 – PMM RATE ADJUSTMENTS DUE TO PAVEMENT TEXTURE

Pavement Type - Texture Description	Texture Depth Range (mm)	PMM Rate Correction	
		l/m2	gal/yd2
Flushed asphalt	<0.5	-0.04 to -0.27	-0.01 to -0.06
Black asphalt	0.5 to 1.0	0	0
Smooth asphalt, non-porous	1.0 to 1.2	0	0
Absorbent asphalt, slightly porous, oxidized	1.2 to 1.7	0.09	0.02
Slightly pocked asphalt, porous, oxidized	1.7 to 2.0	0.18	0.04
Badly pocked asphalt, porous, oxidized	>2.0	0.27	0.06
Asphalt milled surface	N/A	0	0
Asphalt within 150 ft of intersection without mill	N/A	-0.13	-0.03
Asphalt within 150 ft of intersection with mill	N/A	0	0

F. When filling the emulsion tank, no emulsion shall overflow into the paver hopper.

1. Should emulsion be spilled into the paver hopper, paving shall stop and all contaminated material shall be removed from the paver hopper.

2. Under no circumstances shall the contaminated material be placed on the roadway.

G. Overlapping or hot lapping of the bonded wearing course shall not be permitted when paving miscellaneous areas in order to achieve project layout requirements.

H. Material that has been placed through the paving screed or over the polymer modified asphalt emulsion membrane shall not be reintroduced into the paving process.

1. UTACS shall be applied at a thickness such that no aggregate is fractured.

2. The S3 mix shall be applied at a minimum 3/4 inch thickness.

3. The S2 mix shall be applied at a minimum 5/8 inch thickness.

4. The S1 mix shall be applied at a minimum of 9/16 inch thickness.

413.03.04 SURFACE PREPARATION FOR UTACS

A. The following items shall be performed prior to the commencement of paving operations and paid for under the appropriate bid item numbers:

1. Manhole covers, drains, grates, catch basins, and similar utility structures shall be protected and covered with building felt prior to paving, and shall also be clearly referenced for location and adjustment after paving.

2. Thermoplastic traffic markings shall be removed.

3. Pavement cracks and joints greater than 0.25 inches wide shall be cleaned and filled using an approved material and method.

a. There shall be no over-banding of cracks which will be covered by UTACS.

b. Crack sealing shall be completed at least 7 days prior to paving.

4. Surface irregularities greater than 1 inch deep shall be milled and/or filled with a material approved by the Engineer. All repairs shall be completed 1 week prior to paving or as recommended by the sealant manufacturer or the Engineer.

5. The entire pavement surface to be overlaid shall be thoroughly cleaned, giving special attention to accumulated mud and debris. Pressurized water and/or vacuum systems may be required to ensure a clean surface.

6. Cold planing shall be completed as specified herein.

413.03.05 JOINTS

A. Longitudinal joints shall be constructed only on the shoulders or at the edge of the travel lanes.

413.03.06 QUALITY CONTROL ASPECTS

A. PMM application rate shall be checked twice per day using random sample location techniques.

B. Determination of the application rate of the PMM shall be as follows:

1. At the location to be sampled, immediately adjacent to the paving area, use 2 pads approximately 15-inches wide by 20 inches long, placed side by side, to determine the PMM application rate based on the average of 2 application rate measurements.

2. Capture the tare weight of each pad to be used prior to capturing the PMM sample.

3. Place the first pad 5 feet in front of spray bar on the spray paver.

4. Place the second pad in front of the first pad farther away in the travel direction.

5. Set the machine in automatic mode; do not use manual mode when calibrating emulsion application rate.

6. Circulate the emulsion through the spray bars for approximately 5 minutes before spray calibration in order to purge the system.

7. Select the machine ground speed/production rate to be no less than 30 feet per minute.

8. Select the desired emulsion application rate and take a sample at this setting.

9. Weigh each pad that has been sprayed with the PMM.

10. Calculate the net weight of emulsion and convert it into gallons using the PMM weight-per-gallon information provided by the emulsion manufacturer.

11. Divide the gallons of PMM by the pad area and compare with the target application rate in gallon per square yard.

C. A minimum of 3 daily samples of the bituminous wearing course shall be tested for asphalt content and gradation.

1. If the average of the daily test results vary from the job-mix formula by more than the tolerance indicated in Subsection 705.03.08, "Plantmix and Roadmix Asphalt Concrete Surface Course UTACS Type S1 through Type S3," production shall stop.

2. The Contractor shall identify the cause and document what corrective action will be taken.

3. The job-mix formula may be adjusted only as approved by the Engineer.

D. A minimum of 2 daily UTACS mixture yield checks shall be completed, 1 at midday during production and 1 at the end of the day's production, to ensure that mixture application rate requirements defined in Subsection 413.03.03, "Application of Gap-Graded UTACS Surface," are met.

E. Placement Limitations: The UTACS and/or PMM shall not be placed on pavement that has visible surface moisture.

F. The Contractor shall immediately cease operations if any precipitation occurs. If any material is placed during the precipitation event, such material shall be removed and replaced, as directed by the Engineer, at no additional cost to the Contracting Agency.

G. Place UTACS and/or PMM only when the pavement surface temperature is 50º F and rising and the ambient temperature is 50 degrees F and rising.

H. The UTACS shall not be placed if the forecast low from the National Weather Service is 32 degrees F or lower for the night following any single day's paving operation.

I. Because of the minimal depth of the surface course being placed, the course may be damaged if opened to traffic too quickly. Therefore, the new UTACS pavement shall not be opened to traffic until the rolling operation is complete and the material has cooled sufficiently to resist damage (approximately 160 degrees F).

J. No more than 15 minutes shall be allowed to elapse between the delivery trucks carrying the UTACS mix to the paver or 3 cold joints per 1/2 mile. Cold joints are defined as when the last delivery truck leaves the paver, the paver has stopped more than 15 minutes before the next delivery truck is brought to the paver.

413.03.07 SURFACE TOLERANCES FOR UTACS

A. The completed surfacing shall be thoroughly compacted, smooth, and free from ruts, humps, depressions, or irregularities.

1. Any ridges, indentations, or other objectionable marks left in the surface of the bituminous mixture by blading or other equipment shall be removed by rolling or other means.

2. The use of equipment that leaves ridges, indentations, or other objectionable marks in the bituminous mixture shall be discontinued, and other acceptable equipment shall be furnished by the Contractor.

B. The Contractor shall produce completed surfacing which meets the requirements of Subsection 402.03.03.D, "Profilograph Measurement," when required by the Contracting Agency, with the following additions and exceptions to the profilograph measurement:

1. The Contractor shall furnish and operate a profilograph as specified in the subsection noted above at the time and date ordered by the Engineer.

2. Any requirement for grinding shall have a depth selected so that at least 80 percent of the original UTACS thickness is preserved in order to minimize the risk of localized bleeding.

3. Liquidated damages may be assessed, as required by the Contracting Agency, for each such high point that is allowed to remain in place.

4. The profile index requirements herein shall not apply to the pavement within 30 feet of either end of a concrete bridge deck (including approach slabs). The finished surface of such pavement shall, however, meet all other requirements of this section.

413.03.08 UTACS PAVEMENT REPAIRS

A. The Contactor shall pay all costs of UTACS pavement repair activities and implementation, except as otherwise provided herein.

B. The Contractor shall have the right to use such pavement repairs deemed necessary to bring the UTACS pavement up to the performance criteria established in Subsection 413.03.07, "Surface Tolerances for UTACS."

SECTION 703

BITUMINOUS MATERIALS

01 SCOPE

703.01.01 MATERIALS COVERED

A. This specification covers the quality of asphalt cement, liquid asphalt, emulsified asphalt, cationic emulsion, anionic emulsion and rubber-asphalt crack sealant.

02 REQUIREMENTS

703.02.01 CONTRACTOR'S RESPONSIBILITY

A. Bituminous material failing the test requirements of this section, including tolerances, shall be subject to Subsection 109.02, "Scope of Payment."

703.02.02 MATERIAL SOURCE RESPONSIBILITY

A. Bituminous materials supplied under these specifications shall be provided from a source authorized by the Engineer and/or IQAC. The process for authorization may be obtained from the Contracting Agency's Public Works Construction Management Division.

703.02.03 SHIPPING NOTICE

A. Shipping notices shall be mailed upon making shipment and shall contain the following information:

1. Consignee and destination,
2. Agency contract number,
3. Delivery point,
4. Date shipped,
5. Car initials or number of truck transport delivery ticket number,
6. Type and grade of material,
7. Quantity loaded,
8. Loading temperature,
9. Net quantity,
10. Signature of shipper or authorized representative,

B. When shipments of materials arrive on the project after normal working hours, the Contractor shall notify the Engineer sufficiently in advance to make arrangements for an

inspector to be present when the material is sampled. All sampling by the Vendor or Contractor shall be performed or observed by an NAQTC certified technician.

C. Three copies of the shipping notice shall be mailed to the Contracting Agency.

03 PHYSICAL PROPERTIES AND TESTS

703.03.01 REFINERY TEST REPORT

A. Refinery test reports shall be mailed to the Engineer as soon as tests have been completed, and the report shall contain the following data:

1. Date of shipment,
2. Car initials or number of truck transport delivery ticket number,
3. Destination and consignee,
4. Contracting Agency contract number (or purchase order number, if applicable),
5. Type and grade of material,
6. Certificate of grade (certify that material conforms to these specifications, and itemize results on tests performed and date of test),
7. Signature of refinery's authorized representative,

B. The certificate of compliance shall be used as a basis of permitting immediate use of the material on the job and shall represent conditional acceptance only. The certificate of compliance shall include a copy of the tests for that lot shipment.

703.03.02 ASPHALT CEMENTS

A. Asphalt cement shall be prepared by the distillation of crude petroleum. This asphalt shall be homogeneous, free from water, and shall not foam when heated to 347 degrees F.

B. These specifications cover the following viscosity grades: AC 2.5, AC 5, AC 10, AC 20, AC 30, AC 40 and the Superpave Performance Grades (PG) for the Southern Nevada region as listed in Table 1, Table 2, Table 2A, and Table 2B.

TABLE 3 - LOCATION OF BITUMINOUS GRADE USE

Location	Viscosity Grades
Clark County Region below 5,000 feet elevation	PG 76-22CC, AC-30[1], or PG 64-22*[1]
Roads at and above 5,000 feet elevation	PG 64-34CC

1. For use in detours, below PCCP, permanent pavement patches, or other locations as determined by the Engineer.

C. The various grades set forth above shall conform to the requirements and the methods of testing shown in Table 2, Table 2A, and Table 2B.

1. Performance grade material must have been prepared from crude petroleum product.

2. The asphalt cements shall be homogenous, free from water and shall not foam when heated to 347 degrees F.

3. Blending of asphalt cements to produce a specified performance grade shall result in a uniform, homogenous blend with no separation.

4. Modified binders shall be blended at the source of supply and delivered as a completed mixture to the job site.

5. It shall not be transported via railroad car.

6. Only elastomeric Styrene Butadiene Styrene (SBS), Styrene-Butadiene (SB), Styrene-Butadiene Rubber (SBR), and Styrene Ethylbutylene Styrene (SEBS) rubber shall be added to the base binder asphalt cement, to produce a binder that complies with specification requirements.

703.03.03 LIQUID ASPHALTS

A. Liquid asphalts shall consist of materials conforming to the following classifications:

1. Rapid curing (RC) products: Paving asphalt with a penetration of approximately 85 to 100 fluxed or blended with a naphtha solvent.

2. Medium curing (MC) products: Paving asphalt fluxed or blended with a kerosene solvent.

3. Slow curing (SC) products: Natural crude oils or residual oils from crude asphaltic petroleum.

B. When tested in accordance with the standard methods of AASHTO and ASTM, the grades of liquid asphalt shall conform to the requirements specified in Table 2, Table 3, and Table 4.

703.03.04 EMULSIFIED ASPHALT

A. Emulsified asphalt for slurry seal shall conform to CQS 1h as specified in Table 6 when tested in accordance with AASHTO and ASTM.

703.03.05 SLURRY SEAL

A. The slurry seal and its components shall conform to the requirements of Table 7 when tested in accordance with AASHTO, ASTM, and ISSA procedures.

703.03.06 MICROSURFACING

A. The microsurfacing and its components shall conform to the requirements of Table 8 when tested in accordance with AASHTO, ASTM, and International Slurry Seal Association (ISSA) procedures.

703.03.07 POLYMER MODIFIED EMULSION MEMBRANE

A. This material shall consist of a polymer modified asphalt emulsion. Its role is to form a water impermeable seal at the existing pavement surface and to bond the new hot mix to the existing surface. The product shall be smooth and homogeneous and conform to the requirements in Table 10.

TABLE 2 - NEVADA TABLE 2 REQUIREMENTS FOR ASPHALT CEMENT GRADED BY VISCOSITY AT 140°F
(Grading Based on Original Asphalt)

Test	AASHTO Test Method	VISCOSITY GRADE					
		AC-2.5	AC-5	AC-10	AC-20	AC-30	AC-40
Viscosity at 140°F poise	T202	200 - 300	400 - 600	800 - 1,200	1,600 - 2,400	2,400 - 3,600	3,200 - 4,800
Viscosity at 275°F cSt, minimum	T201	125	175	250	300	350	400
Penetration at 77°F 100 g/5 seconds, minimum	T49	220	140	80	60	50	40
Flash point (C.O.C., °F minimum)	T48	325	350	425	450	450	450
Solubility in Trichloroethylene (percent, minimum)	T44	99	99	99	99	99	99
Ductility at 39°F 1 cm/min. cm minimum	T51	50	25	15	5	--	--
Tests on Residue From RTFO							
Loss on heating, percent maximum	T240	--	1	0.5	0.5	0.5	0.5
Viscosity at 140°F poise maximum	T202	1,000	2,000	4,000	8,000	12,000	16,000

TABLE 2A - PERFORMANCE GRADE FOR ORIGINAL MATERIALS

Test	Test Method	PG 76-22CC Modified	PG 64-34CC Modified	PG 64-22
Original Materials				
Flash Point Degrees (°C) - minimum	AASHTO T48	230		
Viscosity (Brookfield) @135°C, Pa·s Maximum	ASTM D4402	3.0	3.0	3.0
Dynamic Shear G*/sin ä = minimum @ 10 rad/s at Grade Test Temp. °C	AASHTO T315	1.3	1.0	1.0
Ductility at 4°C, 5 cm/min. cm - minimum	NDOT T746	20	30	30
#10 Sieve Test, Particulates retained	NDOT T730	0		
Solubility in Trichloroethylene, percent (%) - minimum	AASHTO T44	99		
Polymer Content, % by mass minimum	(1)	3.0	3.0	N/A
Toughness in-lb – minimum(2)	NDOT T745	150	75	N/A
Tenacity in-lb - minimum	NDOT T745	100	50	N/A
If T&T fails, Elastic Recovery, percent (%) - minimum	AASHTO T 301	60	60	N/A

(1) Certificates of compliance provided for the material shall certify that the minimum polymer content is present.
(2) NV T 745 Method of Toughness and Tenacity: Scott Tester (or equivalent), inch-pounds @ 77° F., 20 inches per minute pull with tension head 7/8-inch diameter.

TABLE 2B - PERFORMANCE GRADE FOR RTFO AND PAV CONDITIONING

Tests On Residue From RTFO NDOT T728				
Test	**Test Method**	**PG 76-22CC Modified**	**PG 64-34CC Modified**	**PG 64-22**
Ductility at 5°C, 5cm/min. cm - minimum	NDOT T746	10	10	10
Mass Loss, Percent (%) - maximum	NDOT T728	1.0	1.0	1.0
Dynamic Shear, G*/sin ä = minimum kPa @ 10 rad/s at Test Temp. in °C	AASHTO T315	2.2	2.2	2.2
Test On Residue After PAV				
PAV, Test Temp. in °C	AASHTO R28	110	100	100
Dynamic Shear, G*/sin ä = Max kPa @ 10 rad/s at Grade Test Temp. in °C	AASHTO T315	5,000	5,000	5,000
BBR - Creep Stiffness, S -MPa maximum @ 60 sec, atGrade Test Temp. in °C	AASHTO T313	300	300	300
BBR m-value = minimum @ 60s, at Grade Test Temp. in °C	AASHTO T313	0.300	0.300	0.300
Direct Tension, Failure Strain = % minimum @ 1.0 mm/min, at Grade Test Temp. in °C	AASHTO T314	1.0	1.0	1.0

TABLE 3 - UNIFORM PACIFIC COAST SPECIFICATIONS FOR RAPID CURING (RC) LIQUID ASPHALTS

Test	AASHTO Test Method	ASTM Test Method	GRADES							
			RC-70		RC-250		RC-800		RC-3000	
			Min.	Max.	Min.	Max.	Min.	Max.	Min.	Max.
Kinematic Viscosity at 140°F cSt	--	D2170	70	140	250	500	800	1,600	3,000	6,000
Flash Point (Tag Open Cup), °F	T79	D1310	--	--	80	--	80	--	80	--
Distillation										
Distillate percent of total distillate to 680°F	--	--	10	--	--	--	--	--	--	--
to 437°F	T78	D402	50	--	30	--	15	--	--	--
to 500°F	--		70	--	60	--	45	--	25	--
to 600°F	--	--	85	--	80	--	75	--	70	--
Residue from distillation to 680°F, volume percent by difference	--	--	55	--	65	--	75	--	80	--
Test on Reside from Distillation										
Penetration, 77°F, 100g/5 seconds	T49	D5	80	120	80	120	80	120	80	120
Ductility, 77°F, cm*	T51	D113	100	--	100	--	100	--	100	--
Solubility in Trichloroethylene, %	T44	D2042	99.5	--	99.5	--	99.5	--	99.5	--
Water, %	T55	D95	--	0.2	--	0.2	--	0.2	--	0.2
GENERAL REQUIREMENT: The material shall not foam when heated to application temperature recommended by the Asphalt Institute.										

* If ductility is less than 100, material will be accepted if ductility at 60°F is 100 minimum at a pull rate of 5 cm/min

TABLE 4 - UNIFORM PACIFIC COAST SPECIFICATIONS FOR MEDIUM CURING (MC) LIQUID ASPHALTS

Test	AASHTO Test Method	ASTM Test Method	GRADES							
			MC-70		MC-250		MC-800		MC-3000	
			Min.	Max.	Min.	Max.	Min.	Max.	Min.	Max.
Kinematic Viscosity at 140°F cSt	T201	D2170	70	140	250	500	800	1,600	3,000	6,000
Flash Point (Tag Open Cup), °F	T79	D1310	100	--	150	--	150	--	150	--
Distillation										
Distillate percent of total distillate to 680°F	--	--	--	--	--	--	--	--	--	--
to 437°F	--	--	--	20	--	10	--	--	--	--
to 500°F	T78	D402	20	60	15	55	--	35	--	15
to 600°F	--	--	65	90	60	87	45	80	15	75
Residue from distillation to 680°F, volume percent by difference	--	--	55	--	67	--	75	--	80	--
Test on Reside from Distillation										
Penetration, 77°F, 100g/5 seconds	T49	D5	120	250	120	250	120	250	120	250
Ductility, 77°F, cm*	T51	D113	100	--	100	--	100	--	100	--
Solubility in Trichloroethylene, %	T44	D2042	99.5	--	99.5	--	99.5	--	99.5	--
Water, %	T55	D95	--	0.2	--	0.2	--	0.2	--	0.2
GENERAL REQUIREMENT: The material shall not foam when heated to application temperature recommended by the Asphalt Institute.										

* If penetration of residue is more than 200 and ductility at 77°F is less than 100, material will be accepted if ductility at 60°F is 100+

TABLE 5 - UNIFORM PACIFIC COAST SPECIFICATIONS FOR SLOW CURING (MC) LIQUID ASPHALTS

Test	AASHTO Test Method	ASTM Test Method	GRADES							
			SC-70		SC-250		SC-800		SC-3000	
			Min.	Max.	Min.	Max.	Min.	Max.	Min.	Max.
Kinematic Viscosity at 140°F cSt	T201	D2170	70	140	250	500	800	1,600	3,000	6,000
Flash Point (Tag Open Cup), °F*	T48	D1310	150	--	175	--	200	--	250	--
Distillation										
Total Distillate to 680°F, % by volume	T78	D402	10	30	4	20	2	12	--	5
Tests on Residue From Distillation										
Kinematic Viscosity of Distillation Residue at 140°F, stokes	T201	D2170	4	70	8	85	20	140	40	350
Ductility at 77°F, 5cm/min., cm	T51	D113	100	--	100	--	100	--	100	--
Solubility in Trichloroethylene, %	T44	D2042	99.5	--	99.5	--	99.5	--	99.5	--
Water, %	T55	D95	--	0.5	--	0.5	--	0.5	--	0.5

* Flash point by Cleveland Open Cup may be used for products having a flash point greater than 175°F

TABLE 6 - UNIFORM PACIFIC COAST SPECIFICATIONS FOR ANIONIC EMULSIFIED ASPHALTS

Test	AASHTO Test Method	ASTM Test Method	Rapid Setting				Slow Setting			
			RS-1		RS-2		SS-1		SS-1h	
			Min.	Max.	Min.	Max.	Min.	Max.	Min.	Max.
Test on Emulsions										
Viscosity SSF @ 77°F, sec.	T72	D88	20	100	--	--	20	100	20	100
Viscosity SSF @ 122°F, sec.	T72	D88	--	--	75	400	--	--	--	--
Settlement, 5 days, % [1]	T59	D244	--	5	--	5	--	5	--	5
Storage Stability, 1 day, % [2]	T59	D244	--	1	--	1	--	1	--	1
Demulsibility, 35ml .02N, Calcium Chloride. % [3]	T59	D244	60	--	60	--	--	--	--	--
Cement Mixing Test, %	T59	D244	--	--	--	--	--	2.0	--	2.0
Sieve Test, %	D59	D244	--	0.10	--	0.10	--	0.10	--	0.10
Residue by distillation, %	T59	D244	55	--	63	--	57	--	57	--
Test on Residue from Distillation Test [4]										
Penetration @ 77°F, 100g, 5sec.	T49	D5	100	200	100	200	100	200	40	90
Ductility @ 77°F, 5m/min., cm	T51	D113	40	--	40	--	40	--	40	--
Solubility in Trichloroethylene, %	T44	D2042	97.5	--	97.5	--	97.5	--	97.5	--

[1] The test requirement for settlement may be waived when the emulsified asphalt is used in less than 5 days' time, or the purchaser may require that the settlement test be run from the time the sample is received until it is used, if the elapsed time is less than 5 days.
[2] The 24-hour 1-day storage stability test may be used instead of the 5-day settlement test.
[3] The demulsibility test shall be made within 30 days from the date of shipment.
[4] A harder base asphalt meeting current paving asphalt specifications may be specified with the provision that the test requirements on the Residue from Distillation be waived.

TABLE 7 - UNIFORM PACIFIC COAST SPECIFICATIONS FOR CATIONIC EMULSIFIED ASPHALTS

Test	Test Method		Rapid Setting				Medium Setting				Slow Setting				Quick Setting [6]			
			CRS-1		CRS-2		CMS-2S		CMS-2		CMS-2H		CSS-1		CSS-1h		CQS-1h	
	AASHTO	ASTM	Min.	Max.	Min.	Max.	Min.	Max.	Min.	Max.	Min.	Max.	Min.	Max.	Min.	Max.	Min.	Max.
Test on Emulsions																		
Viscosity SSF @ 77°F, sec.	T72	D88	--	--	--	--	--	--	--	--	--	--	20	100	20	100	20	100
Viscosity SSF @ 122°F, sec.	T72	D88	20	100	100	400	50	450	50	450	50	450	--	--	--	--	--	--
Settlement, 5 days, % [1]	T59	D244	--	5	--	5	--	5	--	5	--	5	--	5	--	5	--	5
Storage Stability, 1 day [2]	T59	D244	--	1	--	1	--	1	--	1	--	1	--	1	--	1	--	1
Demulsibility, 35 ml 0.8% sodium dioctyl sulfosuccinate, % [3]	T59	D244	40	--	40	--	--	--	--	--	--	--	--	--	--	--	--	--
Coating Ability/Water Resistance:	T59	D244	--	--	--	--	--	--	--	--	--	--	--	--	--	--	--	--
Coating, dry aggregate			--	--	--	--	Good	--	Good	--	Good	--	--	--	--	--	--	--
Coating, after spraying			--	--	--	--	Fair	--	Fair	--	Fair	--	--	--	--	--	--	--
Coating, wet aggregate			--	--	--	--	Fair	--	Fair	--	Fair	--	--	--	--	--	--	--
Coating, after spraying			--	--	--	--	Fair	--	Fair	--	Fair	--	--	--	--	--	--	--
Particle Charge Test	T59	D244	Positive		Positive		Positive		Positive		Positive		Positive [5]		Positive [5]		Positive	
Sieve Test, %	T59	D244	--	0.10	--	0.10	--	0.10	--	0.10	--	0.10	--	0.10	--	0.10	--	0.10
Cement Mixing Test, %	T59	D244	--	--	--	--	--	--	--	--	--	--	--	2.0	--	2.0	--	--
Distillation																		
Oil Distillate by volume of emulsion, %	T59	D244	--	3	--	3	--	20	--	12	--	12	--	--	--	--	--	--
Residue, %	T59	D244	60	--	65	--	60	--	65	--	65	--	57	--	57	--	60	--
Tests on Residue from Distillate Test [4]																		
Penetration, 77°F, 100g, 5sec.	T49	D5	100	250	100	250	100	250	100	250	40	90	100	250	40	90	45	60
Ductility, 77°F, 5cm/min., cm	T51	D113	40	--	40	--	40	--	40	--	40	--	40	--	40	--	40	--
Solubility in Trichloroethylene, %	T44	D2042	97.5	--	97.5	--	97.5	--	97.5	--	97.5	--	97.5	--	97.5	--	97.5	--

[1] The test requirement for settlement may be waived when the emulsified asphalt is used in less than 5 days' time, or the purchaser may require that the settlement test be run from the time the sample is received until it is used, if the elapsed time is less than 5 days.
[2] The 24-hour 1-day storage stability test may be used instead of the 5-day settlement test.
[3] The demulsibility test shall be made within 30 days from the date of shipment.
[4] A harder base asphalt meeting current paving asphalt specifications may be specified with the provision that the test requirements on the Residue from Distillation be waived.
[5] Must meet a PH requirement of 6.7 maximum (ASTM E70) if the Particle Charge Test result is inconclusive.
[6] Does not apply to polymer modified emulsion.

TABLE 8 SPECIFICATION FOR SLURRY SEAL MIX

TEST ON MIXTURE	TEST METHOD	REQUIREMENTS
Residual Asphalt, % of dry wt. of aggregate	--	7.5 - 13.5
Consistency, flow	ASTM D3910/ISSA T106	2 - 3 cm
Wet Cohesion, 30-minute set	ISSA T139	12 -13 kg/cm
Wet Cohesion, 60-minute set	ISSA T139	20 - 21 kg/cm
Set Time, 30 minutes	ASTM D3910	Negative
Excess Asphalt by LWT and Sand Adhesion	ASTM T109	50 g/ft² max.
Wet Stripping, % coating	ASTM T114	90 min.
Wet track Abrasion (6-day soak)	ASTM D3910/ISSA T100	75 g/ft² max.
Wet track Abrasion (1-hour soak)	ASTM D3910/ISSA T100	75 g/ft² max.
System Compatibility	ISSA T115	Pass
Mix time @ 77°F	ASTM D3910/ISSA T113	Controllable to 180 sec. minimum

TABLE 9 SPECIFICATION FOR MICRO-SURFACING MIX

TEST ON MIXTURE	TEST METHOD	REQUIREMENTS
Residual Asphalt, % of dry wt. of aggregate	--	5.5 - 9.5
Wet Cohesion, 30-minute set	ISSA T139	12 kg/cm
Wet Cohesion, 60-minute set	ISSA T139	20 kg/cm
Excess Asphalt by LWT and Sand Adhesion	ISSA T109	50 g/ft² max.
Wet Stripping, % coating	ISSA T114	90 min.
Wet track Abrasion (6-day soak)	ASTM D3910/ISSA T100	75 g/ft² max.
Wet track Abrasion (1-hour soak)	ASTM D3910/ISSA T100	50 g/ft² max.
Mix time @ 77°F	ASTM D3910/ISSA T113	Controllable to 120 sec minimum
Mix time @ 104°F	ASTM D3910/ISSA T113	Controllable to 120 sec minimum
Lateral Displacement	ISSA T147	5% max.
Classification Compatibility	ISSA T144	(AAA, BAA) 11 grade points minimum

Table 10 - SPECIFICATION FOR POLYMER MODIFIED EMULSION MEMBRANE

TEST ON EMULSION	Method	Min.	Max.
VISCOSITY @ 77°F, SSF	ASTM D88	20	100
SIEVE TEST, %	AASHTO T59	--	0.05
24-Hour Storage Stability, % [1]	AASHTO T59	--	1
Residue from Distillation @ 400°F, %	AASHTO T59	63	--
Oil portion from distillation ml of oil per 100 g emulsion [2]	AASHTO T59	63	--
TEST ON RESIDUE FROM DISTILLATION			
Solubility in TCE, % [3]	AASHTO T44	97.5	--
Elastic Recovery @ 50°F, % [4]	AASHTO T301	58	--
Penetration @ 77°F, 100 g, 5 sec, dmm	AASHTO T49	60	150

[1] After standing undisturbed for 24 hours, the surface shall show no white, milky colored substance, but shall be a smooth homogeneous color throughout.

[2] ASTM D244 with modifications to include a 400°F ± 10°F maximum temperature to be held for a period of 15 minutes. Alternatively, ASTM D244 (Sections 21-27) Residue by Evaporation may be utilized as a surrogate procedure. However, Residue by Distillation is preferred and shall be used as the reference procedure.

[3] ASTM D5546, "Standard Test Method for Solubility of Asphalt Binders in Toluene by Centrifuge," may be substituted where polymers block the filter in Method D2042.

[4] ASTM D5976, "Standard Specification for Type I Polymer Modified Asphalt Cement for Use in Pavement Construction," Section 6.2 with exception that the elongation is 20 cm and the test temperature is 50°F.

SECTION 704

BASE AGGREGATES

01 SCOPE

704.01.01 MATERIALS COVERED

A. This specification covers the quality and size of mineral materials used in base courses, trench backfill, or other construction locations.

B. The term Source shall mean any of the following:

1. A permanent commercial location.

2. Contractor manufactured material either commercial or on-site.

704.01.02 REFERENCE CODES AND STANDARDS:

A. Related Interagency Quality Assurance Committee (IQAC) procedures at:

http://www.clarkcountynv.gov/Depts/public_works/construction_mgmt/Pages/Materials.aspx

(IQAC website)

02 REQUIREMENTS

704.02.01 GENERAL

A. The mineral aggregate shall be the crushed and screened product from approved aggregate deposits, except that Type I aggregate base need not be crushed. The Engineer reserves the right to prohibit the use of aggregates from any source when:

1. The character of the material is such, in the opinion of the Engineer, as to make improbable the furnishing of aggregates conforming to the requirements of these specifications.

2. The character of the material is such, in the opinion of the Engineer, that undue additional costs may be accrued by the Contracting Agency.

B. The mineral aggregate shall be clean, hard, durable, free from any frozen lumps, deleterious matter, and harmful adherent coatings. Crushed Portland cement concrete and asphaltic concrete pavement will be permitted, subject to the requirements of these specifications. No materials subject to regulation as hazardous wastes as defined in the Nevada Administrative Code 444.8565 shall be allowed.

704.02.02 IQAC SOURCE QUALIFICATION

A. For expediting of material source and type approvals, a listing of qualified materials has been provided on the IQAC website.

B. Any listed material is considered qualified for use without a material testing submittal. However, this does not relieve the Contractor of project testing of the material as required in these specifications.

C. The IQAC posted materials indicated in Table 1 are subject to reapproval annually for continued posting on the IQAC website. The procedure is annotated in Subsection 704.04.02, "IQAC Annual Material Prequalification."

Table 1 – IQAC Materials that Require Annual Qualification

Type II Aggregate Base
Type II Controlled Low Strength Material (CLSM)

Table 2 – Materials that Require 6-Month Qualification

Type II blended with recycled Portland Cement Concrete

704.02.03 DEFICIENCIES

A. If the product of a deposit is deficient in material passing the No. 16 sieve, filler from other approved deposits may be added at the crushing and screening plants. This is not to be construed as a waiver of any of the requirements contained herein.

03 PHYSICAL PROPERTIES AND TESTS

704.03.01 PLASTIC LIMITS

A. When specified, aggregates shall conform to the applicable requirements of the following table:

Table 3 – Plastic Limits

Percentage by Weight Passing 200 Sieve	Plasticity Index Maximum
0.1 to 3.0	15
3.1 to 4.0	12
4.1 to 5.0	9
5.1 to 8.0	6
8.1 to 11.0	4
11.1 to 15.0	3

704.03.02 DRAIN BACKFILL

A. This aggregate shall conform to the following requirements:

Table 4 – Drain Rock Gradation Acceptance Limits

Sieve Sizes	Percentage by Dry Weight Passing Sieve		
	3-Inch Size	2-Inch Size	3/4-Inch Size
3-Inch	100	--	--
2-Inch	90-100	100	--
1-1/2-Inch	70-100	95-100	--
3/4-Inch	0-50	50-100	100
1/2-Inch	--	--	95-100
3/8-Inch	0-10	0-55	70-100
No. 4	--	0-25	0-70
No. 8	0-5	0-15	--
No. 200	0-3	0-3	0-3

B. Unless otherwise specified in the contract documents, the Contractor may use any of the sizes.

Table 5 – Drain Backfill Durability Acceptance Limits

Source Requirement Test	3-Inch Size	2-Inch Size	3/4-Inch Size
Percentage of Wear (500 Rev.)	45% Maximum	45% Maximum	45% Maximum

704.03.03 TYPE I AGGREGATE BASE

A. This aggregate shall conform to the following requirements:

Table 6 – Type I Gradation Acceptance Limits

Sieve Sizes	Percentage by Dry Weight Passing Sieve	
	3-Inch Size	2-Inch Size
3-Inch	100	--
2-Inch	90-100	100
1-1/2-Inch	--	95-100
1-Inch	--	70-90
No. 4	30-65	30-65
No. 16	15-40	15-40
No. 200	2-12	2-12

Table 7 – Type I Acceptance Limits

Project Control Test	Test Method	Requirements
Sieve Analysis	AASHTO T27	Table 6
Sampling Aggregate from Calibrated Conveyor stream or belt cut[1]	AASHTO T2	--
Plasticity Index	AASHTO T90[2]	Table 3
Liquid Limit	AASHTO T89	35 Maximum
Resistance (R Value)	ASTM D2844	60 Minimum
Percentage of Wear (500 Rev.)	AASHTO T96	45% Maximum

704.03.04 TYPE II AGGREGATE BASE

A. This aggregate shall conform to the following requirements:

Table 8 – Type II Gradation Acceptance Limits

Sieve Sizes	Percentage by Dry Weight Passing Sieve
1-Inch	100
3/4-Inch	90-100
No. 4	35-65
No. 16	15-40
No. 200	2-10

Table 9 – Type II Acceptance Limits

Quality Control Test	Test Method	Requirements
Sieve Analysis	AASHTO T27	Table 8
Sampling Aggregate from Calibrated Conveyor stream or belt cut[3]	AASHTO T2	--
Fractured Faces	Nev. T230	70% Minimum
Plasticity Index	AASHTO T90[4]	Table 3
Liquid Limit	AASHTO T89	35 Maximum
Resistance (R Value)	ASTM D2844	78 Minimum for road base
or Resilient Modulus	AASHTO T307	35,000 psi minimum for road base
Percentage of Wear (500 Rev.)	AASHTO T96	45% Maximum
Total Available Water Soluble Sulfates[5]	ASTM D2791 AWWA 4550 E	Less than 0.3% by dry weight of soil.

1 Sampling from a stockpile permitted only after approval of the Engineer; the conveyor device shall be calibrated every 3 months and record attached to sample document.
2 Test specimens shall be prepared following the dry preparation procedure AASHTO T87.
3 Sampling from a stockpile permitted only after approval of the Engineer; the conveyor device shall be calibrated every 3 months and record attached to sample document.
4 Test specimens shall be prepared following the dry preparation procedure AASHTO T87.
5 Required only for placement around waterline pipe.

B. Type II Plantmix Aggregate as specified in Subsection 705.03.01, "Plantmix and Roadmix Bituminous Base and Surface Aggregate, Types Two Fine and Coarse and Three," may be used in lieu of Type II Base Aggregate as specified above.

704.03.05 TYPE III AGGREGATE

A. The soluble sulfate content shall not exceed 0.3 percent by dry weight of soil. The mineral shall be clean, hard, durable, free from any frozen lumps, deleterious matter, and harmful coatings. In addition thereto, the material shall conform to the gradation requirements of Type II aggregate base in accordance with Subsection 704.03.04, "Type II Aggregate Base," with the following property testing:

Table 10 – Type III Acceptance Limits

Quality Control Test	Test Method	Requirements
Sieve Analysis	AASHTO T27	Table 8
Sampling Aggregate from Calibrated Conveyor stream of belt cut[6]	AASHTO T2	--
Plasticity Index	AASHTO T 90[7]	Table 3
Liquid Limit	AASHTO T 89	35 Maximum
No. 200 Sieve	AASHTO T 27	2-15%
Total Available Water Soluble Sulfates[8]	AWWA 3500-NaD AWWA 4550 E	Less than 0.3% by dry weight of soil

704.03.06 CRUSHED ROCK

A. Crushed rock shall be the product from approved aggregate deposits and shall only be used as directed by the Contracting Agency. The mineral aggregate shall be clean, hard, durable, free from any frozen lumps, deleterious matter, and harmful coatings. In addition thereto, the material shall conform to the following gradation requirements:

Table 11 – Crushed Rock Gradation Acceptance Limits

Sieve Sizes	Percentage of Weight Passing
3/8-Inch	100
No. 4	20-80
No. 200	0-15

6 Sampling from a stockpile permitted only after approval of the Engineer.
7 Test specimens shall be prepared following the dry preparation procedure AASHTO T87.
8 Required only for placement around waterline pipe.

Table 12 – Crushed Rock Acceptance Limits

Quality Control Test	Test Method	Requirements
Sieve Analysis	AASHTO T 27	Table 11
Sampling Aggregate From Calibrated Conveyor stream of belt cut[9]	AASHTO T 2	----------
Fractured Faces	Nev. T 230	90% Minimum
Plasticity Index	AASHTO T 90[10]	Table 3
Liquid Limit	AASHTO T 89	35 Maximum
Percentage of Wear (500 Rev.)	AASHTO T 96	45% Maximum
Total Available Water Soluble Sulfates[11]	AWWA 3500-NaD AWWA 4550 E	Less than 0.3% by dry weight of soil

704.03.07 CONTROLLED LOW STRENGTH MATERIAL (CLSM)

A. CLSM shall consist of a low-strength, self-leveling concrete material composed of various combinations of cement, fly ash, aggregate, water, and chemical admixtures. CLSM shall have a design compressive strength at an age of 28 days within the ranges required below for the specified class:

1. Class I - (50 to 150 psi): Specified where the maximum strength is of primary concern due to the desire to have material that can be excavated in the future with relative ease.

2. Class II – (100 to 300 psi): Specified where the minimum strength is of primary concern for pipe support.

3. Class Special (as shown in project specifications or drawings): Specified where project unique criteria, such as erosion control, are the primary concern.

4. Class I and II CLSM:

   a. The mix shall result in a product having a slump in the range of 6 to 10 inches at the time of placement.

   b. The Source of Contractor shall submit a mix design for approval by the Engineer prior to placement.

   c. The mix design shall be supported by laboratory test data verifying the potential of the mix to comply with the requirements for these specifications.

B. CLSM shall be proportioned in general compliance with the methods outlined in ACI 211.1-91, reapproved 1997, "Standard Practice for Selecting Proportions for Normal, Heavyweight, and Mass Concrete." The following materials shall be used:

---

9 Sampling from a stockpile permitted only after approval of the Engineer; the conveyor device shall be calibrated every 3 months and record attached to sample document.

10 Test specimens shall be prepared following the dry preparation procedure AASHTO T87.

11 Required only for placement around waterline pipe.

1. Cement shall meet the requirements of Section 701, "Hydraulic Cement." Type V cement shall be used unless otherwise specified.

2. Fly ash shall meet the requirements of Section 729, "Fly Ash." Fly ash not meeting the requirements of Section 729, "Fly Ash," may be used if prior testing indicates to the satisfaction of the Engineer the ability of the CLSM with this fly ash to meet these specifications.

3. Water shall meet the requirements of Section 722, "Water."

4. Aggregates shall have 100 percent by total weight of the aggregate passing the 1 inch screen and 15 percent or less passing the No. 200 sieve. The aggregate shall meet the plastic limits requirements of Subsection 704.03.01, "Plastic Limits."

5. Chemical admixtures shall meet the requirements of Subsection 702.03.02, "Air-Entraining Admixtures," and Subsection 702.03.03, "Admixtures Other Than Air-Entraining."

   a. Other admixtures specifically approved for CLSM may be used.

   b. All materials proportions shall be measured and the CLSM mixed in accordance with Section 501, "Portland Cement Concrete."

   c. Other proportion measuring and CLSM mixing systems are acceptable, if control can be demonstrated to be satisfactory to the Engineer.

   d. These other methods include continuous feed, volumetric measurement of proportions, and pug mill and continuous mixing plants.

C. If the CLSM mix does not produce a flowable consistency or exhibits excessive bleeding, the mix shall be adjusted.

1. Excessive bleeding is considered to occur when water flows from the CLSM in a manner that causes disturbance or displacement of the exposed surface of the CLSM.

2. Mix adjustments shall include, but not be limited to: aggregate gradation, cementitious material content, admixtures, water content, or a combination of adjustments.

D. The testing procedures for approval of CLSM mix designs by the IQAC or if required in the contract special provisions shall be as follows:

1. The material Source, which may be the Contractor, shall cast one set of six each 4 inch diameter by 8 inch high specimens in split cylinders.

2. No rodding method shall be used for the placement of the CLSM into the cylinders.

3. All field curing and environmental protection shall conform to AASHTO T23, "Test Methods for Making and Curing Concrete Test Specimens in the Field."

4. The cast specimens shall then be laboratory-cured in a 100 percent humidity, temperature-controlled concrete cure room (cure tanks shall not be used).

5. Compressive strength testing shall be performed in accordance with AASHTO T22 and T23 with samples from each set at the ages of 7, 28, and 90 days.

6. A report of the results shall be submitted to the Engineer.

E. Class Special: The compressive strength testing procedures shall be as specified in the project specifications or on the project drawings.

F. Bonded Aggregate Fill (BAF):

1. This material is a crushed rock-cement slurry consistency.

2. BAF may be used only with the prior approval of the Engineer.

3. The material Source shall have it designed under the responsible charge of a Nevada PE, and the mix shall consist of a gap-graded 1/2 inch maximum nominal size crushed gravel with a 1 sack minimum Type V cement and water slurry.

4. The material shall be plant mixed and placed from a truck.

5. Due to the gap-graded nature of the material, it shall not be used where water drainage is an issue and in all cases shall use dams as specified in Subsection 208.03.16, "Drain Backfill."

6. This procedure does not require concrete cylinder break testing; however, it does require a visual inspection and shall be documented in a report to the Engineer summarizing the inspection to be performed as follows:

a. After the first batch is placed and initially cured, excavate to the bottom of the pipe or structure.

b. If a self-supporting vertical face is maintained, the material is functioning properly.

704.03.08 AGGREGATE FOR PORTLAND CEMENT TREATED BASE

A. This aggregate shall conform to the following requirements:

Table 13 – Portland Cement Treated Base Gradation Acceptance Limits

Sieve Sizes	Percentage by Dry Weight Passing Sieve
3-Inch	100
2-Inch	90-100
No. 4	35-75
No. 200	20

Table 14 – Portland Cement Treated Base Acceptance Limits

Test	Test Method	Requirements
Sieve Analysis	AASHTO T27	Table 13
Sampling Aggregate from Calibrated Conveyor stream or belt cut[12]	AASHTO T2	1/1000 Tons per day or portion thereof
Percentage of Wear (500 Rev.)	AASHTO T96	45% Maximum

B. Aggregate for cement or lime treated bases will be sampled as follows:

1. Where the material is being mixed at a stationary plant, samples will be taken from the conveyors just prior to delivery to the mixer and prior to adding lime or cement.

2. Where material is being mixed on the roadbed, samples will be taken after the material has been placed on the roadbed and processed and prior to adding cement or lime.

704.03.09 SHOULDERING MATERIAL

A. This aggregate shall conform to the following requirements:

Table 15 – Shouldering Material Acceptance Limits

Sieve Sizes	Percentage by Dry Weight Passing Sieve
1-Inch	100
3/4-Inch	90-100
No. 4	35-65
No. 16	15-40
No. 200	2-6

704.03.10 AGGREGATE BASE MATERIAL WITH RECYCLED ASPHALT PAVEMENT (RAP) AND CONCRETE

A. The use of recycled asphalt pavement or recycled concrete for Type II Aggregate Base is permitted with the following requirements:

[12] Sampling from a stockpile permitted only after approval of the Engineer. The conveyor device shall be calibrated every 3 months and record attached to sample document.

1. The material must conform to the requirements of Subsection 704.03.04 “Type II Aggregate Base

2. The maximum ratio of crushed concrete to Type II Aggregate Base is 50%. Recycled materials must be substantially free of foreign matter including but not limited to asphalt, base, dirt, reinforcing steel, and have at most 1.5% deleterious material.

3. The maximum ratio of the crushed recycled asphalt concrete pavement (RAP) to Type II Aggregate Base is 30%. The mean oil content shall be 1.2% with a +0.3% tolerance. The Total Oil Content of the blended material (virgin aggregate and RAP) shall not exceed 1.5%.

B. The maximum qualification period is six (6) months for aggregate base materials blended with recycled aggregates. The entire qualification process must be completed prior to the first day of April and the first day of October of each calendar year. The report format, as outlined in Subsection 704.04.05 “Report Format” shall include the sieve analysis for RAP or recycled concrete stockpile, Blended aggregated, the RAP binder content and blended binder content.

04 SOURCE QUALITY CONTROL TESTING

704.04.01 GENERAL

A. There are 2 testing aspects to Source material acceptance.

1. Testing by the Source for annual posting on the IQAC website of qualified materials.

2. Contractor project quality control Source testing for non-qualified materials.

B. The acceptance of the Source material shall be at the production plant while the acceptance of the Contractor-placed material is at the project site.

C. Any laboratory submitting to an agency shall be R 18 AASHTO accredited in the appropriate test method in accordance with Table 16, "Source Quality Control Testing Requirements," where applicable and testing reviewed and stamped by a Nevada professional engineer who has responsible charge of the work. The use of a professional engineer by the Source could be the Source staff engineer or third party, but the professional engineer must have responsible charge of the testing and/or inspection.

704.04.02 IQAC ANNUAL MATERIAL PREQUALIFICATION

A. Each individual location or "pit" shall be referred to as a "Source." The responsibility for testing and inspection is the material Source. Material shall be tested, inspected, and certified in accordance with Table 16 "Source Quality Control Testing Requirements." The Source shall submit to the IQAC agency engineer assigned for that Source. The reviewing agency is listed on the IQAC website page next to the Source material.

B. Test data shall be included with the certifying document.

C. The maximum qualification period is 1 year, or 6 months for aggregate blended with crushed concrete. The entire qualification process shall be completed, in accordance with the sections above, prior to the first day of April, or for aggregates blended with crushed concrete, the first day of April and the first day of October of each year. This includes, but is not limited to, submittal, agency review, all required retesting, and qualification from the IQAC member.

704.04.03 NON-PREQUALIFIED MATERIALS

A. If the material is not posted on the IQAC web page, the Source may elect to submit non-prequalified material to the Engineer for approval prior to use that complies with the above noted specification and shall have been tested within 60 days of the intended use.

704.04.04 SUBMITTAL

A. All tests specified in this section shall be performed.

1. The report(s) shall include any graphical representation of plotted data such as the R value or the Proctor value(s) along with the pit name and location.

2. The most current ASTM, AASHTO, NDOT, and AWWA methods shall be used when performing the tests.

B. All samples shall be "cut" from the "belt." When circumstances do not allow for sampling during production, the Source shall coordinate with the Engineer to identify an alternative plan for sampling.

C. IQAC Annual Submittal

1. For the purposes of IQAC submittal, the Engineer is the IQAC reviewing agency as noted on the IQAC web page.

2. For the annual submittal by the supplier, the material to be approved for use as aggregate shall be obtained and "split" by an AASHTO accredited laboratory with the Engineer present at the time the sample is obtained with the sample large enough for a full suite of testing for the Source and Engineer.

3. The Engineer shall be notified a minimum of 48 hours prior to obtaining the sample.

4. If the Engineer is not present during the sampling of the material, the results for that sample will not be accepted.

5. Sampling shall be performed during normal working hours for the Engineer.

6. If the Source laboratory results are in compliance with the above noted specifications, Source shall submit the test report to the Engineer within 21 days of sampling requesting the review and approval of the materials for the proposed use of the material.

7. Notification by the Source of samples not in compliance with the above noted specifications is requested but not required. Samples without notification or a qualification submittal within the 21 day period will be assumed by the IQAC to be outside the above noted specifications.

8. The agency Engineer for a particular pit may accommodate minor adjustments for "tuning" of an operation. This courtesy shall not be extended during the qualification process.

D. Non-prequalified materials (materials not posted on the IQAC list)

1. The material to be approved for use as aggregate shall be obtained and "split" by an AASHTO accredited laboratory with the Engineer present at the time the sample is obtained with the sample large enough for a full suite of testing for the Source and Engineer.

   a. The Engineer shall be notified a minimum of 48 hours prior to obtaining the sample.

   b. If the Engineer is not present during the sampling of the material, the results for that sample will not be accepted.

   c. Sampling shall be performed during normal working hours for the Engineer.

   d. If the Source laboratory results are in compliance with the above noted specifications, the Source shall submit the test report to the Engineer within 21 days of sampling with a letter requesting the review and approval of the materials report for the proposed use of the material.

2. Notification by the Source of samples not in compliance with the above noted specifications is requested but not required.

   a. Samples without notification or a qualification submittal within the 21 day period will be assumed by the IQAC to be outside the above noted specifications.

   b. The Source shall submit the material test report to the Engineer no earlier than 60 days and no later than 14 days prior to use.

3. The qualification is for one project only.

704.04.05 REPORT FORMAT

A. The report shall be prepared and stamped by, or under the direction of, a professional engineer registered in the State of Nevada. The report shall be on the standard IQAC form and shall include the pit name and location. The report shall include the following:

1. Recommendation by the Source Professional Engineer.

2. The testing results in accordance with the appropriate Table 16, "Source Quality Control Testing Requirements," test methods and reporting requirements, along with any graphs and charts.

B. When "no exceptions" are taken, a conditional posting on the web site will be provided by the IQAC within 10 days of the receipt of the submittal.

C. Discrepancies between test results will be reviewed on a case-by-case basis. The Engineer will notify the aggregate producer of substantial test variations within 10 days of receipt of the qualification submittal.

704.04.06 SAMPLING AND TESTING

A. When the Contractor/Material Source or Engineer acquires aggregate samples at an aggregate production plant, the plant shall provide a calibrated mechanical means for obtaining samples.

1. If a mechanical means is not provided, a belt cut from a stopped conveyor will be required.

2. Any mechanical sampling device shall be approved by the Engineer prior to starting the respective phase of the project, or shall have been approved as part of a prior plant inspection by the Engineer or the Engineer’s representative.

3. The sampling device shall be so constructed to provide for simultaneous "cutting" of the entire section of material being discharged or conveyed, and so constructed that small representative samples may be taken frequently and these samples combined to form the complete sample.

4. The reference method for the mechanical procedure shall be a "belt cut" sample taken from a stopped conveyor belt.

5. Samples of the finished product of the plant shall be obtained prior to or as the material leaves the conveyor belt for the bin or stockpile.

B. Test results run from samples taken will be furnished to the Engineer by the Contractor or the Contractor's representative. The results of such tests shall not be the basis for final acceptance of the material.

C. Sampling for final acceptance of materials will be as required in the appropriate USS sections and in general shall comply with the AASHTO requirements, where applicable, and with any exception to the method(s) listed on the IQAC website.

Table 16 – Source Quality Control Testing Requirements[13]

Spec Section	Description	Item	Reference Specification and/or Test Procedure	Frequency
704.03.02, ***704.03.03***, ***704.03.04***, ***704.03.08***	Drain Rock	Submittal	IQAC and/or Agency Requirements	Annually for IQAC Source Approval OR per project
	Type I, Type II Aggregate	Sampling from calibrated conveyor stream or belt cut	AASHTO T2	1/day at plant
	Cement treated base	Sieve Analysis	AASHTO T11 & T27	1/day at plant
		Percentage of Wear (500 Rev.)	AASHTO T96	Annually for Source Approval OR per project
704.03.04, ***704.03.05***, ***704.03.06***	Drain rock, Type II, and Type III aggregate around water pipe	Total Available Water Soluble Sulfates[14]	AWWA 3500-NaD AWWA 4550 E	1/month at plant
704.03.03, ***704.03.04***	Type I and Type II Aggregate	Plasticity Index	AASHTO T90[15]	1/day at plant
		Liquid Limit	AASHTO T89	1/day at plant
		Resistance (R Value) or Resilient Modulus	ASTM D2844	Annually for IQAC Source Qualification OR per project
			AASHTO T307	Annually for IQAC Source Qualification OR per project
704.03.07	CLSM	Mix Design	***USS 704.03.07***	Annually for IQAC Source Qualification OR per project
		Compressive Strength	***USS 208.02.07*** & AASHTO T22, T23	Annually for IQAC Source Qualification OR per project
	CLSM-BAF	Visual Inspection Report	**USS *208.02.07* Split cylinders**	Annually for IQAC Source Qualification OR per project

13 Review the IQAC website for any exceptions to the listed test methods.
14 Required only for placement around waterline pipe.
15 Test specimens shall be prepared following the dry preparation procedure AASHTO T87.

SECTION 705

AGGREGATES FOR BITUMINOUS COURSES

01 SCOPE

705.01.01 MATERIALS COVERED

A. This specification covers the quality and size of local mineral materials and commercial mineral fillers used in bituminous base and surface courses.

02 REQUIREMENTS

705.02.01 GENERAL

A. The mineral aggregate shall be the crushed and screened product of approved deposits.

B. The Engineer reserves the right to prohibit the use of aggregates from any source when:

1. The character of the material is such, in the opinion of the Engineer, as to make improbable the furnishing of aggregates conforming to these specifications; or

2. The character of the material is such, in the opinion of the Engineer, that undue additional costs may be accrued by the Contracting Agency; or

3. The maximum allowable water absorption of either coarse or fine aggregate exceeds 2.5 percent when tested in accordance with ASTM C127 (coarse aggregate) and ASTM C128 (fine aggregate).

C. The mineral aggregate shall be clean, hard, durable, and free from frozen lumps, deleterious matter, and harmful adherent coatings.

D. When producing plantmix aggregate, all natural fines passing the No. 4 sieve shall be screened from the coarse aggregate and may be reintroduced into the mix at a rate not to exceed 20 percent by dry weight of the combined aggregates.

E. The natural fines may be used only when all applicable mix design criteria have been met.

705.02.02 DEFICIENCIES

A. If the product of any deposit is deficient in the fraction passing the No. 50 sieve, additional filler from other approved deposits meeting the physical requirements may be added.

B. The added material shall be fed to the drier in a uniform manner from a separate stockpile.

C. If the added material is a commercial mineral filler, it shall be uniformly fed directly to the plant. This shall not be construed as a waiver of any of the requirements contained herein.

03 PHYSICAL PROPERTIES AND TESTS

705.03.01 PLANTMIX AND ROADMIX BITUMINOUS BASE AND SURFACE AGGREGATE, TYPES TWO FINE AND COARSE AND THREE

A. The aggregate shall conform to this subsection.

B. Test specimens shall be prepared following dry preparation procedure described in ASTM D4318, Section 10.2 through Section 10.2.5.

TABLE 1 – PLANTMIX AND ROADMIX AGGREGATE GRADATION

Sieve Sizes	Percent By Weight Passing Sieve		
	Type 2 Coarse Arterials	Type 2 Fine Residential/Collector	Type 3
1-Inch	100	100	--
3/4-Inch	84-97	90-100	--
1/2-Inch	66-82	78-94	100
3/8-Inch	56-72	68-84	90-100
No. 4	35-50	50-65	55-85
No. 8	23-38	30-49	32-67
No. 50	5-19	7-25	7-27
No. 200	2-7	2-9	2-10

TABLE 2 – PLANTMIX AND ROADMIX AGGREGATE SPECIFICATIONS

Project Tests	Test Methods	Requirements
Sieve Analysis	AASHTO T27	Above
Sampling Aggregate	ASTM D75	--
Fractured Faces	NEV. T230	Traffic Category I: 90% Minimum (2 fractures minimum) 95% Minimum (1 fracture minimum)
		Traffic Category II: 35% Minimum (2 Fractures minimum)
Plasticity Index	ASTM D4318	All Traffic Categories: 6 Maximum
Liquid Limit	ASTM D4318	All Traffic Categories: 35 Maximum
Methylene Blue Test	AASHTO TP57	10 Maximum
Fine Aggregate Angularity	AASHTO T33	Traffic Category I: 45%

Source Tests	Test Methods	Requirements
Stripping Test	ASTM D1664	Satisfactory
Percentage of Wear (500 Rev.)	ASTM C131	All Traffic Categories: 35% Maximum
Elongation @ 5:1	ASTM D4791	Traffic Category I: 10% Maximum
Soundness Test	ASTM C88	All Traffic Categories: 8% Maximum
Deleterious Materials	ASTM C142	All Traffic Categories: 0.3% Maximum

705.03.02 BLANK

705.03.03 PLANTMIX BITUMINOUS OPEN-GRADED SURFACE AGGREGATE

A. The aggregate shall conform to the following requirements:

TABLE 3 – OPEN GRADE AGGREGATE GRADATION

Sieve Sizes	Percentage By Weight Passing Sieve
1/2-Inch	100
3/8-Inch	90-100
No. 4	35-55
No. 8	5-15
No. 200	0-3

TABLE 4 – OPEN GRADE AGGREGATE SPECIFICATIONS

Project Tests	Test Methods	Requirements
Sieve Analysis	AASHTO T27	Above
Sampling Aggregate	ASTM D75	--
Fractured Faces	NEV. T230	90% Minimum (2 fractures minimum)

Source Tests	Test Methods	Requirements
Percentage of Wear (500 Rev.).	ASTM C131	37% Maximum

705.03.04 COMMERCIAL MINERAL FILLER

A. Commercial mineral filler shall conform to ASTM C977 for quicklime, ASTM C1097 for hydrated lime, and ASTM D3910 and ASTM D242 for slurry seal and microsurfacing.

B. Sampling of the mineral aggregate and mineral filler shall conform to AASHTO T2/ASTM D75 methods.

1. All aggregate shall be from the same source.

2. No field blending will be allowed.

C. When tested according to the following tests, the mineral aggregate shall meet the following requirements:

TABLE 5 - MINERAL FILLER AGGREGATE GRADATION

Property	Test Method	Specification
Sand Equivalent	AASHTO T176/ ASTM D2419	50 Minimum for Slurry and 65 Minimum for Microsurfacing
Plasticity Index	ASTM D4318	NP
Soundness, %	AASHTO T104/ ASTM C88	15 Maximum (using NA_2SO_4)
Abrasion Resistance, %	AASHTO T96/ ASTM C131	30 Maximum. Abrasion test shall be run on the aggregate before it is crushed.

705.03.05 SCREENINGS

A. The screenings shall conform to the following requirements:

TABLE 6 – SCREENINGS GRADATION

Sieve Sizes	Percentage By Weight Passing Sieve	
	1/2-Inch	3/8-Inch
1/2-Inch	100	--
3/8-Inch	90-100	100
No. 4	15-35	20-45
No. 16	0-4	0-6
No. 200	0-2	0-2

TABLE 7 SCREENINGS SPECIFICATIONS

Project Tests	Test Methods	Requirements
Sieve Analysis	AASHTO T27	Above
Sampling Aggregate	ASTM D75	--
Fractured Faces	NEV. T230	90% Minimum (2 fractures minimum)

Source Tests	Test Methods	Requirements
Percentage of Wear (500 Rev.)	ASTM C131	37% Maximum

705.03.06 SAND BLOTTER

A. The sand shall conform to the following requirements:

TABLE 8 – SAND BLOTTER GRADATION

Sieve Sizes	Percentage By Weight Passing Sieve
1/2-Inch	100
No. 4	90-100
No. 16	30-75
No. 200	0-12

TABLE 9 – SAND BLOTTER SPECIFICATIONS

Project Tests	Test Methods	Requirements
Sieve Analysis	AASHTO T27	Above
Sampling Aggregate	ASTM D75	--
Organic Impurities	ASTM C40	--

TABLE 10 - ISSA, TYPE I GRADATION

Sieve Size	Mix Design Range (Percentage By Weight Passing Each Sieve)	Stockpile Tolerance
3/8-Inch	100	0
No. 4	100	0
No. 8	90-100	±5%
No. 16	65–90	±3%
No. 30	40-65	±3%
No. 50	25-42	±3%
No. 100	15-30	±2%
No. 200	10-20	±2%

TABLE 11 - ISSA, TYPE II GRADATION

Sieve Size	Mix Design Range (Percentage By Weight Passing Each Sieve)	Stockpile Tolerance
3/8-Inch	100	0
No. 4	90-100	±5%
No. 8	65-90	±5%
No. 16	45-70	±3%
No. 30	30-50	±3%
No. 50	18-30	±3%
No. 100	10-21	±2%
No. 200	5-15	±2%

TABLE 12 - ISSA, TYPE III GRADATION

Sieve Size	Mix Design Range (Percentage By Weight Passing Each Sieve)	Stockpile Tolerance
3/8-Inch	100	0
No. 4	70-90	±5%
No. 8	45-70	±5%
No. 16	28-50	±3%
No. 30	19-34	±3%
No. 50	12-25	±3%
No. 100	7-18	±2%
No. 200	7-15	±2%

705.03.07 SET CONTROL ADDITIVES

A. The type and quantity of additives in slurry seal and microsurfacing mix shall be determined by the material mix design and conform to the applicable sections of ASTM D3910 and ISSA T102.

705.03.08 PLANTMIX AND ROADMIX ASPHALT CONCRETE SURFACE COURSE UTACS TYPE S1 THROUGH S3

A. The Ultrathin Asphalt Concrete Surface (UTACS) shall use one of the gradation types listed below as required by the Engineer.

Table 13 - Ultrathin Asphalt Concrete Surface (UTACS) Gradations

Sieve Size	Type S1	Type S2	Type S3	Tolerance
3/4-Inch[1]	--	--	100	--
1/2-Inch	--	100	85-100	±6
3/8-Inch	100	85-100	60-80	±6
No. 4	40-55	22-40	22–38	±4
No. 8	19-32	19-32	19-32	±4
No. 16	15-25	15-23	15-23	±3
No. 30	10-18	10-18	10-18	±3
No. 50	8-13	8-13	8-13	±3
No. 100	6-10	6-10	6-10	±3
No. 200	4-7	4-7	4-7	±2

B. Coarse aggregate testing shall comply with Table 2. Coarse aggregate is defined as aggregate that is retained on and above the No. 4 sieve.

Table 14 UTACS Coarse Aggregate Specifications

Tests	Method	Limit
Los Angeles abrasion value, % loss	AASHTO T96	35 Maximum
Soundness, % loss	AASHTO T104	18 Maximum
Magnesium Sulfate or Sodium Sulfate	AASHTO T104	12 Maximum
Flat & Elongated Ratio, % @ 3:1	ASTM D4791	25 Maximum
% Crushed, single face	ASTM D5821	95 Minimum
% Crushed, Two or more Mechanically crushed faces	ASTM D5821	85 Minimum
Micro-Deval, % loss	AASHTO TP58	18 Maximum

C. For the Los Angeles abrasion value, the values shown for these tests are targets for aggregate selection purposes. The results of these tests should not be the sole basis for rejection.

D. Fine aggregate testing shall comply with Table 3.

Table 15 - UTACS Fine Aggregate Specifications

Tests	Method	Limit
Sand Equivalent	AASHTO T176	45 minimum
Methylene Blue (on materials passing 200)	AASHTO TP57	10 maximum
Uncompacted Void Content	AASHTO T304	40 minimum

E. Values for sand equivalent shown for these tests are targets for aggregate selection purposes. If the finished bituminous mixture passes the AASHTO T283 requirement in the Mix Design section, the sand equivalent and methylene blue requirements may be waived.

ATTACHMENT 12-1
CONSTRUCTION CLOSURE TABLES

This page intentionally left blank.

Table 12-1 Permitted Construction Closures During Peak Periods and Off-Peak Periods

I-15 Southbound						
Permitted Closure Number	**Limits**		**Travel Lanes (1)**	**Travel Lanes (2)**	**Construction Closure Requirement**	**Allowable Construction Work Activity**
1-15SB	US 95	Alta Drive	3	0	A maximum of two Construction Closures not to exceed a duration of 2 consecutive days. Work shall be performed beginning no earlier than 10:00 PM Friday and end no later than 5:00 AM Monday.	Construction Work to erect the new H-3055 Bridge over the I-15 Southbound lanes.
2-15SB	D Street	Alta Drive	3	2	A maximum of two Construction Closure with a duration not to exceed a cumulative of 450 total days. Construction Closure shall begin no earlier than Tuesday proceeding the NASCAR Special Event and end no later than November 15th of the current	No limitations.
	Alta Drive	Sahara Ave	4	3		

(1) The minimum number of travel lanes to be open to traffic at all time during the Construction Work unless specified as a Permitted Construction Closure. The minimum number includes auxiliary lanes between ramps but does not include parallel ramps.

(2) The minimum number of travel lanes to be open to traffic at all time during the Construction Work for the Permitted Construction Closures. The minimum number does not include auxiliary lanes between ramps or parallel ramps.

Table 12-2 Permitted Construction Closures During Peak Periods and Off-Peak Periods

I-15 Northbound						
Permitted Closure Number	**Limits**		**Travel Lanes (1)**	**Travel Lanes (2)**	**Construction Closure Requirement**	**Allowable Construction Work Activity**
1-15NB	Sahara Ave Exit	Alta Drive	5	3	A maximum of two Construction Closure with a duration not to exceed a cumulative of 450 total days. Construction Closure shall begin no earlier than Tuesday proceeding the NASCAR Special Event and end no later than November 15th of the current.	No limitations.
	Alta Drive	Symphony Park Ave	5	2		
	Symphony Park Ave	D Street Exit	3	2		

(1) The minimum number of travel lanes to be open to traffic at all time during the Construction Work unless specified as a Permitted Construction Closure. The minimum number includes auxiliary lanes between ramps but does not include parallel ramps.

(2) The minimum number of travel lanes to be open to traffic at all time during the Construction Work for the Permitted Construction Closures. The minimum number does not include auxiliary lanes between ramps or parallel ramps.

Table 12-3 Permitted Construction Closures During Peak Periods and Off-Peak Periods

Permitted Closure Number	Limits		Travel Lanes (1)	Travel Lanes (2)	Construction Closure Requirement	Allowable Construction Work Activity
US 95 Eastbound						
1-95EB	Martin Luther King Blvd	I-15	3	0	A maximum of eight Construction Closures not to exceed a duration of 2 consecutive days per Construction Closure. Work shall be performed beginning no earlier than 10:00 PM Friday and end no later than 5:00 AM Monday.	Construction Work to erect the new H-3055 Bridge over the US 95 eastbound lanes and Construction Work to erect the new I-937 Bridge over the US 95 east bound lanes.
2-95EB	Rancho Drive	Martin Luther King Blvd	4	2	A maximum of three Construction Closures with a duration not to exceed a cumulative of 300 days total.	No limitations.
	Martin Luther King Blvd	I-15	3	2		
US 95 Westbound						
1-95WB	I-15	Martin Luther King Blvd	3	0	A maximum of six Construction Closures not to exceed a duration of 2 consecutive days per Construction Closure. Work shall be performed beginning no earlier than 10:00 PM Friday and end no later than 5:00 AM Monday.	Construction Work to erect the new I-937 Bridge over the US 95 westbound lanes.
2-95WB	I-15	Martin Luther King Blvd	3	2	A maximum of three Construction Closures with a duration not to exceed a cumulative of 300 days total.	No limitations.
	Martin Luther King Blvd	Rancho Drive	4	2		

(1) The minimum number of travel lanes to be open to traffic at all time during the Construction Work unless specified as a Permitted Construction Closure. The minimum number includes auxiliary lanes between ramps but does not include parallel ramps.

(2) The minimum number of travel lanes to be open to traffic at all time during the Construction Work for the Permitted Construction Closures. The minimum number does not include auxiliary lanes between ramps or parallel ramps.

Table 12-4 Permitted Construction Closures During Peak Periods and Off-Peak Periods

I-15 and US 95/I-515 System Interchange Ramps						
Permitted Closure Number	**Directional Movement**		**Travel Lanes (1)**	**Travel Lanes (2)**	**Construction Closure Requirement**	**Allowable Construction Work Activity**
1-NE Ramp	NB I-15	EB US 95 / I-515	2	0	A maximum of one Construction Closure not to exceed a duration of 30 consecutive days.	Construction Work to demolish and erect the northbound H-936N grade separation structure.
1-WS Ramp	WB US 95 / I-515	SB I-15	2	0	A maximum of one Construction Closure not to exceed a duration of 30 consecutive days.	Construction Work to erect the southbound I-2138 grade separation structure.
1-SW Ramp	SB I-15	WB US 95	1	0	A maximum of three Construction Closures with a duration not to exceed a cumulative of180 days total.	No limitations.
1-EN Ramp	EB US 95	NB I-15	2	0	A maximum of four Construction Closures with a duration not to exceed a cumulative of 300 days total.	No limitations.
1 NB I-15/MLK	NB I-15	MLK	1	0	A maximum of six Construction Closures not to exceed a duration of 2 consecutive days per Construction Closure.	Construction Work to erect the new I-938 Bridge over the N I-15 to MLK Ramp.
1-ES Ramp	EB US-95	SB- I-15	2	1	A maximum of one Construction Closure not to exceed a duration of120 consecutive days.	Construction Work to widen bridge I-2139.

(1) The minimum number of travel lanes to be open to traffic at all time during the Construction Work unless specified as a Permitted Construction Closure.

(2) The minimum number of travel lanes to be open to traffic at all time during the Construction Work for the Permitted Construction Closures.

Table 12-5 Permitted Construction Closures During Peak Periods and Off-Peak Periods

Interchange Ramps						
Permitted Closure Number	**Route**	**Movement**	**Travel Lanes (1)**	**Travel Lanes (2)**	**Construction Closure Requirement**	**Allowable Construction Work Activity**
1-R	I-15 SB	SB I-15 exit ramp to Sahara Ave	2	1	A maximum of two Construction Closures with a duration not to exceed a cumulative of 150 days total.	No limitations.
2-R	I-15 SB	Charleston Blvd entrance ramp to SB I-15	1	0	A maximum of two Construction Closures with a duration not to exceed a cumulative of 210 days total.	No limitations.
3-R	I-15 SB	SB I-15 exit ramp to Charleston Blvd	1	0	If the Construction Work for the new HOV direct local street connection (Neon Gateway) is complete, Design-Builder may utilize the new Neon Gateway access for temporary ramp access to Charleston Boulevard. The temporary access including left-hand exit and entrances may be utilized during the Construction Work for Charleston Boulevard ramps. A maximum of two Construction Closure with a duration not to exceed a cumulative of 200 days total.	No limitations.
4-R	I-15 SB	D St entrance ramp to SB I-15	1	0	A maximum of two Construction Closures with a duration not to exceed a cumulative of 180 days total.	No limitations.
5-R	I-15 NB	Sahara Ave entrance ramp to NB I-15	2	1	A maximum of two Construction Closures with a duration not to exceed a cumulative of 120 days total.	No limitations.
6-R	I-15 NB	Martin Luther King Blvd entrance ramp to NB I-15	1	0	A maximum of two Construction Closures with a duration not to exceed a cumulative of 180 days total.	No limitations.

Table 12-5 Permitted Construction Closures During Peak Periods and Off-Peak Periods

Interchange Ramps						
Permitted Closure Number	**Route**	**Movement**	**Travel Lanes (1)**	**Travel Lanes (2)**	**Construction Closure Requirement**	**Allowable Construction Work Activity**
7-R	I-15 NB	NB I-15 exit ramp to Charleston EB	1	0	A maximum of two Construction Closures with a duration not to exceed a cumulative of 150 days total.	No limitations.
8-R	I-15 NB	NB I-15 exit ramp to Charleston Blvd WB	1	0	If the Construction Work for the new HOV direct local street connection (Neon Gateway) is complete, Design-Builder may utilize the new Neon Gateway access for temporary ramp access Charleston Boulevard. The temporary access including left-hand exit and entrances may be utilized during the Construction Work for Charleston Boulevard ramps A maximum of two Construction Closure with a duration not to exceed a cumulative of 60 days total.	No limitations.
9-R	I-15 NB	Charleston Blvd entrance ramp to NB I-15	2	0	If the Construction Work for the new HOV direct local street connection (Neon Gateway) is complete, Design-Builder may utilize the new Neon Gateway access for temporary ramp access to Charleston Boulevard. The temporary access including left-hand exit and entrances may be utilized during the Construction Work for Charleston Boulevard ramps. A maximum of two Construction Closure with a duration not to exceed a cumulative of 140 days total.	No limitations.

Table 12-5 Permitted Construction Closures During Peak Periods and Off-Peak Periods

Interchange Ramps						
Permitted Closure Number	**Route**	**Movement**	**Travel Lanes (1)**	**Travel Lanes (2)**	**Construction Closure Requirement**	**Allowable Construction Work Activity**
10-R	US 95 EB	Rancho Dr entrance ramp to EB US 95	1	0	A maximum of two Construction Closures with a duration not to exceed a cumulative of 60 days total.	No limitations.
11-R	US 95 EB	Martin Luther King Blvd entrance ramp to EB US 95 / I-515	1	0	A maximum of two Construction Closures with a duration not to exceed a cumulative of 150 days total.	No limitations.
12-R	US 95 WB	WB US 95 exit ramp to Rancho Dr	1	0	A maximum of two Construction Closures with a duration not to exceed a cumulative of 30 days total.	Construction Work to widen westbound US 95 at Rancho Dr off-ramp.

(1) The minimum number of travel lanes to be open to traffic at all time during the Construction Work unless specified as a Permitted Construction Closure.

(2) The minimum number of travel lanes to be open to traffic at all time during the Construction Work for the Permitted Construction Closures.

Table 12-6 Permitted Construction Closures During Peak Periods and Off-Peak Periods

Permitted Closure Number	Limits		Travel Lanes (1)	Travel Lanes (2)	Construction Closure Requirement	Allowable Construction Work Activity
Martin Luther King Boulevard (Northbound and Southbound)						
1-MLK	Oakey Blvd	Las Vegas Fire Rescue Station 10		0	A maximum of three Construction Closure with a duration not to exceed a cumulative of 120 days total.	No limitations.
2-MLK	Hastings Ave	Bearden Dr		2	A maximum of three Construction Closure with a duration not to exceed a cumulative of 420 days total. From Pinto Lane to Charleston Boulevard not inclusive of the Pinto Lane intersection. The Pinto Lane intersection shall remain open.	No limitations.
3-MLK	Las Vegas Fire Rescue Station 10	Charleston Blvd		2	A maximum of one Construction Closure not to exceed a duration of 30 consecutive days.	No limitations.
Desert Lane (3) (Northbound and Southbound)						
1-DL	Pinto Ln	Hastings Ave		0	A maximum of one Construction Closure not to exceed a duration of 60 consecutive days.	No limitations.
Pinto Ln (Eastbound and Westbound)						
1-PL	Martin Luther King Blvd	Desert Ln		0	A maximum of one Construction Closure not to exceed a duration of 60 consecutive days.	No limitations.
Wall St (3) (Eastbound and Westbound)						
1-WS	Western Ave	Martin Luther King Blvd		0	A maximum of three Construction Closure with a duration not to exceed a cumulative of 210 days total.	No limitations.

Table 12-6 Permitted Construction Closures During Peak Periods and Off-Peak Periods

Permitted Closure Number	Limits		Travel Lanes (1)	Travel Lanes (2)	Construction Closure Requirement	Allowable Construction Work Activity
Charleston Boulevard (Eastbound and Westbound)						
1-CH	Shadow Lane	Main St		2	A maximum of three Construction Closures with a duration not to exceed cumulative 150 days total.	No limitations.
Grand Central Parkway (Northbound and Southbound)						
1-GP	Charleston Blvd	LV Premium Outlet Dr		2	A maximum of three Construction Closures with a duration not to exceed a cumulative 60 days total.	No limitations.
Alta Drive / Bonneville Avenue (Eastbound and Westbound)						
1-AB	Shadow Lane	Grand Central Parkway		1	A maximum of three Construction Closures with a duration not to exceed a cumulative 150 days total.	No limitations.
Oakey Boulevard / Wyoming Avenue (Eastbound and Westbound)						
1-OW	Ivanhoe Way	Martin Luther King Blvd		1	A maximum of four Construction Closures with a duration not to exceed a cumulative 120 day total.	No limitations.
	Martin Luther King Blvd	Western Ave		1		

(1) The minimum number of travel lanes per direction of travel to be open to traffic at all time during the Construction Work unless specified as a Permitted Construction Closure shall meet or exceed the existing number of lanes as of the Setting Date.

(2) The minimum number of travel lanes per direction of travel to be open to traffic at all time during the Construction Work for the Permitted Construction Closures.

(3) Streets will be permanently closed after Construction Closure to accommodate new Local Agency Infrastructure.

This page intentionally left blank.

ATTACHMENT 14-1
BRIDGE REHABILITATION WORK

This page intentionally left blank.

Summary of Bridge Rehabilitation Work

			Assumed Quantities							
		Item No.	1	2	3	4	5	6	7	8
		Description	Concrete Bridge Deck Repair	Bridge Deck Preparation	Thin Bonded Multilayer Overlay	Replace Strip Seal Expansion Joint Gland	Replace Expansion Joint Headers and Strip Seal Assembly	Replace Pourable Joint Seal	Replace Relief Joint Seal	Barrier Rail Removal & Replacement
Loc No.	Bridge No.	Structure Name / Unit	SQFT	SQYD	SQYD	LINFT	LINFT	LINFT	LINFT	LINFT
1	I-2139R	MLK ramp to I15S (over MLK)	7,181	15,957	15,957	27 (1)				
2	I-2139	US95 SB ramp to I15S (over MLK)	26,443	58,762	58,762	195 (2)			39 (3)	7
3	I-940	I15N to US95N flyover	42,134	93,631	93,631				70 (4)	
4	I-2141	I15S to US95E flyover	21,834	48,521	48,521	27 (5)			54 (6)	
5	I-2141R	I15S to US95W (over ramp)	4,587	10,193	10,193					
6	I-940R	I15N to MLK flyover	21,214	47,143	47,143					
7	G-941R	US95 NB ramp to I15N (over RR)	2,219	4,930	4,930					
8	G-941L	I15 SB ramp to US95/MLK (over RR)	3,050	6,778	6,778		125 (7)		37 (8)	
9	I-939	US95N to I15S flyover	33,126	73,613	73,613					
10	I-2138	I15N/S (over US95E to I15N ramp)	7,413	16,474	16,474				300 (7)	
11	H-946	I515N(US95N) over F St.	8,712	19,360	19,360			518 (9)		
12	H-946R	US95N ramp to I15S (over F St.)	2,535	5,634	5,634					
13	I-837	I15N/S over Sahara	20,201	44,892	44,892	92 (10)				
14	I-837R	I15S to Sahara E flyover	25,677	57,061	57,061					
15	I-2482	I15S to Sahara E tulip ramp	3,756	8,346	8,346					
		Rounded Totals:	**230,100**	**511,300**	**511,300**	**350**	**130**	**520**	**500**	**10**

Notes:

1. Replace gland at east abutment (4" movement).
2. Replace glands at all 5 joints (5" movement).
3. At Abutment 2.
4. At Abutment 1.
5. At Abutment 2 (4" movement).
6. At Abutments 1 and 2.
7. At North and South Abutments.
8. At South Abutment.
9. Remove and replace at all joints.
10. At Abutment 2 of Northbound I-15 (3" movement).

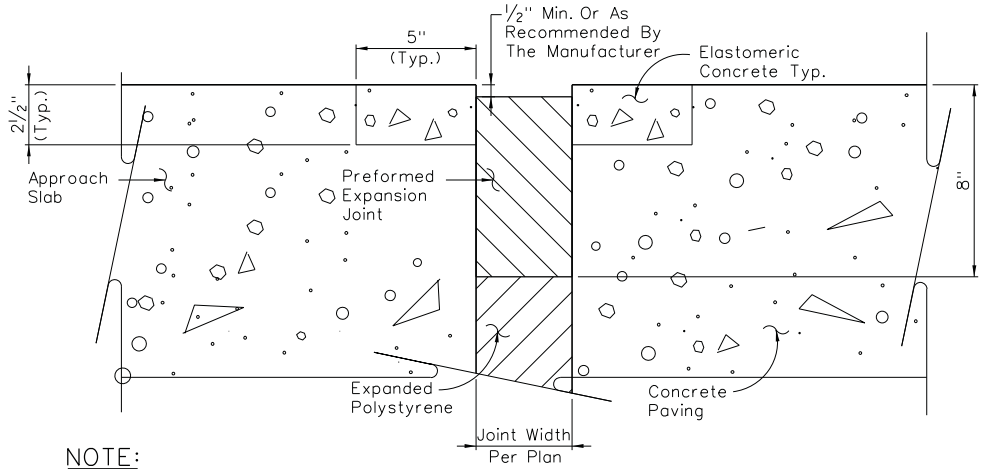

NOTE:

Maintain Joint Gap Between Bridge Rail And Barrier Rail When Applicable. Install Joint Filler Up Interior Face Of Rail A Minimum Of 6".

RELIEF JOINT

NEVADA DEPARTMENT OF TRANSPORTATION

RELIEF JOINT

Signed Original On File		
CHIEF BRIDGE ENGINEER	ADOPTED	REVISION

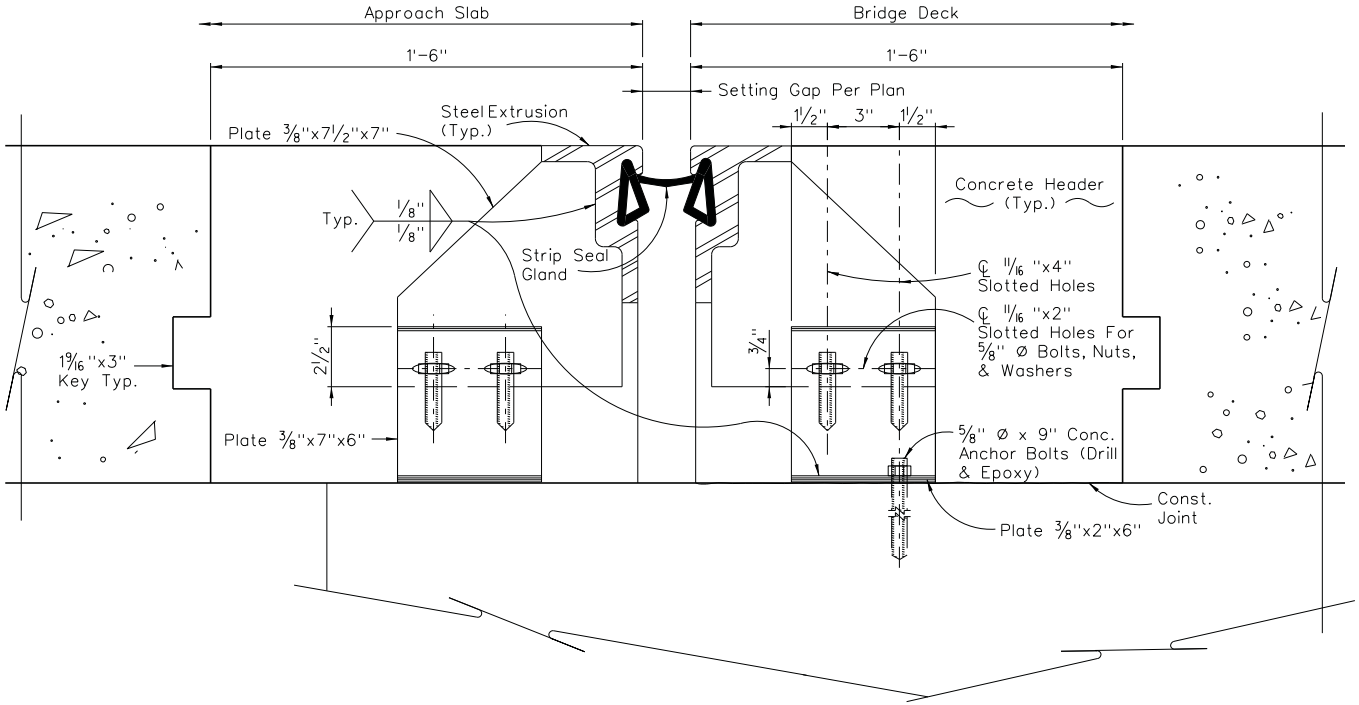

STRIP SEAL EXPANSION JOINT ASSEMBLY

NEVADA DEPARTMENT OF TRANSPORTATION

STRIP SEAL
EXPANSION JOINT

Signed Original On File		
CHIEF BRIDGE ENGINEER	ADOPTED	REVISION

This page intentionally left blank.

ATTACHMENT 19-1
STANDARD DRAWINGS FOR ITS POLES, CABINETS, CONDUITS, PULL BOXES, AND COUNT STATION LOOPS

This page intentionally left blank.

STATE	PROJECT NO.	COUNTY	SHEET NO.
NEVADA			

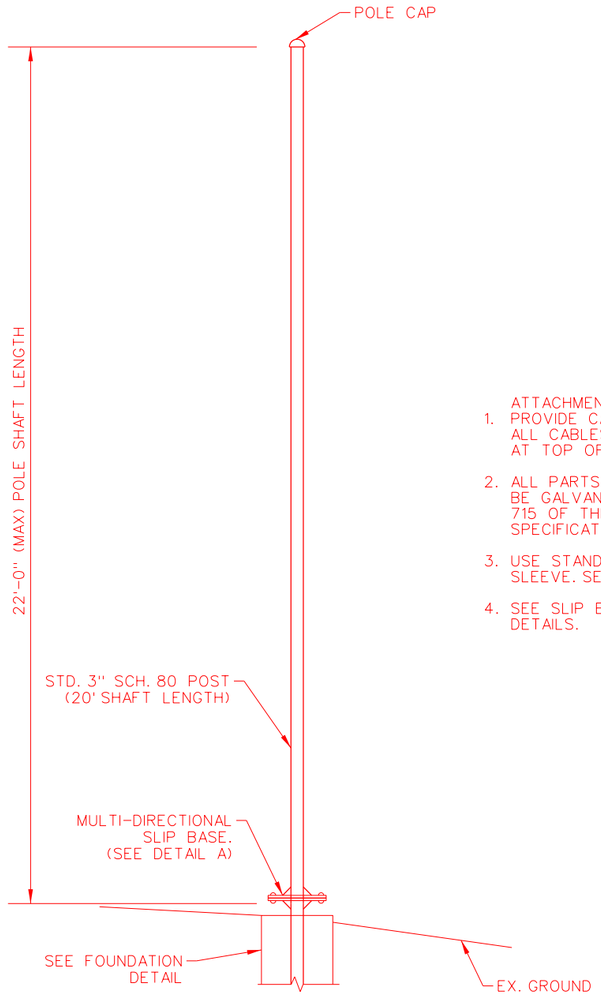

20 FOOT ITS POST

NTS

ATTACHMENT NOTES:

1. PROVIDE CABLE STRAIN RELIEF FOR ALL CABLES. ATTACH TO "J" HOOK AT TOP OF POLE, WHEN PROVIDED.
2. ALL PARTS AND HARDWARE SHALL BE GALVANIZED AS PER SECTION 715 OF THE NDOT STANDARD SPECIFICATIONS, EXCEPT AS NOTED.
3. USE STANDARD WEIGHT PIPE FOR SLEEVE. SEE ASTM A 53.
4. SEE SLIP BASE TOP AND BOTTOM PLATE DETAILS.

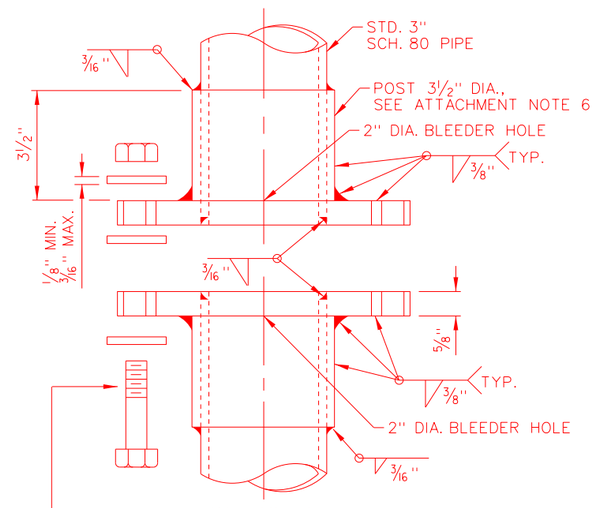

DETAIL A

NTS

5/8"-11 x 3 1/8" BOLT, TYPE 1 ASTM A 325 OR TYPE 1 ASTM A 449 (GRADE 5); EACH WITH THREE USS THROUGH HARDENED WASHERS ASTM F 436 TYPE 1; AND ONE NYLON INSERT STOP NUT ASTM A 563 DH. ALL ITEMS SHALL BE GALVANIZED AS PER MANUFACTURER'S SPECIFICATIONS. TORQUE WITHIN THE RANGE OF 24-29 FT-LB. SEE BOLT DETAIL ON THIS SHEET.

n = A TYPICAL MANUFACTURER'S IDENTIFICATION

TYPE 1 ASTM A449
5/8" x 3-1/8" BOLT

TYPE 1 ASTM A325
5/8" x 3-1/8" BOLT

TOP VIEW
BOLT DETAIL

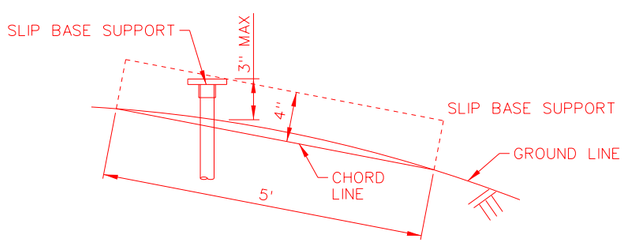

SLIP BASE HEIGHT REQUIREMENT

NTS

GENERAL NOTES:

1. DESIGN SPECIFICATIONS: AASHTO STANDARD SPECIFICATIONS FOR STRUCTURAL SUPPORTS FOR HIGHWAY SIGNS, LUMINAIRES, AND TRAFFIC SIGNALS, 5TH EDITION 2009 WITH 2011 INTERIM REVISIONS.

2. LOADING
   - A. IMPORTANCE FACTORS (If & Ir): 1.0
   - B. DRAG COEFFICIENT (Cd): 0.45 - 2.0 DEPENDING ON SHAPE OF MEMBER AND WIND VELOCITY
   - C. MAXIMUM WIND LOAD: 23.4 psf * Cd * I
   - D. NATURAL WIND GUSTS: 5.2 psf * Cd * I
   - E. WIND SPEED: 90 MPH
   - F. ICE LOAD: 3 psf

3. STRUCTURAL STEEL
   - A. POLE MATERIAL IS ASTM A53 GRADE B STEEL (Fy = 35 Ksi).
   - B. HOT DIP GALVANIZE STRUCTURAL STEEL AFTER FABRICATION IN ACCORDANCE WITH ASTM A123.
   - C. HARDWARE SHALL BE GALVANIZED AS PER ASTM A153

4. MATERIAL REQUIREMENTS
   - A. STRUCTURAL STEEL (OTHER THAN POST)(ASTM A36): Fy = 36 ksi
   - B. DRILLED SHAFT: F'c = 4000 psi
   - C. REINFORCING STEEL : ASTM A615 GRADE 60
     ALL BENDS AND HOOKS SHALL MEET THE REQUIREMENTS OF THE AASHTO LRFD BRIDGE DESIGN SPECIFICATIONS, 5TH EDITION 2010 ARTICLE 5.10. ALL BEND DIMENSIONS FOR REINFORCING STEEL SHALL BE OUT-TO-OUT OF BARS. ALL PLACEMENT DIMENSIONS FOR REINFORCING STEEL SHALL BE TO CENTER OF BARS UNLESS NOTED OTHERWISE.

5. BOLTED CONNECTIONS.
   - A. ACCOMPLISH ALL STRUCTURAL HIGH STRENGTH BOLTING, USING AASHTO M164 BOLTS.
   - B. USE A HARDENED FLAT WASHER BETWEEN THE NUT AND THE CONNECTED PART.
   - C. USE HIGH STRENGTH BOLTS WITH DTI'S OR TENSION CONTROL INDICATORS INSTALLED PER SUBSECTION 506.03.07 OF THE STANDARD SPECIFICATIONS.
   - D. HOT-DIP GALVANIZE ALL STEEL PARTS IN ACCORDANCE WITH ASTM A153 (AASHTO M232).
   - E. HIGH STRENGTH BOLTS SHALL BE HOT-DIP GALVANIZED IN ACCORDANCE WITH ASTM A153, CLASS C, OR MECHANICALLY GALVANIZED IN ACCORDANCE WITH ASTM B695, CLASS 50. WASHERS, NUTS, AND BOLTS IN ANY ASSEMBLY SHALL BE GALVANIZED BY THE SAME PROCESS. LUBRICATE THREADS WITH A DYED LUBRICANT.

6. WELDED CONNECTIONS
   - A. WELDS SHALL BE CONTINUOUS UNLESS OTHERWISE NOTED ON THE PLANS.
   - B. WELD IN ACCORDANCE WITH SECTION 506 OF THE STANDARD SPECIFICATIONS.
   - C. USE ONLY WELDERS QUALIFIED ACCORDING TO ANSI/AASHTO/AWS D1.1-2000, SECTION 4 FOR THE TYPE OF JOINT, ELECTRODE, POSITION OF THE JOINT, AND THE MATERIAL THICKNESS.
   - D. USE ONLY PREQUALIFIED JOINTS.
   - E. TEST ALL FULL PENETRATION GROOVE WELDS ULTRASONICALLY IN ACCORDANCE WITH SECTION 6, PART F OF ANSI/AASHTO/AWS D1.1-2000. ACCEPT OR REJECT EACH WELD DISCONTINUITY ON THE BASIS OF ITS INDICATION RATING AND ITS LENGTH IN ACCORDANCE WITH SECTION 9.3.
   - F. HAVE ALL FILLET WELDS VISUALLY INSPECTED BY QUALIFIED PERSONNEL. ANY WELDS FOUND TO HAVE INCOMPLETE FUSION, OVERLAP OR CRACKS WILL BE REJECTED.

7. FOUNDATION: DRILLED SHAFT.

8. GROUND ALL STRUCTURES IN ACCORDANCE WITH APPLICABLE ELECTRICAL CODES.

9. DIMENSIONS SHALL NOT BE SCALED FROM DRAWINGS.

SHEET 1 OF 2

STATE OF NEVADA
DEPARTMENT OF TRANSPORTATION

20 FOOT ITS 3 INCH POST

STATE	PROJECT NO.	COUNTY	SHEET NO.
NEVADA			

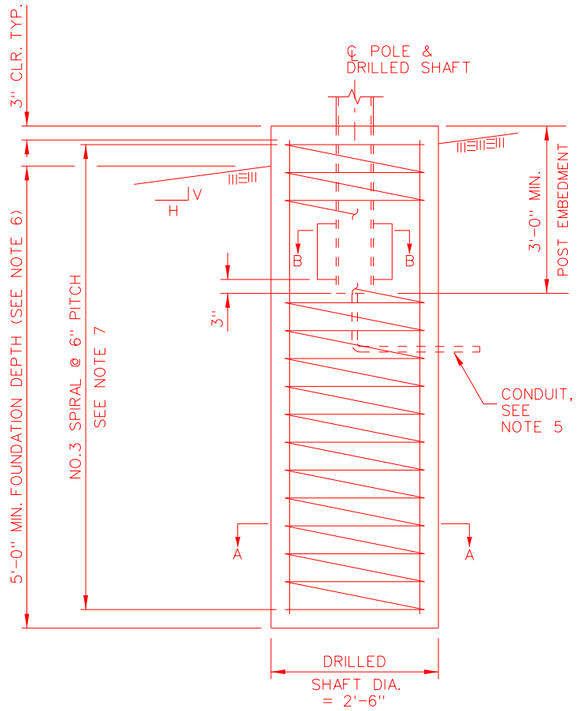

DETAIL 1

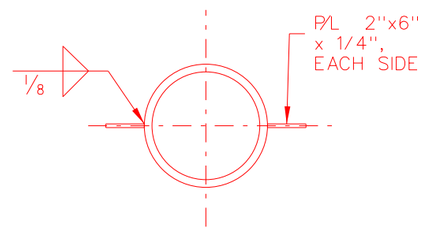

SECTION B-B

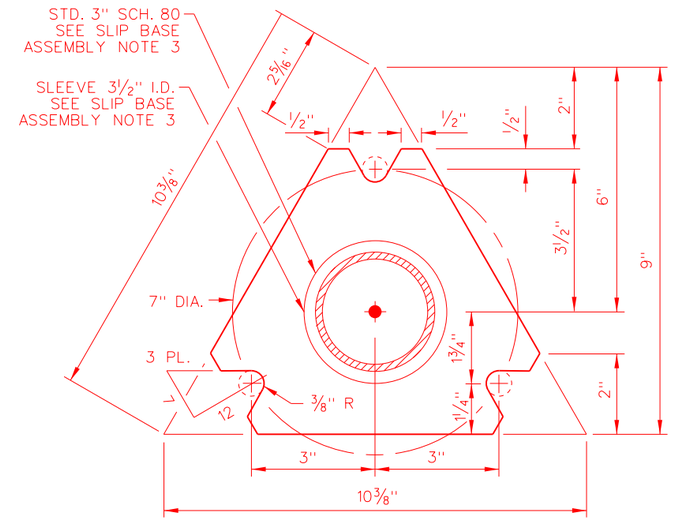

PLAN VIEW
TOP/BOTTOM PLATE

PLATE THICKNESS = 5/8"
NTS

SLIP BASE ASSEMBLY NOTES:

1. ALL PARTS AND HARDWARE SHALL BE GALVANIZED AS PER SECTION 715 OF THE NEVADA DOT STANDARD SPECIFICATIONS, EXCEPT AS NOTED.
2. MULTI-DIRECTIONAL SLIP BASES ARE NOT REQUIRED BEHIND CONCRETE BARRIER RAIL OR BEHIND GUARDRAIL WHERE THE SIGN POST IS GREATER THAN 2'-6" FROM THE BACK SIDE OF THE GUARDRAIL POST.
3. USE STANDARD WEIGHT PIPE FOR PIPE AND SLEEVE, SEE ASTM A53.
4. FOR DETAILS ON SIGN LOCATION POST TYPE PANEL BRACING AND SIGN ISLANDS, SEE STANDARD PLAN T-31.1.1 THRU T-31.1.6.
5. STIFFENER SHALL BE 2½" X 2½" X ⅜" ON BOTH SIDES OF SLIP BOLTS, TOP AND BOTTOM.

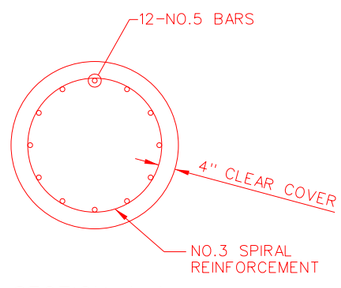

SECTION A-A

SOILS CONDITIONS (FLAT TO 2H:1V)					
SITE FOUNDATION MATERIAL	MINIMUM DRY UNIT WEIGHT (pcf)	INTERNAL FRICTION ANGLE (DEG)	P-Y MODULUS k,(lb/in3)	COHESION (psf)	STRAIN E_{50}
CLAY	100	N/A	N/A	1000	0.007
SAND	100	30 (35*)	25	N/A	N/A

* IN CASE THE SLOPE OF 2H:1V TO 1.5H:1V

GENERAL NOTES:

1. DRILLED SHAFT SHALL BE CLASS "S" PCC AS SPECIFIED IN THE SPECIAL PROVISIONS.
2. PRIOR TO ERECTION OF THE POLE, BACKFILL WHICH IS EQUIVALENT TO THE SURROUNDING MATERIAL SHALL BE IN PLACE AND COMPACTED ACCORDING TO CONTRACT STANDARDS.
3. PILE SHALL BE FORMED 6" MIN. BELOW GROUND SURFACE. REMAINDER TO BE PLACED AGAINST UNDISTURBED MATERIAL.
4. IF NATIVE SOILS ARE DISTURBED PRIOR TO ERECTION OF THE POLE, BACKFILL WHICH IS EQUIVALENT TO THE SURROUNDING MATERIAL SHALL BE IN PLACE AND COMPACTED ACCORDING TO CONTRACT STANDARDS.
5. FOR NUMBER AND SIZE OF CONDUIT IN FOUNDATION, SEE ELECTRICAL PLAN SHEETS.
6. DEPTH OF FOUNDATION (DRILLED SHAFT) WILL BE MEASURED FROM THE LOWEST POINT ON FINISHED GRADE AND LENGTH OF PILE WILL CHANGE ACCORDINGLY.
7. TERMINATE NO. 3 SPIRAL REINFORCEMENT WITH 135 DEGREE HOOK AROUND MAIN VERTICAL REINFORCEMENT, WITH 1½ TURNS @ TOP & BOTTOM.
8. IF SOIL CONSISTS OF ORGANICS OR SATURATED SILT AND CLAY, CONTACT ENGINEER BEFORE PLACING FOUNDATION.
9. BONDING AND GROUNDING SHALL MEET THE NATIONAL ELECTRIC CODE AND NDOT STANDARDS. SEE POLE GROUNDING DETAIL ON NDOT STANDARD PLAN T-30.1.16.
10. STRUCTURAL BOLTS AND OTHER STEEL HARDWARE SHALL BE HOT DIPPED GALVANIZED IN ACCORDANCE WITH AASHTO M 232 (ASTM A 153).

STATE OF NEVADA
DEPARTMENT OF TRANSPORTATION

20 FOOT ITS 3 INCH POST

STATE	PROJECT NO.	COUNTY	SHEET NO.
NEVADA			

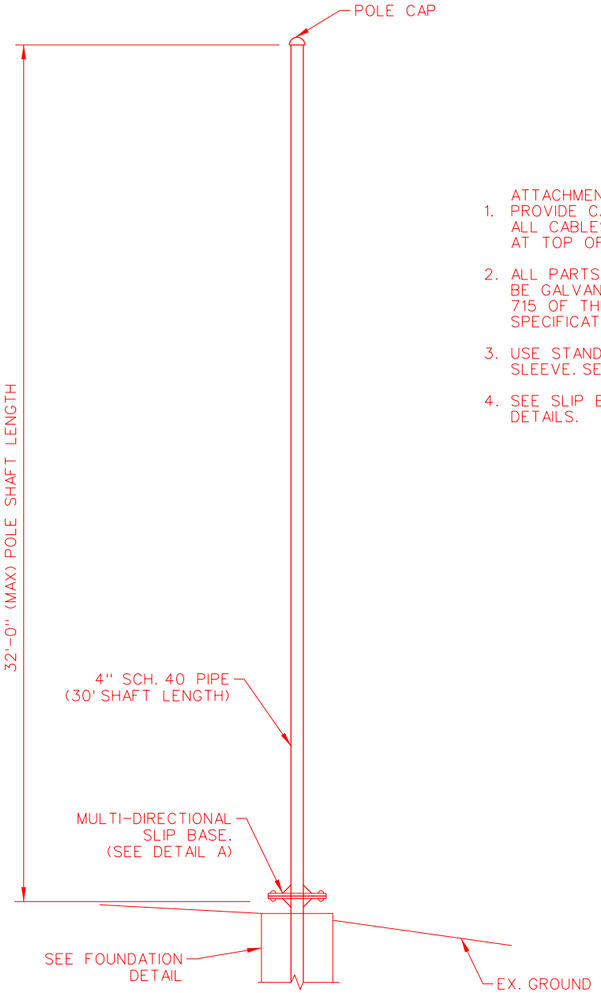

30 FOOT ITS POST

NTS

ATTACHMENT NOTES:

1. PROVIDE CABLE STRAIN RELIEF FOR ALL CABLES. ATTACH TO "J" HOOK AT TOP OF POLE, WHEN PROVIDED.
2. ALL PARTS AND HARDWARE SHALL BE GALVANIZED AS PER SECTION 715 OF THE NDOT STANDARD SPECIFICATIONS, EXCEPT AS NOTED.
3. USE STANDARD WEIGHT PIPE FOR SLEEVE. SEE ASTM A 53.
4. SEE SLIP BASE TOP AND BOTTOM PLATE DETAILS.

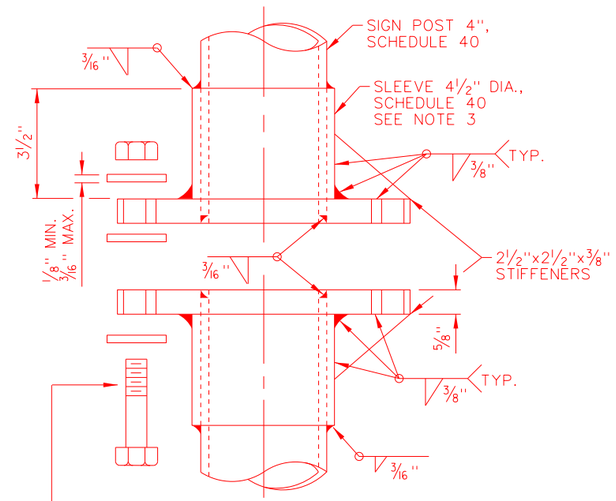

DETAIL A

NTS

5/8"-11 x 3 1/8" BOLT, TYPE 1 ASTM A 325 OR TYPE 1 ASTM A 449 (GRADE 5); EACH WITH THREE USS THROUGH HARDENED WASHERS ASTM F 436 TYPE 1; AND ONE NYLON INSERT STOP NUT ASTM A 563 DH. ALL ITEMS SHALL BE GALVANIZED AS PER MANUFACTURER'S SPECIFICATIONS. TORQUE WITHIN THE RANGE OF 24-29 FT-LB. SEE BOLT DETAIL ON THIS SHEET.

n = A TYPICAL MANUFACTURER'S IDENTIFICATION

TYPE 1 ASTM A449 5/8" x 3-1/8" BOLT

TYPE 1 ASTM A325 5/8" x 3-1/8" BOLT

TOP VIEW
BOLT DETAIL

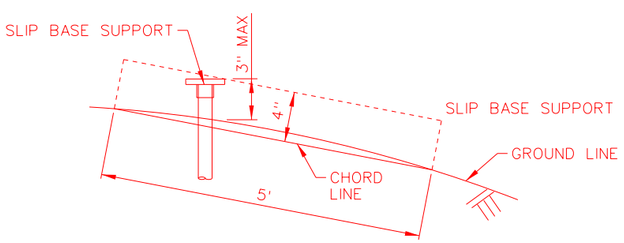

SLIP BASE HEIGHT REQUIREMENT

NTS

GENERAL NOTES:

1. DESIGN SPECIFICATIONS: AASHTO STANDARD SPECIFICATIONS FOR STRUCTURAL SUPPORTS FOR HIGHWAY SIGNS, LUMINAIRES, AND TRAFFIC SIGNALS, 5TH EDITION 2009 WITH 2011 INTERIM REVISIONS.

2. LOADING
   - A. IMPORTANCE FACTORS (If & Ir): 1.0
   - B. DRAG COEFFICIENT (Cd): 0.45 - 2.0 DEPENDING ON SHAPE OF MEMBER AND WIND VELOCITY
   - C. MAXIMUM WIND LOAD: 23.4 psf * Cd * I
   - D. NATURAL WIND GUSTS: 5.2 psf * Cd * I
   - E. WIND SPEED: 90 MPH
   - F. ICE LOAD: 3 psf
   - G. FATIGUE CATEGORY: II

3. STRUCTURAL STEEL
   - A. POLE MATERIAL IS ASTM A53 GRADE B STEEL (Fy = 35 Ksi).
   - B. HOT DIP GALVANIZE STRUCTURAL STEEL AFTER FABRICATION IN ACCORDANCE WITH ASTM A123.
   - C. HARDWARE SHALL BE GALVANIZED AS PER ASTM A153

4. MATERIAL REQUIREMENTS
   - A. STRUCTURAL STEEL (OTHER THAN POST)(ASTM A36): Fy = 36 ksi
   - B. DRILLED SHAFT: F'c = 4000 psi
   - C. REINFORCING STEEL : ASTM A615 GRADE 60
     ALL BENDS AND HOOKS SHALL MEET THE REQUIREMENTS OF THE AASHTO LRFD BRIDGE DESIGN SPECIFICATIONS, 5TH EDITION 2010 ARTICLE 5.10. ALL BEND DIMENSIONS FOR REINFORCING STEEL SHALL BE OUT-TO-OUT OF BARS. ALL PLACEMENT DIMENSIONS FOR REINFORCING STEEL SHALL BE TO CENTER OF BARS UNLESS NOTED OTHERWISE.

5. BOLTED CONNECTIONS.
   - A. ACCOMPLISH ALL STRUCTURAL HIGH STRENGTH BOLTING, USING AASHTO M164 BOLTS.
   - B. USE A HARDENED FLAT WASHER BETWEEN THE NUT AND THE CONNECTED PART.
   - C. USE HIGH STRENGTH BOLTS WITH DTI'S OR TENSION CONTROL INDICATORS INSTALLED PER SUBSECTION 506.03.07 OF THE STANDARD SPECIFICATIONS.
   - D. HOT-DIP GALVANIZE ALL STEEL PARTS IN ACCORDANCE WITH ASTM A153 (AASHTO M232).
   - E. HIGH STRENGTH BOLTS SHALL BE HOT-DIP GALVANIZED IN ACCORDANCE WITH ASTM A153, CLASS C, OR MECHANICALLY GALVANIZED IN ACCORDANCE WITH ASTM B695, CLASS 50. WASHERS, NUTS, AND BOLTS IN ANY ASSEMBLY SHALL BE GALVANIZED BY THE SAME PROCESS. LUBRICATE THREADS WITH A DYED LUBRICANT.

6. WELDED CONNECTIONS
   - A. WELDS SHALL BE CONTINUOUS UNLESS OTHERWISE NOTED ON THE PLANS.
   - B. WELD IN ACCORDANCE WITH SECTION 506 OF THE STANDARD SPECIFICATIONS.
   - C. USE ONLY WELDERS QUALIFIED ACCORDING TO ANSI/AASHTO/AWS D1.1-2000, SECTION 4 FOR THE TYPE OF JOINT, ELECTRODE, POSITION OF THE JOINT, AND THE MATERIAL THICKNESS.
   - D. USE ONLY PREQUALIFIED JOINTS.
   - E. TEST ALL FULL PENETRATION GROOVE WELDS ULTRASONICALLY IN ACCORDANCE WITH SECTION 6, PART F OF ANSI/AASHTO/AWS D1.1-2000. ACCEPT OR REJECT EACH WELD DISCONTINUITY ON THE BASIS OF ITS INDICATION RATING AND ITS LENGTH IN ACCORDANCE WITH SECTION 9.3.
   - F. HAVE ALL FILLET WELDS VISUALLY INSPECTED BY QUALIFIED PERSONNEL. ANY WELDS FOUND TO HAVE INCOMPLETE FUSION, OVERLAP OR CRACKS WILL BE REJECTED.

7. FOUNDATION: DRILLED SHAFT.

8. GROUND ALL STRUCTURES IN ACCORDANCE WITH APPLICABLE ELECTRICAL CODES.

9. DIMENSIONS SHALL NOT BE SCALED FROM DRAWINGS.

SHEET 1 OF 2

STATE OF NEVADA
DEPARTMENT OF TRANSPORTATION

30 FOOT ITS 4 INCH POST

STATE	PROJECT NO.	COUNTY	SHEET NO.
NEVADA			

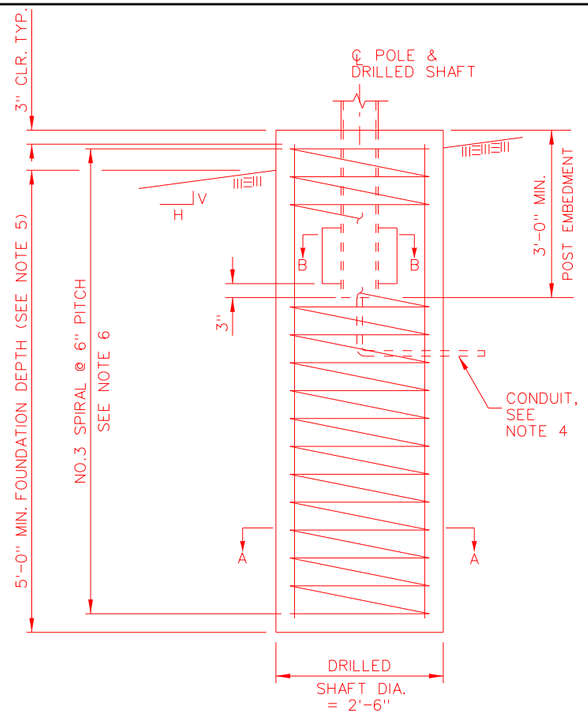

DETAIL 1

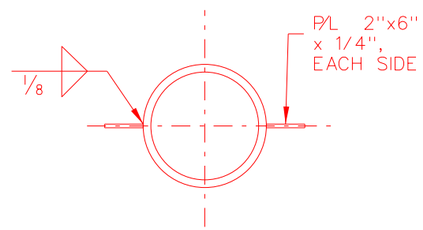

SECTION B-B

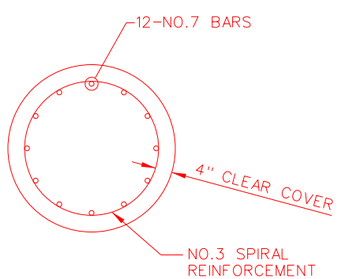

SECTION A-A

SLIP BASE ASSEMBLY NOTES:

1. ALL PARTS AND HARDWARE SHALL BE GALVANIZED AS PER SECTION 715 OF THE NEVADA DOT STANDARD SPECIFICATIONS, EXCEPT AS NOTED.
2. MULTI-DIRECTIONAL SLIP BASES ARE NOT REQUIRED BEHIND CONCRETE BARRIER RAIL OR BEHIND GUARDRAIL WHERE THE SIGN POST IS GREATER THAN 2'-6" FROM THE BACK SIDE OF THE GUARDRAIL POST.
3. USE STANDARD WEIGHT PIPE FOR PIPE AND SLEEVE, SEE ASTM A53.
4. FOR DETAILS ON SIGN LOCATION POST TYPE PANEL BRACING AND SIGN ISLANDS, SEE STANDARD PLAN T-31.1.1 THRU T-31.1.6.
5. STIFFENER SHALL BE 2½" X 2½" X ⅜" ON BOTH SIDES OF SLIP BOLTS, TOP AND BOTTOM.

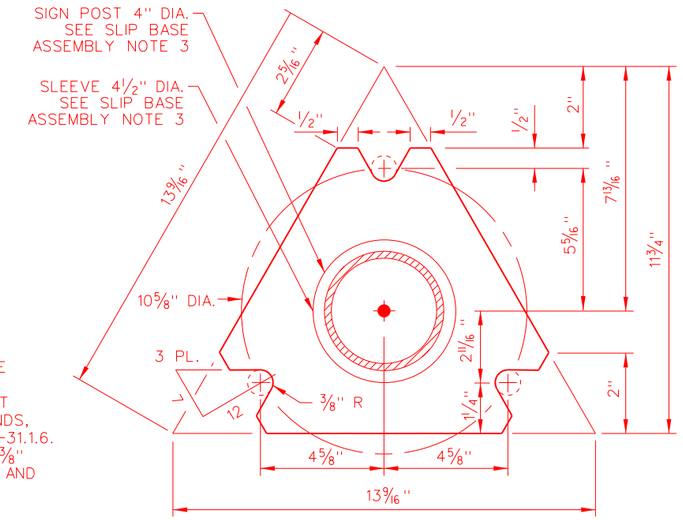

PLAN VIEW
TOP/BOTTOM PLATE

PLATE THICKNESS = 5/8"
NTS

GENERAL NOTES:

1. DRILLED SHAFT SHALL BE CLASS "S" PCC AS SPECIFIED IN THE SPECIAL PROVISIONS.
2. PILE SHALL BE FORMED 6" MIN. BELOW GROUND SURFACE. REMAINDER TO BE PLACED AGAINST UNDISTURBED MATERIAL.
3. IF NATIVE SOILS ARE DISTURBED PRIOR TO ERECTION OF THE POLE, BACKFILL WHICH IS EQUIVALENT TO THE SURROUNDING MATERIAL SHALL BE IN PLACE AND COMPACTED ACCORDING TO CONTRACT STANDARDS.
4. FOR NUMBER AND SIZE OF CONDUIT IN FOUNDATION, SEE ELECTRICAL PLAN SHEETS.
5. DEPTH OF FOUNDATION (DRILLED SHAFT) WILL BE MEASURED FROM THE LOWEST POINT ON FINISHED GRADE AND LENGTH OF PILE WILL CHANGE ACCORDINGLY.
6. TERMINATE NO. 3 SPIRAL REINFORCEMENT WITH 135 DEGREE HOOK AROUND MAIN VERTICAL REINFORCEMENT, WITH 1½ TURNS @ TOP & BOTOTM.
7. IF SOIL CONSISTS OF ORGANICS OR SATURATED SILT AND CLAY, CONTACT ENGINEER BEFORE PLACING FOUNDATION.
8. BONDING AND GROUNDING SHALL MEET THE NATIONAL ELECTRIC CODE AND NDOT STANDARDS. SEE POLE GROUNDING DETAIL ON NDOT STANDARD PLAN T-30.1.16.
9. STRUCTURAL BOLTS AND OTHER STEEL HARDWARE SHALL BE HOT DIPPED GALVANIZED IN ACCORDANCE WITH AASHTO M 232 (ASTM A 153).

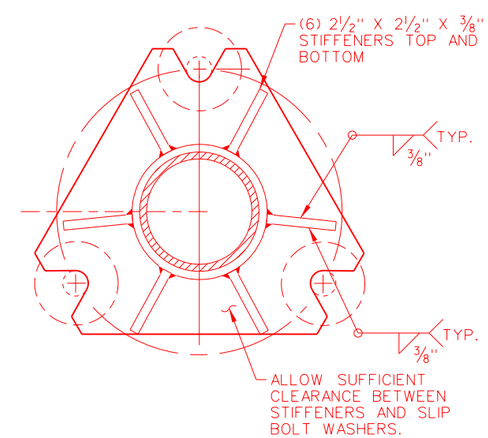

TOP/BOTTOM PLATE
STIFFENER DETAIL

NTS

SOILS CONDITIONS (FLAT TO 2H:1V)					
SITE FOUNDATION MATERIAL	MINIMUM DRY UNIT WEIGHT (pcf)	INTERNAL FRICTION ANGLE (DEG)	P-Y MODULUS k,(lb/in3)	COHESION (psf)	STRAIN E 50
CLAY	100	N/A	N/A	1000	0.007
SAND	100	30 (35*)	25	N/A	N/A

* IN CASE THE SLOPE OF 2H:1V TO 1.5H:1V

SHEET 2 OF 2

STATE OF NEVADA
DEPARTMENT OF TRANSPORTATION

30 FOOT ITS 4 INCH POLE

STATE	PROJECT NO.	COUNTY	SHEET NO.
NEVADA			

PRELIMINARY
SUBJECT TO REVISION
2/3/2015 9:09:05 AM

GENERAL NOTES:

1. DESIGN SPECIFICATIONS: AASHTO STANDARD SPECIFICATIONS FOR STRUCTURAL SUPPORTS FOR HIGHWAY SIGNS, LUMINAIRES, AND TRAFFIC SIGNALS, 5TH EDITION 2009 WITH 2010 INTERIM REVISIONS.

2. LOADING
   A. IMPORTANCE FACTORS (If & Ir): 1.0
   B. DRAG COEFFICIENT (C): 0.45 - 2.0 DEPENDING ON SHAPE OF MEMBER AND WIND VELOCITY
   C. MAXIMUM WIND LOAD: 23.4 psf * Cd * I
   D. NATURAL WIND GUSTS: 5.2 psf * Cd * I
   E. WIND SPEED: 90 MPH
   F. ICE LOAD: 3 psf
   G. FATIGUE CATEGORY: I

3. SERVICEABILITY
   MAXIMUM 1" DISPLACEMENT FOR 30MPH WIND SPEED.

4. STRUCTURAL STEEL
   A. POLE MATERIAL IS ASTM A572 GRADE 50 STEEL.
   B. STEEL TUBING SHALL CONFORM TO ASTM A500, GRADE C.
   C. HOT DIP GALVANIZE STRUCTURAL STEEL AFTER FABRICATION IN ACCORDANCE WITH ASTM A123.
   D. HARDWARE SHALL BE GALVANIZED AS PER ASTM A153

5. MATERIAL REQUIREMENTS
   A. STRUCTURAL STEEL : Fy = 50 ksi
   B. DRILLED SHAFT: F'c= 4000 psi
   C. REINFORCING STEEL : ASTM A615 GRADE 60
   ALL BENDS AND HOOKS SHALL MEET THE REQUIREMENTS OF THE AASHTO LRFD BRIDGE DESIGN SPECIFICATIONS, 5TH EDITION 2010 ARTICLE 5.10. ALL BEND DIMENSIONS FOR REINFORCING STEEL SHALL BE OUT-TO-OUT OF BARS. ALL PLACEMENT DIMENSIONS FOR REINFORCING STEEL SHALL BE TO CENTER OF BARS UNLESS NOTED OTHERWISE.

6. BOLTED CONNECTIONS.
   A. ACCOMPLISH ALL STRUCTURAL HIGH STRENGTH BOLTING, EXCEPT ANCHOR BOLTS, USING AASHTO M164 BOLTS.
   B. USE A HARDENED FLAT WASHER BETWEEN THE NUT AND THE CONNECTED PART.
   C. USE HIGH STRENGTH BOLTS WITH DTI'S OR TENSION CONTROL INDICATORS INSTALLED PER SUBSECTION 506.03.07 OF THE STANDARD SPECIFICATIONS.
   D. FABRICATE ANCHOR BOLTS FROM MATERIAL CONFORMING TO ASTM F1554 GRADE 55.
   E. HOT-DIP GALVANIZE ALL STEEL PARTS IN ACCORDANCE WITH ASTM A153 (AASHTO M232), EXCEPT AS SPECIFIED FOR HIGH STRENGTH BOLTING.
   F. HIGH STRENGTH BOLTS SHALL BE HOT-DIP GALVANIZED IN ACCORDANCE WITH ASTM A153, CLASS C, OR MECHANICALLY GALVANIZED IN ACCORDANCE WITH ASTM B695, CLASS 50. WASHERS, NUTS, AND BOLTS IN ANY ASSEMBLY SHALL BE GALVANIZED BY THE SAME PROCESS. DTI SHALL BE MECHANICALLY GALVANIZED IN ACCORDANCE WITH ASTM B695. LUBRICATE THREADS WITH A DYED LUBRICANT.

7. WELDED CONNECTIONS
   A. WELDS SHALL BE CONTINUOUS UNLESS OTHERWISE NOTED ON THE PLANS.
   B. WELD IN ACCORDANCE WITH SECTION 506 OF THE STANDARD SPECIFICATIONS.
   C. USE ONLY WELDERS QUALIFIED ACCORDING TO ANSI/AASHTO/AWS D1.1-2000, SECTION 4 FOR THE TYPE OF JOINT, ELECTRODE, POSITION OF THE JOINT, AND THE MATERIAL THICKNESS.
   D. USE ONLY PREQUALIFIED JOINTS.
   E. TEST ALL FULL PENETRATION GROOVE WELDS ULTRASONICALLY IN ACCORDANCE WITH SECTION 6, PART F OF ANSI/AASHTO/AWS D1.1-2000. ACCEPT OR REJECT EACH WELD DISCONTINUITY ON THE BASIS OF ITS INDICATION RATING AND ITS LENGTH IN ACCORDANCE WITH SECTION 9.3.
   F. HAVE ALL FILLET WELDS VISUALLY INSPECTED BY QUALIFIED PERSONNEL. ANY WELDS FOUND TO HAVE INCOMPLETE FUSION, OVERLAP OR CRACKS WILL BE REJECTED.

8. GROUTING
   A. SHIM BASE PLATES TO FINISH ELEVATION AND COMPLETELY FILL PLATE AREA WITH A HIGH STRENGTH, NON-FERROUS, NON-SHRINK GROUT.
   B. FORMULATE GROUT TO COMPLY WITH THE ASTM C1107.
   C. TAPER ALL FINISHED SURFACES AT 45 DEGREE +/-.

9. FOUNDATION: DRILLED SHAFT.

10. GROUND ALL STRUCTURES IN ACCORDANCE WITH APPLICABLE ELECTRICAL CODES.

11. DIMENSIONS SHALL NOT BE SCALED FROM DRAWINGS.

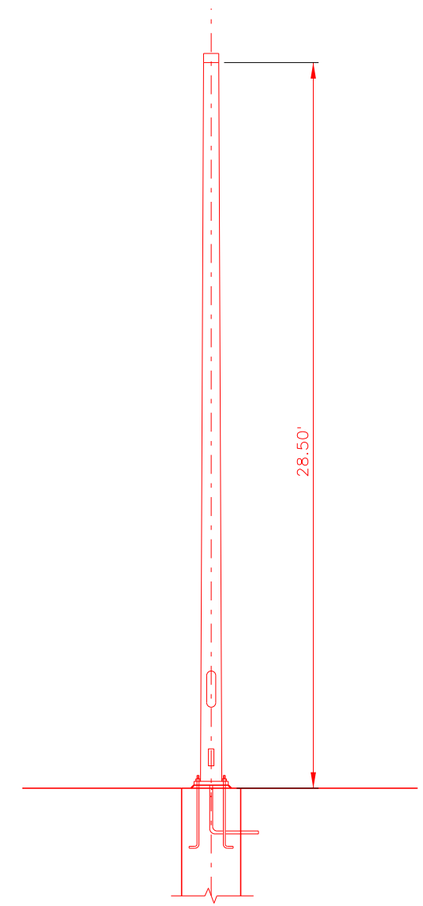

30 FOOT ITS POLE
NTS

SHEET 1 OF 3

STATE OF NEVADA
DEPARTMENT OF TRANSPORTATION

30 FOOT ITS POLE

STATE	PROJECT NO.	COUNTY	SHEET NO.
NEVADA			

PRELIMINARY

SUBJECT TO REVISION
2/3/2015 9:08:52 AM

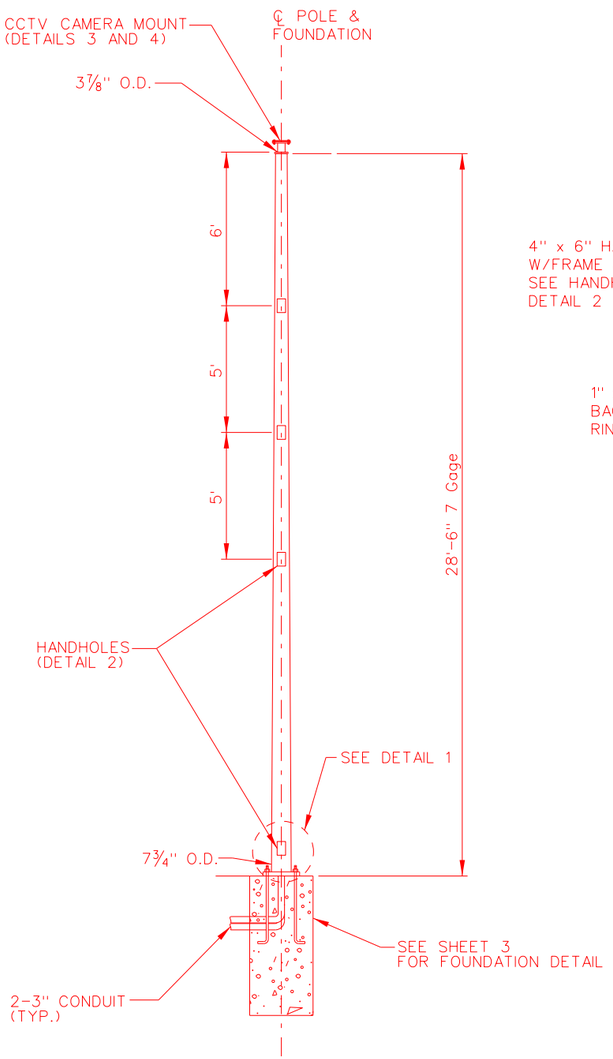

TYPICAL POLE ELEVATION

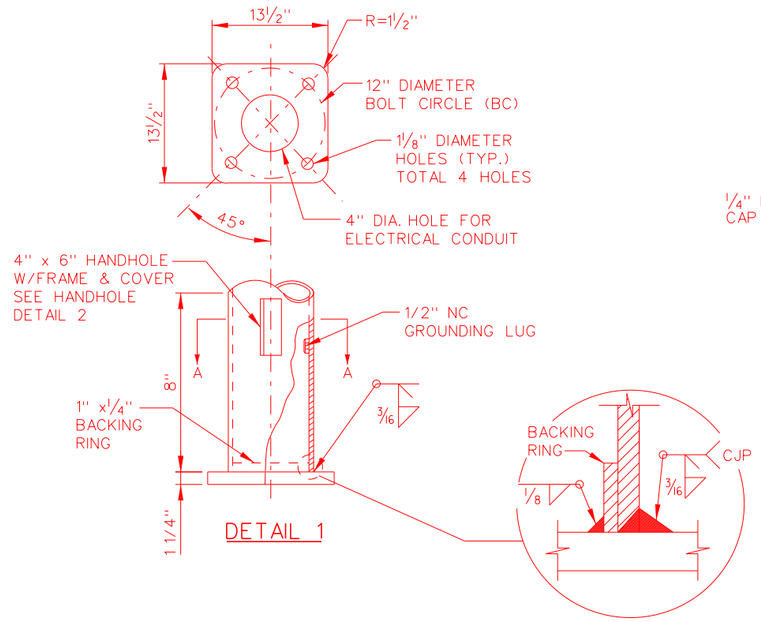

DETAIL 1

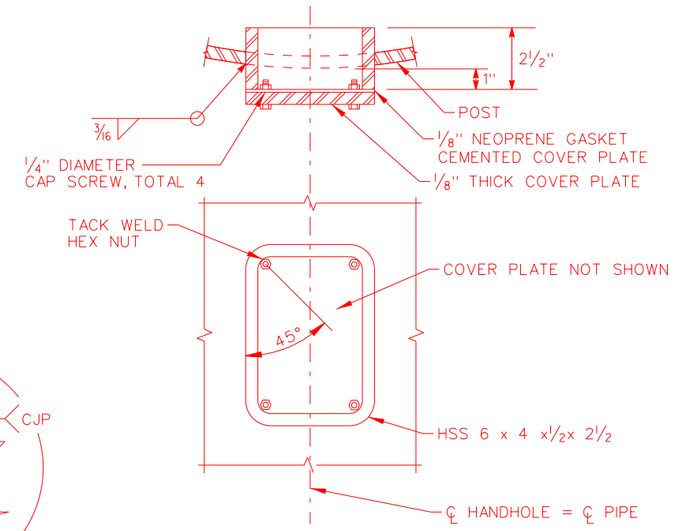

DETAIL 2
NTS

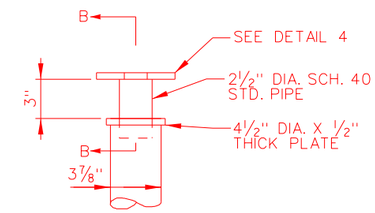

DETAIL 3
TYPICAL CCTV CAMERA MOUNT ASSEMBLY
(VARIES BY MANUFACTURER)
NTS

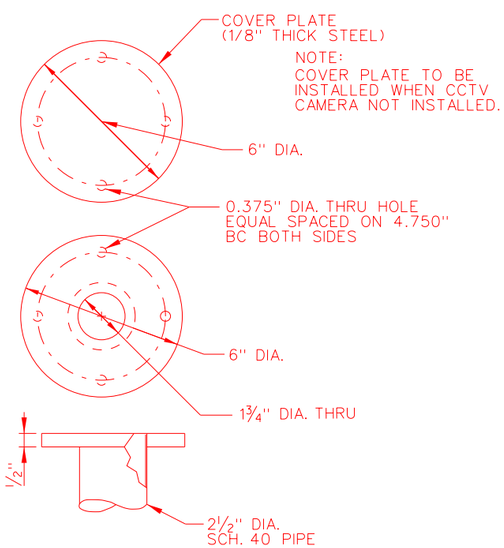

DETAIL 4
TYPICAL CCTV CAMERA MOUNT PLATE
(VARIES BY MANUFACTURER)
NTS

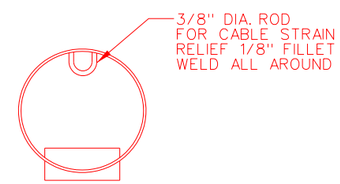

SECTION A-A
NTS

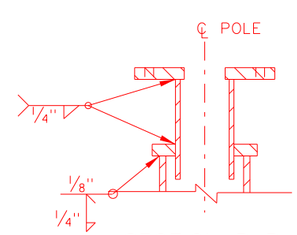

SECTION B-B
NTS

NOTES:

1. DEVICE MOUNT ASSEMBLIES TO BE INSTALLED AND MOUNTED PER MANUFACTURER'S SPECIFICATION AND RECOMMENDATIONS.
2. SEE PLAN SHEETS AND NETWORK DIAGRAMS FOR INSTALLATION LOCATIONS AND EQUIPMENT TO BE INSTALLED.
3. INSTALL STEEL RAIN TIGHT REMOVABLE CAP ON TOP OF POLE IF POLE TOP DEVICE IS NOT SPECIFIED IN PLANS.
4. SWEEPS FOR CONDUIT SHALL NOT BE LESS THAN MINIMUM BENDING RADIUS OF FIBER.

SHEET 2 OF 3

STATE OF NEVADA
DEPARTMENT OF TRANSPORTATION

30 FOOT ITS POLE

STATE	PROJECT NO.	COUNTY	SHEET NO.
NEVADA			

PRELIMINARY

SUBJECT TO REVISION
2/3/2015 9:08:58 AM

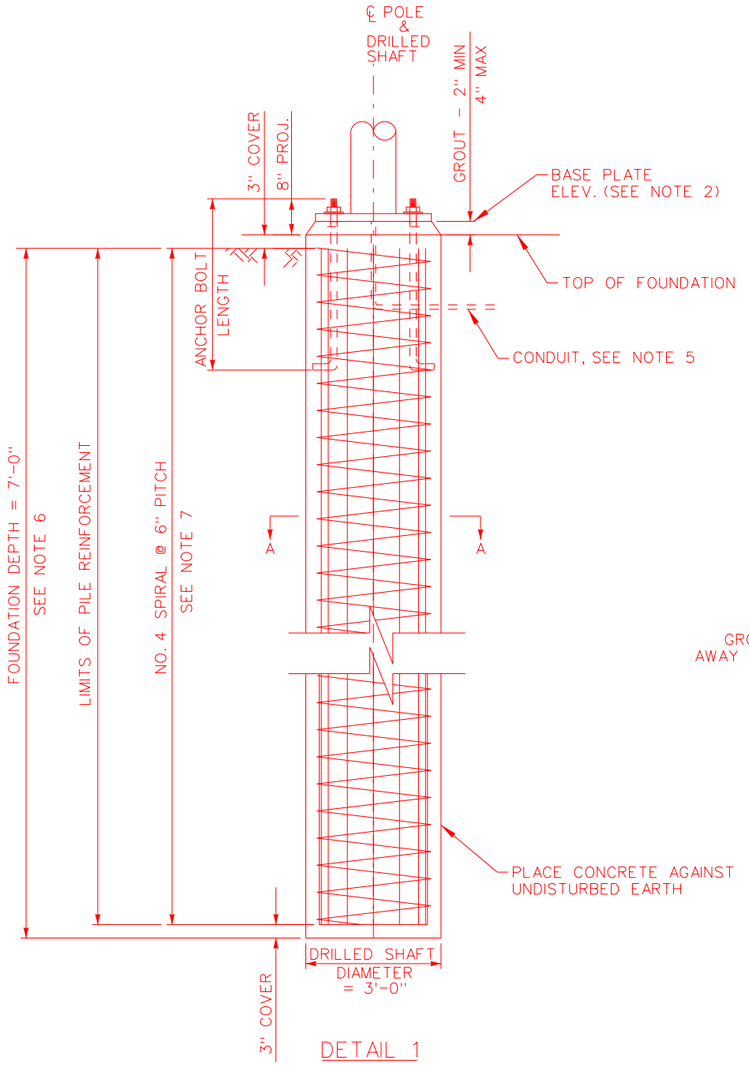

DETAIL 1

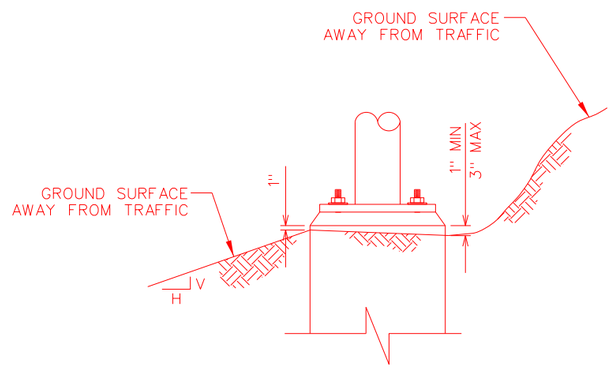

DETAIL 2

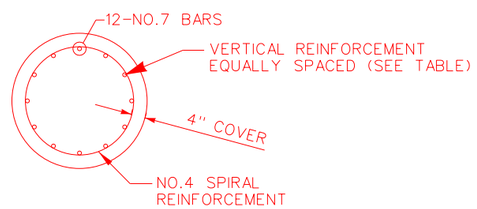

SECTION A-A

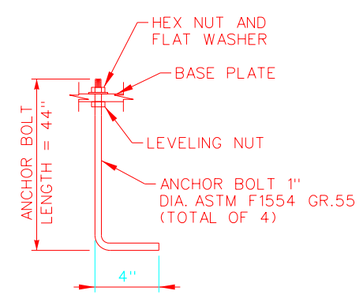

DETAIL 3

ANCHOR BOLT DETAIL
(SEE NOTE 8)

ITS POLE	ANCHOR BOLTS DIA.	ANCHOR BOLT LENGTH	VERTICAL REINFORCING STEEL	DRILLED SHAFT DIAMETER	FOUNDATION DEPTH
30'	1"	44"	12 – NO. 7	36"	7'

NOTES:

1. FOR ANCHOR BOLT LAYOUT, REFER TO POLE MANUFACTURER'S SPECIFICATIONS.
2. CONFIRM BASE PLATE ELEVATION WITH ENGINEER PRIOR TO POURING OF FOUNDATION.
3. DRILLED SHAFT SHALL BE CONSTRUCTED ACCORDING TO SECTION 623 OF THE STANDARD SPECIFICATIONS.
4. PILE SHALL BE FORMED 6" MIN. BELOW GROUND SURFACE. REMAINDER TO BE PLACED AGAINST UNDISTURBED MATERIAL.
5. FOR NUMBER AND SIZE OF CONDUIT IN FOUNDATION, SEE ELECTRICAL PLAN SHEETS, UNLESS NOTED OTHERWISE.
6. DEPTH OF FOUNDATION (DRILLED SHAFT) WILL BE MEASURED FROM THE LOWEST POINT ON FINISHED GRADE AND LENGTH OF PILE WILL CHANGE ACCORDINGLY.
7. TERMINATE NO. 4 SPIRAL REINFORCEMENT WITH 135 DEGREE HOOK AROUND MAIN VERTICAL REINFORCEMENT.
8. ALL ANCHOR BOLTS AND NUTS SHALL CONFORM TO THE SPECIFICATIONS ASTM DESIGNATION F1554 GR.55 AND SHALL BE FURNISHED WITH COMMERCIAL QUALITY WASHERS.
9. THREAD UPPER 8" OF ANCHOR BOLTS AND GALVANIZE ENTIRE BOLT IN ACCORDANCE WITH ASTM A153 (AASHTO M232).
10. BEFORE PLACING THE FOUNDATION, CONTACT THE NDOT GEOTECHNICAL ENGINEERING SECTION FOR FURTHER INVESTIGATION WHEN THE FOLLOWING SOIL CONDITIONS ARE ENCOUNTERED: (A) SOILS WITH HIGH ORGANIC CONTENT; (B) THE SITE CANNOT SUPPORT THE DRILL RIG; OR (C) FIRM BEDROCK IS ENCOUNTERED.
11. BONDING AND GROUNDING SHALL MEET THE NATIONAL ELECTRIC CODE AND NDOT STANDARDS. SEE POLE GROUNDING DETAIL ON NDOT STANDARD PLAN T-30.1.16.
12. STRUCTURAL BOLTS AND OTHER STEEL HARDWARE SHALL BE HOT DIPPED GALVANIZED IN ACCORDANCE WITH ASTM A153 (AASHTO M232).

SHEET 3 OF 3

STATE OF NEVADA
DEPARTMENT OF TRANSPORTATION

30 FOOT CCTV CAMERA ITS POLE FOUNDATION DETAILS

STATE	PROJECT NO.	COUNTY	SHEET NO.
NEVADA			

PRELIMINARY
SUBJECT TO REVISION
2/3/2015 9:09:34 AM

GENERAL NOTES:

1. DESIGN SPECIFICATIONS: AASHTO STANDARD SPECIFICATIONS FOR STRUCTURAL SUPPORTS FOR HIGHWAY SIGNS, LUMINAIRES, AND TRAFFIC SIGNALS, 5TH EDITION 2009 WITH 2010 INTERIM REVISIONS.

2. LOADING
   A. IMPORTANCE FACTORS (If & Ir): 1.0
   B. DRAG COEFFICIENT (C): 0.45 - 2.0 DEPENDING ON SHAPE OF MEMBER AND WIND VELOCITY
   C. MAXIMUM WIND LOAD: 23.4 psf * Cd * I
   D. NATURAL WIND GUSTS: 5.2 psf * Cd * I
   E. WIND SPEED: 90 MPH
   F. ICE LOAD: 3 psf

3. SERVICEABILITY
   MAXIMUM 1" DISPLACEMENT FOR 30MPH WIND SPEED.

4. STRUCTURAL STEEL
   A. POLE MATERIAL IS ASTM A36 STEEL.
   B. STEEL TUBING SHALL CONFORM TO ASTM A500, GRADE C.
   C. HOT DIP GALVANIZE STRUCTURAL STEEL AFTER FABRICATION IN ACCORDANCE WITH ASTM A123.
   D. HARDWARE SHALL BE GALVANIZED AS PER ASTM A153

5. MATERIAL REQUIREMENTS
   A. STRUCTURAL STEEL: Fy = 36 ksi
   B. DRILLED SHAFT: F'c= 4000 psi
   C. REINFORCING STEEL: ASTM A615 GRADE 60
   ALL BENDS AND HOOKS SHALL MEET THE REQUIREMENTS OF THE AASHTO LRFD BRIDGE DESIGN SPECIFICATIONS, 5TH EDITION 2010 ARTICLE 5.10. ALL BEND DIMENSIONS FOR REINFORCING STEEL SHALL BE OUT-TO-OUT OF BARS. ALL PLACEMENT DIMENSIONS FOR REINFORCING STEEL SHALL BE TO CENTER OF BARS UNLESS NOTED OTHERWISE.

6. BOLTED CONNECTIONS.
   A. ACCOMPLISH ALL STRUCTURAL HIGH STRENGTH BOLTING, EXCEPT ANCHOR BOLTS, USING AASHTO M164 BOLTS.
   B. USE A HARDENED FLAT WASHER BETWEEN THE NUT AND THE CONNECTED PART.
   C. USE HIGH STRENGTH BOLTS WITH DTI'S OR TENSION CONTROL INDICATORS INSTALLED PER SUBSECTION 506.03.07 OF THE STANDARD SPECIFICATIONS.
   D. FABRICATE ANCHOR BOLTS FROM MATERIAL CONFORMING TO ASTM F1554 GRADE 36.
   E. HOT-DIP GALVANIZE ALL STEEL PARTS IN ACCORDANCE WITH ASTM A153 (AASHTO M232), EXCEPT AS SHOWN FOR ONLY THE TOP 12" FOR ANCHOR BOLTS, AND AS SPECIFIED FOR HIGH STRENGTH BOLTING.
   F. HIGH STRENGTH BOLTS SHALL BE HOT-DIP GALVANIZED IN ACCORDANCE WITH ASTM A153, CLASS C, OR MECHANICALLY GALVANIZED IN ACCORDANCE WITH ASTM B695, CLASS 50. WASHERS, NUTS, AND BOLTS IN ANY ASSEMBLY SHALL BE GALVANIZED BY THE SAME PROCESS. DTI SHALL BE MECHANICALLY GALVANIZED IN ACCORDANCE WITH ASTM B695. LUBRICATE THREADS WITH A DYED LUBRICANT.

7. WELDED CONNECTIONS
   A. WELDS SHALL BE CONTINUOUS UNLESS OTHERWISE NOTED ON THE PLANS.
   B. WELD IN ACCORDANCE WITH SECTION 506 OF THE STANDARD SPECIFICATIONS.
   C. USE ONLY WELDERS QUALIFIED ACCORDING TO ANSI/AASHTO/AWS D1.1-2000, SECTION 4 FOR THE TYPE OF JOINT, ELECTRODE, POSITION OF THE JOINT, AND THE MATERIAL THICKNESS.
   D. USE ONLY PREQUALIFIED JOINTS.
   E. TEST ALL FULL PENETRATION GROOVE WELDS ULTRASONICALLY IN ACCORDANCE WITH SECTION 6, PART F OF ANSI/AASHTO/AWS D1.1-2000. ACCEPT OR REJECT EACH WELD DISCONTINUITY ON THE BASIS OF ITS INDICATION RATING AND ITS LENGTH IN ACCORDANCE WITH SECTION 9.3.
   F. HAVE ALL FILLET WELDS VISUALLY INSPECTED BY QUALIFIED PERSONNEL. ANY WELDS FOUND TO HAVE INCOMPLETE FUSION, OVERLAP OR CRACKS WILL BE REJECTED.

8. GROUTING
   A. SHIM BASE PLATES TO FINISH ELEVATION AND COMPLETELY FILL PLATE AREA WITH A HIGH STRENGTH, NON-FERROUS, NON-SHRINK GROUT.
   B. FORMULATE GROUT TO COMPLY WITH THE ASTM C1107.
   C. TAPER ALL FINISHED SURFACES AT 45 DEGREE +/-.

9. FOUNDATION: DRILLED SHAFT.

10. GROUND ALL STRUCTURES IN ACCORDANCE WITH APPLICABLE ELECTRICAL CODES.

11. DIMENSIONS SHALL NOT BE SCALED FROM DRAWINGS.

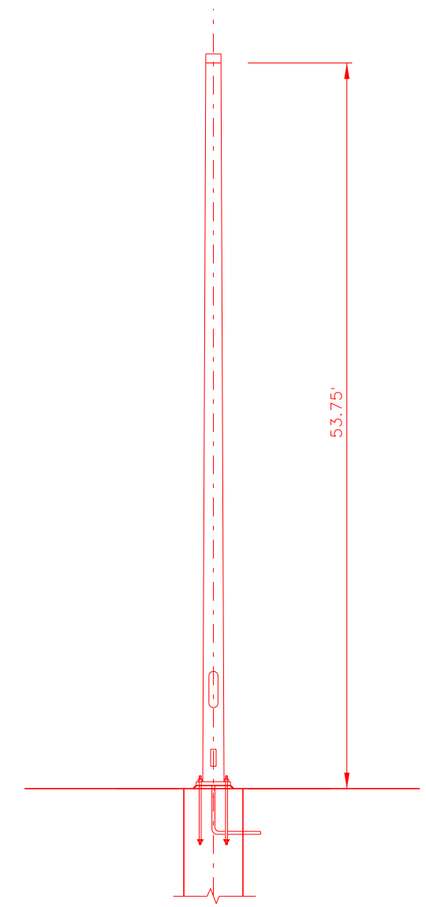

55 FOOT ITS POLE
NTS

SHEET 1 OF 4

STATE OF NEVADA
DEPARTMENT OF TRANSPORTATION

55 FOOT ITS POLE

STATE	PROJECT NO.	COUNTY	SHEET NO.
NEVADA			

PRELIMINARY

SUBJECT TO REVISION
2/3/2015 9:09:12 AM

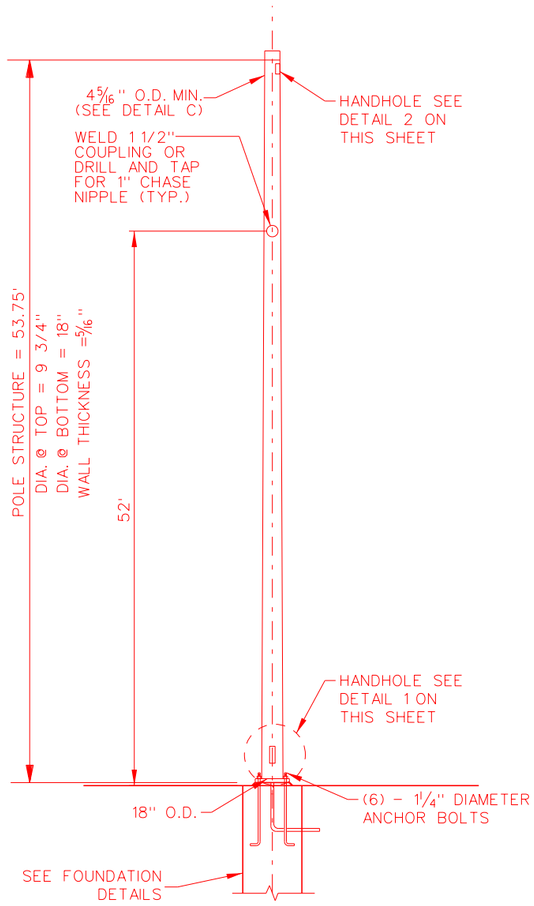

TYPICAL POLE ELEVATION
NTS
(ALL HEIGHTS ARE APPROXIMATE, ADJUST IN FIELD)

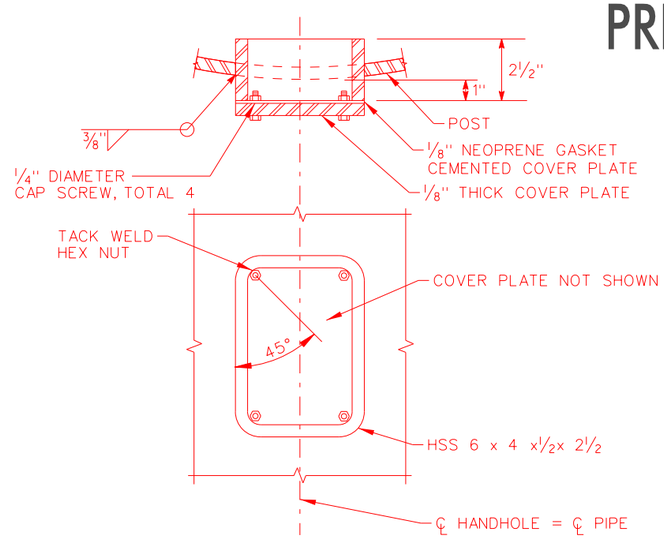

DETAIL 2
NTS

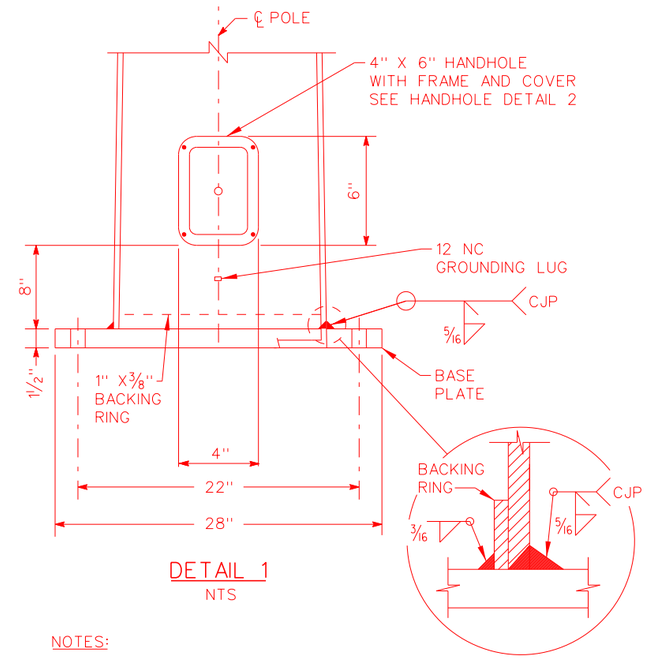

DETAIL 1
NTS

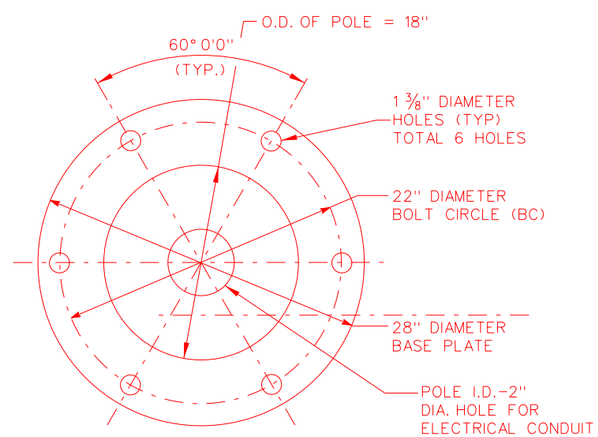

TYPICAL BASE PLATE PLAN
NTS

NOTES:

1. DEVICE MOUNT ASSEMBLIES TO BE INSTALLED AND MOUNTED PER MANUFACTURER'S SPECIFICATIONS AND RECOMMENDATIONS.
2. SEE PLAN SHEETS AND NETWORK DIAGRAMS FOR INSTALLATION LOCATIONS AND EQUIPMENT TO BE INSTALLED.
3. INSTALL STEEL RAIN TIGHT REMOVABLE CAP ON TOP OF POLE IF POLE TOP DEVICE IS NOT SPECIFIED IN PLANS.
4. SWEEPS FOR CONDUIT SHALL NOT BE LESS THAN MINIMUM BENDING RADIUS OF FIBER.
5. IF VID IS NOT SPECIFIED IN PLANS, DO NO INSTALL MAST ARM AND INSTALL STEEL RAIN TIGHT REMOVABLE PLATE OVER MAST ARM CONNECTION.

STATE OF NEVADA
DEPARTMENT OF TRANSPORTATION

55 FOOT ITS POLE

STATE	PROJECT NO.	COUNTY	SHEET NO.
NEVADA			

PRELIMINARY

SUBJECT TO REVISION
2/3/2015 9:09:20 AM

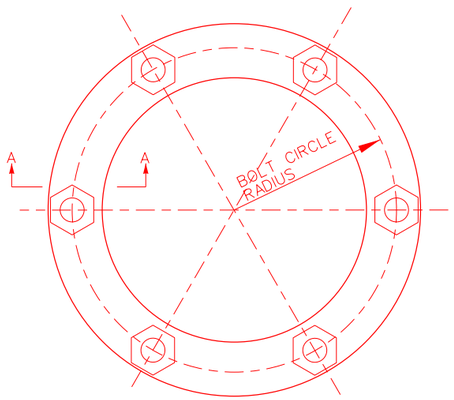

ANCHOR BOLT TEMPLATE

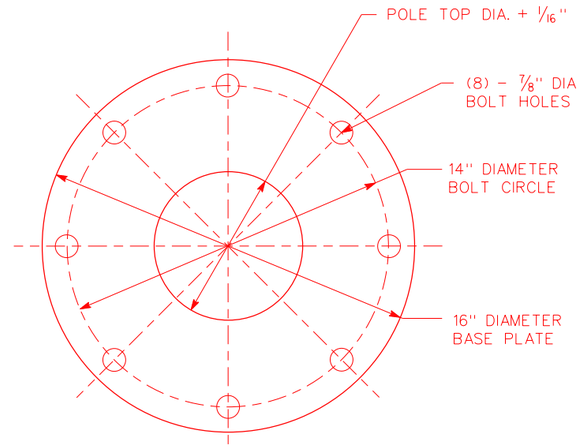

TOP VIEW

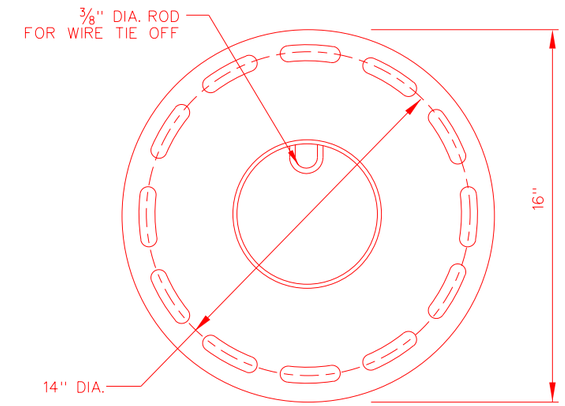

TOP VIEW

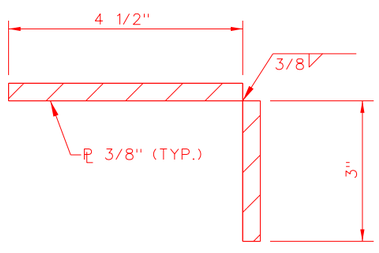

SECTION A-A

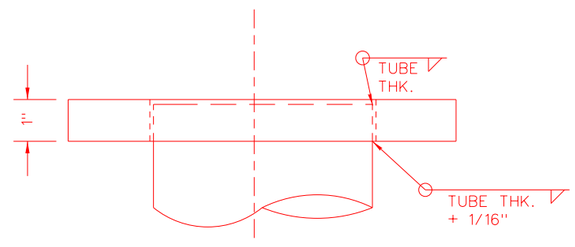

SIDE VIEW
TYPICAL CCTV POLE TOP MOUNT PLATE(FOR TENON MOUNT)
SEE DETAIL B

DETAIL A
NTS

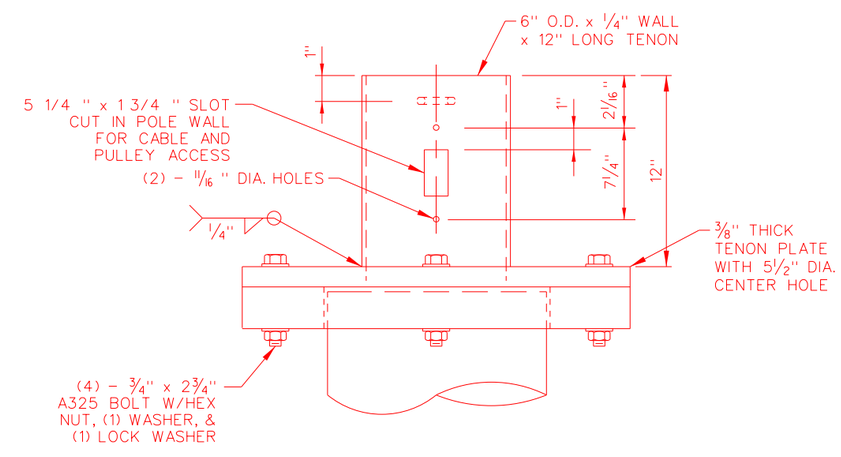

SIDE VIEW
TYPICAL TENON DETAIL
(VARIES BY MANUFACTURER)

DETAIL B
NTS

NOTE:
CONTRACTOR SHALL COORDINATE WITH CCTV LOWERING DEVICE VENDOR FOR LOWERING DEVICE MOUNTING REQUIREMENTS BEFORE CCTV POLE FABRICATION

SHEET 3 OF 4

STATE OF NEVADA
DEPARTMENT OF TRANSPORTATION

55 FOOT ITS POLE

STATE	PROJECT NO.	COUNTY	SHEET NO.
NEVADA			

PRELIMINARY

SUBJECT TO REVISION
2/3/2015 9:09:27 AM

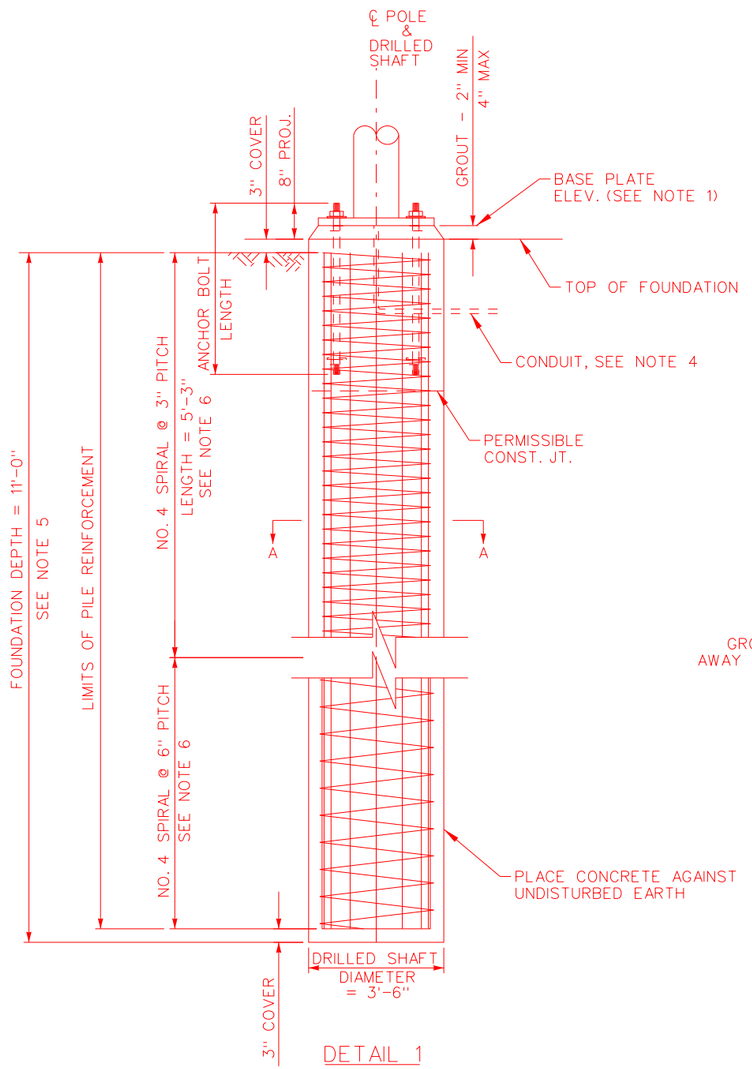

DETAIL 1

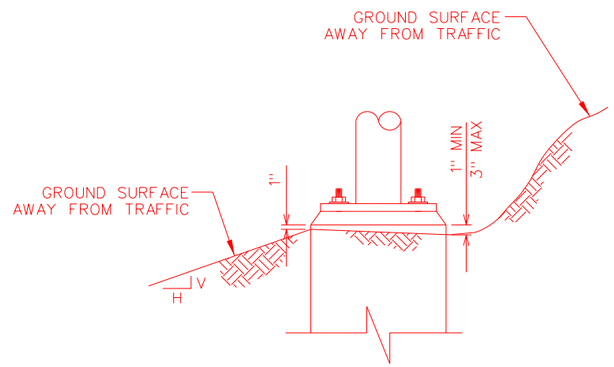

DETAIL 2

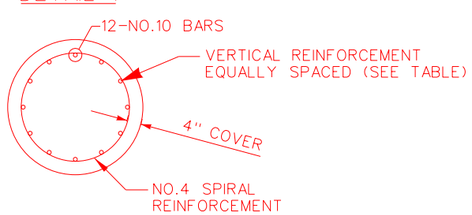

SECTION A-A

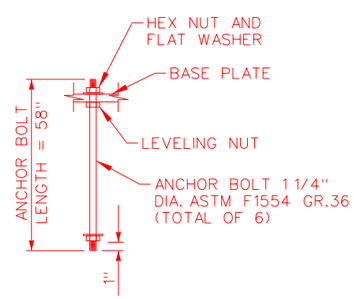

DETAIL 3

ANCHOR BOLT DETAIL
(SEE NOTE 8)

ITS POLE	ANCHOR BOLTS DIA.	ANCHOR BOLT LENGTH	VERTICAL REINFORCING STEEL	DRILLED SHAFT DIAMETER	FOUNDATION DEPTH
55'	1 1/4"	58"	12 - NO. 10	42"	11'

NOTES:

1. CONFIRM BASE PLATE ELEVATION WITH ENGINEER PRIOR TO POURING OF FOUNDATION.
2. DRILLED SHAFT SHALL BE CONSTRUCTED ACCORDING TO SECTION 509 OF THE STANDARD SPECIFICATIONS.
3. PILE SHALL BE FORMED 6" MIN. BELOW GROUND SURFACE. REMAINDER TO BE PLACED AGAINST UNDISTURBED MATERIAL.
4. FOR NUMBER AND SIZE OF CONDUIT IN FOUNDATION, SEE ELECTRICAL PLAN SHEETS, UNLESS NOTED OTHERWISE.
5. DEPTH OF FOUNDATION (DRILLED SHAFT) WILL BE MEASURED FROM THE LOWEST POINT ON FINISHED GRADE AND LENGTH OF PILE WILL CHANGE ACCORDINGLY.
6. TERMINATE NO. 4 SPIRAL REINFORCEMENT WITH 135 DEGREE HOOK AROUND MAIN VERTICAL REINFORCEMENT.
7. ALL ANCHOR BOLTS AND NUTS SHALL CONFORM TO THE SPECIFICATIONS ASTM DESIGNATION F1554 GR.55 AND SHALL BE FURNISHED WITH COMMERCIAL QUALITY WASHERS.
8. THREAD UPPER 8" OF ANCHOR BOLTS AND GALVANIZE ENTIRE BOLT IN ACCORDANCE WITH ASTM A153 (AASHTO M232).
9. BEFORE PLACING THE FOUNDATION, CONTACT THE NDOT GEOTECHNICAL ENGINEERING SECTION FOR FURTHER INVESTIGATION WHEN THE FOLLOWING SOIL CONDITIONS ARE ENCOUNTERED: (A) SOILS WITH HIGH ORGANIC CONTENT; (B) THE SITE CANNOT SUPPORT THE DRILL RIG; OR (C) FIRM BEDROCK IS ENCOUNTERED.
10. BONDING AND GROUNDING SHALL MEET THE NATIONAL ELECTRIC CODE AND NDOT STANDARDS. SEE POLE GROUNDING DETAIL ON NDOT STANDARD PLAN T-30.1.16.
11. STRUCTURAL BOLTS AND OTHER STEEL HARDWARE SHALL BE HOT DIPPED GALVANIZED IN ACCORDANCE WITH ASTM A153 (AASHTO M232).

STATE OF NEVADA
DEPARTMENT OF TRANSPORTATION

55 FOOT ITS POLE

STATE	PROJECT NO.	COUNTY	SHEET NO.
NEVADA			

GENERAL NOTES:

1. DESIGN SPECIFICATIONS: AASHTO STANDARD SPECIFICATIONS FOR STRUCTURAL SUPPORTS FOR HIGHWAY SIGNS, LUMINAIRES, AND TRAFFIC SIGNALS, 5TH EDITION 2009 WITH 2010 INTERIM REVISIONS.

2. LOADING
   - A. IMPORTANCE FACTORS (If & Ir): 1.0
   - B. DRAG COEFFICIENT (C): 0.45 – 2.0 DEPENDING ON SHAPE OF MEMBER AND WIND VELOCITY
   - C. MAXIMUM WIND LOAD: 23.4 psf * Cd * I
   - D. NATURAL WIND GUSTS: 5.2 psf * Cd * I
   - E. WIND SPEED: 90 MPH
   - F. ICE LOAD: 3 psf
   - G. FATIGUE CATEGORY: I

3. SERVICEABILITY
   MAXIMUM 1" DISPLACEMENT FOR 30MPH WIND SPEED.

4. STRUCTURAL STEEL
   - A. POLE MATERIAL IS ASTM A572 GRADE 50 STEEL.
   - B. STEEL TUBING SHALL CONFORM TO ASTM A500, GRADE C.
   - C. HOT DIP GALVANIZE STRUCTURAL STEEL AFTER FABRICATION IN ACCORDANCE WITH ASTM A123.
   - D. HARDWARE SHALL BE GALVANIZED AS PER ASTM A153

5. MATERIAL REQUIREMENTS
   - A. STRUCTURAL STEEL: Fy = 50 ksi
   - B. DRILLED SHAFT: F'c= 4000 psi
   - C. REINFORCING STEEL: ASTM A615 GRADE 60
     ALL BENDS AND HOOKS SHALL MEET THE REQUIREMENTS OF THE AASHTO LRFD BRIDGE DESIGN SPECIFICATIONS, 5TH EDITION 2010 ARTICLE 5.10. ALL BEND DIMENSIONS FOR REINFORCING STEEL SHALL BE OUT-TO-OUT OF BARS. ALL PLACEMENT DIMENSIONS FOR REINFORCING STEEL SHALL BE TO CENTER OF BARS UNLESS NOTED OTHERWISE.

6. BOLTED CONNECTIONS.
   - A. ACCOMPLISH ALL STRUCTURAL HIGH STRENGTH BOLTING, EXCEPT ANCHOR BOLTS, USING AASHTO M164 BOLTS.
   - B. USE A HARDENED FLAT WASHER BETWEEN THE NUT AND THE CONNECTED PART.
   - C. USE HIGH STRENGTH BOLTS WITH DTI'S OR TENSION CONTROL INDICATORS INSTALLED PER SUBSECTION 506.03.07 OF THE STANDARD SPECIFICATIONS.
   - D. FABRICATE ANCHOR BOLTS FROM MATERIAL CONFORMING TO ASTM F1554 GRADE 55.
   - E. HOT-DIP GALVANIZE ALL STEEL PARTS IN ACCORDANCE WITH ASTM A153 (AASHTO M232), EXCEPT AS SPECIFIED FOR HIGH STRENGTH BOLTING.
   - F. HIGH STRENGTH BOLTS SHALL BE HOT-DIP GALVANIZED IN ACCORDANCE WITH ASTM A153, CLASS C, OR MECHANICALLY GALVANIZED IN ACCORDANCE WITH ASTM B695, CLASS 50. WASHERS, NUTS, AND BOLTS IN ANY ASSEMBLY SHALL BE GALVANIZED BY THE SAME PROCESS. DTI SHALL BE MECHANICALLY GALVANIZED IN ACCORDANCE WITH ASTM B695. LUBRICATE THREADS WITH A DYED LUBRICANT.

7. WELDED CONNECTIONS
   - A. WELDS SHALL BE CONTINUOUS UNLESS OTHERWISE NOTED ON THE PLANS.
   - B. WELD IN ACCORDANCE WITH SECTION 506 OF THE STANDARD SPECIFICATIONS.
   - C. USE ONLY WELDERS QUALIFIED ACCORDING TO ANSI/AASHTO/AWS D1.1-2000, SECTION 4 FOR THE TYPE OF JOINT, ELECTRODE, POSITION OF THE JOINT, AND THE MATERIAL THICKNESS.
   - D. USE ONLY PREQUALIFIED JOINTS.
   - E. TEST ALL FULL PENETRATION GROOVE WELDS ULTRASONICALLY IN ACCORDANCE WITH SECTION 6, PART F OF ANSI/AASHTO/AWS D1.1-2000. ACCEPT OR REJECT EACH WELD DISCONTINUITY ON THE BASIS OF ITS INDICATION RATING AND ITS LENGTH IN ACCORDANCE WITH SECTION 9.3.
   - F. HAVE ALL FILLET WELDS VISUALLY INSPECTED BY QUALIFIED PERSONNEL. ANY WELDS FOUND TO HAVE INCOMPLETE FUSION, OVERLAP OR CRACKS WILL BE REJECTED.

8. GROUTING
   - A. SHIM BASE PLATES TO FINISH ELEVATION AND COMPLETELY FILL PLATE AREA WITH A HIGH STRENGTH, NON-FERROUS, NON-SHRINK GROUT.
   - B. FORMULATE GROUT TO COMPLY WITH THE ASTM C1107.
   - C. TAPER ALL FINISHED SURFACES AT 45 DEGREE +/-.

9. FOUNDATION: DRILLED SHAFT.

10. GROUND ALL STRUCTURES IN ACCORDANCE WITH APPLICABLE ELECTRICAL CODES.

11. DIMENSIONS SHALL NOT BE SCALED FROM DRAWINGS.

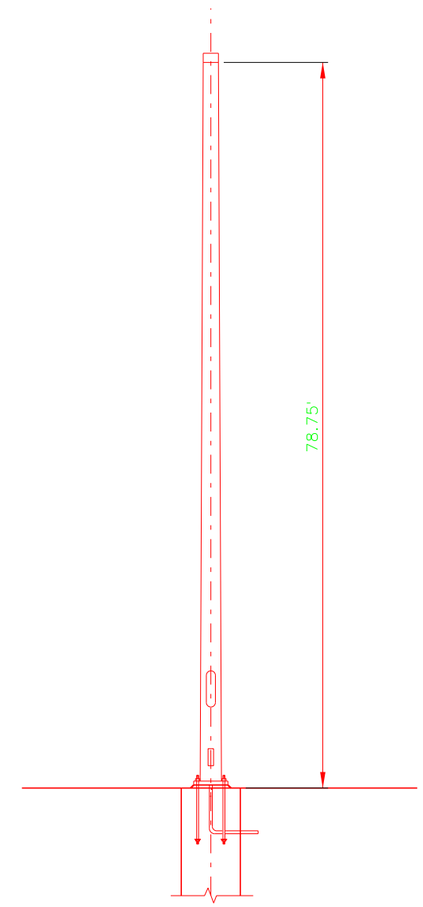

80 FOOT ITS POLE
NTS

SHEET 1 OF 4

STATE OF NEVADA
DEPARTMENT OF TRANSPORTATION

80 FOOT ITS POLE

STATE	PROJECT NO.	COUNTY	SHEET NO.
NEVADA			

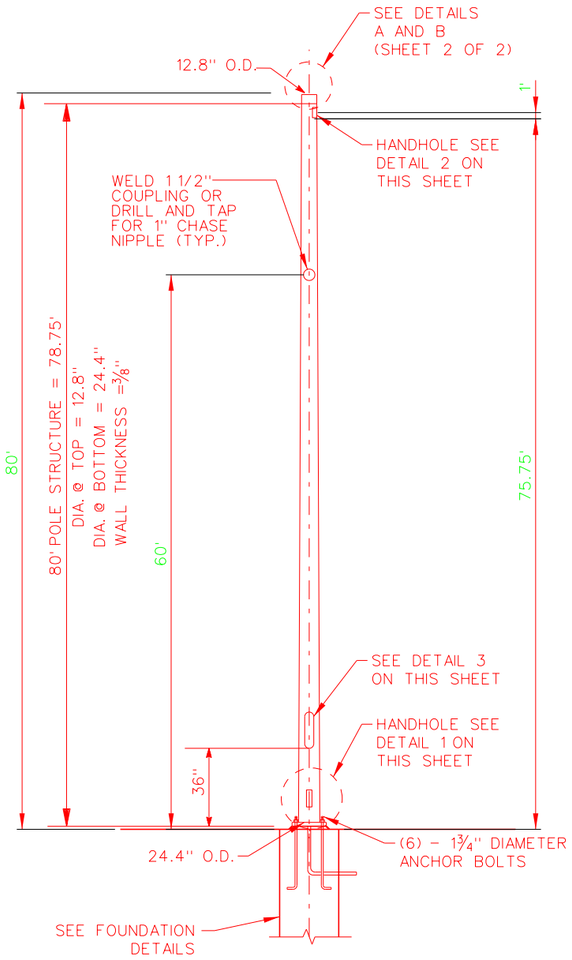

TYPICAL POLE ELEVATION

NTS

(ALL HEIGHTS ARE APPROXIMATE, ADJUST IN FIELD)

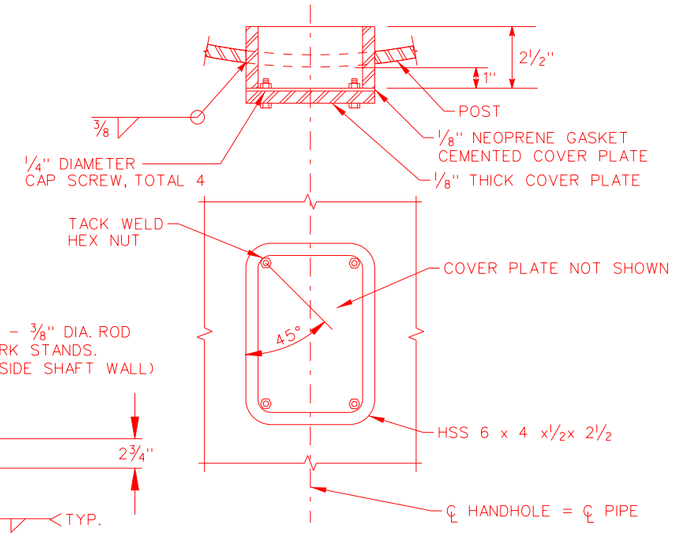

DETAIL 2

NTS

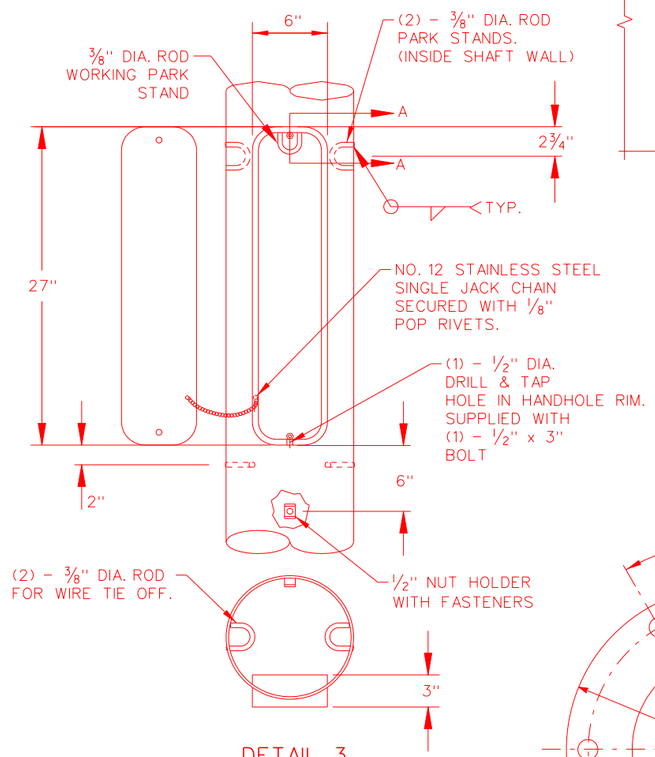

DETAIL 3

NTS

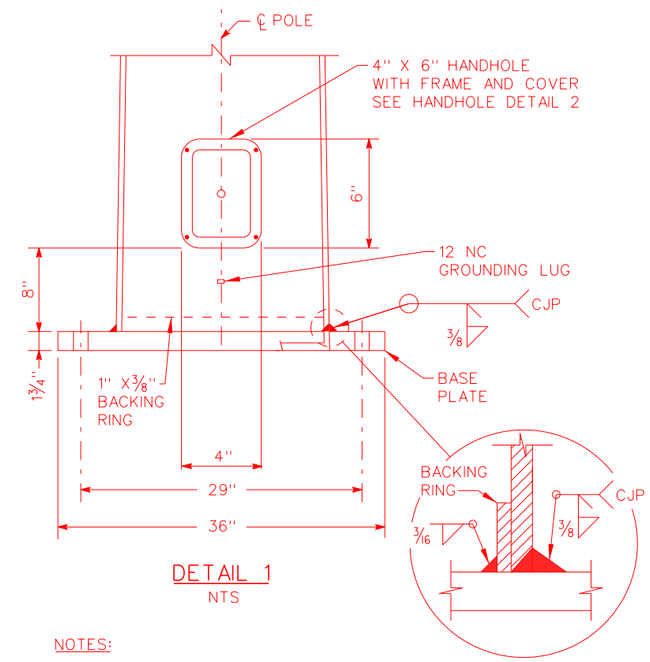

DETAIL 1

NTS

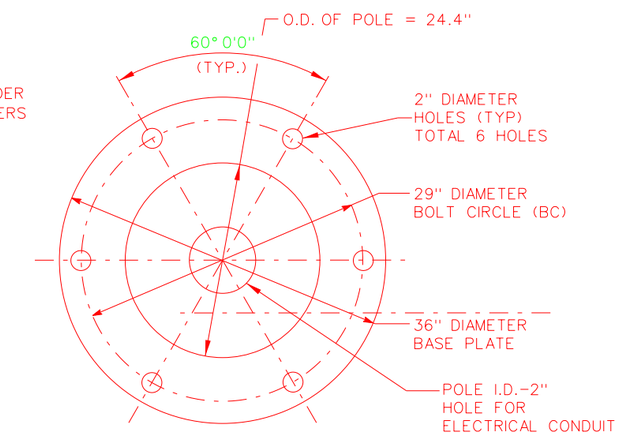

TYPICAL BASE PLATE PLAN

NTS

(T = SHAFT WALL THICKNESS)

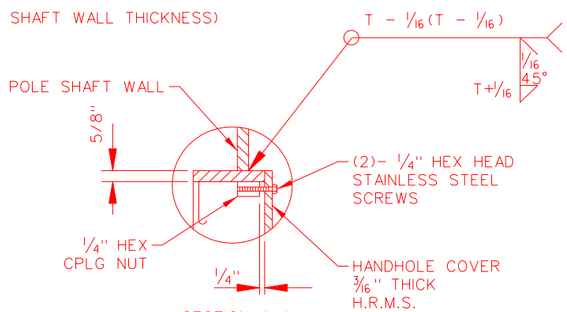

SECTION A-A

NOTES:

1. DEVICE MOUNT ASSEMBLIES TO BE INSTALLED AND MOUNTED PER MANUFACTURER'S SPECIFICATION AND RECOMMENDATIONS.
2. SEE PLAN SHEETS AND NETWORK DIAGRAMS FOR INSTALLATION LOCATIONS AND EQUIPMENT TO BE INSTALLED.
3. INSTALL STEEL RAIN TIGHT REMOVABLE CAP ON TOP OF POLE IF POLE TOP DEVICE IS NOT SPECIFIED IN PLANS.
4. SWEEPS FOR CONDUIT SHALL NOT BE LESS THAN MINIMUM BENDING RADIUS OF FIBER.

SHEET 2 OF 4

STATE OF NEVADA
DEPARTMENT OF TRANSPORTATION

80 FOOT ITS POLE

STATE	PROJECT NO.	COUNTY	SHEET NO.
NEVADA			

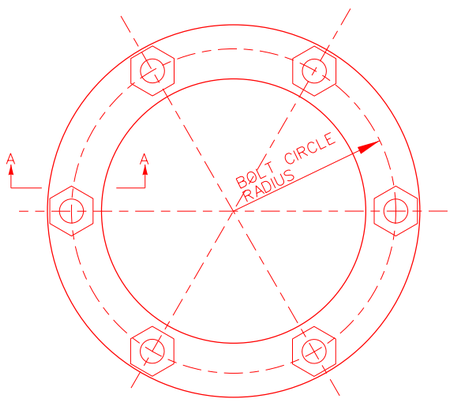

ANCHOR BOLT TEMPLATE

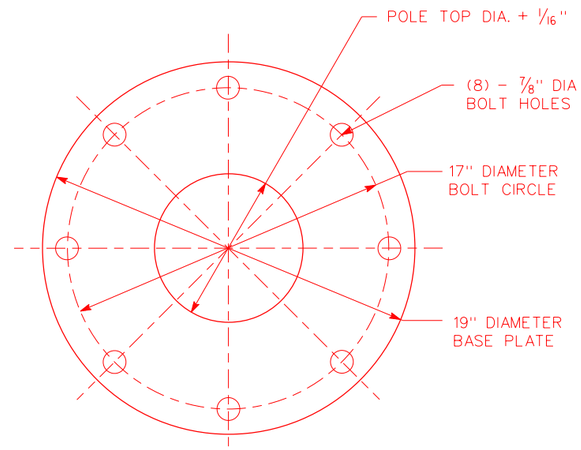

TOP VIEW

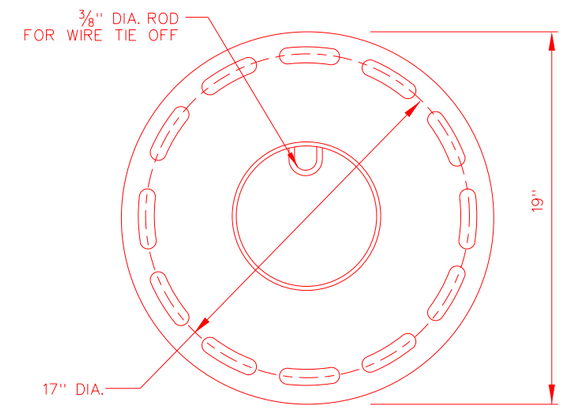

TOP VIEW

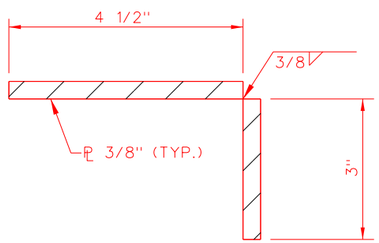

SECTION A-A

NOTE:
CONTRACTOR SHALL COORDINATE WITH CCTV LOWERING DEVICE VENDOR FOR LOWERING DEVICE MOUNTING REQUIREMENTS BEFORE CCTV POLE FABRICATION

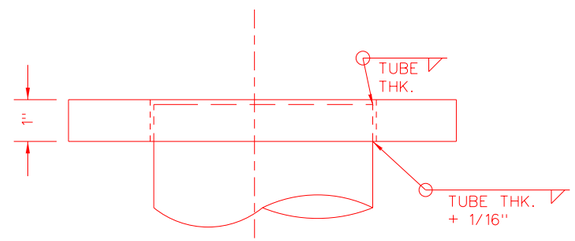

SIDE VIEW

TYPICAL CCTV POLE TOP MOUNT PLATE(FOR TENON MOUNT)
SEE DETAIL B

DETAIL A

NTS

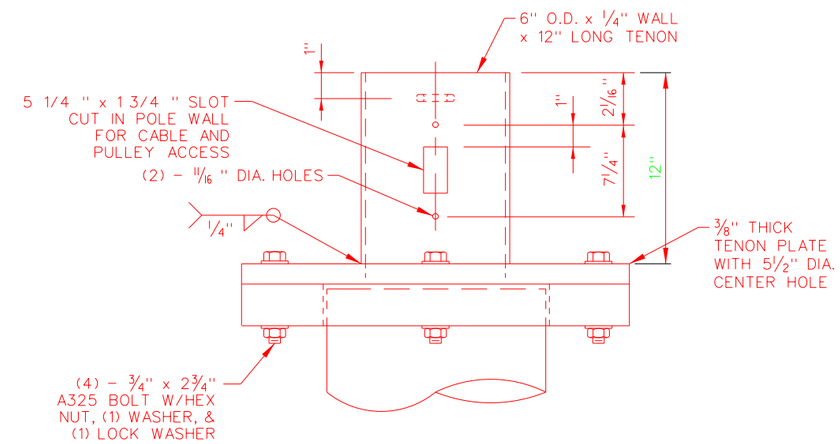

SIDE VIEW

TYPICAL TENON DETAIL
(VARIES BY MANUFACTURER)

DETAIL B

NTS

SHEET 3 OF 4

STATE OF NEVADA
DEPARTMENT OF TRANSPORTATION

80 FOOT ITS POLE

STATE	PROJECT NO.	COUNTY	SHEET NO.
NEVADA			

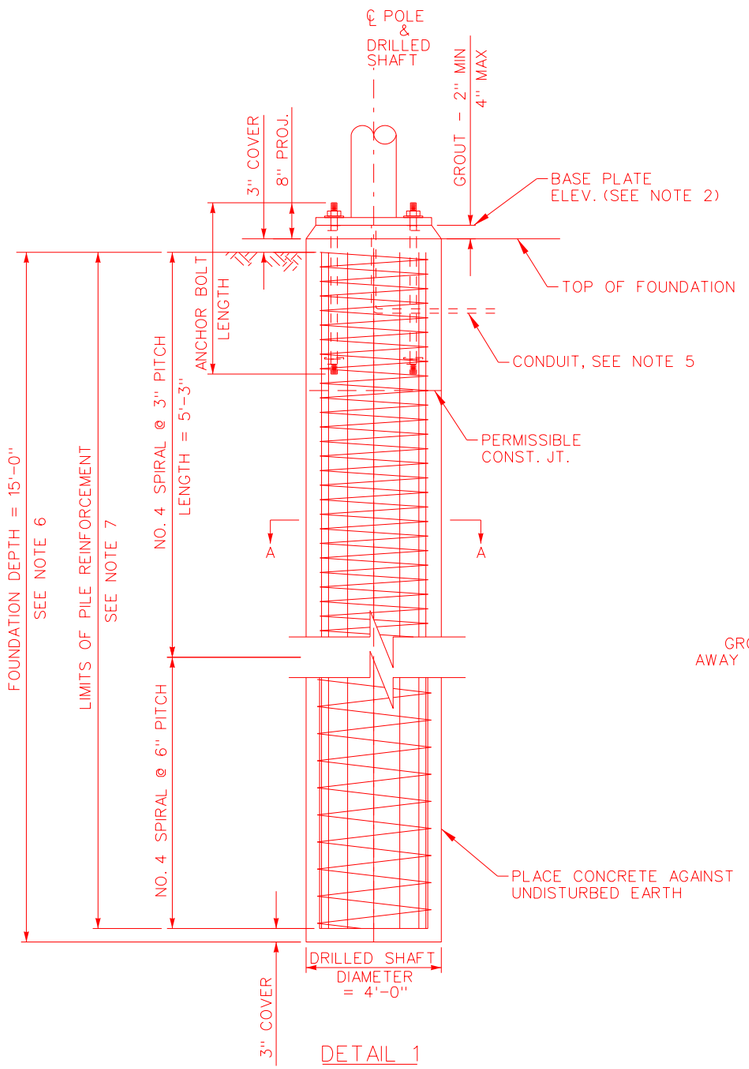

DETAIL 1

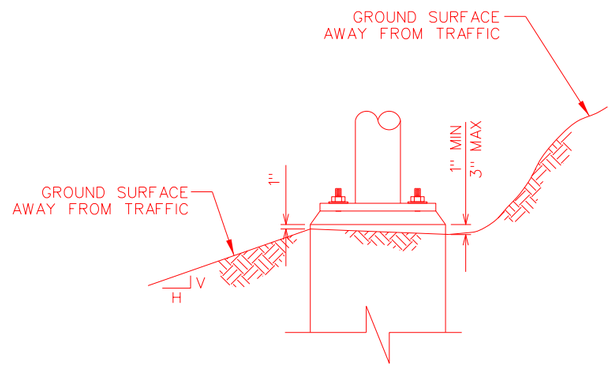

DETAIL 2

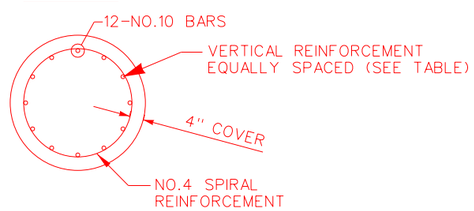

SECTION A-A

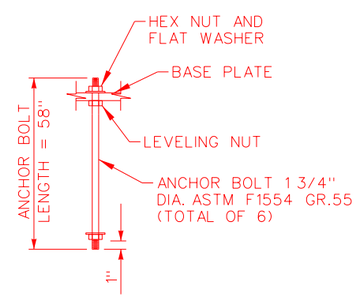

DETAIL 3

ANCHOR BOLT DETAIL (SEE NOTE 8)

ITS POLE	ANCHOR BOLTS DIA.	ANCHOR BOLT LENGTH	VERTICAL REINFORCING STEEL	DRILLED SHAFT DIAMETER	FOUNDATION DEPTH
80'	1 3/4"	58"	12 - NO. 10	48"	16'

NOTES:

1. FOR ANCHOR BOLT LAYOUT, REFER TO POLE MANUFACTURER'S SPECIFICATIONS.
2. CONFIRM BASE PLATE ELEVATION WITH ENGINEER PRIOR TO POURING OF FOUNDATION.
3. DRILLED SHAFT SHALL BE CONSTRUCTED ACCORDING TO SECTION 509 OF THE STANDARD SPECIFICATIONS.
4. PILE SHALL BE FORMED 6" MIN. BELOW GROUND SURFACE. REMAINDER TO BE PLACED AGAINST UNDISTURBED MATERIAL.
5. FOR NUMBER AND SIZE OF CONDUIT IN FOUNDATION, SEE ELECTRICAL PLAN SHEETS, UNLESS NOTED OTHERWISE.
6. DEPTH OF FOUNDATION (DRILLED SHAFT) WILL BE MEASURED FROM THE LOWEST POINT ON FINISHED GRADE AND LENGTH OF PILE WILL CHANGE ACCORDINGLY.
7. TERMINATE NO. 4 SPIRAL REINFORCEMENT WITH 135 DEGREE HOOK AROUND MAIN VERTICAL REINFORCEMENT.
8. ALL ANCHOR BOLTS AND NUTS SHALL CONFORM TO THE SPECIFICATIONS ASTM DESIGNATION F1554 GR.55 AND SHALL BE FURNISHED WITH COMMERCIAL QUALITY WASHERS.
9. THREAD UPPER 8" OF ANCHOR BOLTS AND GALVANIZE ENTIRE BOLT IN ACCORDANCE WITH ASTM A153 (AASHTO M232).
10. BEFORE PLACING THE FOUNDATION, CONTACT THE NDOT GEOTECHNICAL ENGINEERING SECTION FOR FURTHER INVESTIGATION WHEN THE FOLLOWING SOIL CONDITIONS ARE ENCOUNTERED: (A) SOILS WITH HIGH ORGANIC CONTENT; (B) THE SITE CANNOT SUPPORT THE DRILL RIG; OR (C) FIRM BEDROCK IS ENCOUNTERED.
11. BONDING AND GROUNDING SHALL MEET THE NATIONAL ELECTRIC CODE AND NDOT STANDARDS. SEE POLE GROUNDING DETAIL ON NDOT STANDARD PLAN T-30.1.16.
12. STRUCTURAL BOLTS AND OTHER STEEL HARDWARE SHALL BE HOT DIPPED GALVANIZED IN ACCORDANCE WITH ASTM A153 (AASHTO M232).

SHEET 4 OF 4

STATE OF NEVADA
DEPARTMENT OF TRANSPORTATION

80 FOOT ITS POLE

STATE	PROJECT NO.	COUNTY	SHEET NO.
NEVADA			

PRELIMINARY

SUBJECT TO REVISION

2/3/2015 9:10:33 AM

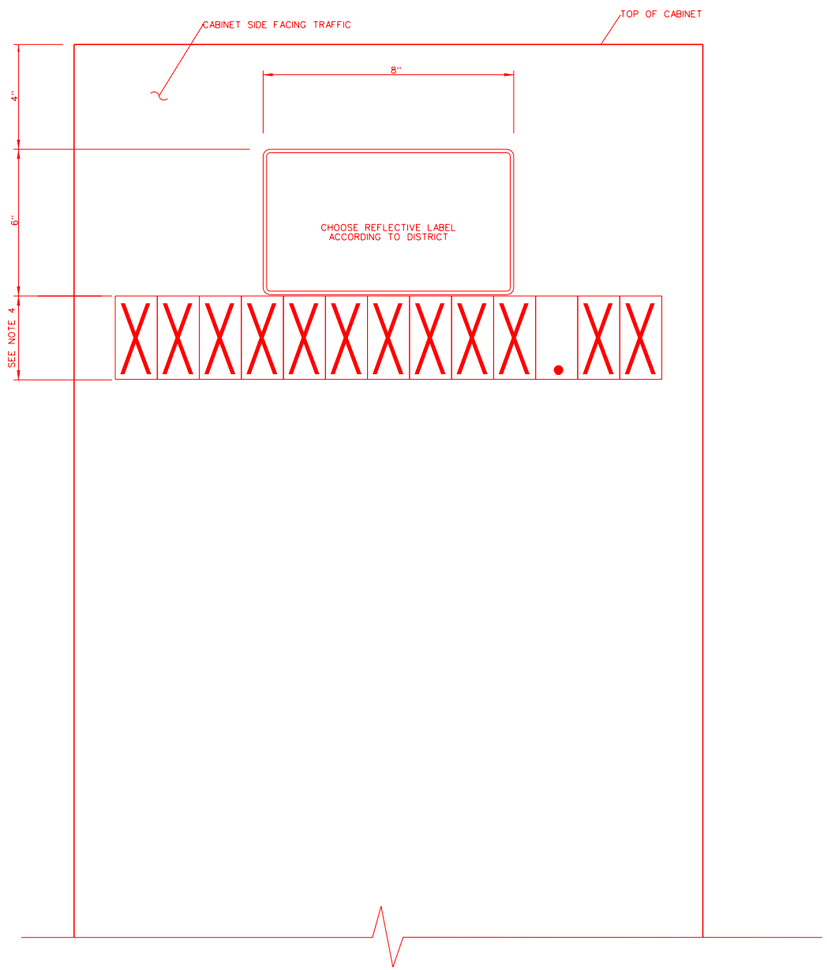

CABINET IDENTIFICATION CODE DETAIL

NTS

NOTES:

1. ALL CABINETS SHALL HAVE A THIRTEEN-DIGIT IDENTIFICATION CODE. IDENTIFICATION PLATE AND IDENTIFICATION PLATE INSTALLATION ARE INCIDENTAL TO CABINET INSTALLATION.
2. SEE PLAN SHEETS FOR CABINET IDENTIFICATION CODE. LETTERS AND NUMBERS SHALL BE PLACED IN SUCH A MANNER THAT THE ENTIRE IDENTIFICATION CODE IS CENTERED HORIZONTALLY ON THE SIDE OF THE CABINET FACING TRAFFIC.
3. INSTALL ADHESIVE BACKED NDOT OR FAST LABEL CENTERED HORIZONTALLY ABOVE CABINET IDENTIFICATION CODE. LABEL PROVIDED TO CONTRACTOR BY NDOT OR FAST.
4. ADHESIVE BACKED BLACK LETTERS WITH WHITE REFLECTIVE BACKGROUND FHWA SERIES C LETTERS CENTERED ON CABINET SIDE FACING TRAFFIC.
   - 2" LETTERS FOR DETECTORS, CCTV AND RAMP METER CABINETS
   - 1 1/2" LETTERS FOR POLE MOUNTED DMS AND TRAILBLAZER CABINETS

DISTRICT I

FAST
FREEWAY & ARTERIAL SYSTEM OF TRANSPORTATION
432-5300

DISTRICT II

NEVADA DOT
775-834-8488

DISTRICT III

NEVADA DOT
775-777-2700

DEVICE TYPE — ROUTE — DIRECTION — MILEPOST

DMS 015 N 000.00

EXAMPLE:

POSSIBLE DEVICE TYPES

DMS = Dynamic Message Sign
CTV = Closed Circuit Television
DET = Detector station (regardless of type of detection)
HAR = Highway Advisory Radio
CAB = Controller Cabinet (any type of Cabinet)
RWS = Road Weather Information System
RMP = Ramp Meter
SVS = Service drop location (Metered Service)

Possible Routes
015 = Interstate 15
215 = Interstate 215
515 = Interstate 515 (US 95 in some areas)
095 = US 95 (in most areas, not in area with I-515 designation)
587 = State Routes

Possible Directions
N = Northbound Roadway
S = Southbound Roadway
E = Eastbound Roadway
W = Westbound Roadway

Possible Milepost
Mileposts should be calculated to the nearest Hundreth of a mile.
Use 5 digits with decimal point.
Example
123.45 = milepost 123.45

Exception to the above address system
Devices not on a Freeway, highway, state route
1) Use actual street address (RWS123FIRSTST) limited to 10 characters
2) Use intersection names (RWSTROPRLVB) limited to 10 characters

STATE OF NEVADA
DEPARTMENT OF TRANSPORTATION

ITS CABINET LABELING

STATE	PROJECT NO.	COUNTY	SHEET NO.
NEVADA			

PRELIMINARY

SUBJECT TO REVISION
2/3/2015 9:11:48 AM

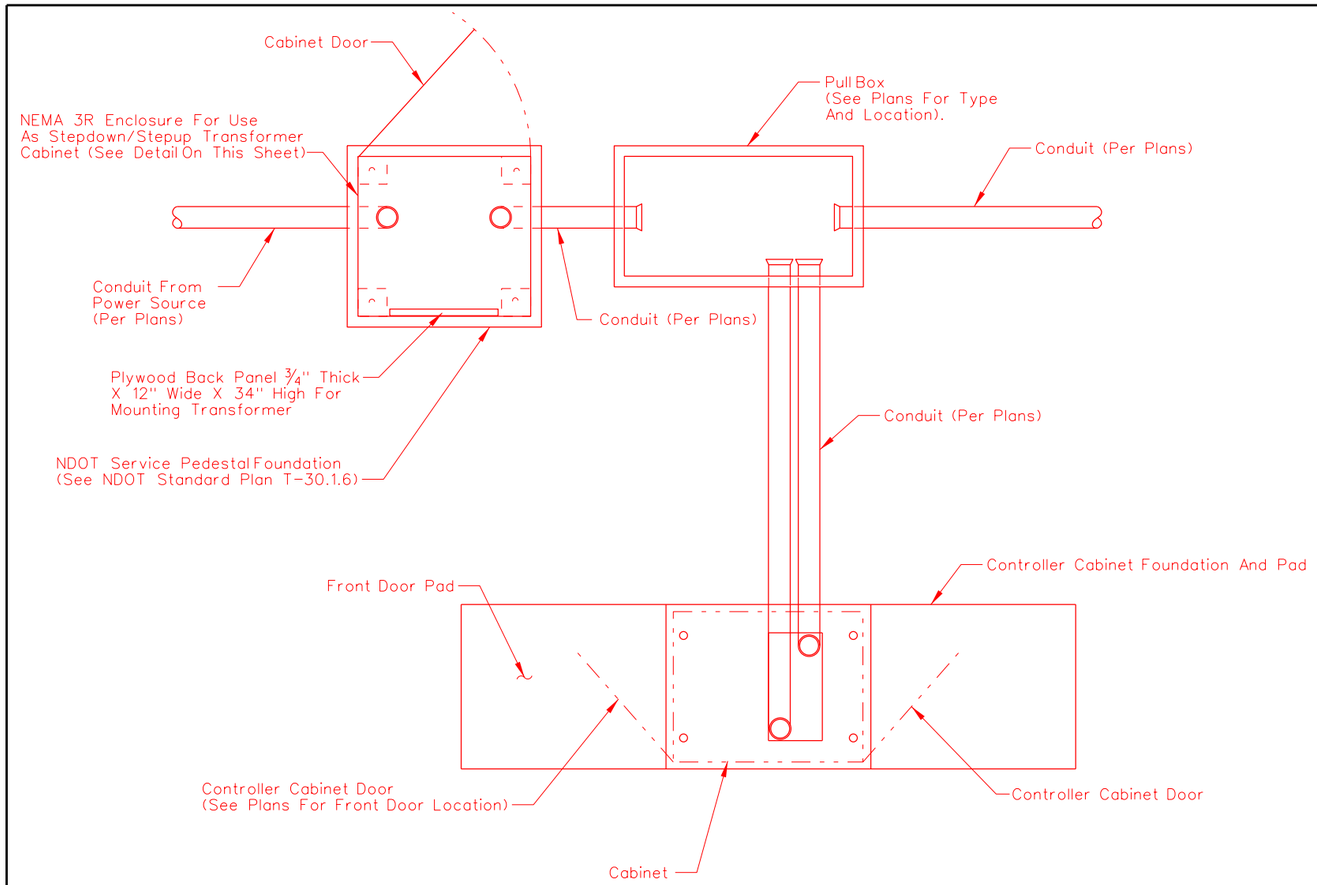

TYPICAL POWER CONDUIT CONFIGURATION DETAIL
FOR TRANSFORMER CABINET INSTALLATION
NTS

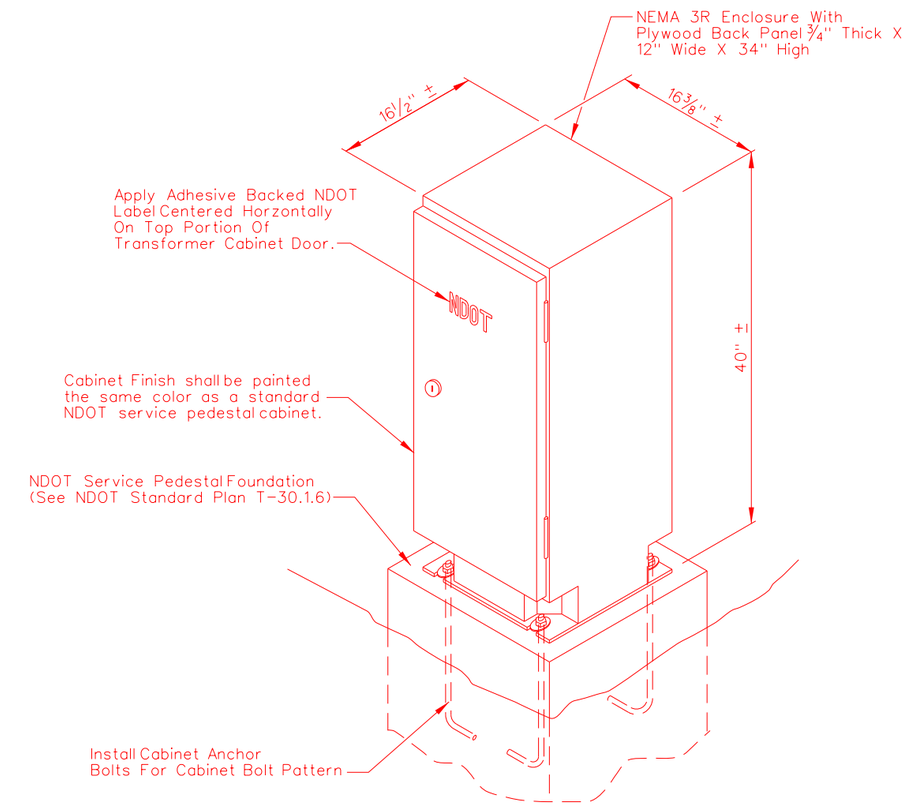

TYPICAL TRANSFORMER CABINET DETAIL
ISOMETRIC VIEW
NTS

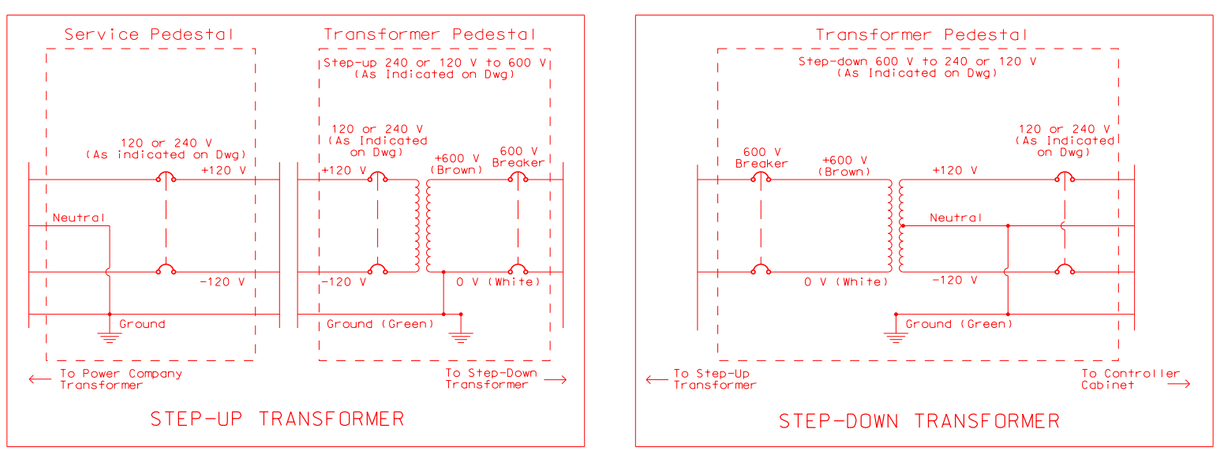

TRANSFORMER WIRING DETAILS

NOTES:

1. SEE PLANS FOR ADDITIONAL CONDUITS NOT RELATED TO TRANSFORMER SYSTEM.

STATE OF NEVADA
DEPARTMENT OF TRANSPORTATION

TYPICAL TRANSFORMER CABINET AND FOUNDATION

STATE	PROJECT NO.	COUNTY	SHEET NO.
NEVADA			

PRELIMINARY

SUBJECT TO REVISION
2/3/2015 9:07:42 AM

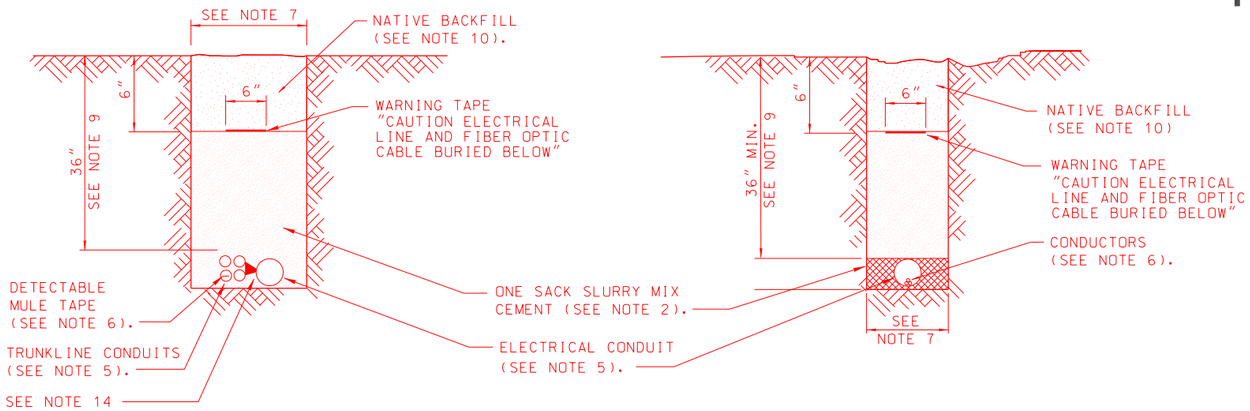

TYPICAL UNPAVED TRENCHES
NTS

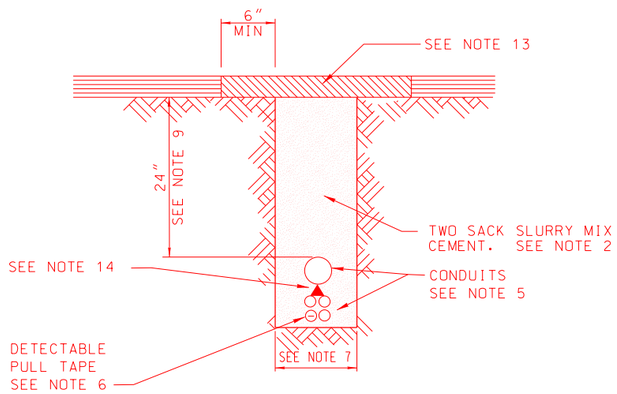

TYPICAL PAVED TRENCHES
SEE NDOT STANDARD T-30.1.2.1
NTS

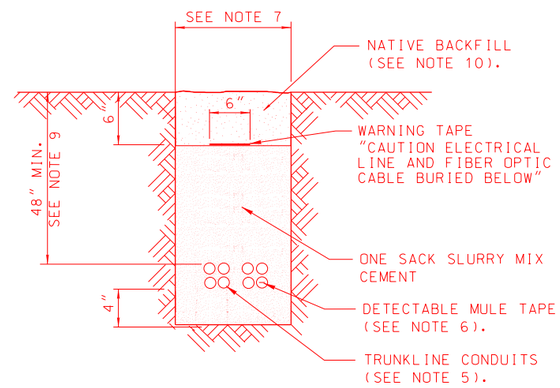

TYPICAL UNPAVED FAST CONDUIT TRENCH
NTS

FIBER OPTIC CONDUIT MARKER STICKER
NTS

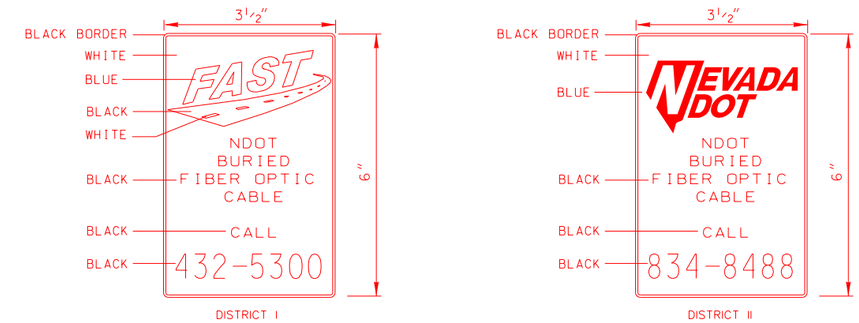

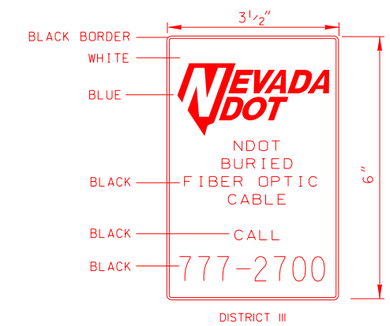

FIBER OPTIC CONDUIT MARKERS:

NDOT APPROVED FIBER OPTIC MARKERS SHALL BE INSTALLED ALONG FIBER OPTIC CONDUIT RUNS AT:
- EACH SIDE OF ROAD CROSSINGS
- CONDUIT TURN POINTS
- AS NEEDED TO SEE FROM ONE MARKER TO ANOTHER OR AT 500 FEET SPACING
- AT BURIED PULL BOX LOCATIONS

REFLECTIVE SHEETING FIBER OPTIC MARKER STICKERS SHALL BE INSTALLED ON FLEXIBLE GUIDE MARKERS. FLEXIBLE GUIDE MARKERS SHALL BE APPROXIMATELY 4in. WIDE AND 66in. IN HEIGHT, WITH A 18in. INSTALLATION DEPTH. EACH MARKER SHALL BE ORANGE IN COLOR AND HAVE 3in. X 12in. REFLECTIVE SHEETING AT THE TOP OF EACH SIDE OF THE MARKER. REFLECTIVE SHEETING SHALL MEET NDOT SECTION 716 REQUIREMENTS
EACH MARKER AND STICKER SHALL BE PROVIDED AND INSTALLED BY THE CONTRACTOR.
THE CONTRACTOR SHALL CONTACT NDOT FOR THE PHONE NUMBER TO BE SHOWN ON STICKER.
A LAYOUT OF THE STICKER SHALL BE PROVIDED TO NDOT FOR APPROVAL. STICKERS, MARKERS AND INSTALLATION SHALL BE INCLUDED IN THE UNIT PRICE FOR THE INSTALLATION OF CONDUIT.

TYPICAL FIBER OPTIC CONDUIT MARKER DETAILS
NTS

NOTES:

1. THE TRENCH BOTTOM SHALL BE SMOOTH, FLAT AND WITHOUT SURFACE IRREGULARITIES; OTHERWISE, A SUFFICIENT AMOUNT OF BEDDING MATERIAL SHALL BE PLACED TO PROVIDE THE REQUIRED SURFACE.
2. SLURRY MIX CEMENT SHALL BE FLOWABLE.
3. ALL TRENCHES BETWEEN METER AND POWER SERVICES MUST BE APPROVED BY A UTILITY COMPANY CUSTOMER REPRESENTATIVE. ALL DIMENSIONS ARE MINIMUM. CONTRACTOR TO CONTACT NEVADA ENERGY OR CALL BEFORE YOU DIG AT 800-227-2600.
4. CONDUIT COUPLINGS SHALL BE STAGGERED.
5. CONDUIT SIZE AND NUMBER MAY VARY. MULTIPLE CONDUITS SHALL BE BANDED OR TAPED AT 10 FEET INTERVALS. SEE PLANS FOR NUMBER, SIZE AND TYPE OF CONDUITS.
6. DETECTABLE PULL TAPE SHALL BE INSTALLED INSIDE ALL CONDUITS.
7. TOTAL TRENCH WIDTH SHALL BE 6 inches WIDER THAN THE SUM OF OUTSIDE DIAMETERS OF CONDUIT(S) INSTALLED (3.0 inches EACH SIDE OF CONDUITS) UNLESS LESS WIDTH IS APPROVED BY ENGINEER. CONDUIT(S) SHALL BE CENTERED IN TRENCH. SEE PLANS FOR NUMBER AND SIZE.
8. COORDINATE WITH "CALL BEFORE YOU DIG" AND THE NDOT DISTRICT OFFICE TO LOCATE ALL EXISTING UTILITIES PRIOR TO DIGGING.
9. TRENCH DEPTHS AND CONDUIT COVER ARE TO BE MEASURED FROM FINAL GRADE.
10. NATIVE BACKFILL SHALL NOT CONTAIN ROCKS LARGER THAN 3in.
11. ALL SPOIL MATERIALS SHALL BE REMOVED OFFSITE BY THE CONTRACTOR ACCORDING TO NDOT STANDARD SPECIFICATION SECTION 107.14.
12. RETURN DISTURBED AREA TO MATCH EXISTING GRADE.
13. FOR PAVED TRENCHES, REMOVE AND REPLACE EXISTING SURFACE. NEW SURFACE MATERIAL SHALL MEET NDOT OR THE RESPECTIVE AGENCY REQUIREMENTS WHERE WORK IS BEING PERFORMED AND BE FROM AN APPROVED COMMERCIAL SOURCE. THIS WORK SHALL BE INCLUDED IN CONDUIT BID ITEM.
14. USE CONDUIT SPACERS TO SEPARATE POWER CONDUITS FROM COMMUNICATION CONDUITS IN TRENCH BY AT LEAST 1in. PLACE SPACERS AT INTERVALS OF A MAXIMUM 5 FEET.
15. INSTALL ALL CONDUIT PER JURISDICTION STANDARDS AND SPECIFICATIONS FOR CONSTRUCTION OUTSIDE FREEWAY RIGHT-OF-WAY.

STATE OF NEVADA
DEPARTMENT OF TRANSPORTATION

CONDUIT TRENCH PAVED AND UNPAVED AREAS ITS DETAIL

STATE	PROJECT NO.	COUNTY	SHEET NO.
NEVADA			

PRELIMINARY
SUBJECT TO REVISION
2/3/2015 9:07:29 AM

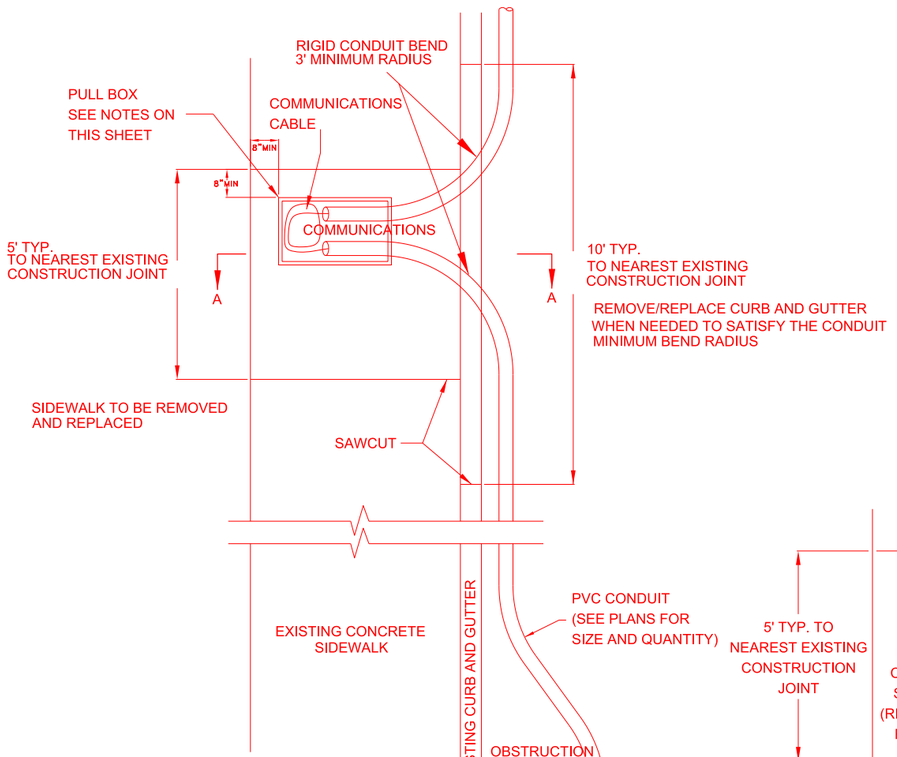

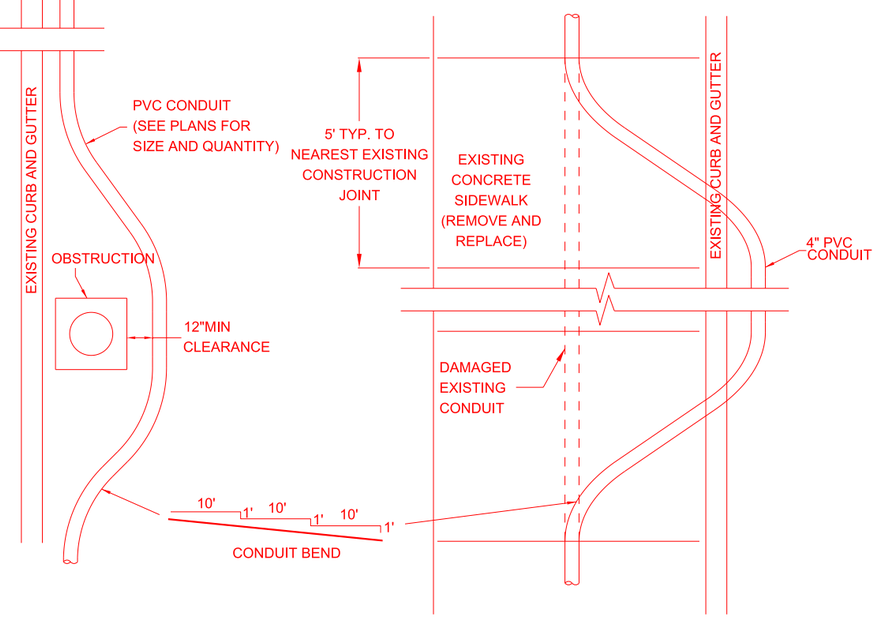

CONDUIT AND PULL BOX DETAIL (FOR EXISTING CURB & GUTTER)

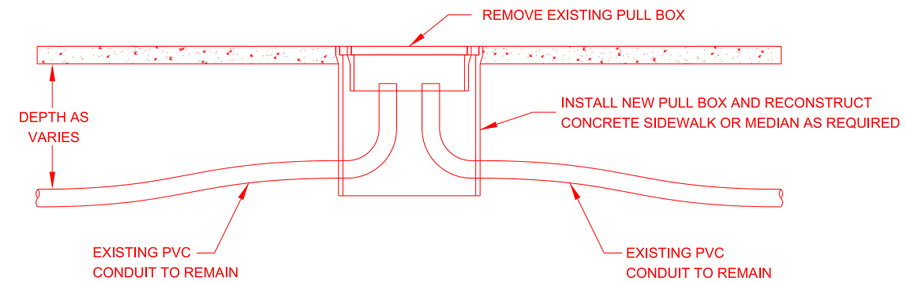

PULL BOX REPLACEMENT DETAIL

PULL BOX MAY ALSO BE PLACED
NEAR THE BACK OF CURB WITH
A MIN. 8" CLEARANCE

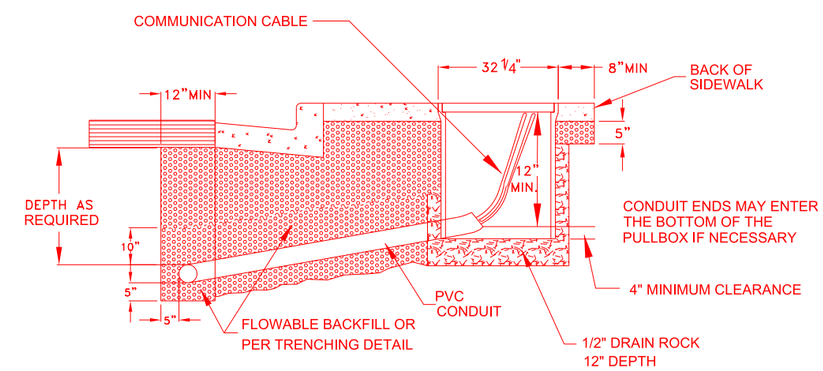

SECTION A-A

NOTES:

1 PULL BOX SHALL BE INSTALLED FOR THE COMMUNICATIONS PER APPLICABLE STANDARDS.
2 PULL BOX COVER SHALL BE INSCRIBED AS INDICATED ON PLANS.
3 APPROXIMATE LOCATIONS OF THE PROPOSED COMMUNICATION PULL BOXES ARE SHOWN ON THE PLANS. THE CONTRACTOR SHALL BE RESPONSIBLE FOR MARKING THE LOCATIONS OF THE PROPOSED COMMUNICATION PULL BOXES IN THE FIELD PER STANDARD STANDARD SPECIFICATION INTERVALS AND THESE LOCATIONS SHALL BE SUBJECT TO APPROVAL OF THE ENGINEER BEFORE INSTALLATION.

STATE OF NEVADA
DEPARTMENT OF TRANSPORTATION

CONDUIT AND PULL BOX DETAIL (FOR EXISTING CURB & GUTTER)

STATE	PROJECT NO.	COUNTY	SHEET NO.
NEVADA			

PRELIMINARY
SUBJECT TO REVISION
2/3/2015 9:07:36 AM

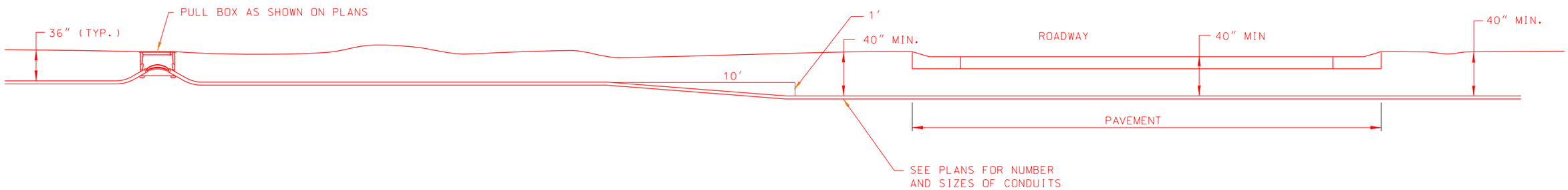

TYPICAL DIRECTIONAL DRILLING INSTALLATION
NTS

NOTES:

1. CONDUIT TO BE DIRECTIONAL DRILLED TO A MINIMUM DEPTH OF 40 INCHES BELOW THE PAVEMENT SURFACE FOR THE LENGTH OF PAVEMENT.

2. CONTRACTOR SHALL USE A BACK PULLED OR INSTALLATION METHOD THAT DOES NOT ROTATE OR TWIST MULTIPLE CONDUITS DURING INSTALLATION.

3. CONDUIT IS INCLUDED IN PAYMENT.

STATE OF NEVADA
DEPARTMENT OF TRANSPORTATION

DIRECTIONAL DRILLING TYPICAL

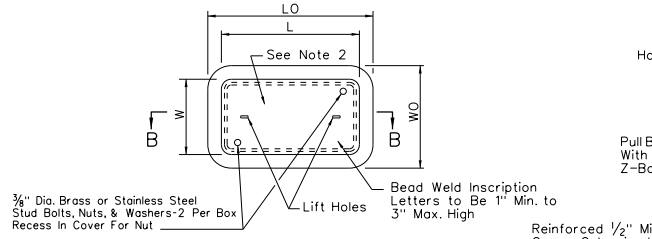

TOP VIEW

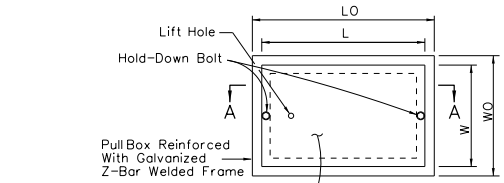

TOP VIEW

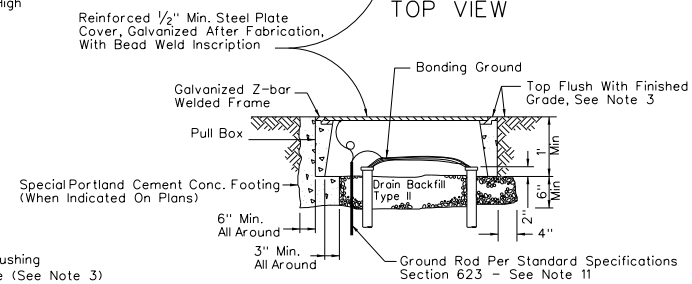

SECTION A-A

PULL BOX
No. 3 1/2, No. 5, No. 7 & No. 9

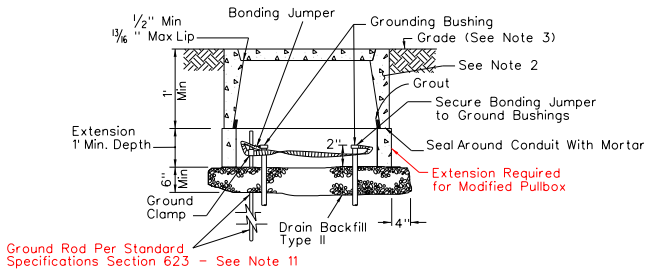

SECTION B-B

MODIFIED PULL BOX
No. 3 1/2, No. 5, No. 7

*FOR MODIFIED NO. 9, SEE SHEET M-1.13.1.

NOTES FOR PULL BOXES:

1. STEEL COVER SHALL HAVE EMBOSSED NON-SKID PATTERN.
2. STEEL REINFORCING SHALL BE PER MANUFACTURERS REQUIREMENTS.
3. TOP OF PULL BOXES SHALL BE FLUSH WITH SURROUNDING GRADE OR TOP OF ADJACENT CURB, EXCEPT THAT IN UNPAVED AREAS WHERE PULL BOX IS NOT IMMEDIATELY ADJACENT TO AND PROTECTED BY A CONCRETE FOUNDATION, POLE OR OTHER CONSTRUCTION, THE BOX SHALL BE PLACED WITH ITS TOP 1" ABOVE SURROUNDING GRADE. WHERE PRACTICABLE, PULL BOXES SHOWN IN THE VICINITY OF CURBS SHALL BE PLACED ADJACENT TO THE BACK OF CURB, AND PULL BOXES SHOWN ADJACENT TO STANDARDS SHALL BE PLACED ON SIDE OF FOUNDATION FACING AWAY FROM TRAFFIC, UNLESS OTHERWISE NOTED. WHEN PULL BOX IS INSTALLED IN SIDEWALK AREA, THE DEPTH OF THE PULL BOX SHALL BE ADJUSTED SO THAT THE TOP OF THE PULL BOX IS FLUSH WITH THE TOP OF SIDEWALK.
4. THE NOMINAL DIMENSIONS OF THE OPENING IN WHICH THE COVER SETS SHALL BE THE SAME AS THE COVER DIMENSIONS EXCEPT THE LENGTH AND WIDTH DIMENSIONS SHALL BE 1/8" GREATER.
5. ALL COVERS AND BOXES SHALL BE INTERCHANGEABLE WITH NEVADA STANDARD MALE AND FEMALE GAGES. WHEN INTERCHANGED WITH A STANDARD MALE OR FEMALE GAGE, THE TOP SURFACES SHALL BE FLUSH WITHIN 1/8". TOP OUTSIDE EDGE OF ALL CONCRETE COVERS AND PULL BOXES SHALL HAVE A 1/4" MINIMUM RADIUS.
6. PULL BOX SHALL NOT BE INSTALLED WITHIN THE BOUNDARIES OF NEW OR EXISTING CURB RAMPS.
7. PULL BOXES FOR ELECTROLIERS AND SIGNAL STANDARDS SHALL BE LOCATED AT THE SAME STATION (±5') AS THE ADJACENT ELECTROLIER OR SIGNAL STANDARD. PULL BOXES SHALL BE PLACED ADJACENT TO BACK OF CURB OR EDGE OF SHOULDER EXCEPT WHERE THIS IS IMPRACTICAL, A BOX MAY BE PLACED IN ANOTHER SUITABLE PROTECTED AND ACCESSIBLE LOCATION.
8. IN AREAS WHERE THE POSSIBILITY OF MATERIAL ERODING FROM AROUND THE PULL BOX EXISTS, THE PULL BOX SHALL BE PLACED IN DRAIN BACKFILL TYPE II-(2' DEPTH ON EACH SIDE AND 1' DEPTH), AS DIRECTED BY THE ENGINEER.
9. USE MODIFIED PULL BOXES ONLY WHEN INDICATED ON THE PLANS.
10. INSTALL CONDUIT PLUG ON EACH UNUSED CONDUIT OR INNERDUCT.
11. ALL METAL PULL BOX LIDS SHALL BE GROUNDED. INSTALL A STRANDED #4 (GREEN, 7-STRAND) THW WIRE, 4 FEET IN LENGTH, FROM THE LID TO THE BONDING GROUND. FASTEN THE #4 CONDUCTOR TO THE LID BY CAD WELDING.
12. ALL CONDUITS SHALL HAVE A MINIMUM OF 6" CLEARANCE FROM THE TOP OF THE CONDUIT TO THE COVER. SEAL ALL CONDUIT ENDS WITH A DUCT SEALING COMPOUND.

MODIFIED PULL BOX MINIMUM DIMENSION TABLE

Pull Box	CONCRETE BOX			NON-PCC BOX		CONCRETE OR NON-PCC COVERS				
	Minimum Depth Box and Extension	LO	WO	Minimum ** Thickness	Minimum Depth Box and Extension	L**	W**	R	Edge Thickness	Edge Taper
No. 3 1/2	No Extension	20"	14"	5/16"	No Extension	15 3/8"	10 1/4"	1"	2"	1/8"
No. 5	22 1/4"	28"	18"	5/16"	20"	23 1/4"	13 3/4"	1"	2"	1/8"
No. 7	24"	36"	23"	3/8"	20"	30 3/4"	17 3/4"	1"	2"	1/8"

** Top dimension

PULL BOX MINIMUM DIMENSION TABLE

Pull Box	CONCRETE BOX			STEEL COVER			EXTENSION
	LO	WO	Height	L**	W**	Edge Taper	Height
No. 3 1/2	19"+	12"+	12"+	14 1/2"+	8 3/4"+	None	12"
No. 5	25"+	15"+	12"+	20 1/2"+	10 1/2"+	None	10"
No. 7	35"+	22"+	12"+	30"+	17"+	None	8"
No. 9	52"+	35"+	14"+	47 3/4"+	30"+	None	10"

** Top Dimension
*** Top of Box

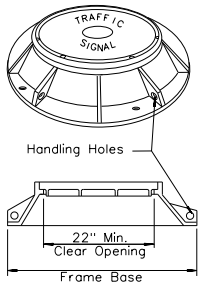

ELECTRICAL MANHOLE
FRAME & COVER

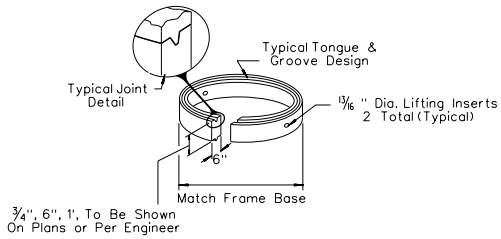

COLLAR RISER

NOTES FOR ELECTRICAL MANHOLE:

1. A COMPACTED BASE AND A CONCRETE FOOTING SUPPORT SHALL BE CONSTRUCTED PRIOR TO PLACEMENT OF THE CAST IRON FRAME AS DIRECTED BY THE ENGINEER.
2. ADJUSTMENTS TO ELEVATIONS SHALL BE MADE WITH COLLAR/RISERS AS REQUIRED. MINIMUM DEPTH 18".
3. REFER TO STANDARD PLAN R-4.7.3 FOR CONCRETE COLLAR DETAILS.

STATE OF NEVADA
DEPARTMENT OF TRANSPORTATION

PULL BOXES/
ELECTRICAL MANHOLE
FRAME & COVER

DET. *	(000)	Signed Original On File
ADOPTED */**	REVISED */**	CHIEF SAFETY/TRAFFIC ENGR.

SH199

STATE	PROJECT NO.	COUNTY	SHEET NO.
NEVADA			

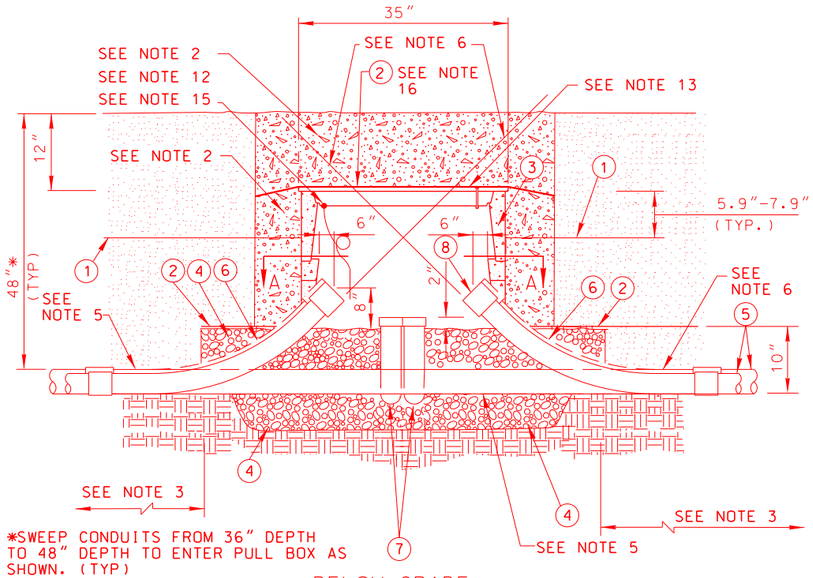

*SWEEP CONDUITS FROM 36" DEPTH TO 48" DEPTH TO ENTER PULL BOX AS SHOWN. (TYP)

BELOW GRADE INSTALLATION DETAIL

NTS

CONTRACTOR SHALL NOT BACKFILL OVER TOP OF PULL BOX FOR THIS STAGE OF CONSTRUCTION. CONTRACTOR SHALL PLACE 3/4" PLYWOOD OVER OPENING FOR PULL BOX.

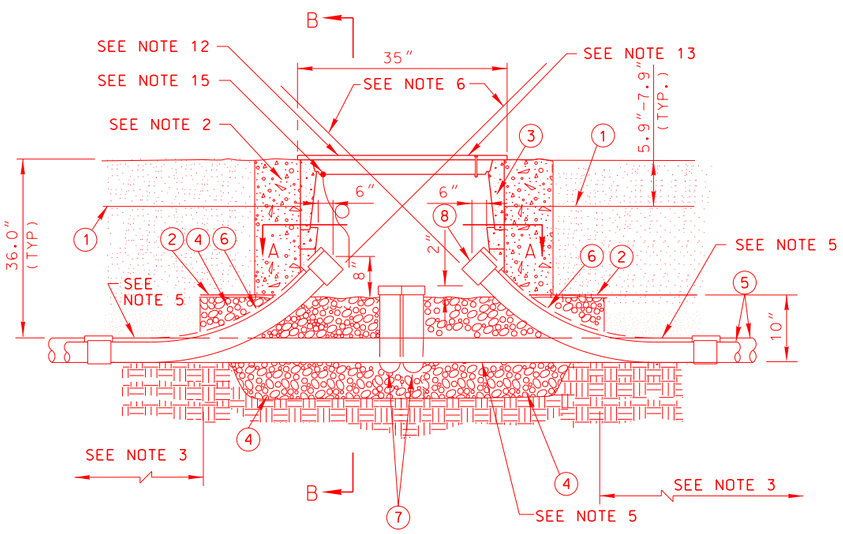

SEE NOTE 14

INSTALLATION DETAIL

NTS

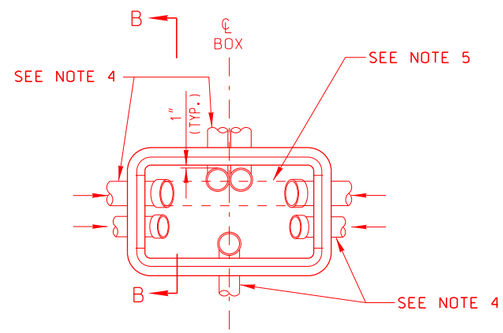

SECTION A-A

NTS

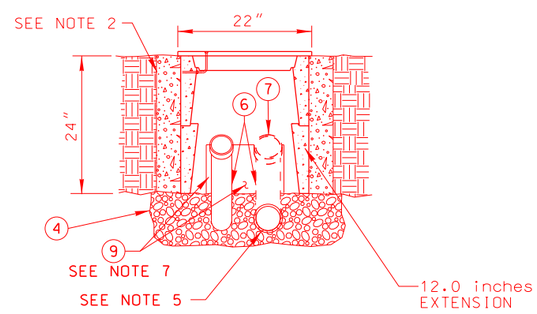

SECTION B-B

NTS

NOTE:
PULL BOX LAYOUT AND CONFIGURATION IS PROVIDED AS REFERENCE DESIGN. SUBSTITUTE PULL BOX CONFIGURATIONS MEETING PROJECT SPECIFICATIONS CONFIGURATION MAY BE USED IF APPROVED BY NDOT.

TABLE	
ITEM	DESCRIPTION
1	WARNING TAPE
2	30 lbs. FELT PAPER
3	NO. 7 PULL BOX WITH EXTENSION WITH EXCEPTIONS AS DRAWN
4	BEDDING MATERIAL PER NDOT STANDARD PLAN T-30.1.18
5	SCH. 40 PVC OR HDPE CONDUIT (S) (SEE PLANS FOR SIZE AND QUANTITY)
6	45 DEGREE PVC ELBOW, OR HDPE BEND 36in. RADIUS
7	90 DEGREE PVC ELBOW, OR HDPE BEND 15in. RADIUS
8	CONDUIT BELL END (TYPICAL)
9	KNOCK OUT 8 inches x 12.0 inches

NOTES:

1. NUMBERS IN CIRCLES REFER TO ITEMS IN TABLE.
2. BACK FILL ACCORDING TO NDOT STANDARD PLANS AND SPECIFICATIONS.
3. TRUNK LINE CONDUIT FROM THE TYPICAL TRENCH SECTION SHALL NOT DEFLECT BY MORE THAN ONE FOOT PER 10 FEET FROM THE ALIGNMENT PRECEDING OR FOLLOWING THE PULL BOX.
4. SEE PLAN SHEETS FOR NUMBER AND SIZE OF CONDUIT(S).
5. NEW TRUNK LINE FIBER OPTIC CONDUIT(S) SHALL PASS UNDER NO. 7 PULL BOXES. AT CONDUIT TRANSITION LOCATIONS (BRIDGE STRUCTURES, METAL CONDUIT TO HDPE OR PVC, ETC.) ALL CONDUITS SHALL ENTER PULL BOX. AT LOCATIONS WHERE POWER CONDUCTORS, DETECTOR CABLES, LOOP LEAD-IN CABLES, DETECTOR CABLE, RAMP METER SIGNAL CABLES OR BRANCH FIBER OPTIC CABLES ENTER OR PASS THROUGH, ALL OTHER CONDUITS SHALL ENTER THE PULL BOX.
6. BOTTOM OF CONDUIT CENTERLINE SHALL BE ALIGNED TO EXIT TOP OF PULL BOX TO FACILITATE CABLE PULLING. PER SECTION 623.01.03 OF THE STANDARD SPECIFICATIONS.
7. USE FELT PAPER TO BLOCK OPENING BETWEEN CONDUITS.
8. INSTALL CONDUIT PLUG ON EACH EMPTY CONDUIT ENTERING PULL BOX.
9. SEAL ENDS OF ALL CONDUITS WITH CABLES OR CONDUCTORS WITH NDOT APPROVED MATERIAL.
10. A PULL BOX EXTENSION CAN BE ELIMINATED IF THE PULL BOX IS SUPPLIED WITH A DEPTH OF 24in. OR GREATER.
11. PULL BOX HEIGHT ABOVE FINISHED GRADE SHALL PERMIT 4in. OF SURFACE LANDSCAPING, IF APPLICABLE, TO MATCH EXISTING CONDITIONS.
12. THIS PULL BOX SHALL BE DESIGNED FOR TRAFFIC AREAS. STEEL COVERS SHALL BE USED, COVER AND BOX SHALL SUPPORT AASHTO H20-44 TRUCK LOADING.
13. "NDOT" SHALL BE THE TITLE ENGRAVED IN THE LID UNLESS NOTED OTHERWISE IN THE CONTRACT DOCUMENTS. BOND AND GROUND LID PER SECTION 623.02.17 OF THE STANDARD SPECIFICATIONS.
14. GROUND CONDUCTOR(S) SHALL BE BONDED AND GROUNDED PER STANDARD SPECIFICATIONS (AS REQUIRED).
15. PULL BOX LID BONDING/GROUND CONDUCTOR SHALL BE 4 ft. OF #4 GREEN STRANDED GROUND WIRE, CAD WELDED TO THE LID PER NDOT REQUIREMENTS. GROUND WIRE SHALL BE COILED FOR FUTURE BONDING AND GROUNDING. IF PULL BOX INSTALLATION IS REPLACING AN EXISTING PULL BOX, THEN THE CONDUCTOR SHALL BE BONDED/GROUNDED TO THE EXISTING GROUNDING SYSTEM.
16. COVER TOP OF PULL BOX WITH 30 lb. FELT PAPER TO HELP PROTECT METAL LID.
17. CONTRACTOR TO GPS LOCATE AND BURY ALL PULL BOXES PER NDOT GUIDE "SPECIAL INSTRUCTIONS FOR SURVEY, MAPPING OR GIS CONSULTANTS," CURRENT EDITION.

STATE OF NEVADA
DEPARTMENT OF TRANSPORTATION

NO. 7 PULL BOX MODIFIED TYPICAL INSTALLATION

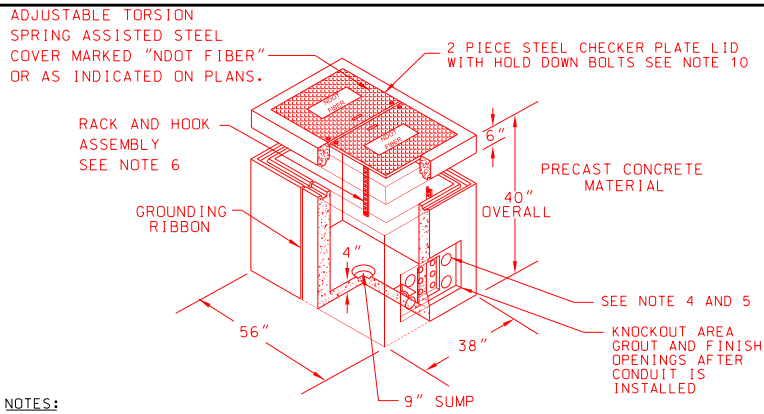

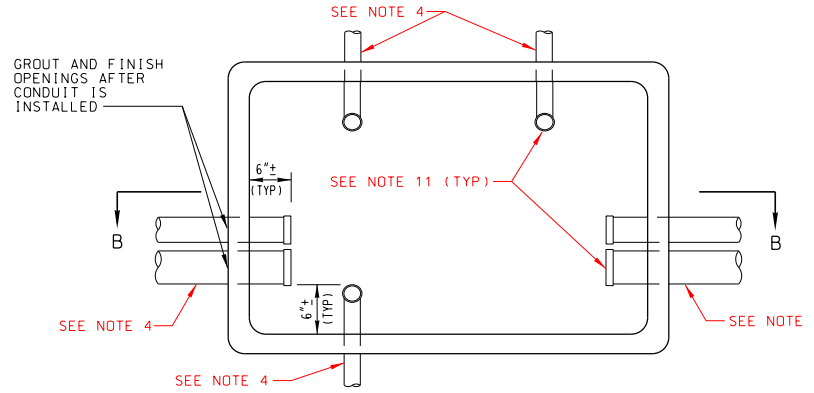

PLAN VIEW
NTS

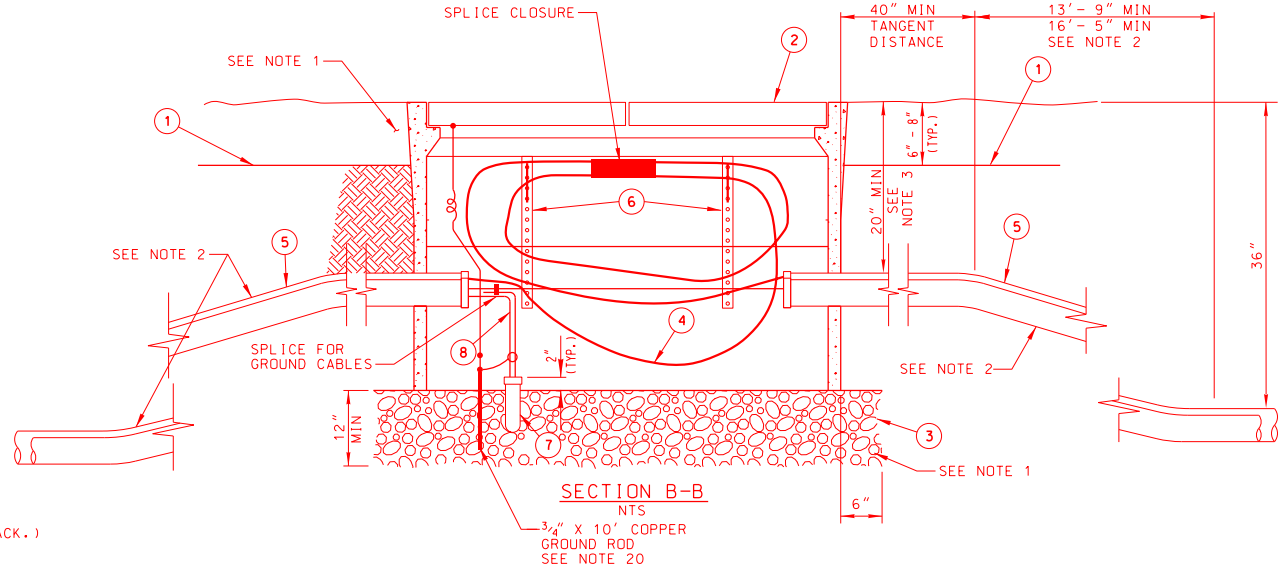

SECTION B-B
NTS

NOTES:

1. BACKFILL ACCORDING TO NDOT STANDARD PLANS AND SPECS.
2. TRUNKLINE CONDUIT(S) FROM THE TYPICAL TRENCH SECTION SHALL NOT DEFLECT BY MORE THAN ONE FOOT PER 10 FEET FROM THE ALIGNMENT PRECEDING OR FOLLOWING PULL BOX ENTRANCE/EXIT.
3. TOP OF TRUNKLINE CONDUITS ENTERING THROUGH SIDE OF PULL BOX SHALL BE LOCATED AT LEAST 20" BELOW EXISTING FINISHED GRADE.
4. SEE PLAN SHEETS FOR NUMBER AND SIZE OF CONDUIT.
5. IF MORE THAN 3 CONDUITS ARE REQUIRED, KNOCKOUT SHALL BE WIDENED 3/8" MORE THAN THE ADDITIONAL CONDUIT WIDTH.
6. ALL PULL BOXES SHALL BE FURNISHED WITH TWO RACKS & HOOKS INSTALLED ON EACH OF THE TWO LONG SIDES.
7. TRUNKLINE CONDUITS SHALL ENTER THROUGH KNOCKOUTS.
8. PULL BOX AND STEEL COVER SHALL SUPPORT AASHTO H20-44 TRUCK LOADING.
9. LOCKING MECHANISM SHALL BE PROVIDED FOR COVER. FOUR 3/4" PENTA HEAD BOLTS AT 90° SHALL BE USED. ONE 3/4" PENTA HEAD SOCKET AND RATCHET SHALL BE PROVIDED TO NDOT FOR EVERY 10 PULL BOXES.
10. "NDOT FIBER" SHALL BE THE TITLE ENGRAVED IN THE LID OR AS INDICATED ON PLANS.
11. ALL CONDUITS SHALL HAVE BELL ENDS.
12. ALL POWER CONDUCTORS INSIDE PULL BOX SHALL BE TAGGED "POWER".
13. NUMBERS IN CIRCLES REFER TO ITEMS IN TABLE.
14. SECURE UNDERGROUND SPLICE CLOSURES IN PULL BOXES USING THE RACKS AND HOOKS. ORIENT THE UNDERGROUND SPLICE CLOSURE SO THE END CAP IS AT LEAST 6" BELOW THE OPPOSITE END.
15. PULL BOX HEIGHT SHALL MATCH EXISTING FINISHED GRADE.
16. EACH NUMBER 9 PULL BOX SHALL BE EQUIPPED WITH 100 FEET OF SLACK TRUNKLINE AND BRANCH FIBER OPTIC CABLE FOR EACH CABLE ENTERING THE PULL BOX. (i.e., TRUNKLINE TYPICALLY WILL HAVE 200 FEET OF SLACK.)
17. INSTALL CONDUIT PLUGS ON EACH CONDUIT OR INNERDUCT ENTERING THE PULL BOX.
18. ALL METAL PULL BOX LIDS SHALL BE GROUNDED. INSTALL A STRANDED #4 (GREEN, 7-STRAND) THW WIRE, 4 FEET IN LENGTH, FROM THE LID TO THE BONDING GROUND. FASTEN THE #4 CONDUCTOR TO THE LID BY CAD WELDING. ALL CONDUITS SHALL HAVE A MINIMUM OF 6" CLEARANCE FROM THE TOP OF THE CONDUIT TO THE LID, AT NO DIRECT PAYMENT.
19. SEAL ALL CONDUIT ENDS WITH A DUCT SEALING COMPOUND. USE NSI INDUSTRIES DUCT SEALING COMPOUND OR AN APPROVED EQUAL (NO DIRECT PAYMENT).
20. GROUND CONDUCTOR(S) SHALL BE BONDED AND GROUNDED PRE STANDARD SPECIFICATION(S) AS REQUIRED.
21. DESIGN LOAD: H-20 WHEEL LOADINGS
22. SUITABLE FOR USE IN OFF STREET LOCATIONS WHERE NOT SUBJECT TO HIGH DENSITY TRAFFIC. IT SHALL NOT BE USED IN TRAVEL OR PARKING LANES.
23. INSIDE DIMENSIONS - 30"X45"X36"
24. FOR USE AT FIBER OPTIC SPLICE POINTS.

TABLE

ITEM	DESCRIPTION
1	WARNING TAPE
2	NO. 9 PULL BOX WITH LID & EXTENSIONS
3	BEDDING MATERIAL PER NDOT STANDARD PLAN T-30.1.18
4	FIBER OPTIC CABLE, AS REQUIRED
5	CONDUIT (SEE PLANS FOR SIZE AND QUANTITY)
6	RACK & HOOK ASSEMBLY (SEE NOTE 6)
7	90 DEGREE ELBOW, 15" RADIUS
8	POWER CONDUCTORS (SEE NOTE 12)

STATE OF NEVADA
DEPARTMENT OF TRANSPORTATION

NO. 9 (MODIFIED) PULL BOX AND CONDUIT DETAIL

DET. *	(000)	Signed Original On File
ADOPTED */**	REVISED */**	CHIEF SAFETY/TRAFFIC ENGR.

T-X

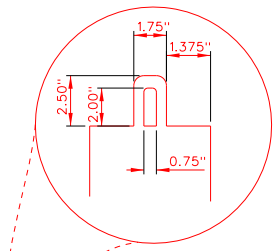

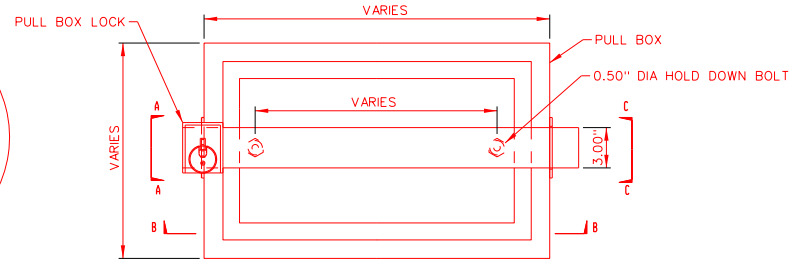

PULL BOX LOCK FOR NO. 3 1/2, 5, & 7 TRAFFIC RATED PULL BOXES

TOP VIEW
NTS

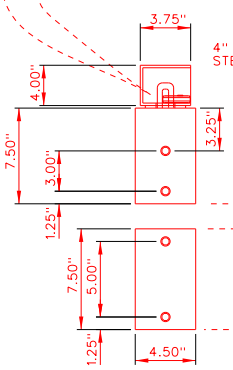

SECTION A-A
NTS

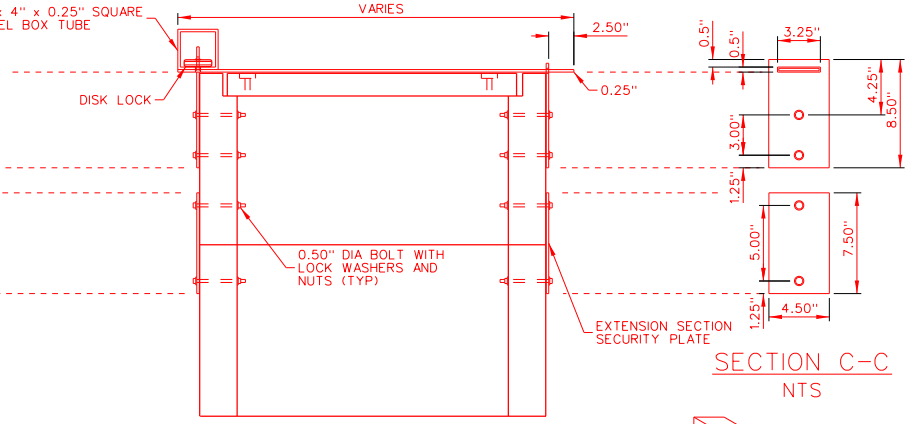

SECTION B-B
NTS

SECTION C-C
NTS

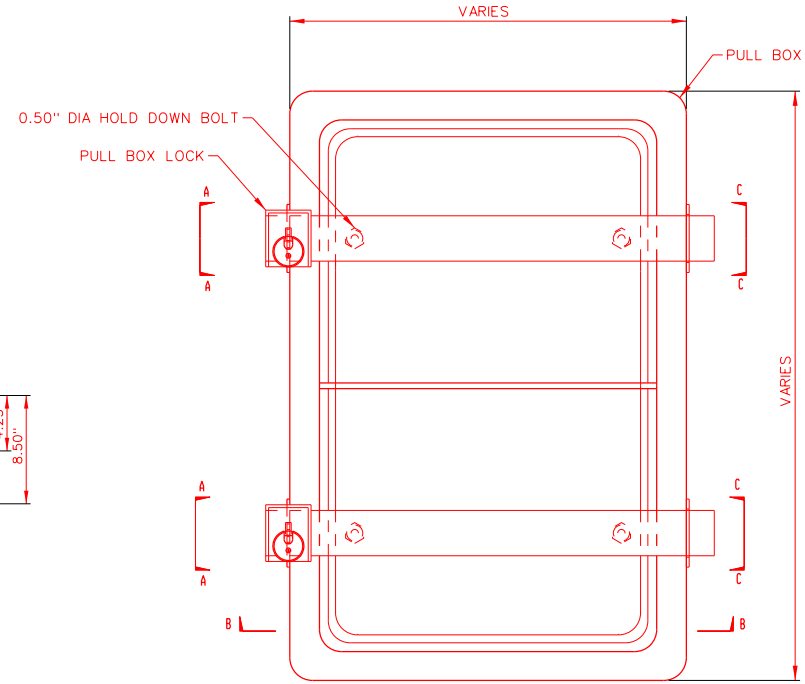

NO. 9 PULL BOX (TYP)

TOP VIEW
NTS

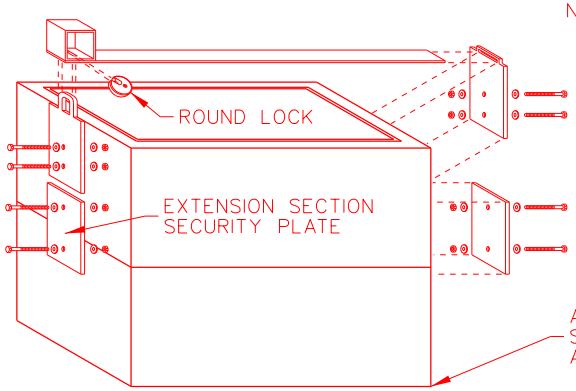

NO. 3 1/2, 5, & 7 PULL BOX LOCK ASSEMBLY

TOP VIEW
NTS

*LOCKING MECHANISM MUST
COVER HOLD DOWN BOLTS

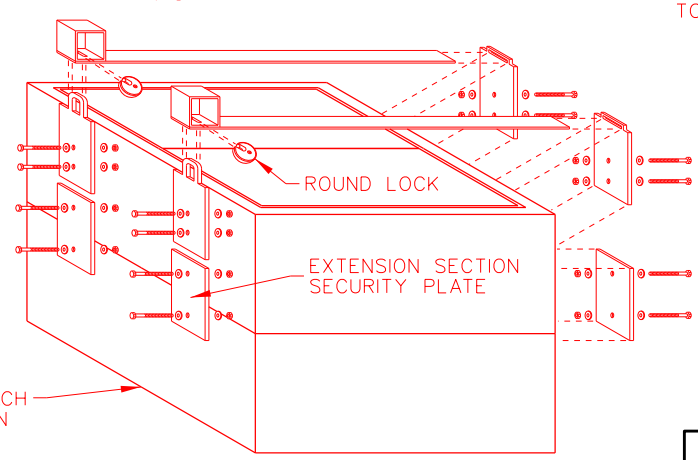

NO. 9 PULL BOX LOCK ASSEMBLY

TOP VIEW
NTS

*LOCKING MECHANISM MUST
COVER HOLD DOWN BOLTS

STATE OF NEVADA
DEPARTMENT OF TRANSPORTATION

PULL BOX
LOCKING DETAIL

DET. *	(000)	Signed Original On File
ADOPTED */**	REVISED */**	CHIEF SAFETY/TRAFFIC ENGR.

T-X

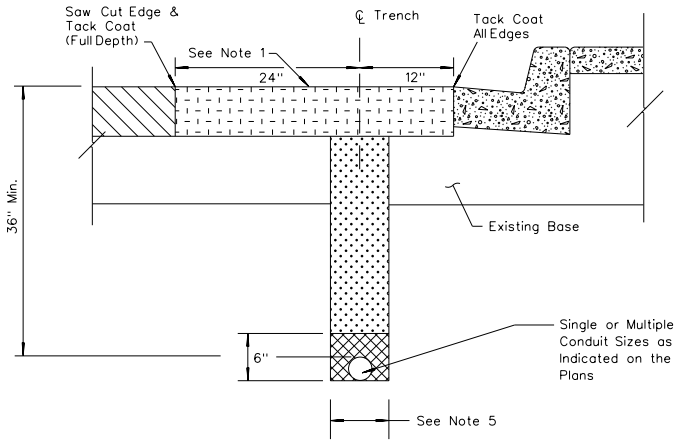

LONGITUDINAL

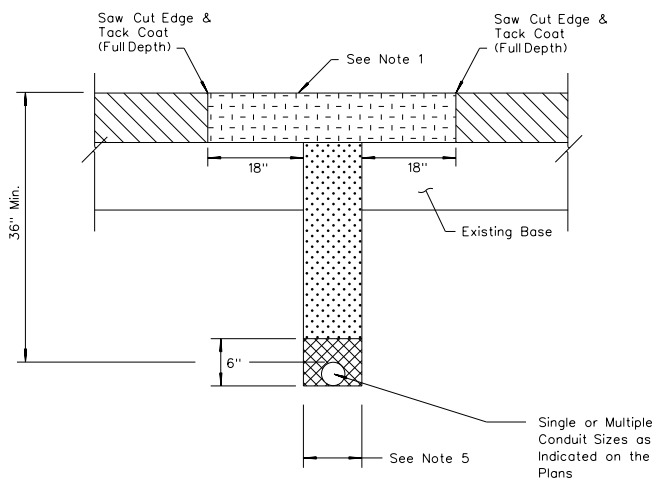

TRANSVERSE

TRENCHING IN PAVEMENT

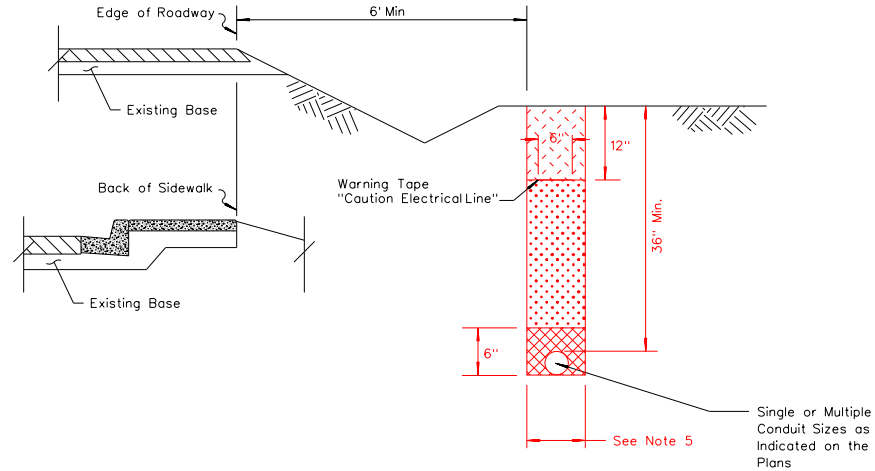

TRENCHING IN NATIVE SOIL (CLASS A SLURRY)

NOTES:

1. REMOVE EXISTING PAVEMENT AND REPLACE WITH NEW APPROVED MATERIAL OF SAME TYPE. MATCH EXISTING PAVEMENT DEPTH BUT NOT LESS THAN 6", AND SEAL NEW SURFACE AS DIRECTED BY THE ENGINEER.
2. RECOMPACT EXISTING BASE MATERIAL AROUND TRENCH TO MEET COMPACTION REQUIREMENTS FOR THAT MATERIAL TYPE AND LOCATION.
3. NEW ASPHALT AND CONCRETE PAVEMENT MATERIAL MUST BE APPROVED BY THE ENGINEER AND OBTAINED FROM AN APPROVED SOURCE.
4. UNLESS OTHERWISE PROVIDED FOR IN THE BASE AND SURFACE SUMMARIES NEW PAVEMENT MATERIAL AND TRENCHING SHALL NOT BE PAID FOR DIRECTLY BUT INCLUDED IN THE PRICE FOR THE CONDUIT.
5. TOTAL TRENCH WIDTH SHALL BE 6" WIDER THAN THE OUTSIDE EDGES OF CONDUIT(S) INSTALLED. USE CONDUIT SPACERS TO SEPARATE MULTIPLE CONDUITS IN TRENCH BY AT LEAST 1". PLACE SPACERS AT INTERVALS OF 5' MAXIMUM. CONDUITS SHALL BE CENTERED IN TRENCH.
6. FOR TRENCHING IN A NON-NDOT-OWNED FACILITY USE THE OWNER'S STANDARDS FOR TRENCHING, COMPACTION, AND PATCHING.
7. LONGITUDINAL TRENCHING IN SHOULDER: IF SHOULDER IS 4' WIDE OR LESS, REMOVE ALL SURFACE MATERIAL FROM EDGE OF OIL TO SHOULDER STRIPE AND REPLACE.
8. ENGINEER MAY FOR GOOD CAUSE, REQUIRE WIDER PATCH SECTIONS OR OTHERWISE ALTER THE REQUIREMENTS.
9. IF SAW CUT IS WITHIN 2' OF AN EXISTING PAVEMENT EDGE OR EXISTING PAVEMENT PATCH, REMOVE EXISTING PAVEMENT TO THAT EDGE AND REPLACE ENTIRE SECTION
10. IF SAWCUT EDGES FOR TRENCH FALL WITHIN A WHEEL PATH, SAWCUT SHALL BE EXTENDED TO, AND REMOVAL MADE TO EDGE OF THE TRAVEL LANE. OPTIONALLY THE ENTIRE TRAVEL LANE CAN BE ROTOMILLED TO A DEPTH OF 2" AND OVERLAYED WITH 2" OF BITUMINOUS PLANTMIX AS DIRECTED BY THE ENGINEER.
11. CONTRACTOR SHALL BE RESPONSIBLE FOR REPLACEMENT OF LOOP DETECTORS, ADJUSTMENTS OF UTILITIES AND SURVEY MONUMENTS TO GRADE AND INSTALLATION OF TEMPORARY PAVEMENT MARKINGS.
12. PERMANENT RESURFACING SHALL NOT BE PLACED ON TRENCHES BACKFILLED WITH CONCRETE SLURRY FOR A MINIMUM OF 7 DAYS AFTER PLACEMENT OF THE CONCRETE SLURRY OR SIMILAR MATERIAL. PROVIDE TEMPORARY COVER OR BACKFILL AS DIRECTED BY THE ENGINEER.
13. USE OF ROCK WHEEL TRENCHING MACHINES OR SIMILAR EQUIPMENT MAY BE PERMITTED WITHIN PAVED AREAS OR WITHIN 1' OF THE EDGE OF PAVING, AS DIRECTED BY THE ENGINEER.
14. SAND BEDDING SHALL CONFORM TO GRADATION REQUIREMENTS IN SUBSECTION 706.03.03 FINE AGGREGATES.
15. IF INSTALLING UNDERGROUND ELECTRICAL FACILITIES OR SUPPLIES REFER TO NAC 408.447 AND 408.453.
16. BACKFILL IN ACCORDANCE WITH SECTION 207 IF WITHIN THE ROADSIDE SLOPE OR DITCHES. OTHERWISE THE BACKFILL MAY BE ACCOMPLISHED WITH NATIVE MATERIAL COMPACTED TO 90% OR AS DIRECTED BY THE ENGINEER.

LEGEND:

- Existing Pavement
- Limits of Removal & Repair of Pavement
- Sand Bedding (See Note 14)
- Class A Slurry Cement Backfill
- Backfill

STATE OF NEVADA
DEPARTMENT OF TRANSPORTATION

TRAFFIC CONDUIT
TRENCHING DETAIL

DET. *	(000)	Signed Original On File
ADOPTED */**	REVISED */**	CHIEF SAFETY/TRAFFIC ENGR.

T-30.1.2.1

T-X

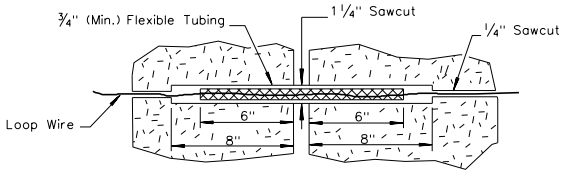

PLAN

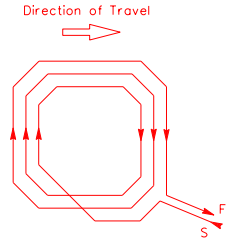

WINDING DETAIL

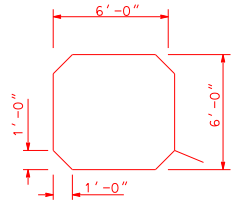

SAWCUT DETAIL

SYMBOL

ALTERNATE LOOP DETECTOR CONFIGURATION

*Use only as directed on plans or by engineer.

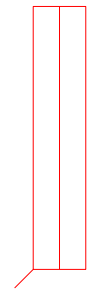

SYMBOL

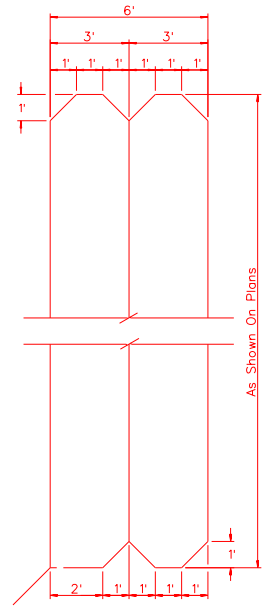

WINDING DETAIL (TWO TURNS)

SAW SLOT DETAIL

QUADRAPOLE LOOP DETECTOR

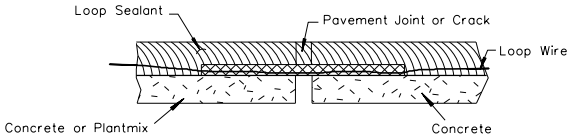

ELEVATION

PAVEMENT JOINT CROSSING DETAILS

No Direct Payment

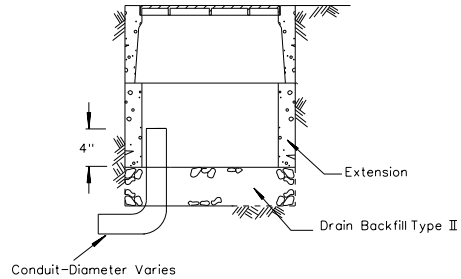

SECTION A-A

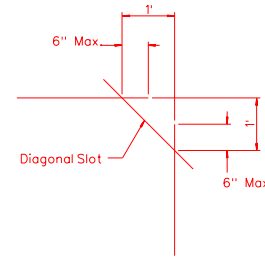

PLAN VIEW OF DIAGONAL SLOT AT CORNERS

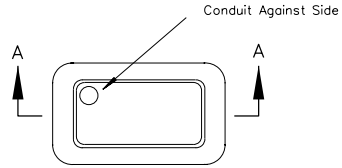

NO.5 PULL BOX (MODIFIED)

For Conduit Location
See Notes 1 & 2

NOTES:

1. ALL PULL BOXES SHALL BE NO. 5 (MODIFIED). SEE SHEET T-30.1.18 FOR DETAILS NOT SHOWN.
2. PAYMENT SHALL BE MADE UNDER THE FOLLOWING ITEMS:
   CONDUIT - DIAMETER VARIES
   NO. 5 PULL BOX (MODIFIED)
   6 FOOT x 6 FOOT DETECTOR LOOPS
3. ALTERNATE LOOP DETECTOR CONFIGURATION SHALL BE 6' X 6' SQUARE WITH 3 TURNS OF WIRE.

STATE OF NEVADA
DEPARTMENT OF TRANSPORTATION

No. 5 (MODIFIED) PULL BOX & PAVEMENT JOINT LOOP CROSSING AND OTHER DETAILS

DET. *	(000)	Signed Original On File
ADOPTED */**	REVISED */**	CHIEF SAFETY/TRAFFIC ENGR.

T-30.1.4.1

SH199

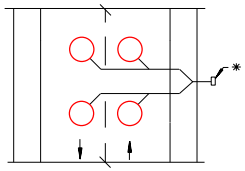

2 – LANE
BOTH DIRECTIONS

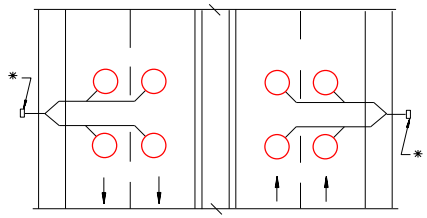

4 – LANE

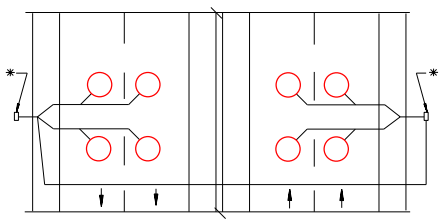

4 – LANE

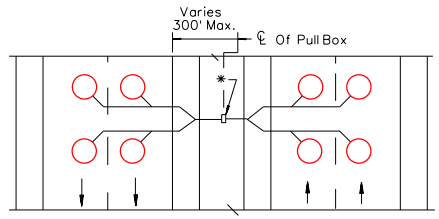

4 – LANE

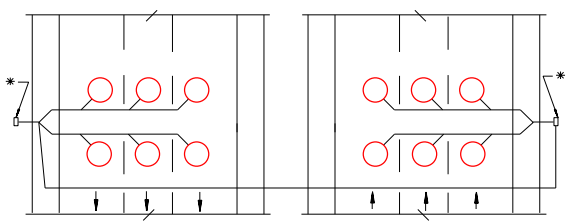

6 – LANE

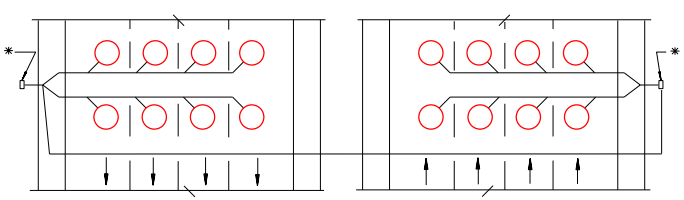

8 – LANE

NOTES:

1. ALL LOOPS SHALL BE 6' DIAMETER ROUND LOOPS WITH 4 TURNS OF WIRE.
2. LOOP WIRE PAIRS FROM LOOP PROPER TO NO. 5 PULL BOX (MODIFIED) SHALL BE TWISTED NO LESS THAN FOUR TIMES PER FOOT.
3. LOOP WIRE PAIRS SHALL BE TWISTED NO LESS THAN FOUR TIMES PER FOOT FOR THE ENTIRE HOME RUN.
4. LOOP CUTS SHALL BE 3/8" WIDE x 2 1/2"-3" MAXIMUM DEPTH.
5. LOOPS SHALL BE CENTERED IN ALL TRAVEL AND TURN LANES.
6. LOOP WIRE SHALL BE AWG 14 STRANDED IMSA-51-1.
7. EACH INDIVIDUAL CONDUCTOR SHALL BE A CONTINUOUS RUN WITH NO SPLICES AND SHALL BE LABELED AT EACH END WITH THE LANE ASSIGNMENT.
8. IT SHALL BE THE CONTRACTORS RESPONSIBILITY TO ASCERTAIN THAT THE LOOP PLACEMENT IS NOT IN CONFLICT WITH OTHER ITEMS OF WORK.
9. FIVE WORKING DAYS PRIOR TO PLACEMENT OF LOOP DETECTORS, THE RESIDENT ENGINEER SHALL NOTIFY THE TRAFFIC SECTION OF THE PLANNING DIVISION (888-7155) FOR ASSISTANCE IN ESTABLISHING THE EXACT LOCATION.
10. DETECTORS SHALL BE INSTALLED AFTER DENSE GRADE PAVING OR PROFILE GRADE IS ESTABLISHED.
11. LOOP LOCATION SHALL BE MARKED ON THE EDGE OF THE PAVEMENT BY PAINTING THE WORD "LOOP" IN WHITE.
12. SEE STANDARD SHEET T-30-1.4.1 FOR PAVEMENT JOINT DETAILS.
13. PAYMENT WILL BE MADE UNDER THE FOLLOWING ITEMS:
    - NO. 5 PULL BOX (MODIFIED) (EACH)
    - 6' DIA. LOOPS (EACH)
    - 3" DIA. CONDUIT (LINFT)

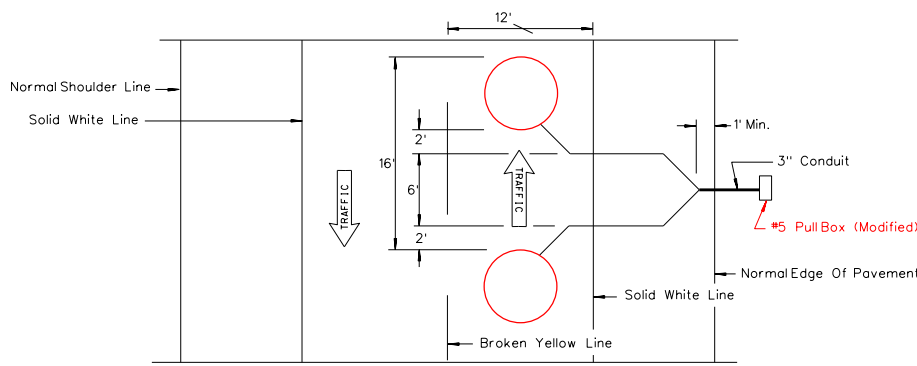

SPEED DETECTOR LOOP PLACEMENT DETAIL
(OPPOSITE LANE LOOPS NOT SHOWN FOR CLARITY)

LEGEND:

* –No. 5 Pull Box (Modified)

STATE OF NEVADA
DEPARTMENT OF TRANSPORTATION

SPEED DETECTOR LOOP CONFIGURATION AND NOTES

DET. *	(000)	Signed Original On File
ADOPTED */**	REVISED */**	CHIEF SAFETY/TRAFFIC ENGR.

SH199

T-30.1.4.3

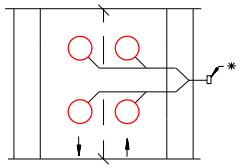

2 – LANE
BOTH DIRECTIONS

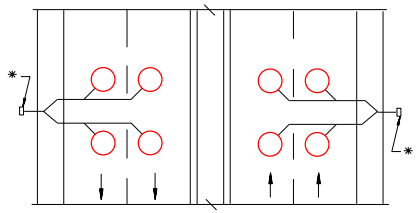

4 – LANE
WITH TWO SPECIAL M-1 CABINETS
LOCATED TO THE OUTSIDE

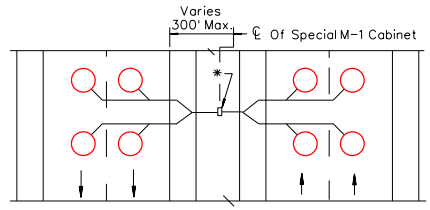

4 – LANE
WITH ONE SPECIAL M-1 CABINET
LOCATED IN MEDIAN

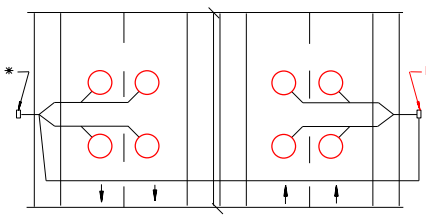

4 – LANE
WITH ONE SPECIAL M-1 CABINET
TO THE OUTSIDE

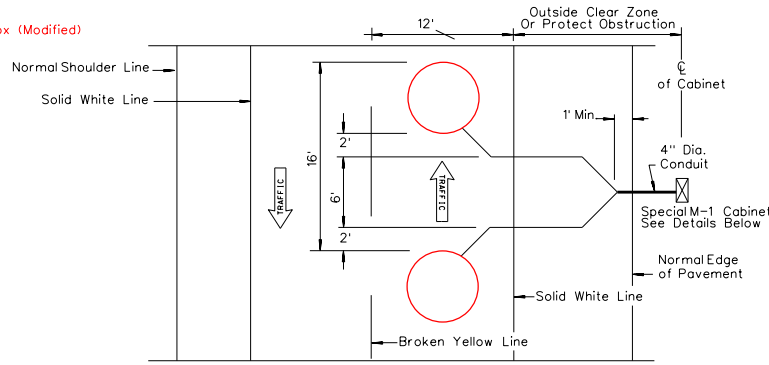

ATR DETECTOR LOOP PLACEMENT DETAIL
OPPOSITE LANE LOOPS NOT SHOWN FOR CLARITY

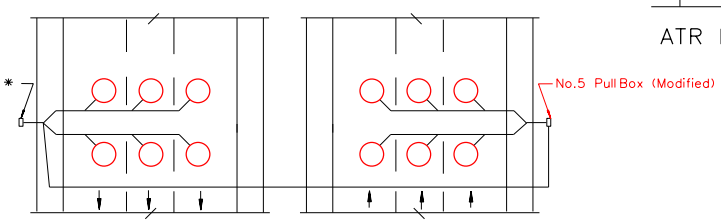

6 – LANE
WITH ONE SPECIAL M-1 CABINET
TO THE OUTSIDE

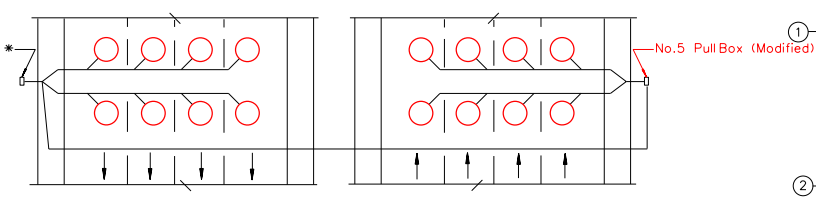

8 – LANE
WITH ONE SPECIAL M-1 CABINET TO THE OUTSIDE

NOTES:

1. ALL LOOPS SHALL BE 6' DIAMETER ROUND LOOPS WITH 4 TURNS OF WIRE.
2. LOOP WIRE PAIRS FROM LOOP PROPER TO NO. 5 PULL BOX (MODIFIED) OR SPECIAL M-1 CABINET SHALL BE TWISTED NO LESS THAN FOUR TIMES PER FOOT.
3. LOOP WIRE PAIRS SHALL BE TWISTED NO LESS THAN FOUR TIMES PER FOOT FOR THE ENTIRE HOME RUN.
4. LOOP CUTS SHALL BE ⅜" WIDE x 2½"–3" MAXIMUM DEPTH.
5. LOOPS SHALL BE CENTERED IN ALL TRAVEL AND TURN LANES.
6. LOOP WIRE SHALL BE AWG 14 STRANDED IMSA-51-1.
7. EACH INDIVIDUAL CONDUCTOR SHALL BE A CONTINUOUS RUN WITH NO SPLICES AND SHALL BE LABELED AT EACH END WITH THE LANE ASSIGNMENT.
8. IT SHALL BE THE CONTRACTORS RESPONSIBILITY TO ASCERTAIN THAT THE LOOP PLACEMENT IS NOT IN CONFLICT WITH OTHER ITEMS OF WORK.
9. FIVE WORKING DAYS PRIOR TO PLACEMENT OF LOOP DETECTORS, THE RESIDENT ENGINEER SHALL NOTIFY THE TRAFFIC SECTION OF THE PLANNING DIVISION (888-7155) FOR ASSISTANCE IN ESTABLISHING THE EXACT LOCATION.
10. DETECTORS SHALL BE INSTALLED AFTER DENSE GRADE PAVING OR PROFILE GRADE IS ESTABLISHED.
11. LOOP LOCATION SHALL BE MARKED ON THE EDGE OF THE PAVEMENT BY PAINTING THE WORD "LOOP" IN WHITE.
12. FOR SPECIAL M-1 CABINET ONLY – IN CONFORMANCE WITH NATIONAL ELECTRIC CODE 250-56, WHEN THE GROUNDING PLATE DOES NOT HAVE A RESISTANCE TO GROUND OF 25 OHMS OR LESS, IT SHALL BE AUGMENTED BY ONE ADDITIONAL ELECTRODE PREFERABLY A ½" X 96" COPPER GROUND ROD.
13. IF GUARDRAIL/BARRIER RAIL IS PROVIDED, THE CABINET SHALL BE PLACED A MINIMUM OF 24" BEHIND RAIL.
14. SEE STANDARD SHEET T-30-1.4.1 FOR PAVEMENT JOINT DETAILS.
15. PAYMENT WILL BE MADE UNDER THE FOLLOWING ITEMS:
    SPECIAL CABINET (EACH)
    SPECIAL M-1 CABINET (EACH)
    NO. 5 PULL BOX (MODIFIED) (EACH)
    4" DIA. CONDUIT (LINFT)
    6' DIA. LOOPS (EACH)

LEGEND:

- ✱ Special M-1 Cabinet
- ① Main Switch
- ② Field Wire Terminal Blocks
- ③ N.E.M.A. Standard Plug Receptacle With Grounding Contact
- ④ Radio Interference Suppressor
- ⑤ Shelf
- ⑥ Thermostat-Controlled Fan With T-Vent

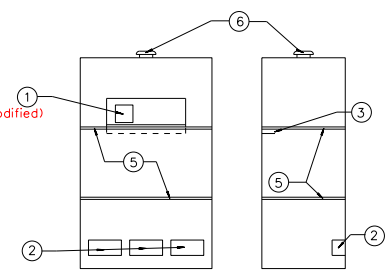

SPECIAL M-1 CABINET
SEE SHEET T-30.1.5 FOR ADDITIONAL DETAILS

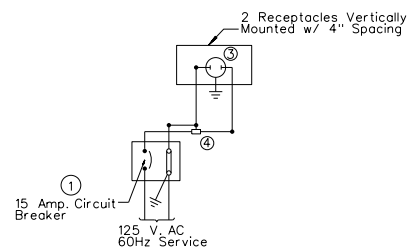

CABINET WIRING

STATE OF NEVADA
DEPARTMENT OF TRANSPORTATION

ATR DETECTOR LOOP
CONFIGURATION AND NOTES

DET. *	(000)	Signed Original On File
ADOPTED */**	REVISED */**	CHIEF SAFETY/TRAFFIC ENGR.

SHT99

T-30.1.4.4

ATTACHMENT 21-1
PROJECT ROW ACCESS DATES AND CONSTRAINTS

This page intentionally left blank

Attachment 21-1 DRAFT

Revised 2/23/2015

NDOT PARCEL NO.	TYPE	PHYSICAL ADDRESSS	Delivery Date	Ownership	Demolition Package / Status
040.844	Residential	1913 Loch Lomond Way	NTP2	NDOT (Flower Trust)	
040.864	Residential	1909 Loch Lomond Way	NPT2	NDOT (Mc Knight)	
040.883	Residential	1905 Loch Lomond Way	NTP2	NDOT (Mc Kinley)	
040.896	Residential	1901 Loch Lomond Way	3/7/2016	1901 LOCH LOMOND TRUST	
040.910	Residential	1825 Loch Lomond Way	3/7/2016	LOCH LOMOND IRREVOCABLE TRUST	
040.923	Residential	1821 Loch Lomond Way	NTP2	Favela	
040.936	Residential	1817 Loch Lomond Way	NTP2	Jarow	
040.949	Residential	Loch Lomond Way	NTP2	Youmas	
040.961	Commercial	2056 Highland Ave	6/4/2016	TBS	
040.962	Residential	1809 Loch Lomond Way	NTP2	NDOT (Sedlmeyer)	
040.975	Residential	1805 Loch Lomond Way	NPT2	Schmidt	
040.980	Commercial	2000 Highland Ave	6/4/2016	Ferris	
040.980	Billboard	2000 Highland Ave	6/4/2016	Ferris	
040.988	Residential	1801 Loch Lomond Way	NTP2	NDOT (Torres)	
040.998	Commercial	1920 Highland Ave	6/4/2016	TNT O'Rourke	
041.001	Residential	1733 Loch Lomond Way	NTP2	NDOT (Clemenson Family Trust)	
041.014	Residential	1729 Loch Lomond Way	3/7/2016	LOCH LOMOND TRUST	
041.017	Commercial	1918 Highland Ave	6/4/2016	Ferris	
041.027	Residential	1725 Loch Lomond Way	3/7/2016	LOCH LOMOND WAY TRUST	
041.036	Commercial	1916 Highland Ave	6/4/2016	1916 Highland	
041.040	Residential	1721 Loch Lomond Way	NPT2	ShurtzZ	
041.044	Residential	1717 Loch Lomond	NTP2	NDOT (Marsh)	DEMO PKG A - dirt lot
041.054	Commercial	1914 Highland Ave	6/4/2016	Pueblo	
041.058	Residential	1713 Loch Lomond	NTP2	NDOT (Sorrels)	DEMO PKG C - dirt lot
041.071	Residential	1709 Loch Lomond	NTP2	NDOT (Moore)	DEMO PKG A - dirt lot
041.084	Residential	1705 Loch Lomond	NTP2	NDOT (Vinas)	DEMO PKG A - dirt lot
041.091	Commercial	1750 Highland Ave	6/4/2016	T&T, O'Rourke	
041.110	Commercial	1712 Highland Ave	6/4/2016	O'Rourke	
041.110	Billboard	1712 Highland Ave	6/4/2016	Billboard	
041.111	Residential	1701 Loch Lomond	NTP2	NDOT (Fannie Mae)	DEMO PKG C - dirt lot
041.137	Street	Oakey	NTP2	Agreement with City of Las Vegas	
041.176	Street/Commercial	S Highland Avenue	NTP2	Agreement with City of Las Vegas	
041.190	Commercial	1601 W Oakey Blvd	6/4/2016	The Southland Corp. (7/11)	
041.190	Billboard	1601 W Oakey Blvd	6/4/2016	Billboard	
041.202	Street/Commercial	W Oakey Blvd	NTP2	Agreement with City of Las Vegas	
041.236	Commercial	1602 W Oakey Blvd	6/4/2016	MVR	
041.236	Billboard	1602 W Oakey Blvd	6/4/2016	MVR Billboard	
041.236	Billboard	1602 W Oakey Blvd	6/4/2016	MVR -Billboard	
041.271	Vacant Land	S MLK	6/15/2016	Marlon Family Trust	
041.324	Commercial	1514 Western Ave	11/15/2016	Grant	
041.324	Billboard	1514 Western Ave	11/15/2016	Grant - Billboard	
041.420	Commercial	1500 Western Ave	11/15/2016	Grant	

Attachment 21-1 DRAFT

Revised 2/23/2015

NDOT PARCEL NO.	TYPE	PHYSICAL ADDRESSS	Delivery Date	Ownership	Demolition Package / Status
041.420	Billboard	1500 Western Ave	11/15/2016	Grant - Billboard	
041.443	Commercial	Western Ave	NTP2	LV GOLF and COUNTRY CLUB & TANG, LLC.	
041.443	Billboard	Western Ave	NTP2	LV GOLF and COUNTRY CLUB & TANG, LLC	
041.454	Residential	1305 Richard Ct	NTP2	NDOT (Dine Trust)	DEMO PKG B - dirt lot
041.455	Residential	1309 Richard Ct	NTP2	NDOT (Gibson)	
041.460	Residential	1301 Richard Ct	NTP2	NDOT (Gaucin)	DEMO PKG B - dirt lot
041.473	Street	Richards Ct	NTP2	Agreement with City of Las Vegas	
041.481	Residential	1225 Richard Ct	NTP2	NDOT (Ziehm)	DEMO PKG B - dirt lot
041.491	Residential	1217 Richard Ct	NTP2	NDOT (Rachiel)	DEMO PKG B - dirt lot
041.500	Vacant Lot	Desert Lane	NTP2	NDOT (Catello)	DEMO PKG C - asphalt lot
041.508	Residential	1221 Richards Ct	NTP2	NDOT (Medina)	DEMO PKG C-1 - dirt lot
041.512	Commercial	1200 S MLK	NTP2	NDOT (Highland 2000)	DEMO PKG C - foundation/asphalt lot
041.523	Residential	1213 Charmast	NTP2	NDOT (Chen)	DEMO PKG B - dirt lot
041.541	Residential	1209 Charmast	NTP2	NDOT (Nelson)	DEMO PKG A - dirt lot
041.543	Commercial	1290 Western	NTP2	LV GOLF and COUNTRY CLUB	
041.543	Commercial	1408 Western	NTP2	LV GOLF and COUNTRY CLUB	
041.543	Commercial	1410 Western	NTP2	LV GOLF and COUNTRY CLUB	
041.543	Commercial	1414 Western	NTP2	LV GOLF and COUNTRY CLUB -	
041.548	Commercial	1230 Western	NTP2	LAS VEGAS GOLF and COUNTRY CLUB	
041.559	Residential	1205 Charmast	NTP2	NDOT (Eiler)	DEMO PKG B - dirt lot
041.560	Misc	319 Wall st	NTP2	NDOT (Wall Street)	
041.560	Billboard	319 Wall st	NTP2	Billboard	
041.570	Residential	1524 Ellis	NTP2	NDOT (Kimrey)	DEMO PKG C - dirt lot
041.573PE, TE1 &2	RR ROW	N/A	3/31/2016	Union Pacific Railroad Company	
041.575	Commercial	415 Wall	NTP2	NDOT (Smith Family Trust)	
041.576	Residential	1520 Ellis	NTP2	NDOT (Key Foundation)	DEMO PKG B - dirt lot
041.616	Commercial	1111 Desert	NTP2	NDOT (Highland 1980)	DEMO PKG C - foundation/asphalt lot
041.616	Commercial	1112 S MLK	NTP2	NDOT (Highland 1980)	DEMO PKG C - foundation/asphalt lot
041.616	Commercial	1117 Desert	NTP2	NDOT (Highland 1980)	DEMO PKG C - foundation/asphalt lot
041.616	Commercial	1124 S MLK	NTP2	NDOT (Highland 1980)	DEMO PKG C - foundation/asphalt lot
041.616	Commercial	1128 S MLK	NTP2	NDOT (Highland 1980)	DEMO PKG C - asphalt lot
041.616	Commercial	1130 S MLK	NTP2	NDOT (Highland 1980)	DEMO PKG C - foundation/asphalt lot
041.664	Commercial	Western Ave	NTP2	NDOT (Refrigeration)	
041.665	Commercial	322 Wall	NTP2	NDOT (Marshall)	DEMO PKG A - foundation/asphalt lot
041.675	Street	Western Ave	NTP2	Agreement with City of Las Vegas	
041.691	Commercial	1115 Western	1/15/2016	NDOT (Zetocka/Lush)	DEMO PKG C-1 - foundation/asphalt lot
041.691	Billboard	1115 Western	1/15/2016	Billboard on P1 Parcel	
041.692	Commercial	307 W. Charleston	NTP2	NDOT (Gendall)	DEMO PKG A - foundation/asphalt lot
041.693	Commercial	301 W. Charleston	NTP2	NDOT (Ellingham)	DEMO PKG A - foundation/asphalt lot
041.704	Commercial	1109 Western	1/15/2016	NDOT (Zetocka/Lush)	DEMO PKG C-1 - foundation/asphalt lot
041.704	Billboard	1109 Western	1/15/2016	Billboard - Lamar TLC Easement	
041.708	Commercial	1501 W Charleston	NTP2	NDOT (Towne)	DEMO PKG B - foundation/asphalt lot

Attachment 21-1 DRAFT

Revised 2/23/2015

NDOT PARCEL NO.	TYPE	PHYSICAL ADDRESSS	Delivery Date	Ownership	Demolition Package / Status
041.708	Commercial	1505 W Charleston	NTP2	NDOT (Towne)	DEMO PKG B - foundation/asphalt lot
041.709	Commercial	305 W. Charleston	NTP2	NDOT (SUH)	DEMO PKG A - foundation/asphalt lot
041.736	Street	Charleston	NTP2	Agreement with City of Las Vegas	
041.752	Street	South MLK	NTP2	NDOT (UPRR)	
041.757	Commercial	1500 W Charleston Blvd	NTP2	NDOT (Herbst)	
041.760	Street/Commercial	Desert Lane & Hastings Ave	NTP2	QUITCLAIM, Agreement with CLV	
041.761	Commercial	1522 W Charleston Blvd	6/15/2016	John Charleston (Carl's Jr.)	
041.766	Vacant Lot	952 W Charleston	NTP2	NDOT (Las Vegas Group)	
041.790	Residential	1031 Desert Lane	NTP2	Tim Weaver LLC	
041.800	Residential	1025 Desert Lane	NTP2	Hawley	
041.801	Residential	1020 Desert Lane	3/31/2016	Peaceful Sundays Trust	
041.811	Residential	1021 Desert Lane	NTP2	Leh	
041.822	Residential	1017 Desert Lane	5/31/2016	ARLT	
041.823	Residential	1016 Desert Lane	3/31/2016	Pinto	
041.833	Residential	1011 Desert Lane	NTP2	Dechavez	
041.834	Residential	1010 Desert Lane	NTP2	Trocio	
041.843	Residential	1007 Desert Lane	3/31/2016	Danisi A	
041.844	Residential	1006 Desert Lane	NTP2	Old Lighthouse LLC	
041.854	Residential	1001 Desert Lane	NTP2	Hawk	
041.855	Residential	1000 Desert Lane	NTP2	Soriano	
041.879	Residential	940 S Martin L King Blvd	NTP2	Fulstone	
041.880	Residential	1508 Hastings Ave	NTP2	NDOT (Hooper)	
041.881	Residential	1512 Hastings Ave	5/31/2016	ARLT	
041.882	Residential	1516 Hastings Ave	NTP2	NDOT (Tanha/Springbok)	
041.883	Residential	1522 Hastings Ave	5/31/2016	ARLT Properties	
041.897	Residential	920 S Martin L King Blvd	6/4/2016	Carroll	
041.898	Street/Commercial	Pinto Lane & Alleys	NTP2	Agreement with City of Las Vegas	
041.901	Residential	921 Desert Lane	6/4/2016	Higher Ground/Store House Homes	
041.912	Residential	911 Desert Lane	6/4/2016	Higher Ground/RRR Homes, LLC	
041.916	Residential	910 S Martin L King Blvd	NTP2	Valdez	
041.923	Residential	901 Desert Lane	NTP2	Castillo	
041.925	Residential	900 S Martin L King Blvd	NTP2	Valdez	
041.935	Residential	800 S Martin L King Blvd	6/4/2016	Ranch	
041.937	Residential	801 Desert Lane	6/4/2016	Ranch Properties	
041.964	Residential	700 S Martin L King Blvd	6/4/2016	Robarts	
041.966	Residential	701 Desert Lane	6/4/2016	Robarts 1981	
041.995	Residential	670 S Martin L King Blvd	6/4/2016	Capri Village	
041.997	Residential	691 Desert Lane	6/4/2016	Deleon	
042.007	Residential	671 Desert Lane	NTP2	Menkel	
042.028	Residential	661 Desert Lane	NTP2	Naito/Chanpaibool	
042.039	Residential	651 Desert Lane	6/4/2016	651 Desert Lane	
042.049	Residential	641 Desert Lane	NTP2	Flush Investments	

Attachment 21-1 DRAFT

Revised 2/23/2015

NDOT PARCEL NO.	TYPE	PHYSICAL ADDRESSS	Delivery Date	Ownership	Demolition Package / Status
042.051	Residential	630 S Martin L King Blvd	NTP2	Suzuki	
042.059	Residential	631 Desert Lane	NTP2	NDOT (AOWREO, LLC)	
042.069	Residential	611 Desert Lane	NTP2	KMT Properties	
042.071	Residential	610 S Martin L King Blvd	NTP2	Menkel	
042.089	Residential	601 Desert Lane	NTP2	Champaneri	
042.092	Residential	600 S Martin L King Blvd	NTP2	All-City	
042.110	Residential	531 Desert Lane	NTP2	NDOT (Santos/Wescom Central Credit U)	
042.112	Residential	550 S Martin L King Blvd	6/4/2016	Reich Series	
042.118	Residential	525 Desert Lane	11/15/2016	Golden Rainbow	
042.134	Vacant Lot	541 S MLK	NTP2	NDOT (Etor)	
042.134	Billboard	541 S MLK	NTP2	Billboard - ACQUIRED	
042.135	Residential	515 Desert Lane	6/4/2016	Desert Alta, LLC	
042.139	Commercial	510 S Martin L King Blvd	6/30/2016	MARTIN RENTALS	
042.179	Commercial	Portion 541 S. mlk	1/15/2016	Clear Channel	
042.179	Billboard	Portion 541 S. mlk	1/15/2016	Billboard	
042.187	Vacant Lot	501 S MLK	NTP2	NDOT (Sanders/Jenkins)	
042.193	Commercial	500 S Martin L King Blvd	6/30/2016	Simon	
042.218	Street/Commercial	Alta Drive & S MLK	NTP2	Agreement with City of Las Vegas	
042.225	Street	Alta Drive & S MLK	3/31/2016	Union Pacific Land Resources Corp QUITCLAIM	
042.225	Street	Alta Drive & S MLK	3/31/2016	Agreement with City of Las Vegas	
042.248	Street	Bonneville Avenue	NTP2	NDOT(UPRR)	
042.263	Commercial	417 S. MLK	NTP2	MLK ALTA	DEMO PKG A - dirt lot
042.263	Commercial	433 S. MLK	NTP2	MLK ALTA	DEMO PKG A - dirt lot
042.301	Commercial	407 S MLK	NTP2	Fitzhouse Enterprises, Inc.	
042.340	Commercial	351 S. MLK	NTP2	NDOT (Storage Equitites)	DEMO PKG A - foundation/asphalt lot
042.340	Billboard	351 S. MLK	NTP2	Billboard	
042.503	Commercial	275 S. MLK	NTP2	NDOT (Public Storage)	DEMO PKG A - foundation/asphalt lot
042.503	Billboard	275 S. MLK	NTP2	Billboard	
042.617	Misc	Symphony Park Avenue	NTP2	MLK Spur LLC	
042.619	Street	Symphony Park Avenue	NTP2	Agreement with City of Las Vegas	
041.112, 041.112TE	Vacant Lot	No address	6/15/2016	Roundy Revocable Family Trust	
041.128, 041.128TE	Residential	1810 W Oakey Blvd	6/15/2016	Georgescu	
041.189, 041.189TE	Vacant Lot	No address	6/15/2016	Su Lisa 2005 Revocable Trust	
041.247, 041.247TE	Vacant Lot	1700 Silver Ave	6/15/2016	Trustee Clark County Treasurer	
041.275, 041.275TE	Vacant Lot	No address	6/15/2016	Trustee Clark County Treasurer	
041.309, 041.309TE	Vacant Lot	1515 S Martin L King Blvd	6/15/2016	Trustee Clark County Treasurer	
041.344, 041.344TE	Public Use	1501 S Martin L King Blvd	NTP2	Agreement with City of Las Vegas	
041.386, 041.386TE	Vacant Lot	1515 Western	NTP2	NDOT (Valdez)	
041.410, 041.410TE	Vacant Lot	1404 S Martin L King Blvd	6/4/2016	Jackson	
041.505, 041.505TE	Vacant Lot	Western Ave	NTP2	Sharples	
041.593TE1, 2 & 3	Church	1515 W Charleston Blvd	5/4/2016	First Presbyterian Church	
041.690TE	misc	N/A	NTP2	Lapour	

Attachment 21-1 DRAFT

Revised 2/23/2015

NDOT PARCEL NO.	TYPE	PHYSICAL ADDRESSS	Delivery Date	Ownership	Demolition Package / Status
041.723TE	misc	N/A	NTP2	Lapour	
041.756, 041.756TE	Public Use /University	1001 Shadow Lane	3/31/2016	Board of Regents (UNLV)	
041.891TE	Residential	926 Desert Ln	6/15/2016	Amalgamated Inv.	
041.904TE	Residential	922 Desert Ln	6/15/2016	Gold Star	
041.955TE	Commercial	Desert Lane	6/4/2016	Clark Co. Health Dept.	
041.993TE	Commercial	Desert Lane	6/4/2016	Desert Lane, LLC (Robarts)	
042.070TE	Commercial	Desert Lane	6/4/2016	Pinto Lane	
042.166TE	Residential	Alta Drive	6/30/2016	Martin Rentals	
042.241, 042.241TE1&2	Commercial	400 S Martin L King Blvd	6/15/2016	HQ Metro LLC	
042.275PE	misc	Bonneville Avenue	NTP2	NDOT (WMCV)	
042.276TE	Commercial	World Market Center Driveway	6/29/2016	World Market Center LLC	
042.395, 042.395TE	Commercial	301 S MLK	1/15/2016	United Landco	
042.437, 042.437TE	Commercial	301 S MLK	1/15/2016	United Warehouse Investments	
042.597TE	Commercial	N/A	6/15/2016	TNP 121 S. Martin Luther King Blvd	
042.709TE, 042.709PE	Commercial	73 S Martin L King Blvd	6/29/2016	MLK Furniture Plaza	

Notes:

1. This is not prioritized list
2. This list is based on NDOT base design construction phasing
3. NTP2= Notice to Proceed 2 which will be the first week of January 2016
4. City of LV Agr - means that this parcel is covered by the Agreement that NDOT has with the City of Las Vegas

DRAFT

This page intentionally left blank.

ATTACHMENT 21-2
CITY OF LAS VEGAS PROJECT ROW ACCESS DATES AND CONSTRAINTS

This page intentionally left blank

Attachment 21-2
CLV Acquisition Schedule - DRAFT

Revised 2/24/2015

CLV PARCEL NO.	APN	NDOT Stationing	TYPE	PHYSICAL ADDRESSS	Delivery Date	Ownership
F1	162-04-606-003	"Le 785+25.70 Rt. To "Le" 787+33.33 Rt.	Commercial	1550 Industrial Road	1/1/2018	Industrial Road Real Est. LLC
TE1	162-04-606-003	"Le 785+14.37 Rt. To "Le" 787+10.21 Rt.	Commercial	1550 Industrial Road	1/1/2018	Industrial Road Real Est. LLC
F2	162-04-606-004	"Le 784+67.76 Rt. To "Le" 785+56.64 Rt.	Commercial	1550 Industrial Road	1/1/2018	Industrial Road Real Est. LLC
TE2	162-04-606-004	"Le 784+56.62 Rt. To "Le" 785+25.70 Rt.	Commercial	1550 Industrial Road	1/1/2018	Industrial Road Real Est. LLC
F3	162-04-606-005	"Le 782+17.04 Rt. To "Le" 784+95.80 Rt.	Commercial	1550 Industrial Road	1/1/2018	Industrial Road Real Est. LLC
TE3	162-04-606-005	"Le 782+32.84 Rt. To "Le" 784+67.76 Rt.	Commercial	1550 Industrial Road	1/1/2018	Industrial Road Real Est. LLC
F4	162-04-608-011	"Le 782+88.75 Rt. To "Le" 783+02.26 Rt.	Commercial	236 W. Wyoming Ave.	1/1/2018	Ramon Steve Kaboli
F5	162-04-609-002	"Le 780+21.99 Rt. To "Le" 783+03.82 Rt.	Commercial	1601 Industrial Road	1/1/2018	Bell Real Estate LLC
TE8	162-04-609-002	"Le 780+28.88 Rt. To "Le" 782+98.70 Rt.	Commercial	1601 Industrial Road	1/1/2018	Bell Real Estate LLC
F6	162-04-609-003	"Le 782+98.70 Rt. To "Le" 783+64.24 Rt.	Commercial	221 W. Wyoming Ave.	1/1/2018	Lexia Kathryn Allen and Tom Allen Trust
TE9	162-04-609-003	"Le 782+87.61 Rt. To "Le" 783+70.07 Rt.	Commercial	221 W. Wyoming Ave.	1/1/2018	Lexia Kathryn Allen and Tom Allen Trust
F7	162-04-609-010	"Le 778+96.13 Rt. To "Le" 780+28.88 Rt.	Commercial	1607 Industrial Road	1/1/2018	Wells Property Management LLC
TE10	162-04-609-010	"Le 778+02.61 Rt. To "Le" 780+30.73 Rt.	Commercial	1607 Industrial Road	1/1/2018	Wells Property Management LLC

Attachment 21-2
CLV Acquisition Schedule - DRAFT

Revised 2/24/2015

CLV PARCEL NO.	APN	NDOT Stationing	TYPE	PHYSICAL ADDRESSS	Delivery Date	Ownership
F8	162-04-507-010	"Le 790+05.61 Rt. To "Le" 791+88.25 Rt.	Commercial	155 W. Imperial Ave.	1/1/2018	Jesus G & Dora N Diaz
TE11	162-04-507-010	"Le 790+55.93 Rt. To "Le" 791+94.44 Rt.	Commercial	155 W. Imperial Ave.	1/1/2018	Jesus G & Dora N Diaz
F9	162-04-606-001	"Le 788+17.62 Rt. To "Le" 790+73.58 Rt.	Commercial	1400 Industrial Road	7/1/2017	Marjorie E. Gleed and Gleed Family LP
F10	162-04-606-002	"Le 786+12.70 Rt. To "Le" 789+03.44 Rt.	Commercial	1414 Industrial Road	1/1/2018	Vazzana Family Trust Ann & Bruce Vazzana Trustees
F11	162-04-607-007	"Le 787+61.06 Rt. To "Le" 789+08.32 Rt.	Commercial	320 W. Utah Ave.	1/1/2018	320 W. Utah Ave. LLC
TE14	162-04-607-007	"Le 787+88.59 Rt. To "Le" 789+53.40 Rt.	Commercial	320 W. Utah Ave.	1/1/2018	320 W. Utah Ave. LLC
TE4	162-04-608-001	"Le 786+25.29 Rt. To "Le" 787+11.53 Rt.	Commercial	331 W. Utah Ave.	1/1/2018	Robin & Michelle Mellor Family Trust Robin S.
TE5	162-04-608-005	"Le 785+25.70 Rt. To "Le" 786+31.12 Rt.	Commercial	1515 Industrial Road	1/1/2018	Mark & Mirna Orchard
TE6	162-04-608-006	"Le 784+64.46 Rt. To "Le" 785+31.53 Rt.	Commercial	1519 Industrial Road	1/1/2018	Ramon Steve Kaboli
TE7	162-04-609-001	"Le 779+66.87 Rt. To "Le" 781+18.04 Rt.	Commercial	1603 Industrial Road	1/1/2018	Gaming Partners Intl USA, Inc.
TE12	162-04-607-002	"Le 790+36.33 Rt. To "Le" 790+66.46 Rt.	Commercial	1405 Industrial Road	1/1/2018	Jesus Gerado & Dora Ninfa Diaz
TE13	162-04-607-004	"Le 790+08.61 Rt. To "Le" 790+38.74 Rt.	Commercial	1407 Industrial Road	1/1/2018	Esther L Edwards Trust Esther L Edwards Trustee
TE15	162-04-607-019	"Le 789+50.67 Rt. To "Le" 790+11.13 Rt.	Commercial	1411 Industrial Road	1/1/2018	Kenneth D. Black
Notes:						

ATTACHMENT 26-1
AMENDMENTS TO THE STANDARD SPECIFICATIONS

This page intentionally left blank.

AMENDMENTS TO THE STANDARD SPECIFICATIONS

General

The 2014 edition of the Department's *Standard Specifications for Road and Bridge Construction* (Standard Specifications) is hereby amended with the additional provisions in this Attachment 26-1.

Amended Standard Specifications

The language in the following sections is hereby incorporated into the Department's Standard Specifications.

SECTION 212 – LANDSCAPE AND AESTHETICS

212.01.01 General. This work consists of painting new concrete surfaces.

212.03.12 Painting. Thirty days prior to beginning paint application, apply paint test sections on approved test panels. The Engineer may require different shades of the colors or variance of shades on the same test panel to make a selection. Prior to test paint application, blast and pressure wash the test panels as specified below. Perform additional surface preparation as recommended by the paint manufacturer. Allow the test panel to fully dry. Apply test paint in accordance with the manufacturer's recommendations using a manufacturer certified applicator. Demonstrate that the paint penetrates the surface and is immediately absorbed. Do not begin application of paints on the project until the paint colors have been approved and application methods demonstrate successful results.

Give notification not less than 72 hours prior to the commencement of application of paint.

Do not paint concrete surfaces until they have cured a minimum of 28 days. Schedule the paint application with earthwork and backfilling operations of any given wall to insure that the walls are treated to the minimum distance below finished grade.

Remove laitance, curing compounds, form release agents and other substances detrimental to the finish coating performance prior to painting with the following steps:

1. Hot water pressure blast.
2. Chemical wash with trisodium phosphate, copper sulfate, or any detergents specially formulated for removal of form release agents, curing compounds and all laitance involved with the construction procedure. Apply with vigorous scrubbing or an approved mechanical method.
3. Hot water pressure blast to remove cleaning agents and remaining laitance.
4. Perform field test as described below.

The above steps are based on early form removal and the necessity for the application of curing compounds. In areas where curing compound has not been applied, hot water pressure blasting accompanied with field testing may be all that is required for complete surface preparation.

Field testing will consist of applying water on a dried section of prepared concrete surface. If any water beading and/or differential absorption into the concrete surface is noted, then perform the above Steps 2 and 3.

Hot water pressure blasting and equipment shall consist of the following:

a) Provide equipment capable of producing between 2000 - 3000 psi when applied at a rate of 3-4 gpm. Vary the blasting pressure until laitance removal is observed. Do not operate pressure so high that etching of the concrete surface occurs. Maintain water temperature between 185 ºF and 200 ºF. Make any adjustments necessary to the satisfaction of the Engineer.

b) Use a fan nozzle that produces a 0 to 15 degree spray pattern.

c) The hot water pressure blasting removal pattern shall provide a clean concrete surface. Hold the nozzle perpendicular and 12-24 inches away from the concrete surface. Overlap each spray pass to obtain maximum removal of laitance. Spray patterns may be up and down or side to side. If the laitance is difficult to remove, both up and down and side to side may be necessary for complete surface preparation.

All surface preparation shall be performed to the satisfaction of the Engineer.

Apply the concrete paint according to the manufacturer's recommendations using a manufacturer certified applicator. Apply paint with the number of coats, and application rates, recommended by the manufacturer.

Apply paint when the ambient and surface temperature is 7 °C (45 °F) and rising. Do not apply paint when temperatures are above 35 °C (95 °F).

Do not apply paint when winds are 8 mph or greater or when there are dusty conditions. Do not apply paint during fog, mist, the relative humidity exceeds 85%, at temperatures less than 5 degrees above the dew point, or when precipitation is imminent.

Provide drop cloths or other forms of protection for surrounding surfaces of overspray and splashing. Protect traffic and pedestrians from overspray.

212.03.14 Aesthetic Patterning.

(a) General. Use prefabricated form liners to provide aesthetic patterning to formed concrete surfaces as shown on the plans.

Prior to fabrication, submit shop drawings for all form work incorporating form liners for approval. The shop drawings shall show the location of construction joints, use of special form liner materials, and type and location of form ties. Include a material list of all form liner types, showing location, including panel size, layout of each panel, form liner joints, seams, and method of attachment. Included in shop drawing and material list shall be any materials used to construct reveals, elevation/relief transitions, edges, and any required special graphic features.

(b) Materials. The form liner manufacturer shall have a minimum of five years experience in manufacturing form liners of equal complexity to this project. Submit proposed form liner material for approval. Provide a 36” x 36” sample of each proposed pattern/texture, including the reverse positive of each, indicating use, location, and attachment method. Include materials that will be used to produce reveals, chamfers, and transitions in relief elevations and textures. Provide evidence that materials have been used successfully on similar projects using construction photos, dates, and names. Submit a minimum of 3 photos demonstrating such patterning.

The form liners shall be able to withstand concrete pour pressure without deflection and distortion and be removable without causing concrete surface deterioration or weakness in the substrate.

Use release agents compatible with form liner surface finish and color system to be applied.

Wood forming or foam form inserts will be allowed.

(c) Installation. Upon approval of form liner materials and shop drawings, construct full size mockup panels using approved form lining materials. Construct panels to provide a sampling of all form liner material types and textures, construction joints, form liner seams, reveals, colors and portions of any special art features. The form liner used shall produce the same pattern that is intended for use on the finished structure and shall be incorporated into final work. The mockup test panels shall be un-reinforced, vertically cast, concrete constructed to determine the surface texture resulting by use of form liners. Panels to be oriented with the aesthetic patterns facing south. Remove unsatisfactory panels and replace with satisfactory panels. Dispose of test panels after completion of finished concrete wall or as directed. Do not begin construction until proposed materials and construction methods indicate satisfactory results.

Securely attach liner to forms per manufacturer’s recommendation. Coordinate wall ties with approved shop drawings.

Apply form release agent per manufacturer's recommendation.

Make free of build-up prior to each pour. Visually inspect each liner for blemishes and/or tears and repair per manufacturer's recommendation.

Form liner seam joints shall be finished and carefully blended into the final concrete surface. Finished texture and pattern shall be continuous without visual disruption.

SECTION 496 - POLYMER CONCRETE

DESCRIPTION

496.01.01 General. This work consists of preparing concrete surfaces and furnishing and placing polymer concrete consisting of a premixed composition of polyester resin binder and dry aggregate.

496.01.02 Submittals. Submit a list of at least 3 previous projects in which polymer concrete has been placed by the Contractor and satisfactory performance has been obtained. The previous projects must have been completed within the last 5 years and have been open to traffic for not less than 1 year. Include in the submittal, location of bridge (state, route, and bridge identifier), product name and manufacturer of each resin, approximate date of project opening to traffic, owner, and contact person with phone number.

MATERIALS

496.02.01 Polymer Concrete. Use a polymer concrete system listed in the QPL. Make no substitutions for the listed polymer concrete system components.

Give notification at least 20 days before placement of the polymer concrete so it can be determined if a sample of the polyester resin will be required.

Aggregate shall conform to one of the following gradation requirements:

	Percent Passing by Mass	
Sieve Size	**Gradation 1**	**Gradation 2**
12.5 mm (1/2 in.)	---	100
9.5 mm (3/8 in.)	100	83-100
4.75 mm (No. 4)	62-85	65-82
2.36 mm (No. 8)	45-67	45-64
1.18 mm (No. 16)	29-50	27-48
600 µm (No. 30)	16-36	12-30
300 µm (No. 50)	5-20	6-17
150 µm (No. 100)	0-7	0-7
75 µm (No. 200)	0-3	0-3

Aggregate retained on the 2.36 mm (No. 8) sieve shall have a maximum of 45 percent fractured faces as determined by Test Method No. Calif. 205. Aggregate passing the 2.36 mm (No. 8) sieve shall consist of natural sand only.

Aggregate absorption shall not exceed 1.0 percent as determined by Test Method No. Calif. 206 and 207.

The moisture content of the aggregate, as determined by Test Method No. Nev. T112 (Method A), shall not exceed 50 percent of the aggregate absorption capacity at the time of mixing with the resin.

The pre-bagged aggregate may be furnished in two or more sizes. The combined proportions of each size shall meet the above requirements.

The promoter/initiator system for the methacrylate resin shall consist of a metal drier and peroxide. If supplied separately from the resin, at no time shall the metal drier be mixed with or

allowed to contact the peroxide directly. Do not store the containers in a manner that will allow leakage or spillage from one material to contact the container or material of the other.

Accompany each shipment of high molecular weight methacrylate resin, polyester styrene resin, promoter and initiator with a Material Safety Data Sheet.

CONSTRUCTION

496.03.01 General. Before placing polymer concrete, furnish the following:

1. Skilled technical service relating to application of materials, including a representative present during the initial placement of polymer concrete.

2. Health and safety training for personnel who are to handle the materials. In addition, provide a soap and water wash station for the workers at the job site.

3. Submit proposed locations of the longitudinal and transverse joints for approval. Do not locate the longitudinal joints in wheel lines.

Mix one or more trial batches of polymer concrete for various percentages of resin binder as directed. The percentage of polyester resin binder to use will be determined from the trial batches.

The materials used in the trial batches shall be the same as those intended for use in the trial overlay. If at any time different materials are to be used, new trial batches will be required.

496.03.02 Trial Batches and Overlay. When the polymer concrete will be used for an overlay application, place one or more trial overlays on a previously constructed concrete base to demonstrate the effectiveness of the proposed mixing, placing, and finishing equipment. Each trial overlay shall be 3.6 meters (12 feet) wide, at least 1.8 meters (6 feet) long, and the same thickness as the overlay to be constructed.

Place trial batches under similar conditions anticipated to be encountered during placement of the permanent overlay.
Remove and dispose of all materials used in the trial batches and overlays, including the concrete base, according to Subsection 107.14.

496.03.03 Bridge Deck Preparation. After removal of any bituminous surfacing and before deck preparation, repair bridge decks as provided for in Subsection 502.03.15. After repairs are complete, scarify the bridge deck by shot blasting. Use of scabblers, milling machines, or sand blasting will be at the discretion of the Engineer. If shot blasting is utilized, use a 75-horsepower (hp) minimum self-propelled machine equipped with vacuum recovery.

The scarifying procedure shall produce a uniform rough texture, removing concrete and exposing the coarse aggregate to a depth not to exceed 6 millimeters (mm) (1/4 inch). The prepared surface shall be sound.

Adequately isolate expansion joints and weakened plane joints before overlaying, or saw them by approved methods within 4 hours after overlay placement. The exact time of sawing will be determined.

Immediately before applying the prime coat, sweep the surface clean with compressed air to remove accumulated dust and loose material.

496.03.04 Concrete Placement. Before applying the prime coat, the concrete area to receive the prime coat shall be dry when tested according to ASTM D4263. The concrete surface temperature shall be between 10 °C (50 °F) and 38 °C (100 °F) during application of the prime coat. Methods proposed to heat or cool the concrete surface shall be subject to approval.

Apply the prime coat to the concrete surface prior to placement of polymer concrete.

Apply the prime coat at an approximate rate of 0.40 L/m^2 (0.09 gal/yd^2). Flood concrete surfaces with the prime coat allowing penetration into the concrete and filling of all cracks. Redistribute the applied prime coat in cracks by squeegees or brooms. The quantity of initiated, promoted resin shall be no more than what is needed to apply a prime coat. A noticeable increase in viscosity prior to placement will be cause for rejection. If the primed surface becomes contaminated, or if there is a failure of the material, clean the contaminated or failed area by abrasive blasting and re-prime. Do not allow traffic on the primed surface.

The surface temperature of the concrete to receive polymer concrete shall be between 10 °C (50 °F) and 38 °C (100 °F).

Mix polymer concrete in mechanically operated mixers. The polyester resin binder in the polymer concrete shall be approximately 12 percent by mass of dry aggregate. The exact rate will be determined. Use a sufficient amount of initiator in the polymer concrete to produce set times between 30 and 120 minutes after placement. Determine set times according to Test Method No. Calif. 551. Accelerators or inhibitors may be required to achieve proper set times and shall be used as recommended by the resin supplier.

Initiate and thoroughly blend the polyester resin binder before introduction of aggregate to the binder. Mix the polymer concrete a minimum of 2 minutes before placing. If directed, reduce mixing time below 2 minutes, or take other corrective action to avoid entrapment of air in the mix.

Place and finish polymer concrete before gelling or within 15 minutes following addition of the initiator, whichever occurs first. Discard polymer concrete not placed within this time.

Use finishing equipment that strikes off the polymer concrete to the established grade, cross section, and nominal depth. Fit finishing equipment with vibrators or other means of consolidating the overlay material. Construct longitudinal joints parallel to the roadway alignment. Construct vertical joints perpendicular to the deck surface. Saw cut vertical joints not perpendicular to the deck surface.

Apply abrasive sand finish to polymer concrete surfaces which will not be covered with a plantmix bituminous overlay. The sand shall be commercial quality blast sand, conforming to the absorption capacity and moisture content requirements of polymer concrete aggregate specified herein. Provide sand such that 95 percent shall pass the 2.36 mm (No. 8) sieve, and 95 percent shall be retained on the 850 µm (No. 20) sieve. Apply the sand finish by mechanical means immediately after overlay strike-off. Broadcast sand uniformly onto the surface before gelling occurs at a minimum rate of 0.8 kg/m^2 (1.5 lb/yd^2).

Protect the finished polymer concrete overlay from moisture, equipment, and public traffic for not less than 4 hours after finishing.

Do not contaminate concrete surfaces during clean-up of tools and equipment. Do not dump or spill polymer concrete materials or cleaning solvents in areas that will cause environmental or fire hazards.

Provide the necessary equipment and supplies for conducting pull off tests on the completed polymer concrete overlay. Perform pull off tests according to ACI 503R - Appendix A of the ACI Manual of Concrete Practice. Pull off test shall exhibit cohesive failure within existing concrete. Pull off tests shall obtain a 1725 kPa (250 psi) minimum pull off. Perform tests at a frequency of one test per every 50 m^2 (60 yd^2) of deck surface. Prime and patch test holes with polymer concrete immediately after testing.

Where the polymer concrete is not to be covered with a plantmix overlay and will be the wearing surface, the finished surface shall be uniform, shall have a Skid Number (SN) of not less than 55, and shall conform to Subsection 502.03.16. Test the finished surface of the polymer concrete for the specified SN according to ASTM E274. Grind or groove, parallel to the centerline, any portions of surfaces that do not meet the above requirements according to Subsection 502.03.16 until the finished surface requirements are met.

Where the polymer concrete is to be covered by a plantmix bituminous overlay, the surface of the concrete shall not vary more than 7.5 mm (0.3 in.) from the lower edge of a 3.6 m (12 ft) straightedge laid in any direction. Remove all high areas in the hardened surface to within specified tolerances as indicated. Correct all high areas in the plantmix bituminous surface according to Subsection 402.03.05 and 403.03.04 to meet the aforementioned surface tolerances. Perform removal by abrasive means.

After any required grinding by abrasive means has been performed, the surface of the concrete shall not be smooth or polished but shall have a satisfactory surface texture. Produce ground areas of uniform texture and of neat and approximately rectangular patterns which extend laterally to the nearest lane line and longitudinally so that the grinding begins and ends at lines normal to the centerline.

SECTION 497 - THIN BONDED MULTILAYER OVERLAY

DESCRIPTION

497.01.01 General. This work consists of preparing concrete surfaces and furnishing and placing a thin bonded multilayer overlay consisting of multiple layers of a polymer resin binder and broadcast dry aggregate.

MATERIALS

497.02.01 General. Use one of the following thin bonded multi-layer resins with the aggregate combinations listed below:

Poly-Carb, Inc.
Product, Poly-carb Mark 163 Flexogrid
Mr. Ruolei Wang
33095 Bainbridge Rd.
Solon, Ohio 44139
Email: rwang2@dow.com
Phone: (800) 225-5649
Phone: (440) 914-3038

E-Bond Epoxies, Inc.
Product, E-Bond 526 (Bridge Bond 34 - private label version)
Mr. Steve Frank
3491 Old Cobble Court
San Diego, California 92111
Email: Stevepolymerdek@aol.com
Phone: (858) 571-5043
Phone: (858) 442-8185

Unitex By Dayton Superior
Product, Pro-Poxy Type III D.O.T.
Mr. David Minor
3101 Gardner Ave.
Kansas City, Missouri 64120
Email: davidminor@daytonsuperior.com
Phone: (800) 821-5846
Phone: (970) 286-9229

The combined aggregate shall consist of 50% calcined bauxite and 50% steel slag by mass.

The calcined bauxite aggregate shall be from one of the following distributors or an approved equal:

Newport Industries Ltd
Calcined Bauxite
Mr. Mark C. Isaacs
3rd Floor Merlin House
20 Belmont Terrace
Chiswick, London W4 5UG
Phone: (919) 522-8113

Great Lakes Minerals, LLC
Paul Ormond
1200 Port Road
Wurtland, Kentucky 41144
Email: paulormond@glmin.com
Phone: (606) 585-4327

The calcined bauxite aggregate shall conform to ASTM D5711-03 and not exceed 1.0%, and shall conform to the following gradation:

Sieve Size	Percent Passing by Mass
No. 4	100
No. 8	30-75
No. 16	0-5
No. 30	0-1
No. 200	0-0.2

The steel slag shall be from one of the following distributors or an approved equal:

Earthwork Solution LLC Mr. Patrick Malfitano 5595 East Bijou Street Colorado Springs, Colorado 80916 Email: Patrick@ewslag.com Phone: (719) 492-0706	Harsco Metals Norm Whinery PO Box 247 Armorel, AR 72310 Email: NWhinery@harsco.com Phone: (870) 763-6506	Schmidt Construction Tom Blair 51445 West Twelve Mile Road Wixom, Michigan 48393 Email: tblair@edwclevy.net Phone: (248) 675-0103

The steel slag shall conform to the same gradation specified above for calcined bauxite.

CONSTRUCTION

497.03.01 General. Before placing the overlay, have the resin supplier furnish the following:

1. A technical representative to provide on-site training to contractor personnel on equipment and procedures for preparing concrete surfaces and placing the thin bonded multilayer overlay. The technical representative shall be present for the initial application of the overlay. As directed, the technical representative shall also be present for subsequent applications of the overlay.

2. A letter from the resin manufacturer denoting the specific contractor personnel that the technical representative has provided job specific training to and is deemed qualified to supervise installation of the overlay.

3. Health and safety training for personnel who are to handle the materials.

Provide shielding or tenting to protect public traffic from bridge deck preparation and overlay placement operations. Protect existing expansion joints, relief joints, and adjacent surfaces.

497.03.02 Bridge Deck Preparation. After removal of any bituminous surfacing and prior to deck preparation, repair decks and approach slabs according to Subsection 502.03.15. After repairs are complete, scarify concrete surfaces by shot blasting using a 75 hp minimum self-propelled machine equipped with vacuum recovery. Do not use shot blasting equipment that causes ravels, aggregate fractures, spalls, or disturbance of joints. The scarifying procedure shall produce a uniform rough texture, removing concrete and exposing the coarse aggregate to a depth not to exceed 1/4 inch. The prepared surface shall be sound.

As necessary, use multiple passes of shot blasting equipment to completely remove pavement marking materials until they are no longer visible.

Complete the deck preparation by following all of the resin manufacturer's surface preparation recommendations.

Immediately prior to the first application of the overlay resin, clean prepared surfaces with oil-free compressed air or by air vacuuming. Do not permit public traffic or nonessential construction traffic on surfaces readied for overlay placement.

497.03.03 Overlay Placement. Follow all recommendations of the resin manufacturer for placement and curing of the thin bonded multilayer overlay system. Conform to the resin,

surface, and ambient temperature limitations indicated in the resin manufacturer's published product data sheets.

Submit for approval proposed methods to heat or cool overlay materials and concrete surfaces.

Use special equipment capable of metering, mixing, and distributing the resin. Distribute resin to the bridge deck in a continuous, uninterrupted operation such that unanticipated cold joints are not introduced. Use machinery that is approved by the manufacturer. Use an application machine that features positive displacement volumetric metering pumps controlled by a hydraulic power unit. Use motionless, in-line mixing so as to not overly shear the material or entrap air in the mix. Maximize material working time by mixing it immediately before dispensing.

Use truck-mounted equipment capable of dispensing the aggregate onto the deck in a uniform manner as directed or approved by the manufacturer. Broadcast the aggregate to cover the surface so that no wet spots appear and before the resin begins to gel. Drop the aggregate vertically so the level of the liquid is not disturbed. Ensure that the aggregate is broadcast within the time limits provided by the manufacturer according to the current ambient temperatures.

Remove excess aggregate between lifts and from the final cured overlay by air vacuuming or other approved means. Remove loose aggregate from expansion joints, relief joints, and deck drains.

SECTION 501 - PORTLAND CEMENT CONCRETE

501.02.01 General. Class S and SA concrete may be substituted for selected applications for Classes A, AA, D, DA, PAA, Modified A, AA, Modified D, DA, as approved by the Engineer. When the option of Class S or SA concrete is approved, submit details of a representative test section (mockup) for approval. Produce a trial batch of Class S and SA concrete, conforming to the proposed mix design. Place a test section when the atmospheric conditions approximate the conditions anticipated for placing the final work. Finish and cure the mockup according to this Section. If it is determined that the trial batch is not workable or not able to be properly placed or finished, modify the mix design or batching sequence. Submit the revised mix design and batching sequence and place another test section. Repeat the submittal and trial pour process until a workable and finished trial batch is produced. Do not place Class S or SA concrete until the mockup pour has been accepted.

Prepare a Concrete Quality Control Plan (CQCP) that addresses the production, informational quality control testing, transport, contingency plans for equipment breakdown or inclement weather, placement, finish, and cure of Portland cement for foundations, abutments, superstructures, decks, drainage structures, pavement and all other pours over 100 cubic yards. The submittal of a quality control plan, revisions, and weekly reports shall be considered as a necessary portion of the work; therefore, partial payments or portions thereof, as set forth under Subsection 109.06 may not be forthcoming until this requirement is complied with. Submit a weekly report each Monday whenever there was testing or inspections performed in the previous week. Include all necessary test results and inspection reports in the weekly report.

Submit the CQCP 20 working days before the start of work. The quality control plan shall include a specific description for concrete placement in foundations, abutments,

superstructures, decks, drainage structures, pavement and all other pours over 100 cubic yards. The quality control plan shall include the Department's pre-pour agenda information with a pre-pour inspection checklist form for each major structural pour. Do not proceed with major concrete work until the quality control plan has been submitted and approved. Approval of the CQCP does not imply any warranty by the Department that the plan will result in consistent contract compliance. Be responsible to demonstrate such compliance. Deviations from the plan shall be approved in writing. Failure to comply with the quality control plan may result in work suspension.

The CQCP shall include identification of sources and producers of all components used in the mix, aggregate production, informational quality control testing, delivery, placement, finish, and curing equipment and methods. Include personnel and their specific duties. Describe procedures to be followed in preparation of the pour, the event of equipment breakdown or inclement weather during placement, finishing, and curing. When pumping concrete for major structural pours, include, as part of the CQCP, a detailed plan addressing corrective measures to be taken to ensure in-place concrete properties meet the specified requirements. Curing procedures shall include when and how the concrete and the curing system are to be placed, frequency for monitoring, maintaining, and re-wetting the curing system. Include methods of protecting the covers from displacement from wind or weather, and method of preventing heat and moisture loss. In addition, describe the method to be used to protect pedestrian and vehicular traffic under structures.

Designate a quality control supervisor who shall be responsible for the preparation, submittal, implementation, and oversight of the quality control plan. The quality control supervisor shall be an employee of the Contractor, under the direct supervision of the superintendent, solely dedicated to the Contract and shall not be responsible for other day-to-day operations on the project. The quality control supervisor shall have the authority to stop any and all work outlined in the quality control plan if the work is not properly performed. The quality control supervisor shall be available for contact 24 hours a day during the placement and cure of any concrete. The quality control supervisor shall be capable of being on-site within 45 minutes of notification.

The quality control supervisor shall perform and document a pre-pour inspection 24 hours prior to the pour and at least 4 concrete inspections the day of the pour. The inspections shall be made before placement, during placement, when curing begins, and during curing. Inspect concrete forms, reinforcing steel adequately tied and supported, concrete quality control testing reports, fogging, and curing process and equipment. Submit a completed pre-pour inspection checklist 24 hours prior to each major structural pour. Include these quality control inspection reports in the weekly report and provide them within 24 hours of end of concrete placement, if requested.

The quality control supervisor shall also perform and document at least 6 daily cure inspections during the required cure period for each bridge deck pour, at a maximum of 4 hours between inspections. The inspections shall be made at the beginning of primary shift, at approximate time of high temperature, at approximate time of low temperature, and at the end of primary shift. Prepare a daily inspection report which includes date and time of inspection, weather conditions, locations of bridge deck where curing was checked (at least 3 representative locations), moisture condition of deck and burlap, surface temperature of deck concrete, and condition of curing equipment. Include the daily cure inspection reports in the weekly report and provide them within 24 hours, if requested.

The CQCP shall include performance of informational quality control testing by contractor personnel. Furnish personnel, laboratory, equipment, and materials needed to perform the required tests. Personnel, including the Quality Control Supervisor, shall require qualification as Western Alliance for Quality Transportation Construction (WAQTC) or Nevada Alliance for Quality Transportation Construction (NAQTC), as well as qualification as ACI Field Testing Certification, Grade I. Include test results in the weekly report and provide them within 24 hours of completion of each concrete pour, if requested. Material that does not meet contract requirements shall not be incorporated into the work. The quality control testing and required frequencies are as follows:

CONCRETE AGGREGATES		
Test	**Test Method**	**Minimum Sample Frequency**
Moisture Content	Nev. T112	One per 100 yd^3 or fraction thereof
Sieve Analysis	Nev. T206	One per 300 yd^3 or fraction thereof
Sand Equivalent	Nev. T227	One per 300 yd^3 or fraction thereof
Cleanness Value	Nev. T228	One per 300 yd^3 or fraction thereof
Specific Gravity and Absorption (Coarse)	Nev. T492	One per 500 yd^3 or fraction thereof
Specific Gravity and Absorption (Fine)	Nev. T493	One per 500 yd^3 or fraction thereof

PORTLAND CEMENT CONCRETE (Except Class S and SA)		
Test	**Test Method**	**Minimum Sample Frequency**
Air Content	Nev. T431	One per 50 yd^3 or fraction thereof
Unit Weight	Nev. T435	One per 50 yd^3 or fraction thereof
Slump	Nev. T438	One per 50 yd^3 or fraction thereof

CLASS S AND SA CONCRETE		
Test	**Test Method**	**Minimum Sample Frequency**
Slump Flow	Nev. T417	One per 50 yd^3 or fraction thereof
Visual Stability Index	Nev. T417	One per 50 yd^3 or fraction thereof
J-Ring	Nev. T418	One per 50 yd^3 or fraction thereof
Unit Weight	Nev. T416	One per 50 yd^3 or fraction thereof
Air Content	Nev. T416	One per 50 yd^3 or fraction thereof

Sample concrete aggregates from each stockpile to be used in pour in accordance with Test Method No. Nev. T200.

Sample Portland cement concrete in accordance with Test Method No. Nev. T425.

Sample and perform all tests for Class S and SA concrete within the first two trucks for the first sample frequency.

501.02.04 Admixtures. Class S and SA concrete admixture systems shall conform to AASHTO M194 (ASTM C494) Type F or Type G, or ASTM C 1017 requirements.

Include viscosity modifying admixtures (VMA) in the mix design. The mix design shall outline the dosage rate in oz/cwt. VMA's shall conform to ASTM C494, Type S. Adjust the dosage rate within the manufacturer's recommended range in order to obtain the desired flow and segregation characteristics while maintaining the required VSI.

501.02.05 Concrete Making Properties. Add the following to the table on the top of page 209 of the Standard Specifications:

Static Modulus of Elasticity and Poisson's Ratio of Concrete in Compression ... ASTM C469
Permeability ..... ASTM C1202

For Class S and SA concrete, the unit weight, air content, and compressive strength will be tested according to Test Method No. Nev. T416.

Concrete used in bridge decks, approach slabs, and bridge deck rail shall have a maximum permeability of 2000 Coulombs at 56 days.

The requirement for Static Modulus of Elasticity and Poisson's Ratio of Concrete in Compression will be specified on the plans.

In addition to meeting the requirements of this Subsection, Class S and SA concrete shall meet the additional following requirements:

TEST	TEST DESIGNATION	REQUIREMENTS
Slump Flow	Nev. T417	(a)
J-Ring	Nev. T418	(b)
Column Static Segregation	Nev. T420	Segregation Index 10% Max.

(a) The slump flow shall be a single value between 18 and 28 inches and shall be shown on the mix design. The slump flow of the tested concrete shall be within ± 2 inches of the value specified on the mix design. The maximum Visual Stability Index shall not exceed 1.
(b) The difference in slump flow values between Test Method No. Nev. T417 and Test Method No. Nev. T418 shall not exceed 2 inches.

Add the following to item “9.” in the first paragraph on page 210 of the Standard Specifications:

Not applicable for Class S and SA concrete, except for extended time slump requirements for concrete used in drilled shafts as specified in Subsection 509.02.01.

Add the following to the first paragraph on page 210 of the Standard Specifications:

22. The permeability of concrete (if required).
23. The modulus of elasticity of concrete (if required).

For Class S and SA concrete, add the following to the first paragraph on page 210 of the Standard Specifications:

24. The slump flow, visual stability index, j-ring measurement, and column static segregation index.

501.03.01 Equipment. For Class S and SA concrete, internal rodding or vibrating shall not be performed without prior approval.

501.03.06 Mixing. Prevent cement balling (intermittent clumping) and mix foaming by controlling the batch sequence, mixing speed, and mixing time.

Segregated concrete, as determined by Test Method No. Nev. T417 or Test Method No. Nev. T418, shall not be incorporated into any component of the concrete work.

For Class S and SA concrete, when delivering the concrete to the work site, completely discharge each delivery truck within 60 minutes. The discharge time can be extended to 90 minutes for drilled shafts. In hot weather, or under conditions contributing to quick stiffening of the concrete, a delivery time of less than 60 minutes may be required. The Contractor may propose delivery time exceeding 60 minutes if they can demonstrate during a trial pour that all required fresh concrete properties are maintained for the maximum proposed delivery time. The trial pour shall be completed in similar weather conditions to the anticipated placement conditions.

For Class S and SA concrete, completely discharge each delivery truck within 20 minutes. Place the concrete in continuous layers. When it is necessary by reason of emergency or other delay to place less than a complete horizontal layer in one operation, terminate the layer by using a vertical bulkhead. Do not rod or vibrate the concrete to attempt to restore the fluidity to the mix.

501.03.10 Trial Slab and Process Control Testing. If silica fume is used in bridge deck concrete, construct a trial slab at least 30 days prior to placement of concrete on a bridge deck. Submit a written plan for the casting of the trial slab. The written plan shall include, but is not limited to, the location of the slab, the equipment and personnel used for construction, and disposal of the slab. Prior to placement of the trial slab, conduct a pre-construction conference.

Use approved mix designs. Place concrete at a location other than the bridge deck, but under conditions similar to those that exist during bridge deck concrete placement. The trial slab shall have a minimum length and width of 50 feet and have a depth of 8 inches. Reinforce slab with a top and bottom mat of # 5 bars spaced 6 inches longitudinally and transversely. Place top mat at a depth 2.5 inches from the top of the slab. Place bottom mat at a depth 1.5 inches from the bottom of the slab. The trial slab shall be wet-cured as specified for bridge decks according to Subsection 501.03.08. Use personnel such as the superintendent, key operators, and finishers that are the same personnel who will be involved in the construction of the bridge deck. Demonstrate the use of equipment, proficiency of personnel, and techniques for mixing, transporting, placing, and curing of the concrete during the trial. Fifteen days after placement of the trial slab, conduct a post construction critique of the trial slab placement.

Do not commence placement of the bridge deck concrete until after issues from the post construction critique of trial slab construction have been resolved to the satisfaction of the Engineer.
Upon notification, remove and dispose of trial slabs according to Subsection 107.14.

SECTION 502 - CONCRETE STRUCTURES

502.03.23 Portable Precast Concrete Barrier Rail. Paint portable precast concrete barrier rail white with paint conforming to Subsection 714.03.03.

SECTION 506 - STEEL STRUCTURES

506.01.01 General. This work also consists of furnishing and installing approach slab restrainer units.

506.02.01 General. The approach slab restrainer units are shown in their entirety in the details shown on the plans. The items that make up the restrainer units are shown on the above-mentioned details and shall conform to the specifications shown on the plans.

506.03.28 Restrainer Units. Install the restrainer units in the structures according to the details shown on the plans.

This page intentionally left blank.

ATTACHMENT 26-2
CITY OF LAS VEGAS SPECIAL PROVISIONS

This page intentionally left blank.

Hansen Number 56966

SPECIAL PROVISIONS

MARCH 2015

PROJECT NEON DESIGN BUILD

PREPARED BY:

CITY OF LAS VEGAS

TABLE OF CONTENTS

SECTION	TITLE
SECTION 622 – CONSTRUCTION SURVEYING BY THE CONTRACTOR	
SECTION 623 – TRAFFIC SIGNALS AND STREET LIGHTING	
SECTION 628 – TRAFFIC STRIPING, PAVEMENT MARKINGS, AND CURB MARKINGS	
SECTION 630 – SANITARY SEWERS	
SECTION 699 – SITE FURNISHINGS	
SECTION 328000 – IRRIGATION	

ADD THE FOLLOWING SECTION TO DIVISION II – CONSTRUCTION DETAILS

SECTION 622 – CONSTRUCTION SURVEYING BY THE CONTRACTOR

DESCRIPTION

622.01.01 GENERAL

A. The Contractor shall, under supervision of a Professional Land Surveyor, registered in the state of Nevada, furnish and set construction stakes establishing locations, lines, and slope stakes for roadway, storm drain, drainage structures, sewer, laterals, and for all other improvements for project necessary to ensure conformance of work to lines, elevations, locations, and grades as shown on the Plans and in these Special Provisions. Any horizontal or vertical discrepancies shall be reported to Engineer prior to commencement of construction. Any revisions or changes approved by Engineer that affect lines, grades, elevations or locations of any improvement shall be indicated on As-Built (Record) Drawings.

B. If necessary, the Contractor shall also perform and provide to the Engineer those items described in subsection 203.04.01 of the USS. Any revisions or changes approved by the Engineer that affect the lines, grades, elevations or locations of any improvement shall be indicated on the As-Built (Record) Drawings.

C. Contractor shall preserve property line and corner survey points. If their destruction is determined by Engineer to be unavoidable, and their replacement is not called for on the plans, Owner shall replace or pay for their replacement under this contract as determined by Engineer. Markers that are disturbed or destroyed by Contractor's operations without prior approval by the Engineer shall be replaced by Contractor at no additional cost to the Owner. Replacement shall be done only by a Nevada Professional Land Surveyor and in accordance with the USS. A monument tie sheet for replacement of permanent survey monuments shall be submitted to Engineer for approval.

D. When a permanent survey marker and/or monument is located within the construction area of any roadway, storm drain, drainage structures, sewer line or channel improvement, the Contractor shall adjust the cover or replace the monument as noted on the plans. The cost of replacement or adjustment of said monuments shall be included in the lump sum bid for Construction Survey. If monuments are to be installed as part of the work, they shall be placed in accordance with the USD numbers 239 through 243 and Section 621 of the USS.

E. The Contractor shall, under the supervision of a Professional Land Surveyor, prepare and provide GPS location and mapping of as-built conditions for all proposed sanitary sewer and storm drainage facilities as described on the Project Drawings and in this Section.

MATERIALS

622.02.01 BLANK

CONSTRUCTION

622.03.01 GENERAL

A. Prior to all work in this section, the Contractor shall carefully inspect all installed work and verify that all such work is complete to a point where this installation may properly commence.

B. The Contractor shall verify that all work can be installed in accordance with all pertinent codes and regulations, Contract Drawings and referenced standards.

C. The Contractor shall verify that there are no conflicts with existing utilities prior to the start of work.

D. In event of a discrepancy, the Contractor shall immediately notify the Engineer in writing.

E. Installation of work in areas of discrepancy shall not proceed until all such discrepancies have been fully resolved.

F. After stakes and marks have been set, it shall be the responsibility of the Contractor to protect the stakes and marks. Should any of the stakes or marks be destroyed or disturbed by the Contractor's operations or otherwise, the costs of replacing said stakes or marks shall be paid by the Contractor.

G. The Engineer, at his discretion, may periodically have survey work performed to verify conformance to the construction plans. Any nonconformity found to be the fault of the Contractor, or the Professional Land Surveyor, shall be corrected at no additional cost to the Owner.

H. Upon completion of the project and as a condition for final payment authorization, the Contractor shall furnish to the Engineer a Record of Survey/monument tie map and a certification attested to by the Professional Land Surveyor that the work performed for this contract has been constructed to the lines and grades as described in the As-built (Record) Drawings. When requested, the Contractor shall also provide the Engineer with copies of all field notes, computations, and other related work performed by the Professional Land Surveyor.

622.03.02 FINAL ACCURACY

A. Surface Drainage Structures (including all concrete or asphalt gutters and drains) shall be installed within 0.05 feet horizontally and 0.05 feet vertically from the location taken from the project plans, and shall not vary more than 10 percent of the gradient shown on the plans.

B. Monument Cases and Brass Caps shall be centered to within 0.01 feet horizontally of the position as called for on the plans, and the ties to that monument.

C. Sanitary and Storm Drainage Sewer Systems shall be installed within 0.05 feet horizontally and 0.05 feet vertically of the exact location taken from the project plans. In addition, the gradient of any 10-foot section of pipe shall not vary by more than 10 percent of the gradient shown the project plans

622.03.03 INSTALLED/EXPOSED UTILITY SURVEYING

A. After construction of the approved plans and before backfilling, survey shall be conducted indicating the size, horizontal and vertical location, and configuration of any utility constructed with this project or utility exposed during construction, and utility encasement if applicable. Utility final location information shall be described by coordinates which shall be based on the official horizontal and vertical control networks of the City of Las Vegas and be certified by a Nevada professional land surveyor to have positional certainties within +/- 0.3-ft.

B. Survey measurements for utilities constructed or exposed during the course of construction including but not limited to pipes, manholes, drop inlets, conduits, cables, encasements, boxes, vaults and appurtenances shall be located to the extent possible within the excavation area. Measurements shall be taken at a minimum of 100-ft intervals, at all exposed angle points, deflections of the utility exceeding +/- 0.5-ft, at all exposed points that enter/exit the excavation or the public right-of-way, and sufficient measurements to accurately define curving layout.

C. Potholes performed by the contractor prior to or during construction shall be surveyed indicating the size, location, burial depth, and configuration of the utility. Pothole location information shall be tied to the official horizontal and vertical control networks of the City of Las Vegas and be certified by a Nevada professional land surveyor.

D. Utility final location information shall be submitted on paper and in electronic form, on a form specified by the City Surveyor.

E. Interim survey progress reports shall be submitted to the Engineer certifying sufficient survey measurements have been performed prior to backfilling as required by this section on a weekly basis or as directed.

SECTION 623

TRAFFIC SIGNALS AND STREET LIGHTING

DESCRIPTION

623 G.01.01 GENERAL

ADD THE FOLLOWING PARAGRAPHS TO THIS SUBSECTION:

I. The Contractor shall provide all labor, materials, equipment, transportation and services required to install the street lighting, traffic control system, and related items on the plans and in the specifications resulting in complete and operational systems, to include fully functional opticom, video detection, pedestrian detection, and loop detection system complete with the manufacturer's latest versions of firmware.

J. All equipment shall function as designed. All lighting standards shall be fully operational within fifteen (15) days after installation. The luminaries shall be leveled before they are energized.

K. The Contractor shall maintain the new lighting system and traffic signal system from the date energized until the entire project has been accepted by the City of Las Vegas. The Contractor shall repair or replace any defective component of the systems within 24 hours after notice in writing by the Engineer if of a non-hazardous nature. If public safety is endangered, the Contractor shall take immediate steps to correct the problem after verbal notice by the Engineer.

L. The contractor shall have a lighting representative present at the time the City inspects the street lighting installations.

MATERIALS

623 G.02.04 CONDUCTORS AND CABLE

DELETE PARAGRAPH "A.4" AND REPLACE WITH THE FOLLOWING:

A. 4. Electrical cable for traffic signals shall be IMSA 20-1 approved signal cable of proper size for the required installation unless otherwise specified in the Contract Documents. All traffic signal cable shall be 25-conductor, No. 14 AWG solid copper wire traffic signal cable or as specified in the Contract Documents or directed by the Engineer.

CONSTRUCTION

623 G.03.01 MAINTENANCE OF EXISTING AND TEMPORARY ELECTRICAL SYSTEMS

ADD THE FOLLOWING TO PARAGRAPH "H" OF THIS SUBSECTION:

Prior to start of work, Contractor shall submit drawings stamped by a Nevada Professional Engineer showing support of facilities covered by Section 623 for approval by City Traffic Engineer

for all trenches that will expose greater than eight feet of conduit. The Contractor shall submit the support system to be used for all trenches exposing up to 8 feet of conduit for approval prior to trenching. Conduit support systems, at a minimum shall support all joints in the conduit, prevent the decoupling of joints, and prevent deflection greater than 6 inches.

Some signalized intersections may require temporary signalization in lieu of support.

ADD THE FOLLOWING PARAGRAPHS TO THIS SUBSECTION:

J. All equipment and materials shall be as manufactured or modified by the manufacturer and installed by the Contractor in the manner for which it was designed and intended. No equipment may be modified by the Contractor unless prior written permission is provided by the Engineer.

K. Existing service shall remain fully operational during construction. Outages required shall be scheduled with the Owner and timing devices reset after resumption of service. The Contractor shall field verify wiring connections and routing prior to disconnecting any conductors. The modification, extension or removal of the existing conductors and equipment shall be inspected by and accepted by the Engineer. Electrical work shall be in accordance with the requirements of the National Electrical Code.

L. The data indicated on the plans and in these specifications is as exact as could be secured, but its absolute accuracy is not guaranteed. Exact locations, distances, levels, and other conditions will be governed by unforeseen obstacles in the field.

M. The Contractor shall use the plans and these specifications for guidance, and secure the Engineer's approval for all changes of location or scope of work. The Engineer should be consulted regarding the exact locations of pullboxes, poles and cabinets for the traffic signal system.

N. Once the Contractor commences work on the Project, the Contractor shall provide all maintenance for existing traffic signal facilities that are to be modified or replaced, except that the City will pay for power. The Contractor shall provide the above maintenance until the City gives written notice that the City accepts signals back for maintenance at the end of the Project. The above maintenance does not include any prior damage such as burned out signal displays, non-operative detection, or other malfunctioning equipment. The Contractor shall provide written documentation of all non-functioning and malfunctioning traffic signal equipment before commencing work on the project. This malfunctioning equipment shall be inspected by both the Contractor and the Engineer, or Engineer's Designee, prior to the commencement of work. In the event that the Engineer does not receive written notice and the Contractor begins work on the project, this will suffice as evidence that all equipment is functional and operational. If any traffic signal equipment fails or malfunctions during the course of the Project, the Contractor shall repair or replace traffic signal facilities as necessary to provide a fully functioning system before final acceptance for maintenance by the City. For traffic signals, repair work by qualified electricians shall commence within one hour of notification via the Contractor's 24-hour emergency response phone number, at which time the Contractor will have two hours to correct the noted violation. The City will program for the Traffic Signal Controller and the Malfunction Management Unit (MMU).

1. If the repair is not completed within the two-hour time limit, the **Contractor will be assessed $200.00 per hour until the repair is complete.**
2. This condition may cause the Project to "Stop Work"; this will not be grounds for a time extension of the contract.

623 G.03.05 EXCAVATION AND BACKFILLING

ADD THE FOLLOWING PARAGRAPHS TO THIS SUBSECTION:

M. All trenching and backfill shall comply with applicable portions of the USS, USD and plans. All trenching shall be deep enough to insure a minimum of twenty four inches (24") of cover over the conduit measured from the top of conduit to finish grade, *with the exception* of interconnect conduit which shall have a minimum of thirty inches (30") of cover over the conduit. The backfill in street areas shall be Type II gravel compacted to 95% relative density or controlled low strength material (CLSM) Fill. No trench shall be left open after established working hours without approval of the Engineer.

N. Conduit locations on the plans are for reference only. Actual locations are to be determined by the Contractor as to the most economical location --either behind the curb or in front of the lip of the gutter--but in either case, the conduit must remain parallel to the back of curb or the edge of pavement between the lighting standards, and the location shall be approved by the Engineer. "As Built" marked prints showing installed locations shall be given to the Engineer by the Contractor.

O. All conduit that is terminated, stubbed and capped for future use shall be marked by a "+" a minimum of 3 inches high and directly above the conduit, cut into the face of the curb, wall, concrete paving, etc.

623 G.03.07 FOUNDATIONS

ADD THE FOLLOWING PARAGRAPHS TO THIS SUBSECTION:

B. 3. Crash caps above foundations shall be sloped away from poles. All traffic signal poles shall be plumb AFTER the signal heads are in place. Any leveling shall be made before the grout cap is poured over the foundations.

C. 6. Foundations shall be excavated without disturbing surrounding material. All loose material shall be removed before concrete is placed into the opening. Foundations shall not be over-excavated.

623 G.03.08 WIRING AND CONDUIT

ADD THE FOLLOWING PARAGRAPHS TO "E" OF THIS SUBSECTION:

1. Chair lugs shall be used for termination of solid conductors.

2. Solid conductors shall not be terminated with crimp-on connections.

ADD THE FOLLOWING PARAGRAPH TO THIS SUBSECTION:

V. When new conduit is to be joined to existing conduit, the Contractor shall verify the integrity of the existing conduit and make necessary repairs. The Engineer shall approve any additional repair work prior to commencing.

623 G.03.09 ELECTRICAL SERVICE

ADD THE FOLLOWING PARAGRAPHS TO "A" OF THIS SUBSECTION:

Each service provided by the Contractor shall have a 200 amp rating for traffic signal system, streetlight circuits, or combined services.

Services shall be 200 amp pad mount (unless otherwise noted in the plans) and shall be equipped with one 60 amp single pole breaker for the signal and one 40 amp single pole breaker for the intersection streetlights. In addition, other breakers as may be shown in the service panel schedule in the plans will be required.

The Contractor shall obtain all addresses for new services from the City of Las Vegas, Department of Planning and Development, 333 Rancho Drive, (702) 229-5408.

ADD THE FOLLOWING PARAGRAPH TO "B" OF THIS SUBSECTION:

It shall be the Contractor's responsibility to coordinate all work associated with service point connections required by this contract with Nevada Energy.

623 G.03.10 PULL BOXES

ADD THE FOLLOWING PARAGRAPH TO THIS SUBSECTION:

E. The interior of pull boxes shall be void of any other materials except conduit risers and necessary wiring. All excess materials shall be removed to promote drainage.

ADD THE FOLLOWING SUBSECTION:

623 G.03.13 SALVAGING ELECTRICAL EQUIPMENT

A. Where shown on the plans or ordered by the Engineer, existing electrical equipment to be removed, including controller units, cabinets, signal heads, luminaires, standards, mast arms, ballasts, transformers, service equipment, pull boxes, and detector contact units shall be salvaged for reuse by the maintaining agency.

B. Care shall be exercised in removing and salvaging electrical equipment so that it will remain in its original form and existing condition whenever possible. Attention is directed to the provisions in subsection 107.11, "Responsibility for Damage Claims", and 107.12 "Protection and Restoration of Property and Landscape". The Contractor will be required to replace, at his expense, any of the above-mentioned electrical equipment, which, as determined by the Engineer, has been damaged or destroyed by reason of his operations.

C. Unless otherwise specified, underground conduit, conductors, foundations, and detector frames not reused shall become the property of the Contractor and shall be removed from the City right-of-way, except if not interfering with other construction, said materials, except foundations, may, with the written approval of the Engineer, be abandoned in place. Certain other materials, where shown on the plans, shall also become the property of the Contractor.

D. Unless otherwise specified, foundations to be abandoned shall have the top 18" below the crash cap removed and the resulting excavation backfilled. Attention is directed to the provisions in subsection 623 G.03.05, "Excavating and Backfilling", regarding foundations to be abandoned.

E. Holes formed by removing pull boxes and foundations shall be filled with material equivalent to the surrounding material.

F. All street lighting and traffic signal equipment removed and / or designated to be salvaged shall be delivered by the Contractor to the appropriate CLV Service Yard with a means to unload. A 48-hour notice of delivery is required. Call 229-6331 to set up delivery time. Repair of any damage to equipment during this process will be the contractor's responsibility, at no additional cost to the City.

ADD THE FOLLOWING SUBSECTION:

623 G.03.14 REINSTALLING SALVAGED ELECTRICAL EQUIPMENT

A. When salvaged electrical equipment is to be reinstalled, the Contractor shall furnish and install all necessary materials and equipment, including signal mounting brackets, anchor bolts, nuts, washers, and concrete as required to complete the new installation.

B. All traffic signal, flashing beacon, and lighting fixtures to be reinstalled shall be cleaned and relamped.

C. Existing materials required to be relocated and found to be unsatisfactory by the Engineer shall be replaced by new material and the cost therefore will be paid for as extra work as provided in subsection 104.03, "Extra Work".

ADD THE FOLLOWING SUBSECTION:

623 G.03.15 STOCKPILING SALVAGED ELECTRICAL EQUIPMENT

A. Existing equipment removed and not reused shall be salvaged, dismantled and returned to the maintaining agency during normal working hours. Call the maintaining agency to arrange for a time and location to stockpile the salvaged electrical equipment. An inventory of salvaged material shall accompany each delivery.

TRAFFIC SECTION

623 T.02.01 TRAFFIC SIGNAL CONTROLLER CABINETS

DELETE PARAGRAPH "D" OF THIS SUBSECTION AND REPLACE WITH THE FOLLOWING:

D. Unless otherwise specified, all cabinets shall be painted with two coats of white enamel both inside and out. Unpainted, Polished aluminum cabinets are not acceptable.

ADD THE FOLLOWING TO PARAGRAPH "E" OF THIS SUBSECTION:

The lifting tabs shall be bolted in place.

DELETE PARAGRAPH "F.3" AND REPLACE WITH THE FOLLOWING:

There shall be 3 aluminum shelves provided with all cabinets.

DELETE PARAGRAPH "J" AND REPLACE WITH THE FOLLOWING:

Cabinets shall have 2 light fixtures with lamps mounted in the cabinet interior.

DELETE PARAGRAPH "J.1" AND REPLACE WITH THE FOLLOWING:

One fluorescent or LED equivalent light shall be mounted over the door, at a location least likely to be damaged, and shall be a minimum of 20 inches in length.

DELETE PARAGRAPH "J.2" AND REPLACE WITH THE FOLLOWING:

The second light fixture shall be a 15 watt fluorescent or LED equivalent fixture and shall be attached to the bottom of the lowest shelf above the back-panel and field terminals.

ADD THE FOLLOWING PARAGRAPH TO "L.3" OF THIS SUBSECTION:

The AutoCAD format used shall be compatible with the current version of AutoCAD used by the city.

DELETE PARAGRAPH "L.5.i " AND REPLACE WITH THE FOLLOWING:

Two dual-circuit, solid state, NEMA flashers having a flash rate of 50 to 60 flashes per minute (see NEMA TS-1, Section 8, "Solid State Flashers") shall be installed.

DELETE PARAGRAPH "L.5.i.1" AND REPLACE WITH THE FOLLOWING:

The red position of the load switch bays shall be operated from the flasher contacts as follows:

Flasher 1, contact A - phases 1, 5, and OLA

Flasher 1, contact B - phases 2, 6, and OLC

Flasher 2, contact A – phases 3, 7 and OLB

Flasher 2, contact B – phases 4, 8 and OLD

DELETE PARAGRAPHS "L.5.j.3" AND REPLACE WITH THE FOLLOWING:

Two single, fourplex, U-ground type of convenience outlets shall be furnished for video equipment and other electronic test equipment.

DELETE PARAGRAPHS "L.5.j.3.b" AND REPLACE WITH THE FOLLOWING:

The outlets will be located no more than 12 inches from the roof of the cabinet, one on each side panel of the cabinet interior.

DELETE PARAGRAPH "L.5.j.4" AND SUBPARAGRAPHS.

DELETE PARAGRAPH "L.5.k.3.c".

DELETE PARAGRAPH "L.5.l.2.d".

DELETE PARAGRAPH "L.5.l.4.a".

DELETE PARAGRAPH "L.5.l.6.d.3" AND REPLACE WITH THE FOLLOWING:

The toggle switches shall place a call into the controller for the associated pedestrian or vehicular phase when placed in the down (Test) position. This position shall be a momentary position.

ADD THE FOLLOWING PARAGRAPHS TO "L.5.l.6" OF THIS SUBSECTION:

8) An EXTERNAL MINIMUM RECALL (identified EMR) switch shall be provided on the interior of the cabinet door for troubleshooting purposes. It will be a single pole-single throw switch and will apply logic ground to the EMR input to the controller. An LED circuit will also be wired to indicate the switch is activated.

DELETE PARAGRAPHS "L.5.m" AND REPLACE WITH THE FOLLOWING:

All cabinets shall be equipped with power input filters as manufactured by **Innovative Technologies, Inc** model number **HS-P-SP-120-60-RJ** or approved equal, and for telecommunications line protection shall be Model MDF 6 95V or MF 25 95V.

ADD THE FOLLOWING PARAGRAPHS TO "L.5." OF THIS SUBSECTION:

n. Solid state load contactor switch.
o. All cabinets shall be equipped with a fourplex auxiliary power outlet and a duplex GFCI power outlet.

ADD THE FOLLOWING PARAGRAPHS TO THIS SUBSECTION:

M. All field cables and interconnect cable entering the traffic controller cabinet shall be permanently labeled in the cabinet with their location and destination point in the intersection (i.e. "NW Corner – XX-A Pole"). Interconnect cables shall be labeled with their direction of

travel (i.e. “Interconnect – From South” or “Interconnect – To North”). Wherever possible, the phase shall be noted on the label (i.e. “NE Corner – XX-A Pole – phase 8”).

The wires shall be identified using 1-inch wide UV resistant marking tape and the tape manufacturers recommended permanent black ink marker. Once marked, a suitable diameter piece of clear heat shrink tubing shall be installed and shrunk to protect the marking tape. The tubing shall extend 1-inch past the extent of the label in each direction along the wire to prevent moisture and dirt penetration.

623 T.02.02 TRAFFIC SIGNAL CONTROLLER CABINET EQUIPMENT

ADD THE FOLLOWING PARAGRAPH TO “C” OF THIS SUBSECTION:

4. When Audible Tactile Pedestrian Push Buttons (PPB) are specified, an Audible Tactile interface panel shall be provided and mounted on the middle left side wall above the loop detector terminal panel. Central Control Unit (CCU) and failsafe cables shall be provided, neatly installed and terminated per manufacturer instructions. A CCU shall be provided for all cabinets configured for Audible Tactile PPBs.

DELETE PARAGRAPH “E” AND SUBPARAGRAPHS AND REPLACE WITH THE FOLLOWING:

E. Loop Detection:

1. When specified, the cabinet shall be wired with a one (1) 12 slot rack-mounted loop detection unit. There shall be enough capacity for 12-two (2) channel amplifiers (Total of 24 vehicle detector channels). The rack will be wired with the breakdown as follows:

    a. There shall be two (2) channels in the detector rack assembly for each of the phases 1, 3, 5, and 7, wired for left turn operation. These will be wired as presence loops, with each conductor independently terminated onto an individual terminal elsewhere within the cabinet, which can readily be moved. The “Relay Common” must terminate, and then it must be wired to logic ground.

    b. There shall be three (3) channels in the detector rack assembly for each of the phases 2, 4, 6, and 8 wired for thru-traffic operation. These will be wired as presence loops, with each conductor independently terminated onto an individual terminal elsewhere within the cabinet, which can readily be moved. The “Relay Common” must terminate, and then it must be wired to logic ground.

    c. There shall be one (1), channel in the detector rack assembly for each of the phases 2, 4, 6, and 8 wired for thru-traffic “call loop” operation. These will be wired not to output a call during the detected phase green service, with each conductor independently terminated onto an individual terminal. The “Relay Common” must terminate independently, then it must then be wired to the red and yellow output from the controller (this must be diode isolated). Any other

method of “call loop operation” must be approved by Traffic Engineering & Field Operations before acceptance.

d. All detector rack slots must be clearly marked as to the appropriate phase to which it belongs.

e. The panel to be used for field input wiring (loop lead-ins) shall be installed on the lower left sidewall.

2. When specified, the cabinet shall be wired with a two (2) 12 slot rack-mounted loop detection units. There shall be enough capacity for 24-two (2) channel amplifiers (Total of 48 vehicle detector channels). One rack will be wired as specified in Paragraph E.1.a., b., and c, above. The second rack will be wired with the breakdown as follows:

   a. There shall be two (2) channels in the detector rack assembly for each of the phases 1, 3, 5, and 7, wired for left turn operation. These will be wired as presence loops, with each conductor independently terminated onto an individual terminal elsewhere within the cabinet, which can readily be moved. The “Relay Common” must terminate, and then it must be wired to logic ground.

   b. There shall be four (4) channels in the detector rack assembly for each of the phases 2, 4, 6, and 8 wired for thru-traffic operation. These will be wired as presence loops, with each conductor independently terminated onto an individual terminal elsewhere within the cabinet, which can readily be moved. The “Relay Common” must terminate, and then it must be wired to logic ground.

   c. All detector rack slots must be clearly marked as to the appropriate phase to which it belongs.

   d. The panel to be used for field input wiring (loop lead-ins) shall be installed on the lower left sidewall.

3. All cabinets shall be provided with a complete set of two (2) channel rack mount detectors and appropriate number of power supply(s) to fully populate the rack detector assemblies. Two channel rack detector amplifiers shall be Eberle Design Inc., Model 622T (or equivalent) with vehicle extend and delay capability. Detector rack power supply shall be Eberle Design Inc., Model PS 175 (or equivalent).

DELETE PARAGRAPH TO “F.1” AND REPLACE WITH THE FOLLOWING:

All cabinets shall be equipped with encoded Global Traffic Technologies (GTT) Opticom compatible Emergency Preemption.

DELETE PARAGRAPH TO “F.3” AND REPLACE WITH THE FOLLOWING:

Provide one 4 channel rack mounted phase selector card and model 760 rack.

DELETE PARAGRAPH "F.4" AND SUBPARAGRAPHS AND REPLACE WITH THE FOLLOWING:

Cabinets shall be wired with an opticom green-sense harness terminated on the field terminals.

DELETE PARAGRAPH "F.5" AND SUBPARAGRAPHS AND REPLACE WITH THE FOLLOWING:

5. The wiring from the phase selector to the back panel shall be as follows:

   Channel A to Controller Plug A, Pin q.

   Channel B to Controller Plug A, Pin y.

   Channel C to Controller Plug B, Pin W.

   Channel D to Controller Plug B, Pin X.

DELETE PARAGRAPH "G" AND SUBPARAGRAPHS AND REPLACE WITH THE FOLLOWING:

G. Supplemental D Plug Interface Panel:

1. The cabinet shall be equipped with a D panel complete with wiring harnesses to connect the D panel to the D plug on the controller. The cabinet shall be wired to route each of the 48 detector inputs separately into the controller.

The D Panel shall have an integral plug and shall be supplied with two 6 foot connector cables that that can connect the D-panel to the D-plug in either a Naztec 980 ATC or Siemens M53 controller.

The integral plug on the D panel shall be a 57 pin female Amphenol flange mount P/N 206438-1 or approved equal. The connector cables shall each have a 57 pin male Amphenol P/N 206437-1 plug on one end to connect to the interface panel.

The opposite end of one cable will have a 37 pin male D-sub plug to connect to an M53 controller, and the opposite end of the second cable will have a 57 pin male Amphenol P/N 206437-1 plug to connect to an ATC controller (see diagram below).

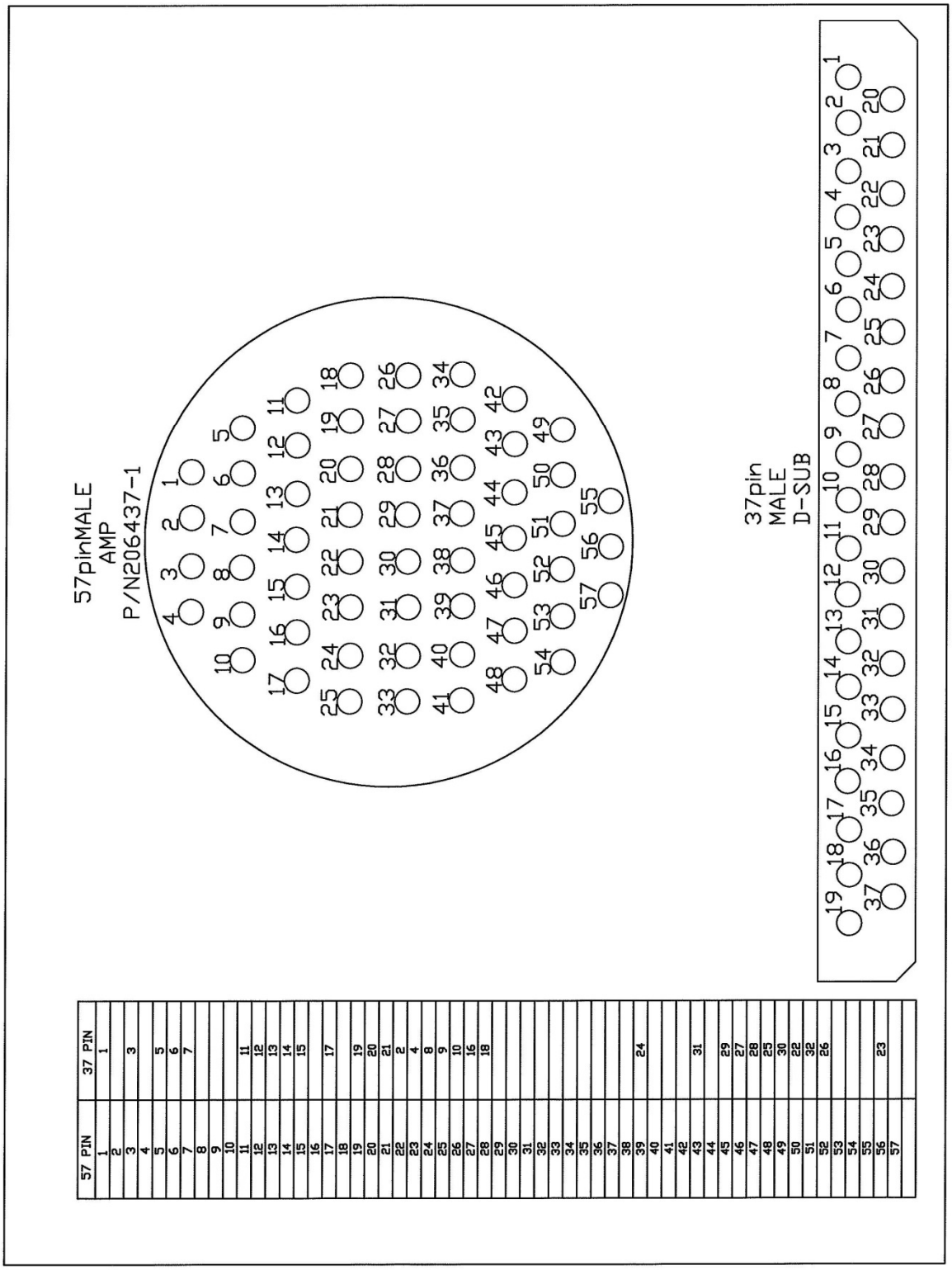

57 PIN	37 PIN
1	1
2	
3	3
4	
5	5
6	6
7	7
8	
9	
10	
11	11
12	12
13	13
14	14
15	15
16	
17	17
18	
19	19
20	20
21	21
22	2
23	4
24	8
25	9
26	10
27	16
28	18
29	
30	
31	
32	
33	
34	
35	
36	
37	
38	
39	24
40	
41	
42	
43	31
44	
45	29
46	27
47	28
48	25
49	30
50	22
51	32
52	26
53	
54	
55	
56	23
57	

DELETE PARAGRAPH "H.1" AND REPLACE WITH THE FOLLOWING:

Unless otherwise specified in the Contract Documents, all traffic control cabinets shall be supplied with a Malfunction Management Unit (MMU) with 16 channels.

DELETE PARAGRAPH "H.2" IN ITS ENTIRETY

DELETE PARAGRAPH "H.3" AND REPLACE WITH THE FOLLOWING:

Each MMU shall be furnished with the program card fully programmed for standard NEMA 8-phase operation.

DELETE PARAGRAPH "H.4" AND REPLACE WITH THE FOLLOWING:

Harnesses shall be wired in accordance with the diagram shown below.

CONFLICT MONITOR PANEL

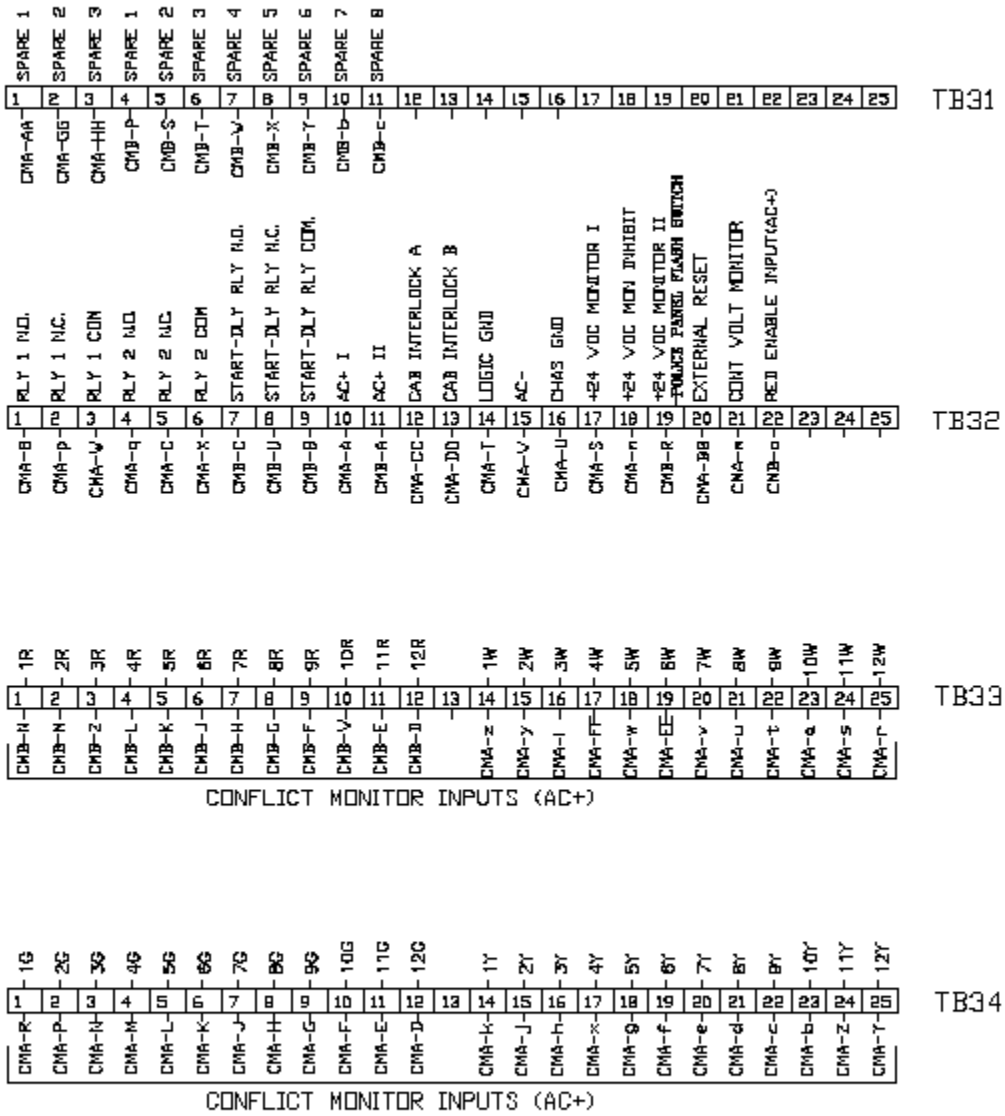

DELETE PARAGRAPH "H.5" IN ITS ENTIRETY

DELETE PARAGRAPH "H.6" IN ITS ENTIRETY AND REPLACE WITH THE FOLLOWING:

The wiring harness for the MMU shall have independent termination points.

DELETE PARAGRAPH "H.9" AND REPLACE WITH THE FOLLOWING:

Unused wires shall be terminated on a separate back panel terminal that is easily accessible from the front of the cabinet without removing other panels.

DELETE PARAGRAPH "I" AND SUBPARAGRAPHS AND REPLACE WITH THE FOLLOWING:

I. All conflict monitors shall be NEMA standard, meeting all requirements of Section 6 of the latest edition of NEMA TS 2 and shall meet the following requirements:

2. Malfunction Management Units shall have 16 channels.

3. Malfunction Management Units shall be capable of monitoring "Flashing Yellow Arrow" operations.

4. Malfunction Management Units shall be model MMU-1600GE as manufactured by Reno A&E, or model MMU2-16LEip as manufactured by Eberle Design, Inc., or approved equal.

5. Malfunction Management Units shall be wired per the "Interlock Diagram" shown below with the appropriate relays.

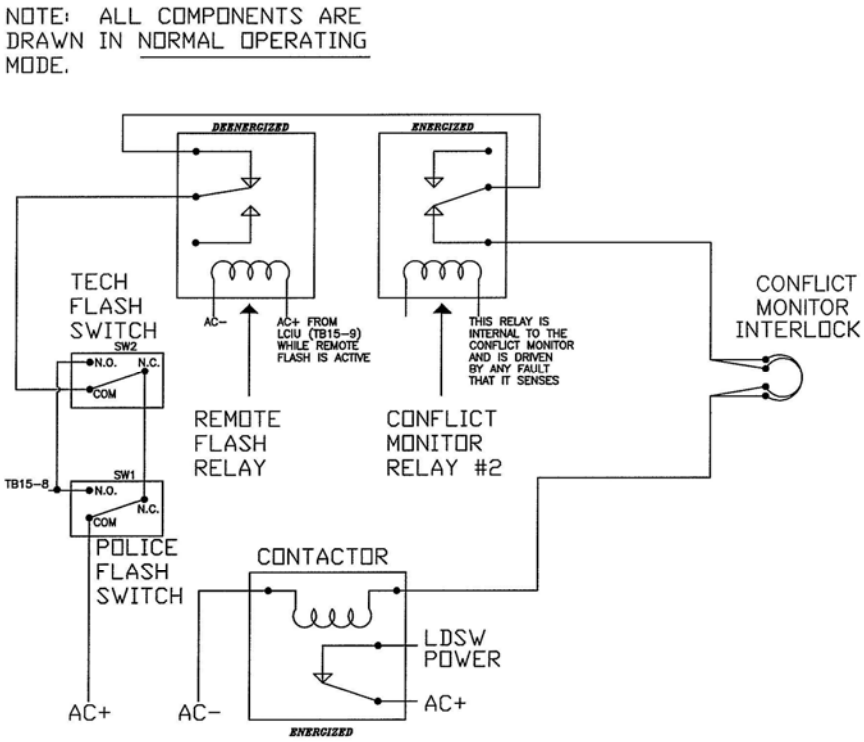

INTERLOCK DIAGRAM

623 T.02.03 TRAFFIC SIGNAL CONTROLLERS

DELETE "B.3" OF THIS SUBSECTION IN ITS ENTIRTY.

DELETE "B.6.d" OF THIS SUBSECTION AND REPLACE WITH THE FOLLOWING:

The contractor shall be responsible for configuring all electronic equipment to provide a fully functioning system which includes opticom, video and/or loop detection as applicable and pedestrian pushbutton configuration. The video detection equipment manufacturer shall provide a technical representative at the intersection during the turn-on and testing period if necessary. The contractor shall also furnish and install all Ethernet cables necessary to connect all IP capable electronic equipment to the IP switch in the cabinet.

DELETE "C" AND "D" OF THIS SUBSECTION AND REPLACE WITH THE FOLLOWING:

C. Traffic signal controllers shall be one of the following:

1. **NAZTEC 980 ATC TS2 Type 2 NTCIP Compliant Signal Controller**.

2. **Eagle M53 controller**.

D. The Contractor shall supply the controller to the City of Las Vegas Traffic Signal Repair Shop, fourteen days prior to signal turn-on, for testing. The Contractor shall deliver the

controller to 2824 E. Charleston Boulevard. Contractor shall notify the Traffic Signal Repair Shop (229-6075) seven days prior to installation.

623 T.02.04 MAGNETIC INDUCTION LOOP DETECTORS

ADD THE FOLLOWING TO "A.1":

The term "loop leads" and "home runs" refers to two (2) conductors from the loop detector in the roadway to pull box. The term "loop lead in" refers to the conductors from the conductors from the pull box to the traffic signal controller cabinet.

DELETE "A.4" AND "A.5" OF THIS SUBSECTION AND REPLACE WITH THE FOLLOWING:

A. 4. Loop leads shall be properly marked in the pull box and the cabinet as to the location and which vehicular phase of the traffic signal is associated with that loop as well as a lettered designation corresponding to the designation shown on the contract drawings. For example, a loop lead for the eastbound thru movement might be labeled as either 4B, 4C, 4D, or 4E.

A. 5. A minimum of 5 feet of loop wire and 5 feet of loop lead-in shall be provided and stored in the pull box for slack.

DELETE "A.7" OF THIS SUBSECTION IN ITS ENTIRETY.

ADD THE FOLLOWING PARAGRAPH TO "B.7." OF THIS SUBSECTION:

B. 7. Preformed loops shall by one of the following manufacturers:

a. Reno A & E,

b. Never-Fail Loop Systems, or

c. Approved equal.

ADD THE FOLLOWING PARAGRAPH TO "B" OF THIS SUBSECTION:

8. *(This installation should be used when pavement is to be milled/overlay or as an alternative installation method for full-depth pavement replacement)*

[When constructing new asphalt concrete pavement] [For milling and overlay pavement operations], preformed loops shall be installed prior to the final lift of pavement in saw cut loop slots made in the dense grade pavement (i.e. prior to the final lift of dense grade asphalt concrete, open grade, or U.T.A.C.S. pavement). There shall be a minimum cover of two inches measured from the bottom of the final finish grade pavement surface to the top of the preformed loop.

When installing loops in existing asphalt concrete or portland cement concrete pavements not being milled or replaced, saw cut slots in the pavement shall be a

minimum of three inches in depth and there shall be a minimum cover of two inches measured from the finish grade pavement surface to the top of the preformed loop.

When constructing new portland cement concrete pavement, preformed loops shall be installed prior to placement of the pavement at the interface between the concrete pavement and base course material.

Sawed slots shall be spaced a minimum of six inches (150 millimeters) apart and shall be blown clean of all loose material and dried prior to the installation of the preformed loop. The preformed loop shall be carefully placed into the saw slot using special tools to avoid inflicting damage to the preformed loop assembly. When more than one loop terminates in a pull box, each loop shall have a separate sawed slot for its leads and leads shall be properly marked as specified below. Loop slots shall be sealed prior to paving. Polymeric sand may be used in lieu of sealant with the approval of the Engineer. The saw cuts shall be blown clean after wire installation and before placement of sealant. The loop lead-in cable shall be as specified below. Each loop system (i.e. advanced detection, left turn movements, thru movements, and right turn movements) shall have at least one separate lead-in to the controller cabinet.

Loop leads shall be properly marked in the pull box and the cabinet as to the location and which vehicular phase of the traffic signal is associated with that loop as well as a lettered designation corresponding to the designation shown on the contract drawings. For example, a loop lead for the eastbound thru movement might be labeled as 4B, 4C, 4D, or 4E. A minimum of five (5) feet of loop wire and five (5) feet of loop lead-in shall be provided and stored in the pull box for slack. All loop wire home run to pull box shall clearly identify the direction of the cables windings for ease of installation.

Loop wire installation shall be tested using a megohmeter both prior to the placement of loop wire sealant, as well as after installation, in the presence of a City representative. Insulation resistance readings shall not be less than 100 megohms at 1000 volts.

DELETE "C" OF THIS SUBSECTION AND REPLACE WITH THE FOLLOWING:

C. Cable-in-Duct System.

1. The loop system shall be wired with a cable-in-duct assembly, defined as No. 12 AWG minimum, meeting IMSA Specification No. 51-5 as indicated in the Standard Drawings, directly installed in sawcut slots.

2. When constructing new asphalt concrete pavement, loop wires shall be installed prior to the final lift of pavement in saw cut loop slots made in the dense grade pavement (i.e. prior to the final lift of A.C.). There shall be a minimum cover of two inches measured from the bottom of the final asphalt concrete surface to the top of the loop.

3. When installing loops in existing asphalt concrete or Portland Cement concrete pavements not being milled or replaced, or in new Portland Cement concrete pavement, saw cut slots in the pavement shall be a minimum of three inches in depth and there shall be a minimum cover of two inches measured from the finish grade pavement surface to the top of the loop.

4. The loop or loops shall be installed in the saw cut slots in the pavement and shall be oriented and color-coded or taped in accordance with the Standard Drawings and plans. Sawed slots shall be blown clean of all loose material and dried. Loop wire shall be carefully placed into slot, avoiding damage to the wire insulation. When more than one loop terminates in a pull box, a maximum of two loop home runs shall be installed per single slot and leads shall be properly marked as specified below. Loop home runs assigned to different signal phases shall not share the same slot with loop home runs for another phase.

5. Sawed slots shall be spaced a minimum of six (6) inches (150 millimeters) apart.

6. Loops slots shall be sealed with detector sealant flush with pavement surface.

7. Each loop system shall have a separate lead-in to the controller cabinet.

8. All loops shall be megohmeter tested.

ADD THE FOLLOWING PARAGRAPHS TO "F" OF THIS SUBSECTION:

Multiple Conductor Loop Lead-In Cable for connection of Multiple Loop Systems:

When multiple conductor loop lead-in cable is specified on the contract drawings, use cable that conforms to the following specifications to connect multiple loop systems to the terminal blocks in the controller cabinet:

1) NEC / (UL) Specification TC or CM, certified for use in underground conduit or as an aerial cable supported by a messenger
2) 18 AWG stranded tinned copper conductors, polypropylene or polyethylene insulation. Six twisted pairs with insulation colors that match table below
3) Each twisted pair individually shielded with an aluminum foil shield that provides 100% coverage and a 20 AWG tinned copper drain wire
4) Outer jacket of polyvinyl chloride (PVC) or polyethylene (PE), cable rated for 300 volts minimum

6-Pair Loop Lead-in Cable Assignments

Pair Number	Color	Phase Letter Designation
1	Black & Red	A
2	Black & White	B
3	Black & Green	C
4	Black & Blue	D

5	Black & Yellow	E
6	Black & Brown	F

REPLACE EACH OF THE FOLLOWING SENTENCES OF "H" OF THIS SUBSECTION WITH THE FOLLOWING:

For Downtown pole mount cabinets, use two shelf mount detector amplifiers with 4 channels per loop detector amplifier.

2. All detectors shall be of the rack mounted type.
9. There shall be 2 channels per each loop detector.

ADD THE FOLLOWING PARAGRAPH TO "H" OF THIS SUBSECTION:

20. Turning off a loop amplifier shall not place a call.

623 T.02.05 EMERGENCY VEHICLE PRIORITY CONTROL SYSTEM (INTERNAL PREEMPTION)

ADD THE FOLLOWING PARAGRAPH TO THIS SUBSECTION:

Optical Preemption units shall be Global Traffic Technologies (GTT) (encoding capable), using a Model 764 phase selector installed in a Model 760 card rack with a Model 768 Auxiliary Interface Panel mounted in the cabinet and fully wired for green sense capabilities. Optical sensors shall be Model 721 and will be interfaced to the traffic signal controller cabinet using an M-138 cable. **No other optical preemption units will be accepted**. This is necessary to facilitate area-wide vehicle encoding.

623 T.02.06 TRAFFIC SIGNAL VIDEO IMAGE DETECTION SYSTEMS

ADD THE FOLLOWING TO THIS SUBSECTION:

A. All cabinets shall be wired for a Video Detection System with appropriate cameras (minimum one per vehicular direction) and cables mounted according to the manufactures specifications for each direction of vehicular travel. The following requirements must be met by the supplier of the equipment:
   1. **All vehicle detection will be by video image detection using either Iteris Edge 2 with Edgeconnect Pac (IP addressable), or Peek Videotrak IQ (with Ethernet port) video detection systems, or TRAFICON VIP 3D.2 with VIEWCOM E MAX+ (IP ADDRESSABLE) in a TRAFFICON detector rack**. The Video Detection System shall be an above ground vehicle detection system that utilizes machine vision when interfaced with standard color CCD cameras to provide complete intersection and roadway detection

   2. A single NEMA certified chassis shall be supplied for each Video Image Detection System, which will allow expandability to provide for a minimum of six camera inputs for vehicle detection. All interface equipment including interface panels, connectors, and cabling shall be provided and wired in the controller cabinet to accommodate a minimum of six camera operation, or as shown on the Contract Drawings.

3. Each Video Detection System will include a minimum of 4 standard color cameras, or as shown on the Contract Drawings. All cameras shall be equipped with adjustable lenses, allowing the user to modify the apparent size of the lens angle. These are also referred to as “zoom lenses”. Each direction/camera shall have a minimum of 24 user programmable detection zones (not lines or “probes”), and include heater, sunshield and mounting brackets. Each camera will have power and video directly from the cabinet. Coaxial cable will be type 8281 (solid center conductor). Camera connections that use a prefabricated cable integrating power and coaxial cable into a single weatherproof connector are acceptable. An in-line filter (CX06-BNCY or equivalent) will be provided for each camera coaxial cable input. The in-line filters will be mounted on a panel (panel to be attached to the inner side wall of the cabinet). “BNC” connectors are the only acceptable termination of coaxial cables. Cameras shall be mounted per the manufacturer’s recommendations and per the CLV Traffic Engineer approval. Cameras shall be mounted using a 72” extension bracket on signal mast arms. Cameras should be centered over the lane line between the left turn lane and the through lane for the approach being detected. The contractor should contact the city Traffic Signal Supervisor prior to mounting cameras for approval of the mounting locations.

4. All delay and extension functions for an approach must be performed within the video unit.

5. The units must be capable of simultaneously detecting all vehicles 300 feet from the stop bars on every approach.

6. The Video Image Detection System shall have an internet protocol (IP) port for remote access capability to transmit video and detector information to a computer. The Video Image Detection System shall have the capability to remotely reconfigure detection zones and transmit video via phone line, twisted pair, coaxial cable and fiber optic interconnect.

7. The Contractor shall provide a fully functioning and programmed system complete with latest version of manufacturer’s software. All software and hardware for installation, operation and maintenance will be supplied to the City along with necessary technical support upon setup, if needed.

8. The Video Detection System shall utilize standard 24 volt logic signal outputs to interface with NEMA TS1/TS2, 170/179, 2070, or other future ATC controllers.

9. The Video Image Detection System must provide logic ground to all detector outputs that shall be active during programming of detection zone layouts.

10. All of the system’s micro-processing functions must be performed in the video unit, which must be located within the controller cabinet.
11. All equipment schematics and technical material must accompany any equipment supplied to the City of Las Vegas Traffic Electrical Field Operations, upon turn-on of the signal.

623 T.02.08 VEHICLE SIGNAL FACES

ADD THE FOLLOWING PARAGRAPH TO "A" OF THIS SUBSECTION:

5. Vehicle signal faces shall be ETL compliant. The ETL Listed Mark indicates that the manufacturer's production site conforms to a range of compliance measures and is subject to periodic follow-up inspections to verify continued conformance, and the product meets the minimum requirements of widely accepted product safety standards as determined through independent testing of a Nationally Recognized Testing Laboratory.

623 T.02.10 PEDESTRIAN SIGNAL FACES

ADD THE FOLLOWING PARAGRAPH TO "A.1" OF THIS SUBSECTION:

All pedestrian signal faces shall provide "Walking Person", "Hand", and "Countdown" messages as provided by **Duralight model #JXM-400-VIEIL** or **Dialight model #430-6479-001X** or approved equal (must be ETL compliant for consideration).

623 T.02.11 PEDESTRIAN PUSH BUTTONS:

DELETE THIS SUBSECTION IN ITS ENTIRITY AND REPLACE WITH THE FOLLOWING:

A. Mounting height of the pedestrian push button shall be 42" above the sidewalk.

B. All pedestrian push buttons **shall be either Campbell Company Advanced Accessible Pedestrian System, part numbers AAPS APB912 (buttons) with AAPS APC (controller), or Polara Navigator 2-Wire System** Audible-Tactile Pedestrian Push Button type, or approved equivalent, in accordance with the request from the Nevada Bureau of Services to the Blind and Visually Impaired. Equivalent systems shall conform to the audible-tactile pedestrian system specifications below.

C. AUDIBLE-TACTILE PEDESTRIAN SYSTEM SPECIFICATIONS

1. GENERAL DESCRIPTION

a) The Audible-Tactile pedestrian system shall consist of all electronic equipment, mounting hardware, power supplies, push buttons, and sign faces, which are designed to provide both a raised vibrating tactile arrow along with a variety of audible sounds for different traffic signal functions. The system shall consist of a Control Unit and Pole Mounting Assembly, as described below. Additionally, documentation shall include shop drawings for all equipment, electronic schematics, required voice setup software/ hardware, and installation/operations manuals.

2. FUNCTIONAL REQUIREMENTS

a) The system shall vibrate the tactile arrow during every time the WALK interval indication is displayed.

b) The system shall have the field-selectable function known as “Locating Beep.” This means that during the Flashing DONT WALK and the DONT WALK intervals, the system shall provide a steady, non changing, (constant dB level) pole locating tone that emanates directly in the vicinity of the Pedestrian Push Button.
c) The system shall have the field-selectable function known as “Extended Push Activation.” This means that the audible WALK message will only be activated and sound during the WALK interval if the button is depressed for a minimum of three (3) seconds. This audible WALK message shall be able to be field set to allow for automatically adjusting to ambient noise levels via control circuitry.
d) The system shall have the function referred to as “Voice Location Message.” This means that the location of the street to cross, and the intersection will be vocalized only when the button is depressed for a minimum of three (3) seconds. This shall be a field-settable option, and the volume shall be automatically adjusted to ambient noise levels
e) The audible messages must be easily programmable by City staff, with the needed hardware and software to be supplied by the system’s vendor.
f) Automatic volume adjustments for ambient noise shall be field selectable.

3. CONTROL UNIT

GENERAL DESCRIPTION
The equipment needed for the Control Unit must be able to be mounted in the Pedestrian Head Housing on the Traffic Signal Pole. It shall be powered from the 120 VAC, WALK/DONT WALK lamp indications in the housing. The unit shall conform to the following specifications.

a) POWER REQUIREMENTS: 115 VAC, 60Hz, (100 ma, typical)
b) Separate power inputs for “WALK” and “DONT WALK”, two ¼ AMP fuses mounted on the board
c) POWER SUPPLIED TO VIBRATOR: 12 VAC, .3A Typical, to operate during WALK interval only
d) AUDIO AMPLIFIER POWER OUTPUT: 10 W RMS into 8 ohms
e) VOLUME CONTROL: On board trimming potentiometer for overall adjustment
f) VOLUME CONTROL AUTOMATIC ADJUSTMENT RANGE: 28 Db
g) MICRPHONE FOR AMBIENT NOISE: Mounts in Pedestrian head housing. Frequency range: 170 Hz to 2.3 Khz
h) PED PUSH BUTTON INTERFACE: Accepts 12 to 24 Volts AC/DC imposed by connection to push button which will be terminated in an existing traffic signal controller cabinet
i) JUMPER SELECTABLE OPTIONS:
   i. Chirp
   ii. Cuckoo
   iii. Walk Message
   iv. Location Message if Available
   v. Extended Push Button Triggering
   vi. Locating Tone

j) MOUNTING: Mounts inside the pedestrian head housing using existing threaded holes in the rear wall on 9 ¼" centers. Designed to clear reflector in standard housing of dual incandescent pedestrian head. Not for use within the older, neon/transformer assemblies. The assembly shall accommodate a standard 9" X 12" pedestrian sign.

k) AUDIBLE LOCATING TONE: 880 Hz plus harmonics, 0.1 second duration, 1 second interval. Operates during flashing DONT WALK and solid DONT WALK indications, only

4. POLE MOUNTING ASSEMBLY

GENERAL DESCRIPTION: This equipment is the part that will be visible to the pedestrians. It is commonly referred to as the "Pedestrian Push Button Assembly." This shall contain the 2" ADA-compliant Pedestrian Push Button, the directional tactile arrow, the weatherproof speaker, and the appropriate informational sign for each location.

a) VIBRATOR POWER: 12 VAC, .3 A Typical
b) SPEAKER: 8 Ohms, 15 Watt maximum, weather-proof
c) PUSH BUTTON: Mounting height of the pedestrian push button shall be 42-inches above the sidewalk

5. MESSAGE MARKING

The Message Sign shall be an R10-3E sign, 9"x12" (size modified), per MUTCD 2009 edition, and shall be porcelain enameled metal.

623 T.02.12 FLASHERS

ADD THE FOLLOWING TO THIS SUBSECTION:

H. Solar Pedestrian Crosswalk Flashing Beacon System

Each system unit shall consist of a solar / battery system, an electronic control module, a wireless communication system to synchronize the flash for multiple system units, and a 12" circular yellow Light Emitting Diode (LED) signal indication and housing. A single unit may include two beacons, one for each direction. The number and configuration of Flashing Beacon units for each Pedestrian Crosswalk shall be as indicated on the contract drawings.

The system units shall be **Carmanah Model R820C Solar powered pedestrian activated flashing beacons**, **JSF Technologies Models AB-2412 (double head)** or **JSF Technologies Models AB-1412 (single head) Pedestrian activated crosswalk beacons,** or approved equal.

Other manufacturer units may be acceptable to the City of Las Vegas that meet or exceed the following specifications:

1. LED Module

a) The lens shall be 12 inches in diameter per latest edition of the MUTCD Section 4D.15
b) LEDs shall be color emitted
c) Lens may be same color or clear
d) LED power peak consumption to be 6 watts

2. Electronic Module

a) Electronics to be housed in a weatherproof metal casing with theft resistant locking hardware
b) Flash pattern and rate shall have multiple patterns with one pattern and rate to meet MUTCD, latest edition, Section 4K.01
c) System shall include energy management system to continuously monitor battery and solar intensity and shall have the ability to increase brightness in sunny conditions and increase longevity in overcast or night time conditions
d) System to continue to operate for a minimum of 30 days, without solar recharging with a set flash rate meeting the MUTCD specified flash pattern

3. Solar Panel Module

a) The solar system shall include one or more solar panels with a total solar collection surface area to be no larger than 16” x 16” for single flashing beacon units
b) Solar panel visibility to be discrete from ground level to reduce theft or threat of vandalism
c) Solar panel collection to be omni-directional as to not be dependent on orientation for maximum collection efficiency

4. Battery Module

a) System shall use commercial available lead-acid, cell batteries that are field replaceable
b) Battery module shall have a battery cooling system
c) Battery housing to be white for heat reflection, if external on flasher unit
d) Battery housing to be theft resistant
e) Battery housing shall have a hinged lid for battery access with theft resistant locking hardware
f) Batteries shall be mechanically secured within the battery housing

5. Flasher Unit

a) Flasher unit to be integrated with no external connected parts
b) Flasher housing to be black in color, or as specified in the Contract Drawings.
c) Flasher unit shall be powder coated cast aluminum
d) Complete flasher unit weight shall not exceed 60 lbs, including batteries
e) Flasher units shall have detachable metal backplates which shall be flat black in color
f) Flasher units shall have metal tunnel visors which shall be flat black in interior color

g) Flasher units shall be equipped with hardware and be capable of mounting to the top of a Clark County Area Standard 1-A pole with a 4.5” O.D. post top collar, or to the side of a Clark County Area Standard streetlight pole Flasher unit shall follow the provisions of the MUTCD, latest edition, Chapter 4K, Flashing Beacons

6. Activation and Operation

a) Each flashing beacon unit or units of a system shall be capable of being activated by a pedestrian push button, and shall operate for a set flash duration upon activation. System shall reset flash duration upon activations that occur mid-cycle. The flash duration shall be user configurable in the field from 5 – 60 seconds, in increments of 5 seconds or less. Each unit shall be able to transmit a wireless activation signal to other flashing beacon units in the system upon pedestrian activation. The wireless technology shall maintain a coordinated flash pattern (either alternating or unison) with all the beacons in the system throughout the duration of the activation

b) System coordination must be repeatable upon testing for at least 50 activations. Both sides must be activated, flash, and stop flashing at the same time consistently

c) System must be able to power and be activated by a compatible pedestrian pushbutton. The button shall be capable of providing an audible tone and/or beep and a visible momentary or latched LED light to notify the user the switch was activated. The pedestrian pushbutton shall be vandal resistant.

7. Environmental Specifications

a) The system shall be able to withstand and operate at temperature extremes of 10 deg F to 165 deg F

b) The system shall be designed and constructed to withstand wind loads in conformance with the requirements of the AASHTO publication, "Standard Specifications for Structural Supports of Highway Signs, Luminaries and Traffic Signals", 4th Edition, with latest interims

c) The electronic circuit board housing, wire harnessing and connectors shall be designed in accordance to IEC International Standard 60529, Ingress Protection IP67 requiring that the enclosure be dust tight and remain completely sealed when immersed in water to a depth of 1 meter for 1 hour

d) The LED Module shall meet the following environmental tests as specified in the ITE Vehicle Traffic Control Signal Heads, Light Emitting Diode (LED) Circular Signal Supplement:
Mechanical vibration: MIL-STD-883
Temperature cycling: MIL-STD-883
Moisture resistance: MIL-STD-810F

8. Warranty

a) The system, including battery pack, solar panel, LED module and all components, shall be guaranteed by the manufacturer for a minimum of three years

b) Warranty shall include all parts of the unit including batteries

623 T.02.13 TRAFFIC SIGNAL POLES:

DELETE PARAGRAPH "A" IN ITS ENTIRETY AND REPLACE WITH THE FOLLOWING:

A. All traffic signal poles shall consist of continuous, tapered round steel pole shaft of the length specified, pole cap, anchor bolt cover, and hand hole covers(s), with the bolts, nuts, and washers necessary to complete the installation of the pole shaft. Multi-sided steel traffic signal poles are not accepted.

DELETE PARAGRAPH "B" IN ITS ENTIRETY AND REPLACE WITH THE FOLLOWING:

B. The traffic signal and luminaire mast arms shall consist of continuous, tapered round steel tubes of the length specified, mast arm end caps and bolts, nuts, and washers necessary to complete the installation of the mast arms. Multi-sided steel traffic signal and luminaire mast arms are not accepted.

DELETE PARAGRAPH "K" IN ITS ENTIRETY AND REPLACE WITH THE FOLLOWING:

K. The pole shafts shall be of round cross section, with a minimum outer diameter at the base as shown in the Uniform Standard Drawings for the type of pole specified, and shall uniformly decrease in diameter at the rate of 0.14 inches per foot of length.

1. Pole shafts shall be straight, with a permissive variation not to exceed ¼ inch for each 10 feet of pole shaft.

   a) A 30-foot pole would have ¾ inch allowable deviation at the midpoint of the pole shaft.
   b) A 20-foot shaft would have a ½ inch allowable deviation.
   c) A 10-foot shaft could deviate a maximum of ¼ inch at the midpoint.

ADD THE FOLLOWING PARAGRAPHS TO THIS SUBSECTION:

W. Tenons

1. The mast arm is to be fabricated with end tenon only. The end tenon shall be factory installed and the remaining tenons shall be fabricated in the field at the locations shown on the plans or as directed by the Traffic Engineer and/or his authorized representative.

2. For tenon fabrication details see Clark County Area Uniform Standard Drawing No. 808 and No. 810.

X. Welds

1. All welding shall conform to AWS D 2.0, "Specification for Welded Highway and Railway Bridges", and to any additional requirements in this subsection.

2. All exposed welds, shall be painted as provided for repairing damaged galvanized surfaces.

3. All welders must be certified by the American Welding Society (AWS) or similar organization in the welding of steel and galvanized steel.

4. All exposed weld joints shall be treated with rust inhibitors (i.e. Chemtrek or equivalent) and shall be painted as provided for repairing damaged galvanized surfaces.

623 T.02.16 INTERNALLY ILLUMINATED STREET NAME SIGNS

REPLACE SENTENCES 3 THROUGH 9 OF PARAGRAPH "C" WITH THE FOLLOWING:

3. Sign lettering shall be as shown on the contract plans and shall conform to the 2009 edition of the M.U.T.C.D.

4. The sign face shall have the compass direction of the location marked in the upper left corner of each sign panel with a 5-inch upper case letter (N, S, E or W).

5. The street name suffix (Street, Way, Blvd., and so forth) shall be displayed in the upper right corner of the sign panel.

6. The street address number of the location shall be shown at the lower right corner in 5-inch upper case letters and numerals.

7. Engineer approval is required for the sign faces prior to fabrication.

ADD THE FOLLOWING PARAGRAPHS TO THIS SUBSECTION:

G. Internally Illuminated street name signs shall be wired to the luminaries photocell for control with No. 10 AWG THW copper stranded wire. In the event there is no luminaire on the traffic signal pole, a 1000 watt photoelectric control shall be mounted on the pole cap.

H. Internally Illuminated street name signs shall be LED and shall be one of the following products, or approved equal:

NUART LIGHTING LED EDGE LIT SERIES with ASTM Type IX retroreflective sheeting, and bandable mounting with L-brackets;

TEMPLE EDGE·LIT 96" Model R409A with ASTM Type IX retroreflective sheeting, and under·hang mast arm mount;
SOUTHERN MANUFACTURING Part No. CP818DTJNNAAD1 with 8' x 18" Double Face Viewable Clean Profile LED; Top Mount, bandable mounting with L- brackets, "L" Adapter, No Photocell, Monarch Black, DG-Reflective / EC Film (Green); **Overall size: 8' x 21"**

ADD THE FOLLOWING SUBSECTION TO THIS SECTION:

623 T.02.19 LUMINAIRE ON SIGNAL POLES

A. Luminaires on all signal poles shall be an approved LED equal to a 400 Watt High Pressure Sodium cutoff luminaire, G.E. M400A, with MC-111 distribution, or other approved LED light to satisfied (HIGH Pedestrian) light level as shown on USC 300.S3.

TABLE 2

REQUIRED ILLUMINANCE VALUES FOR SIGNALIZED INTERSECTIONS							
ROADWAY CLASS	R.O.W. WIDTHS	MIN. AVE. ILLUMINANCE BY PEDESTRIAN AREA CLASSIFICATION			SIDEWALK / WALKWAY LIGHTING LEVELS		
		HIGH	MEDIUM	LOW	MIN. AVG. ILLUMINANCE	MIN. ILLUMINANCE	UNIFORMITY AVG./ MIN.
ARTERIAL / ARTERIAL	100' OR GREATER BY 100' OR GREATER BY	3.4 FC	2.6 FC	1.8 FC	2.0 FC	1.0 FC	4:1
ARTERIAL / MAJOR COLLECTOR	100' OR GREATER BY 00' OR GREATER BY	2.9 FC	2.2 FC	1.5 FC	2.0 FC	1.0 FC	4:1
ARTERIAL / MINOR COLLECTOR - RESIDENTIAL	100' OR GREATER BY 79' OR LESS	2.6 FC	2.0 FC	1.3 FC	2.0 FC	1.0 FC	4:1
MAJOR COLLECTOR / MAJOR COLLECTOR	80' - 99' BY 80' - 99'	2.4 FC	1.8 FC	1.2 FC	2.0 FC	1.0 FC	4:1
MAJOR COLLECTOR / RESIDENTIAL	80' - 99' BY 79' OR LESS	2.1 FC	1.6 FC	1.0 FC	2.0 FC	1.0 FC	4:1

B. Special lighting requirements

1. Downtown Centennial area

a) Signal pole luminaires shall be an approved LED equivalent to a Gardco CA22L-LED light, or other approved LED light to satisfied (HIGH Pedestrian) light level as shown on USC 300.S3.

CONSTRUCTION

623 T.03.01 PAINTING

ADD THE FOLLOWING SUBSECTION TO THIS SECTION:

B. Special City of Las Vegas Areas

1. Unless otherwise specified, traffic signal system equipment located within the "special areas" noted below shall be finished with the color as indicated:

   a) Downtown Centennial Plan area: **RAL 6012 "Black Green".**

2. The following signal system components located in the special areas noted above shall be painted accordingly:

   a) Traffic signal pole
   b) Traffic signal mast arm
   c) Traffic signal tenons
   d) Traffic luminaire arm
   e) Traffic signal luminaire head (reference Subsection 623 T.02.19 LUMINAIRE ON SIGNAL POLES of these special provisions)

3. Traffic signal poles, mast arms, luminaire arms and other elements specified to be painted shall be factory finished with a high-build, acrylic polyurethane enamel. Alternatively, a polyester TGIC or urethane polyester powder coat finish may be used. Equipment to be painted/coated shall be prepared and painted per manufacturer's specifications.

4. The traffic signal mast arm shall be delivered with no tenons mounted to the mast arm. After the traffic signal pole foundation is constructed, the tenons shall be fabricated in the field at the locations shown on the plans or as directed by the Traffic Engineer. All welding shall conform to 623 T.02.13 of the CCAUSS and these Special Provisions. After installation of the tenons, the mast arm shall be shop painted and finished to match the traffic signal pole. No brushes or rollers shall be used to apply primers or paint except as approved by the Engineer.

STREET LIGHTING SECTION

623 L.02.03 STREET LIGHTING LUMINAIRES

DELETE THIS SECTION IN ITS ENTIRETY AND REPLACE WITH THE FOLLOWING:

A. The standard luminaire shall be as specified in the Contract Drawings.

Streetlight Luminaires shall be LED and provide light level to meet the requirement as specified on USD 300.S3. For the Cobra head style, the luminaire can be GE EVOLVE LED ROADDWAY SCALABLE SPEC GRAD COBRAHEAD, PHILIPS HADCO LED COBRAD HEAD, or approved equal by the Engineer. Roadway light fixture should be type III distribution. Lighting study will be required.

TABLE 1

REQUIRED ILLUMINANCE VALUES FOR ROADWAYS					
ROADWAY CLASS	R.O.W. WIDTHS	ROADWAY LIGHTING ILLUMINANCE LEVELS		SIDEWALK / WALKWAY ILLUMINANCE LIGHTING LEVELS	
		MIN. AVG.	UNIFORMITY AVG./MIN.	MIN. ILLUMINANCE	UNIFORMITY AVG./ MIN.
ARTERIAL	100' OR GREATER	1.58 FC	3:1	0.2 FC	4:1
MAJOR COLLECTOR	80' TO 99'	0.84 FC	4:1	0.2 FC	4:1
MINOR COLLECTOR	60' TO 79'	0.38 FC	6:1	0.08 FC	6:1
RESIDENTIAL	51' OR LESS	0.38 FC	6:1	0.08 FC	6:1

In DOWNTOWN CENTENNIAL area, all streetlight shall be concrete black pole with single or dual LED lighting (Roadway side 160w led and Pedestrian side lighting 110w led – rotated 180degre). The street light pole can either be the Ameron or Stresscrete - 26'-3" pole. The length of streetlight pedestrian side arm varies with the sidewalk width. For sidewalk of 10' (including amenity zone) – the arm length should be 4'. For 15' sidewalk, the arm length should be 6' and for greater than 15' sidewalk or meandering sidewalk, streetlight arm can be 8' to match the street side lighting. For area where sidewalk meander more than 15' from back of curb, trail lighting maybe required to meet the lighting level. The lighting fixtures are to be the Philips Gardco ROUND 10 – CA22L or other approved equal LED light that will meet the aesthetic and the light level requirement as specified on USD 300.S3. Additionally, for areas where high amounts of pedestrians are anticipated, the light level shall be increased to meet Table 4 of the ANSI/IES RP-8-14 (below). Lighting study will be required. Special foundations for the black concrete pole are also required see below.

TABLE 4 - RECOMMNEDED VALUES FOR HIGH PEDESTRIAN CONFLICT AREAS			
MAINTAINED ILLUMINANCE VALUES FOR WALKWAYS			
	E_{avg} (lux/fc)	Ev_{min}(lux/fc)	E_{avg}/E_{min}*
Mixed Vehicle and Pedestrian	20.0/2.0	10.0/1.0	4.0
Pedestrian Only	10.0/1.0	5.0/0.5	4.0
E_{avg} - minimum maintained average horizontal illuminance at pavement			
E_{min} - minimum horizontal illuminance at pavement			
EV_{min} - minimum vertical lluminance at 1.5m above pavement			
*Horizontal only			

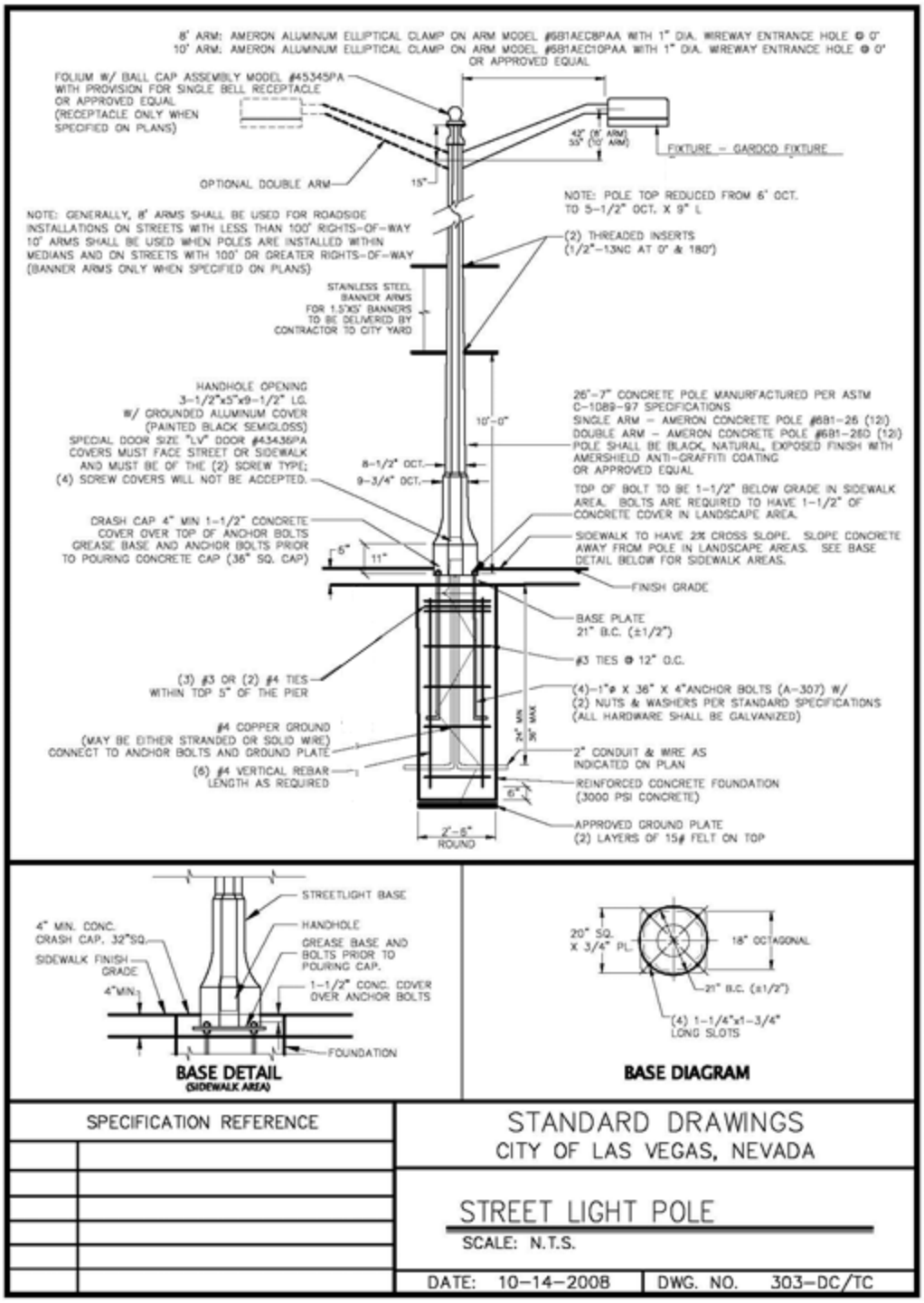
8' ARM: AMERON ALUMINUM ELLIPTICAL CLAMP ON ARM MODEL #681AEC8PAA WITH 1" DIA. WIREWAY ENTRANCE HOLE @ 0°
10' ARM: AMERON ALUMINUM ELLIPTICAL CLAMP ON ARM MODEL #681AEC10PAA WITH 1" DIA. WIREWAY ENTRANCE HOLE @ 0°
OR APPROVED EQUAL
FOLIUM W/ BALL CAP ASSEMBLY MODEL #45345PA
WITH PROVISION FOR SINGLE BELL RECEPTACLE
OR APPROVED EQUAL
(RECEPTACLE ONLY WHEN
SPECIFIED ON PLANS)
42" (8' ARM)
55" (10' ARM)
FIXTURE – GARDCO FIXTURE
OPTIONAL DOUBLE ARM
15"
NOTE: POLE TOP REDUCED FROM 6" OCT.
TO 5-1/2" OCT. X 9" L
NOTE: GENERALLY, 8' ARMS SHALL BE USED FOR ROADSIDE
INSTALLATIONS ON STREETS WITH LESS THAN 100' RIGHTS-OF-WAY
10' ARMS SHALL BE USED WHEN POLES ARE INSTALLED WITHIN
MEDIANS AND ON STREETS WITH 100' OR GREATER RIGHTS-OF-WAY
(BANNER ARMS ONLY WHEN SPECIFIED ON PLANS)
(2) THREADED INSERTS
(1/2"-13NC AT 0° & 180°)
STAINLESS STEEL
BANNER ARMS
FOR 1.5'X5' BANNERS
TO BE DELIVERED BY
CONTRACTOR TO CITY YARD
HANDHOLE OPENING
3-1/2"x5"x9-1/2" LG.
W/ GROUNDED ALUMINUM COVER
(PAINTED BLACK SEMIGLOSS)
SPECIAL DOOR SIZE "LV" DOOR #43436PA
COVERS MUST FACE STREET OR SIDEWALK
AND MUST BE OF THE (2) SCREW TYPE;
(4) SCREW COVERS WILL NOT BE ACCEPTED.
10'-0"
26'-7" CONCRETE POLE MANUFACTURED PER ASTM
C-1089-97 SPECIFICATIONS
SINGLE ARM – AMERON CONCRETE POLE #681-26 (12)
DOUBLE ARM – AMERON CONCRETE POLE #681-26D (12)
POLE SHALL BE BLACK, NATURAL, EXPOSED FINISH WITH
AMERSHIELD ANTI-GRAFFITI COATING
OR APPROVED EQUAL
8-1/2" OCT.
9-3/4" OCT.
TOP OF BOLT TO BE 1-1/2" BELOW GRADE IN SIDEWALK
AREA. BOLTS ARE REQUIRED TO HAVE 1-1/2" OF
CONCRETE COVER IN LANDSCAPE AREA.
CRASH CAP 4" MIN 1-1/2" CONCRETE
COVER OVER TOP OF ANCHOR BOLTS
GREASE BASE AND ANCHOR BOLTS PRIOR
TO POURING CONCRETE CAP (36" SQ. CAP)
SIDEWALK TO HAVE 2% CROSS SLOPE. SLOPE CONCRETE
AWAY FROM POLE IN LANDSCAPE AREAS. SEE BASE
DETAIL BELOW FOR SIDEWALK AREAS.
5"
11"
FINISH GRADE
BASE PLATE
21" B.C. (±1/2")
#3 TIES @ 12" O.C.
(3) #3 OR (2) #4 TIES
WITHIN TOP 5" OF THE PIER
(4)-1"ø X 36" X 4"ANCHOR BOLTS (A-307) W/
(2) NUTS & WASHERS PER STANDARD SPECIFICATIONS
(ALL HARDWARE SHALL BE GALVANIZED)
24" MIN
36" MAX
#4 COPPER GROUND
(MAY BE EITHER STRANDED OR SOLID WIRE)
CONNECT TO ANCHOR BOLTS AND GROUND PLATE
2" CONDUIT & WIRE AS
INDICATED ON PLAN
(6) #4 VERTICAL REBAR
LENGTH AS REQUIRED
REINFORCED CONCRETE FOUNDATION
(3000 PSI CONCRETE)
6"
APPROVED GROUND PLATE
(2) LAYERS OF 15# FELT ON TOP
2'-6"
ROUND
STREETLIGHT BASE
4" MIN. CONC.
CRASH CAP. 32"SQ.
HANDHOLE
GREASE BASE AND
BOLTS PRIOR TO
POURING CAP.
SIDEWALK FINISH
GRADE
4"MIN.
1-1/2" CONC. COVER
OVER ANCHOR BOLTS
FOUNDATION
BASE DETAIL
(SIDEWALK AREA)
20" SQ.
X 3/4" PL.
18" OCTAGONAL
21" B.C. (±1/2")
(4) 1-1/4"x1-3/4"
LONG SLOTS
BASE DIAGRAM
SPECIFICATION REFERENCE
STANDARD DRAWINGS
CITY OF LAS VEGAS, NEVADA
STREET LIGHT POLE
SCALE: N.T.S.
DATE: 10-14-2008
DWG. NO. 303-DC/TC

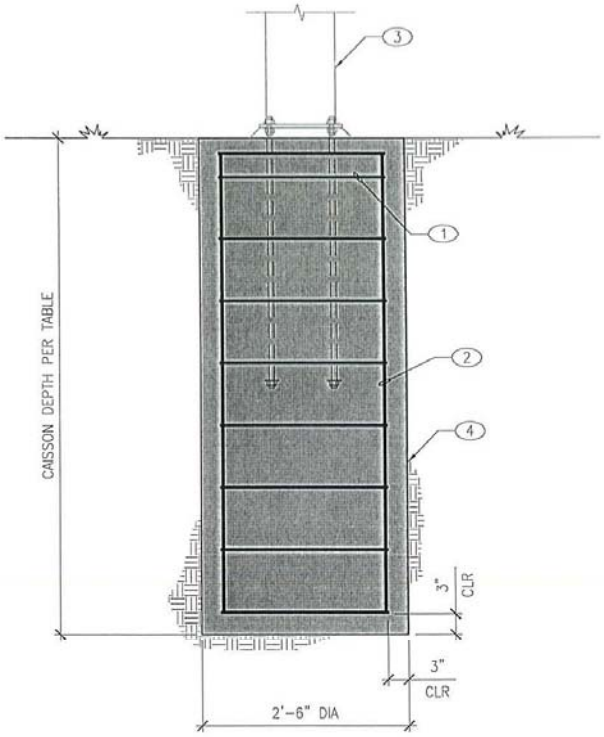

KEYNOTES:

1. (2) #4 TIES IN TOP 6" AND AT 9" O.C. (Fy = 60 KSI)
2. (9) #6 VERTS DISTRIBUTED EVENLY AROUND PERIMETER. (Fy = 60 KSI)
3. LIGHT POLE AND ANCHORAGE BY OTHERS
4. 4500 PSI MIN CONCRETE CAISSON

NOTES:

A. LUMINAIRE EFFECTIVE PROJECTED AREA (E.P.A) = 1.9 FT^2

B. ALL LOADS DETERMINED USING AASHTO STD SPECS FOR STRUCTURAL SUPPORTS FOR HIGHWAY SIGNS, LUMINAIRES, AND TRAFFIC SIGNALS (2009 ED. W/ 2011 INTERIM REVISIONS)

C. ALL POLE BANNER AREAS HAVE BEEN OMITTED FROM THE ANALYSIS. "BREAKAWAY HINGES" SHALL BE USED FOR THE ATTACHMENT OF THE BANNER TO THE POLE.

LIGHT POLE CAISSON DEPTH (AASHTO METHOD)

AMERON LIGHT POLE	BASE SHEAR (KIPS)	BASE MOMENT (K-FT)	SOIL TYPE			
			SAND/GRAVEL ϕ MIN = 30° γ = 110 PCF	STIFF CLAY (COHESION,C=1.0 KSF)	MEDIUM CLAY (COHESION,C=0.600 KSF)	SOFT CLAY (COHESION,C=0.250 KSF)
6B1-21 DUAL 10' ARM	0.67	11.06	4'-8"	6'-6"	7'-4"	9'-6"
6B1-26 SINGLE 12' MAX ARM	0.72	13.23	5'-0"	6'-9"	7'-8"	10'-0"
6B1-26 DUAL 12' MAX ARM	0.88	18.30	5'-6"	7'-3"	8'-4"	11'-0

NOTES:

A. TABLE VALUES REFLECT A 3.0 FACTOR OF SAFETY USED IN THE BROHM'S DRILLED SHAFT DESIGN EQUATIONS.

B. SOIL TYPE SHALL BE DETERMINED BY TAKING UNDISTURBED SAMPLES. PROJECT ENGINEER SHALL DETERMINE NUMBER OF REQUIRED SAMPLES.

PROFESSIONAL ENGINEER-STATE OF NEVADA
GREG A. MEYER
EXP. 12-31-13
CIVIL/ STRUCTURAL
No.015053

LIGHT POLE CAISSON

NO SCALE

JUL 23 2012

ENGINEERING SYSTEM SOLUTIONS
7512 W. CHEYENNE AVE, STE #1
LAS VEGAS, NEVADA 89129
Phone: (702) 616-3107
Fax: (702) 616-3725
www.es2eng.com

PROJECT: LIGHT POLE CAISSON
LAS VEGAS, NV

PROJECT NUMBER: STR12.1026 ASA2

DATE: 7/17/2012

SHEET NUMBER: S1

REVISED PROPOSAL

REV.	DATE	DESCRIPTION	DRN.	APPR.
D	10/02	REDRAWN, ADDED DOOR P/N#, CHG'D TO CLAMPS. & CHG'D TO MOD 8D	M.L.	

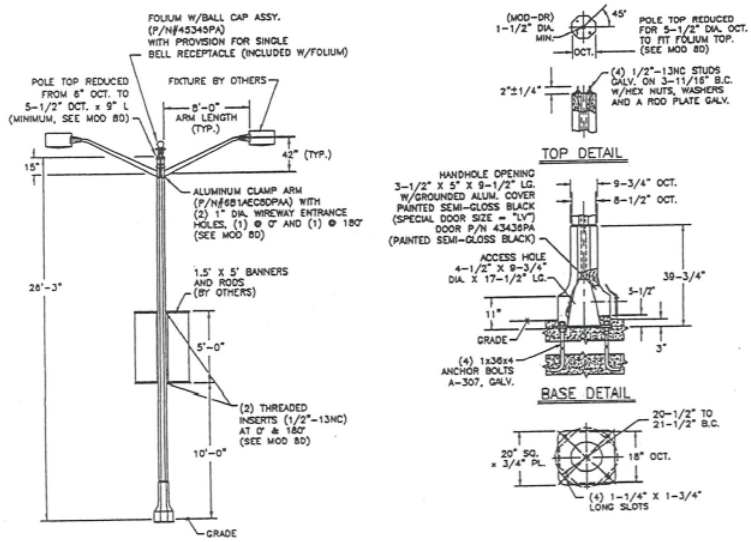

( ) POLES REQUIRED, EACH WITH 45345PA & 6B1AEC8DPAA ASSEMBLIES.

NOTES:
1. CONCRETE MIX (12I): BLACK, NATURAL, EXPOSED FINISH WITH AMERSHIELD ANTI-GRAFFITI COATING.
2. f'c @ 28 DAYS = 6,000 PSI, USING SPUN CYLINDER TEST.
3. f'c @ 28 DAYS = 5,000 PSI, USING ASTM C-31 CYLINDER TEST.
4. POLES MANUFACTURED PER ASTM C-1089-97 SPECIFICATIONS.
5. BASEPLATE ASTM A-36 FULLY PRESTRESSED WITH (8) 5/16" DIA. A-416 WIRES (7-STRAND CABLES).
6. SPECIAL DOOR SIZE = "LV" (DOOR WITH GROUNDING BOLT).
7. MOD DR: DRILL RACEWAY FOR MINIMUM CLEARANCE.
8. MOD 8D: DOUBLE ARM CABLE ENTRANCE, DOUBLE BANNER INSERTS, & REDUCED TOP DIAMETER.
9. DOOR PAINTED SEMI-GLOSS BLACK (PA).

APPROVED BY DATE

Ameron POLE PRODUCTS & SYSTEMS

PLS -- CITY OF LAS VEGAS STANDARDS
6B1-26 (12I) POLE WITH DOUBLE 8' LMA ASSEMBLY

THIS DOCUMENT CONTAINS INFORMATION WHICH IS PROPRIETARY TO AMERON. IT SHALL NOT BE REPRODUCED, USED OR DISCLOSED TO ANYONE WITHOUT THE PRIOR WRITTEN PERMISSION OF AMERON.

DRAWN: G.C.	07/98	SCALE N.T.S.	DWG. NO. SK074598	REV D
CHK'D:				

REV.	DATE	DESCRIPTION	DRN.	APPR.
A	9/02	ADDED DOOR P/N	RS	MJC

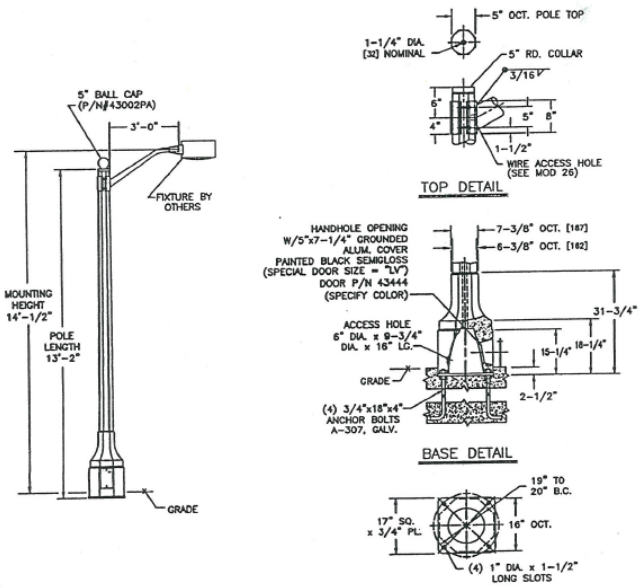

( ) POLES REQUIRED WITH MOAEC3PAA LMA ASSEMBLY.

NOTES:
1. CONCRETE MIX (12I): BLACK, NATURAL, EXPOSED FINISH WITH AMERSHIELD ANTI-GRAFFITI COATING.
2. f'c @ 28 DAYS = 6,000 PSI, USING SPUN CYLINDER TEST.
3. f'c @ 28 DAYS = 5,000 PSI, USING ASTM C-31 CYLINDER TEST.
4. POLES MANUFACTURED PER ASTM C-1089-97 SPECIFICATIONS.
5. BASEPLATE ASTM A-36 FULLY PRESTRESSED WITH (4) 5/16" DIA. A-416 WIRES (7-STRAND CABLES).
6. SPECIAL DOOR SIZE = "LV" (DOOR WITH GROUNDING BOLT).
7. MOD 26: WIRE ACCESS HOLE FOR CLAMP ARM.
8. SPECIFY DOOR COLOR.

APPROVED BY DATE

Ameron POLE PRODUCTS & SYSTEMS

PLS -- CITY OF LAS VEGAS STANDARDS
5B7-13 (12I) POLE WITH 3' LMA ASSEMBLY

THIS DOCUMENT CONTAINS INFORMATION WHICH IS PROPRIETARY TO AMERON. IT SHALL NOT BE REPRODUCED, USED OR DISCLOSED TO ANYONE WITHOUT THE PRIOR WRITTEN PERMISSION OF AMERON.

DRAWN: M.L.	08/02	SCALE N.T.S.	DWG. NO. SK084802	REV A
CHK'D:				

ITEM #16

623 L.03.03 ELECTRICAL TESTING

ADD THE FOLLOWING PARAGRAPH TO THIS SUBSECTION:

B. The Contractor shall be required to submit record drawings prior to any inspections being performed. He and/or his representative shall be present at the project location during the maintaining agency's inspection of the streetlight installation.

END OF SECTION 623

SECTION 628 – TRAFFIC STRIPING, PAVEMENT MARKINGS, AND CURB MARKINGS

DESCRIPTION

628.01.01 GENERAL

ADD THE FOLLOWING TO THIS SUBSECTION:

D. Prior to using any material, the Contractor shall provide the Engineer with a written "Certification of Compliance" from the manufacturer of the material. The certification shall include the manufacturer's name, business address and location of the manufacturing plant. It shall identify the specifications and include one copy. It shall show the quantity of materials supplied for each color, batch number and date of manufacture.

E. Manufacturer's lab test results must be supplied upon request of the Engineer.

MATERIAL

628.02.01 MATERIALS FOR TRAFFIC STRIPING, PAVEMENT MARKING AND CURB MARKING

DELETE PARAGRAPH "E.2" AND REPLACE WITH THE FOLLOWING:

E. 2. If, for any reason, the markings fail to perform as specified, the Contractor, under this warranty, shall completely remove the old markings and apply new markings at no additional cost to the Contracting Agency. Removal shall be by wet sandblasting or other method authorized by the Engineer.

ADD THE FOLLOWING TO THIS SUBSECTION:

F. No pavement marking material shall be used which is not on the Qualified Products Lists (QPL) established by the Nevada Department of Transportation (NDOT) unless otherwise specified.
   1. Liquid Pavement Marking (LPM) shall be either a polyurea or epoxy paint formulation.
   2. Pavement Marking Film shall be Type II from the NDOT QPL

G. The following materials are acceptable for parking lots:
   1. Ennis # 985691 Paint, Traffic RD White
   2. Ennis # 985697 Paint, Traffic RD Yellow
   3. Ennis # 985154 Paint, Traffic RD Red (for Curb)
   4. Vista Paint # 6800 On-Line Semi-Gloss Traffic Marking Paint Blue (for Handicap parking)

H. The following materials shall be used for replacement of the existing green bike lane on Bonneville Avenue, east of Grand Central Parkway only:
   1. Catek, Inc., T-28 Acrylic Based Resin System and Anti-Skid Surfacing

I. All other new green bike lanes constructed with the Project shall be Preformed Thermoplastic Green Bike Lane Material, shall be a minimum thickness of 90 mils (2.29mm), and per the NDOT QPL.

628.03.02 EQUIPMENT

DELETE PARAGRAPH "G" AND REPLACE WITH THE FOLLOWING:

G. Preformed Thermoplastic markings require sealers and the use of a propane torch or radiant heater as recommended by the manufacturer to fuse markings to asphalt and Portland cement concrete pavements by means of heat.

CONSTRUCTION

628.03.04 PREPARATION OF EXISTING SURFACES

ADD THE FOLLOWING TO THIS SUBSECTION:

D. Areas receiving slurry seal will be allowed to fully cure for a minimum of ten (10) days before application of the crosswalks, stop bars, arrows, epoxy or painted bike lanes and symbols and permanent raised pavement markers.

ADD THE FOLLOWING SUBSECTION TO THIS SECTION:

628.03.70 TEMPORARY MARKINGS

A. When otherwise not shown on the plans, detour transitional traffic line striping shall have a minimum taper of 20:1 for temporary striping and 30:1 for permanent striping. Temporary traffic lanes shall be at least ten (10) feet (3 meters) wide and no lane shall encroach within five (5) feet (1.5 meters) of an open excavation or within two (2) feet (0.7 meters) of longitudinal curb.

END OF SECTION 628

SECTION 630 – SANITARY SEWERS

DESCRIPTION

630.01.01 WORK INVOLVED

ADD THE FOLLOWING TO THIS SUBSECTION:

B. This work shall consist of construction of a wastewater collection pipe and sanitary sewer manholes as shown on the Contract Drawings.

C. This work shall also consist of removing and replacement of an existing sewer manhole. In such case, the manhole will be removed in such a manner that the flow of the existing sewer is maintained.

D. This work shall also consist of preparing utility final location information as described on the project drawings and in Section 622 of these Special Provisions.

ADD THE FOLLOWING SUBSECTION TO THIS SECTION:

630.01.70 STANDARDS

A. All sanitary sewer improvements shall be constructed in accordance with the Southern Nevada Design and Construction Standards for Wastewater Collection Systems, most recent edition.

MATERIALS

ADD THE FOLLOWING SUBSECTION TO THIS SECTION:

630.02.02 MANHOLES

E. Cast-in-place and precast manhole bases will be allowed for new construction of sewer pipe.

CONSTRUCTION

ADD THE FOLLOWING SUBSECTION TO THIS SECTION:

630.03.70 MANHOLE ADJUSTMENT

A. When adjusting manholes, all components must be set in a bed of grout: Burke Type V nonmetallic, nonshrink. Burke can be mixed with equal parts of sand and Type V cement for components, but shall be used full strength in pipe inverts.

B. Range of grade ring height allowed for new manhole construction or existing manhole adjustment shall be 0 to 12 inches in accordance with the Design and Construction Standards for Wastewater Collection Systems, Drawing No. SD-5.

C. Class A concrete collars for sanitary sewer manholes shall be constructed in accordance with the Design and Construction Standards for Wastewater Collection Systems, Drawing No. SD-4.

D. When adjusting manholes, Contractor shall install plywood covers in sanitary sewer manhole inverts as well as steel plate covers over manholes (after manhole rings/frames are removed) to prevent debris from entering sewer manholes and corresponding lines. Debris in the manholes shall be removed prior to plywood removal. Plywood and steel covers for manholes shall be installed and removed in the presence of the CITY utilities inspector. All debris dropped into the sewer manholes and corresponding lines shall be retrieved at Contractor's expense. Contractor shall clean (e.g., jet vac or equivalent) the debris out of the affected manholes and/or sewer lines in the presence of the City's representative and approved by the Owner.

END OF SECTION 630

SECTION 699

SITE FURNISHINGS

DESCRIPTION

699.01.01 GENERAL

A. For Local Public Agency Infrastructure along Martin Luther King Boulevard, Grand Central Parkway, Charleston Boulevard, Alta Drive and other City maintained streetscapes, the Design Build Contractor shall follow the design Standards set forth in the City's Downtown Centennial Plan Standards with the exceptions set forth in this Special Provision and/or as shown on the plans.

B. This special provision covers the quality and kind of materials to be used in the installation of:
   1. Street Benches
   2. Trash Receptacles
   3. Bike Racks
   4. Tree Grate
   5. Sidewalk Concrete Finish

MATERIALS

699.02.01 STREET BENCHES

A. Street benches shall meet the requirements of the attached detail herein.

699.02.02 TRASH RECEPTACLES

A. Street benches shall meet the requirements of the attached detail herein.

699.02.03 BIKE RACKS

A. Bike rack shall use "hoop rack" design, be powder coat finish with blue color manufactured by Dero Bike Rack Co., American Bicycle Security Company, or approved equal.

699.02.04 TREE GRATE

A. Tree grates shall follow the City's Downtown Centennial Plan Standards.

699.02.05 SIDEWALK AND ALLEY CONCRETE FINISH

A. Sidewalk panels shall be 5'x5' window pane style gray concrete with broom finish edging.

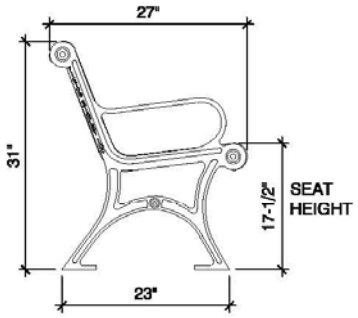

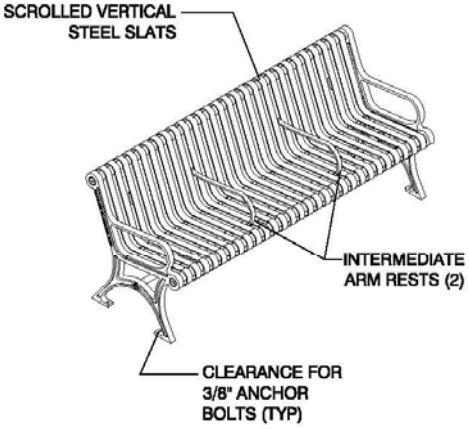

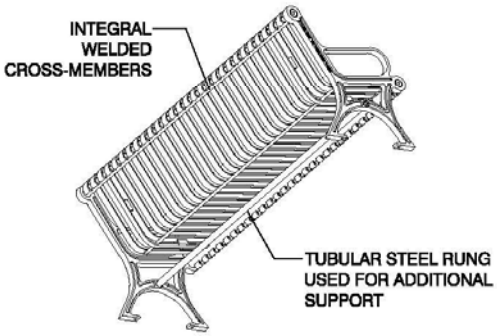

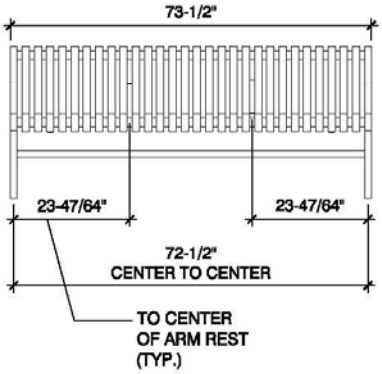

NOTES:

1. ALL FABRICATED METAL COMPONENTS SHALL BE STEEL SHOTBLASTED, ETCHED, PHOSPHATIZED, PREHEATED, AND ELECTROSTATICALLY POWDER-COATED WITH T.G.I.C. POLYESTER POWDER COATINGS. PRODUCTS SHALL BE FULLY CLEANED AND PRETREATED, PREHEATED AND COATED WHILE HOT TO FILL CREVICES AND BUILD COATING FILM. COATED PARTS SHALL THEN BE FULLY CURED TO COATING MANUFACTURER'S SPECIFICATIONS. THE THICKNESS OF THE RESULTING FINISH COAT AVERAGES 8-10 MILS.
2. IT IS NOT RECOMMENDED TO LOCATE ANCHOR BOLTS UNTIL BENCH IS IN PLACE. PERMANENTLY AFFIX TO THE GROUND. CONSULT YOUR LOCAL CODES FOR REGULATIONS.
3. ANCHOR BOLTS TO BE PROVIDED BY CONTRACTOR.

N.T.S.

F:\PW_ENG_DESIGN\DESIGN\DESIGN\CENTENNIAL STANDARDS\DWG\FOR GINA\DOWNTOWN_STEEL_BENCH.DWG

12/16/14

DEPARTMENT OF PUBLIC WORKS CAPITAL PROJECT MANAGEMENT DATE: DEC 2014 DRAWN BY: BP SHEET: 1 OF 1	CITY OF LAS VEGAS STANDARD DRAWING DOWNTOWN STEEL BENCH

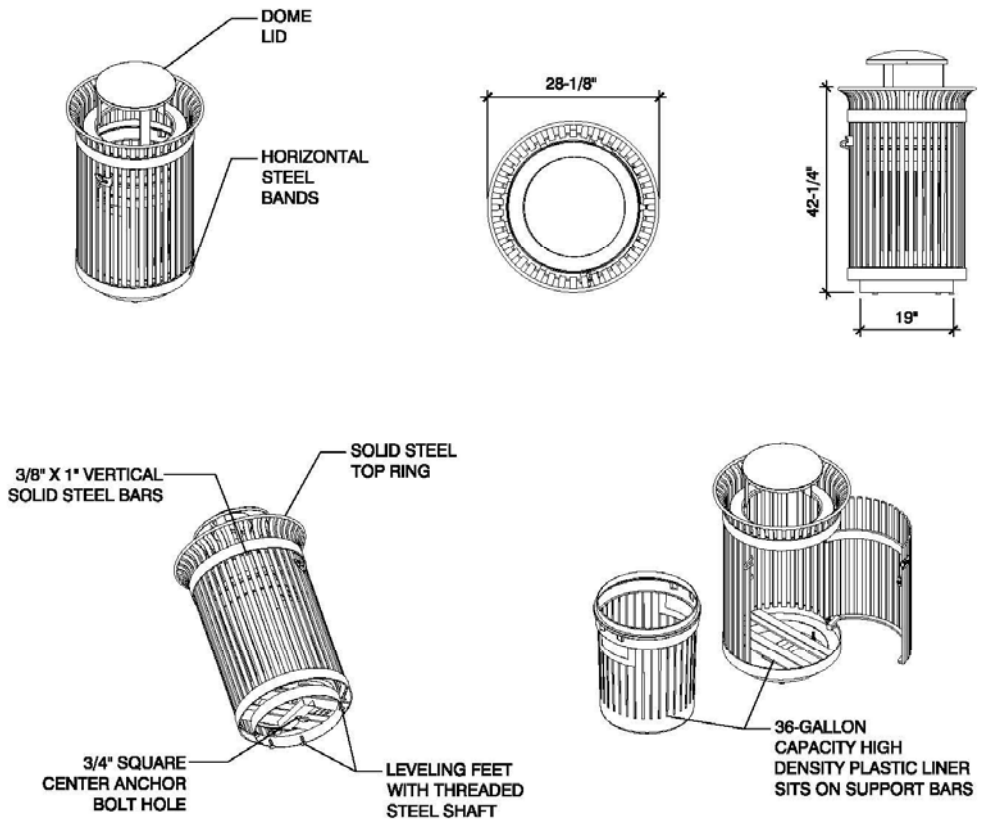

NOTES:

1. ALL FABRICATED METAL COMPONENTS SHALL BE STEEL SHOTBLASTED, ETCHED, PHOSPHATIZED, PREHEATED, AND ELECTROSTATICALLY POWDER-COATED WITH T.G.I.C. POLYESTER POWDER COATINGS. PRODUCTS SHALL BE FULLY CLEANED AND PRETREATED, PREHEATED AND COATED WHILE HOT TO FILL CREVICES AND BUILD FILM COATING. COATED PARTS SHALL THEN BE FULLY CURED TO COATING MANUFACTURER'S SPECIFICATIONS. THE THICKNESS OF THE RESULTING FINISH AVERAGES 8-10 MILS.
2. OIL IMPREGNATED BRONZE BUSHINGS AND STAINLESS STEEL PIVOT PINS FOR DOOR MOVEMENT, STAINLESS STEEL KEYED LOCK ASSEMBLY.
3. PERMANENTLY AFFIX TO THE GROUND PER MANUFACTURER'S INSTRUCTIONS. CONSULT YOUR LOCAL CODES FOR REGULATIONS.
4. PROVIDE PLASTIC INNER LINER MANUFACTURED BY TRASH RECEPTACLE MANUFACTURER.
5. CONTRACTOR SHALL PROVIDE ANCHOR BOLT.

N.T.S.

DEPARTMENT OF PUBLIC WORKS CAPITAL PROJECT MANAGEMENT DATE: DEC 2014 DRAWN BY: BP SHEET: 1 OF 1	**CITY OF LAS VEGAS** **STANDARD DRAWING** **DOWNTOWN** **STEEL TRASH RECEPTACLE**

F:\PW_ENG_DESIGN\DESIGN\DESIGN\CENTENNIAL STANDARDS\DWG\FOR GINA\DOWNTOWN_STEEL_BENCH.DWG

12/16/14

END OF SECTION 699

32 80 00 Irrigation

Irrigation. Design irrigation systems, drainage, and turf layouts to prevent water from:
1. Staining, spotting, or otherwise creating a noticeable pattern on adjacent materials.
2. Causing deterioration of adjacent surfaces.
3. Draining through or over surfaces including all sporting and play activity surfaces.

Irrigation Period. Provide sufficient capacity and pressure to irrigate all turf areas during a 6-hour water window. (Drip irrigation may extend beyond this period if necessary)

Irrigation Water Audit. Include a landscape audit in the specifications if the design contains more than 1,000 square feet of turf. Include in the Construction Documents a requirement that the audit be conducted in the presence of the Owner's parks representative and approved by the Owner prior to the installation of any turf.

> All overhead-irrigated landscape areas shall have a Landscape Irrigation Audit performed by a Certified Landscape Irrigation Auditor, certified and in good standing with the Irrigation Association (IA). The auditor shall be independent of the property owner and all contractors associated with the project. The audits will be conducted in accordance with the current edition of the IA's Landscape Irrigation Auditor's handbook. The minimum efficiency requirements to meet in the audit are 65% distribution uniformity for all fixed spray systems and 70% distribution uniformity for all rotary systems. The results of the audit shall be provided to the Owner in a report acceptable to the Owner and shall be signed by the Auditor. The report shall include controller number and location, station numbers, station locations, sprinkler head locations and distance between sprinkler heads, pressure reading per station, catch device readings and locations, distribution uniformity for individual stations, precipitation rates per station, and a 12 month irrigation schedule (runtimes per cycle, cycles per day, and days per week for each station). Compliance with this provision is required before the Owner will issue Final Payment to the Contractor.

Rain Bird Rewards Program. Insert the following language into the irrigation specification:
The City of Las Vegas currently participates in the Maxicom Dollars Program. Under this rewards program, the City receives Maxicom Dollars for all Rain Bird products/components purchased for installation on City facilities, streetscapes and parks by its contractors/subcontractors. All invoices showing proof of purchase of Rain Bird products/components must be submitted to by the Contractor or landscape subcontractor to an Authorized Rain Bird Distributor (Horizon Distributors, 4224 Wynn Rd., 362-4224, formerly Turf Equipment Supply Company) on behalf of the City for acceptance of rewards. Purchases must be submitted within the same calendar year that the products listed are purchased. The Contractor or landscape subcontractor must submit a written receipt of confirmation from distributor that the guidelines for the program were followed and credits for rewards were issued to the City of Las Vegas, before the City will issue Final Payment to the Contractor. Failure of the Contractor to comply with this program will result in a reduction in the Contract Sum due the Contractor equal to 5% of value of all Rain Bird products used on the Project.

Point of Connection. Size of Service shall vary based upon the system requirements and demands. It is highly recommended that the size of the meter and mainline be sized adequately to run multiple valves concurrently. (See Irrigation Period Above) Refer to the Las Vegas Valley Water District's Uniform Design Standards for Water Distribution System Plate Numbers for installation. Review each site individually for adherence to a six-hour water window and future expansion.

RPPA/Backflow Preventor. Size of Reduced Pressure Principle Assembly/Backflow Preventor shall vary based upon the system requirements and demands. It is highly recommended that the RPPA/Backflow Preventor be sized adequately to run multiple valves concurrently. (See Irrigation Period Above) Refer to

the Las Vegas Valley Water District's Uniform Design Standards for Water Distribution System Plate Numbers for installation. Install all Reduced Pressure Principle Assembly/Backflow Preventor's upstream of the pump station.

In addition to the RPPAs required at the water meter connection locations, install on-site RPPAs upstream of any irrigation pumps to isolate the irrigation system from on-site potable water systems including water features, splash pads, pools, drinking fountains, and buildings. Do not use pressure vacuum breakers, double check valve assemblies or other less stringent methods of isolation for this purpose even if allowed by code. Double check vale assemblies are acceptable for hose connections to the potable water system.

If one water meter and RPPA is used for both irrigation and potable systems, it must be "upsized" to compensate for the two RPPAs that would otherwise be required.

Master Valve. Do not install master valves for parks.

Flow Sensor. Data Industrial IR-220B flow sensor, Smith-Blair model 315 service saddle (or approved equal) with 2" NPT tap for pipe connection. Install flow sensor in concrete valve box with metal lid. Flow sensor shall be installed in a straight run section of pipe, with 10 times pipe diameter upstream and 5 times pipe diameter downstream of the flow meter to achieve proper flow regime. Wire to output decoder installed in CCU per manufacturer's recommendations. Pump station to have GMP display built in.

Sensor Cable. Belden Model 9883, as recommended by the flow sensor manufacturer from the control system pulsed decoder to the flow senor.

Decoder. Data Industrial Model 600-15 Pulse Output transmitter and Rain Bird Pulse Decoder. Install per manufacturer's requirements.

Booster Pump. Link to typical setup.

General Note. Provide adequate clearance for Owner's personnel to perform required maintenance.

General Requirements. Prefabricated pumping station, completely piped, wired, hydraulically and electrically tested on a structural steel skid before shipment to the job site. All components of the pumping system shall be designed to function in an outdoor environment exposed to all the elements. Furnish protective enclosure and cover as required for proper operation of the system. Pump station shall include skid assembly to support all components as the installed mounting base. Base shall be of sufficient size and strength to resist twisting and bending from hydraulic force and support the full weight of the pump and motor. Pump station manufacturer shall provide a factory-trained technician to supervise the installation of the pump station, pumps, and motors. Provide a minimum of one-day of training for Owner's staff in the operation, maintenance and programming of the system. Pump station components shall be supplied by and be the responsibility of one manufacturer, even though some components made are manufactured by others. Provide alternating starts for systems with two or more pump motors.

PSI shall be regulated by the use of variable frequency drives (VFD) or full size pressure reducing/sustaining valves (PRV, Clay or Bermad are acceptable.

Variable Frequency Drives. VFDs should be considered for pumps that are both:

- Used more than 1,000 hours per year, and
- 5 Horsepower or larger.
- Rated to 50° C
- Furnish a variable frequency drive that is IGBT based with selectable carrier frequency up to 15kHz. The VFD shall include terminals for incoming power, motor output power, and control terminals.

- The VFD shall generate a sine-coded, variable voltage / frequency, three phase output for optimum speed control. The VFD shall incorporate power loss ride-through for a minimum of two seconds. VFD protective features shall include current limit, short circuit protection, electronic motor overload protection, and ground fault protection.
- The VFD shall be protected on the primary side by fuses of the appropriate amperage.

  VFDs may be used for smaller less used pumps if the designer can demonstrate to the city that the advantages of a VFD for the application (power savings, soft starts and stops, future flow changes, single phase power use) outweighs the added cost. The designer is responsible to calculate that the life-cycle cost of the VFD is less than a PRV for the application.

  Pump stations with less than 60 psi N.P.S. shall have secondary means of pressure regulation when primary means are VFD. If over 60 psi, a full main size bypass is required.

Select VFD pumps and motors that require:

-
- Motor lead lengths within the manufacturer's recommendation (critical for smaller motors).
- A motor that is specifically designed for VFD applications (voltage spike insulation). Avoid 460V standard motors especially under 10 HP (230V standard motors may be acceptable).
- NEMA MG-1-1993, Part 31.40.4.2 (peak voltage of 1600 volts and a minimal rise time of 0.1 microseconds for motors rated less than 600 volts) when utilizing Insulated Gate Bipolar Transistors (IGBTs).

Pump Walled Enclosures. To be avoided, see Section 01 00 30 Park Design.

Acceptable Pump Manufacturers

Watertronics, 525 E Industrial Drive, Hartland, Wisconsin, 53029, 262-367-5000

Xylem Flowtronex Pumping Systems, 10661 Newkirk Street, Dallas, Texas 75220, 469-221-1200

Or Owner's approved equal

Pumps. Pumps shall be electric motor driven, close coupled, horizontal centrifugal with a self-adjusting type mechanical shaft seal. Pump and motor shall be constructed so that the motor and entire rotating element can be removed from the casing without disturbing the piping. All pump flanges shall have 150 PSI rating. Pump casing shall be constructed from cast or ductile iron. The impeller shall be enclosed, single piece bronze casting, completely machined on all outside surfaces, and statically balanced at the time of pump assembly. The impeller shall be keyed to the shaft and securely fastened. Bearings shall be roller or ball type of sufficient size to withstand the radial and axial thrust loads incurred during service. Shaft shall be stress-proof steel accurately machined and polished to transmit full fiver output. Shafts shall be protected by a renewable shaft sleeve. The coupling shall be designed to transmit full horsepower and torque load. Pump skid/base shall be of sufficient size and strength to resist twisting and bending from hydraulic forces and support the full weight of pumps and motors. Manufacturer shall provide and furnish performance data for the pumps.

Motors. Pump motors shall be squirrel cage induction horizontal solid shaft type. The temperature rise of the motor shall be to NEMA standard MG-1.12.42 for class B or class F insulation. Motors shall be inverter duty rated for continuous operation with a variable frequency drive controller. Furnish motors wired shall be capable of full voltage as required by local regulations. Motors shall be of proper size to drive the pump at any point on its operation curve without exceeding motor horsepower rating. Motors shall be manufactured under NEMA standards, or an approved equal.

Piping. Pump piping shall conform to ASTM specifications A53 for Grade B welded or seamless pipe. All piping shall be Schedule 40. All welding flanges shall be forged steel with slip-on or welding neck type. All welding fittings shall be seamless, conforming to ASTM specification A234, with pressure rating not less than 150 PSI. All piping shall include vitaloc and ductile iron flange piping. Intake Piping: Furnish intake lines for all pumps constructed and fabricated from Schedule 40 carbon steel pipe, and equipped with isolation valves at each pump.

Dogleg Piping: Coat interior of all pump station dogleg drop piping using Scotch Kote 134 or equal fusion bonded epoxy coating prior to shipment of the skid. Apply coal tar epoxy coating and install polyethylene encasement (polywrap) on all steel piping below grade.

Electronic Ball Valves. Pump station manufacturer shall provide a simple switch by-pass back-up mode for constant pressure regulation in the event of VFD failure. The back-up mode shall automatically function on the fly during an event of a VFD failure, without loss of irrigation. The VFD back–up mode must provide constant pressure at variable flow without causing line surge. Utilizing the pressure relief valve is not an acceptable automatic back up mode due to its inability to provide surge free constant pressure regulation at variable flow demand. The automatic VFD by-pass mode shall be either controlled hydraulically through a pressure-regulating valve per pump or EBV (electronic butterfly valve(s).

The pump station discharge pressure shall be regulated to provide surge-free constant pressure as programmed via the control panel operator interface. Discharge pressure shall be regulated by an Electronic Butterfly Valve, consisting of the following:

a. Gradual entry of water from the EBV pump into the discharge manifold to allow for complete purging of pump column air and elimination of surges.

b. Maintain programmed downstream pressure regardless of discharge flow.

c. Up to six, user adjustable PID control settings to ensure accurate pressure regulation at all flows, programmed pressure, or connected pump combination.

d. Adjustable pressure ramp-up and ramp-down to assure surge free pressure regulation.

e. After a drop in pressure, gradually increase system pressure over a user adjustable period of time to eliminate surging.

f. Rate of change of pressure control to anticipate and eliminate rapid pressure changes caused by changing system demand.

Adjustment of regulated downstream pressure shall be accomplished though the control panel operator interface. Individual pressure regulating valves shall be butterfly type with electric motor gear actuation. The maximum allowable pressure drop across the butterfly valve at full pump capacity shall not exceed one PSI. The Butterfly Valve shall be rated for not less than 285 PSI.

Drain Valves. Drain valves shall be provided at all low points in the system. Drain relief valves shall be piped to the outside of the pump enclosure, so that no water drains on the deck floor/skid plate.

Check Valves. Pump check valves shall be silent operating, non-slam type, cast iron bodied with bronze and stainless steel trim. Sealing surfaces shall utilize resilient Buna-N rubber. The valve design shall incorporate a center guided, spring loaded poppet, guided at opposite ends and having a short linear stroke that generates a flow area equal to the pipe diameter. Valves shall be sized to permit full pump capacity to discharge through them without exceeding a pressure drop of 2.5 PSI. Furnish check valves on the discharge of each pump.

Isolation Valves. Valves shall be butterfly type with the position lever or gear hand wheels and rated at 200 PSI working pressure. Trim shall include stainless steel stem, bronze streamlined disc, and full faces resilient seat. Isolation valves shall be installed on each pump inlet and outlet and on the discharge manifold.

Pump Bypass. Furnish pump bypass piping to operate the system for quick coupler requirements or in the event of power failure. Bypass shall be sized to full main line diameter with positive closing gate valve accessibility.

Gauges. Provide pressure gauges at appropriate location to read inlet pressure and discharge manifold pressure. Gauges shall be liquid filled, at least 2.5” in diameter, constructed with a stainless steel case, brass or bronze internals, and are vibration/pulsation dampened. Furnish ball valves installed below each gauge to provide total isolation of pressure gauges.

Electrical Enclosures. The electrical controls shall be mounted in a self contained NEMA 4 enclosure fabricated from not less than 12 gauge steel. Door gasket seals shall be neoprene sponge, sufficient to protect interior components from weather and dust. Door panels shall be constructed from 12-gauge steel with integral locking screws and latches. Operating handle for power disconnect shall be provided on the front of the panel. All external-operating devices shall be dust and weatherproof. All internal components of the enclosure shall be mounted on removable back panels. Mounting screws for components shall not be tapped in the panel enclosure. All internal wiring within, and interconnecting between, the panels shall be complete and no field wiring within the panels shall be required. Wiring troughs and cables raceways shall be self-contained within the enclosure and no external cable trays or wiring troughs are permitted. No pressure gauges, pressure switches, water activated devices, or water lines of any sort shall be installed in any electrical control panel.

Pump Motor Starters, Disconnect and Electrical Switch Gear. Pump motor starters shall be contained within a single NEMA 12 enclosure with a single access door and main disconnect. Each starter shall be protected on each power leg by a time delay fuse of the appropriate amperage. Motor starter coils shall be 240-460 volt operated. Overload relays shall be ambient-compensating type installed on each power leg and shall be set to trip at 105% of motor full-load current rating.

Master Control and Display Panel. Master control and display panel shall be NEMA 4 enclosure separate from the high voltage control panel and fabricated from not less than 12 gauge steel and equipped with a gasketed enclosure door. The incoming power shall be isolated by means of a circuit breaker or fused disconnect. The controller shall receive inputs from a flow sensor and pressure transducer and the 24 volt pump station relay located on the discharge manifold. Pump starting circuits, time delay circuits, stations safety shutdown circuits and any optional equipment control circuits shall have an operating voltage not exceeding 120 volts. All time delay control relays shall be plug-in type for easy replacement. The control panel shall be equipped with the following switches and displays: Manual on/off auto selector switches with green and red indicator lamps, individual pump elapsed time hour meters, digital LED discharge pressure display. Data flow industrial controller shall provide GPM information and Low/No flow emergency shut down.

Skid Wiring. Wiring from control panels to motors shall be in liquid-tight conduit with copper conductor rated not less than 600 volts AC and of proper size to carry the full load amperage of the motors without exceeding 70% capacity of the conductor. A grounding cable shall be included in the liquid-tight conduit. There shall be no splices between the motor starters and the motor connection boxes. Provide multi-conductor shielded cable suitable for Class II low voltage controls for wiring to flow sensors, and pressure transducers. Wiring should be rated for direct burial.
All wiring shall conform to the National Electrical Code Standards. Flexible conduit sections shall be under 5' in length to meet code. All conduit to devices shall be attached securely to avoid trip hazards.

Lighting Arrestor. Main power supply feeding the pumping station shall be equipped with a 3 phase secondary lighting arrestor having a breakdown current rating of not less than 60,000 amps at 14,000 volts discharge. Power supplies, 300 volts and less, shall use 300 volt rated arrestor with 800-volt spark-over voltage. Power supplies 301-600 volts shall use 600 volt rated arrestors with a 1,000-volt spark-over voltage.

VFD Cooling fan. Sized to cool the VFD to a minimum of 50C.

Heater. 3Kw skid mounted thermostatically controlled. Steel housing, phased wiring to match pump drive, meets all UL, NEC and OSHA requirements.

Misc. Electrical Components. A three-pole main station disconnect shall be mounted in a separate NEMA 12 enclosure to completely isolate the electrical system from incoming power. The disconnect shall conform to the requirements of the NEC and applicable local codes. The disconnect shall have an operating handle on the front of the panel. Single-pole secondary distribution fuses with appropriate ratings shall supply power to each pump starter coil circuit, the control system, and to other circuits as specified. Each pump motor starter shall be equipped with an elapse time meter reading up to 999.9 hours in tenths of hours. The meter shall be installed in the electrical control cabinet. Corrosion inhibiting modules shall be installed in all electrical enclosures in accordance with the manufacturer's recommendations. The station shall be equipped with the following alarms: Low voltage safety shutdown, low discharge pressure safety shutdown, high discharge pressure safety shutdown, high temperature safety shutdown, starter failure cutout and VFD fault and bypass. Provide three phase monitors.

Standards. All wiring shall conform to the National Electrical Code Standards. Flexible conduit sections shall be less than 5' in length to meet code. All conduit devices shall be attached securely to avoid trip hazards. All controls and electrical equipment shall be thoroughly inspected and tested before shipment.

Pressure Transducer. Provide a solid-state pressure transducer to provide a noise free, linear output proportional to discharge pressure. Transducer shall be solid-state, strain gauge type with integral voltage regulating and output accuracy not less than .25%. Transducer shall be constructed of stainless steel and rated for the maximum pump station discharge pressure.

Flow Sensor. The pump station discharge manifold shall incorporate an insertion type, pulse frequency output flow sensor for continuous output to the pump station controls. Flow sensor output pulse shall be conditioned and fed directly to the PLC interrupt input for conversion and display in gallons per minute. For accuracy and security considerations, conversion to an analog signal prior to PLC input shall not be accepted. Flow sensor accuracy shall be no less than 2% for flow velocities ranging from 1-30 feet per second. Provide an optical isolator board, Rain Bird decoder, and two terminal connections for flow sensor reading by the irrigation controller.

Painting. Paint of the entire pump station shall consist of a multi-step coating system that includes metal preparation, rust inhibitive prime coat, and a two part polyurethane finish having a total dry film thickness of not les than 4 mils. Paint with manufacturer's standard colors. All electrical enclosures, tanks and accessory panels shall be painted to a minimum thickness of 3 mils and baked at 160-10 F. No exposed aluminum will be permitted.

Operation. Operation:
The pump station shall have two operating points.
When water is being supplied to the irrigation system from the lake and vertical turbine pumping system, the booster pumping system will be programmed not to operate.
When the municipal (potable) water service is connected to the booster pump and supplying water directly to the irrigation system the booster pump operation point shall be as shown on the drawings.
The pump station controls shall provide automatic pressure regulation based on variable flow. The controls shall be capable of changing the regulated downstream pressure while in operation based on flow or a discrete input signal.
The pump system controls shall be capable of up to six user adjustable pressure regulation set points based on flow or one additional set point based on a discrete input.
In addition to adjustment of downstream pressure, the controls shall be capable of up to six pressure regulation algorithms to insure accurate pressure regulation regardless of the regulated pressure or discharge flow.

Valve Locations. Locate all valves outside of asphalt and concrete surfaces.

Gate/Isolation Valves. Provide gate/isolation valves so that open space areas/fields can be shut down without interrupting service to remaining areas.

- For gate/isolation valve 2” and greater, install resilient wedge model gate valve conforming to AWWA C-509 standards. Valve shall be equipped with square operating nut. Nominal size of gate/isolation valve shall match mainline size.
- For gate/isolation valve on lines less than 2”, install threaded bronze gate/isolation valve with solid wedge, non-rising stem, Nibco T113 or approved equal. Nominal size of gate/isolation valve shall match mainline size.
- For valves located more than 2 feet below grade, install no valves less than 2” in size regardless of pipe size, with square operating nut.
- Install gate/isolation valve above grade in pump enclosure or bury below grade in round concrete valve box with metal lid. 6 Inch PVC class 200 sleeve, length as required, shall be installed from the gate/isolation valve (mainline) up to within 2 inches of the valve box lid per provided detail.

Quick Coupler Valves. Rain Bird 44 NP, 1”, 30 GPM. Contractor shall provide 44K, 1”, Corresponding Valve Key and SH-1, 1”, Hose Swivel. Provide one set of Key and Hose Swivel to the Owner’s maintenance staff for each five quick coupler installed. Install quick coupler valve, including filling the valve box with concrete, per provided detail.

Sports Fields Quick Couplers. Connect quick couplers at sports fields to not less than 1-1/2” PVC line size and at least one isolation valve per sports field quick coupler feed.

Ball/Flush Valve. Schedule 80 PVC Ball Valve with ABS handle shall be installed at all Remote Control/Drip Valve Assembly locations and in all piping under pressure (mainline). Schedule 40 PVC Ball Valve with ABS handle shall be installed at all flush valve locations (lateral/drip).

Automatic Control Valve. Rain Bird Electric Remote-Control Valve PEB-Series, 100 for 1” line and 200 for 2” line. Install below grade in pre-cast concrete valve box with metal lid. Valve shall be numbered with Christy identification tag (T. Christy Enterprises, Inc., Anaheim, CA). Install automatic control valve per provided detail including Schedule 80 PVC ball valve and fittings.

Automatic Control Valve with Drip Assembly. Rain Bird Electric Remote-Control Valve 100-PEB Series, Rain Bird Wye Filter RBY-100-200MX, Rain Bird Pressure Regulator PSI-M30X-100. Install automatic control valve with drip assembly below grade in pre-cast concrete jumbo valve box (25” x 15” minimum size) with metal lid. Install automatic control valve with drip assembly per provided detail including Schedule 80 PVC ball valve and fittings.

Concrete Valve Boxes. Pre-cast concrete rectangular valve box with metal lids, size adequately to house valve, plus components. For control valve with drip assembly, jumbo valve box with metal lid is required. For quick coupler or drip lateral flush valves, a 10" round concrete valve box with a round metal lid is required. Turf and drip valve boxes shall be installed level, lined-up, flush with grade in planting areas where possible. Valve boxes shall not be placed in sports playing fields.

The designer is to verify with the Owner whether locks are to be specified on valve boxes when located in the right-of-way. Locks on valve boxes are not required in parks.

Site Satellite Controller. Rain Bird ESP-Site Satellite Controller. This controller combines all features of the ESP-Sat Controller and the Cluster Control Unit (CCU) into one. The control unit shall be stainless steel, pedestal mount. This control unit shall be used on small sites, when one satellite/CCU is required. Communication from the central computer shall be hardwire when possible. Contractor shall install 1" conduit with pull-string from telephone terminal board (TTB) location to the control unit. Electrical requirements for operation are 120 VAC with toggle disconnect/switch. Provide 1" conduit with pull-string from the electrical service panel to the control unit. Provide 1" conduit with pull-string from the site satellites to the pump. Label each station on the controller lid with waterproof card and provide waterproof reduced color-coded site plan complete with station identification.

Cluster Control Unit (CCU). Rain Bird Cluster Control Unit (CCU). The CCU is the interface between the central control and the field satellites for the Maxicom^2 system. The unit shall be stainless steel, pedestal mount, located adjacent too, and in-line with the field satellites when grouped together. Size shall vary based upon the number of field satellites required for the project. Contractor shall install 1" conduit with communication wire from telephone terminal board (TTB) location to the CCU. Communication from the central computer shall be hardwired rather than cell phone whenever possible. Install 1" conduit with maxi wire between the CCU and the field satellites. Electrical requirements for operation are 120 VAC with toggle disconnect/switch. Provide 1" conduit with pull string from the electrical service panel to the CCU and 1" conduit with pull string from the CCU to the pump. Provide waterproof reduced color-coded site plan complete with controller location.

Field Satellites. Rain Bird ESP-SAT Field Satellite Controller. The field satellites interface with the CCU. The satellite controller shall be stainless steel, pedestal mount, located adjacent too, and in-line with other satellites and CCU when grouped together. Station number requirements, and the number of satellites shall vary based upon project size and valve quantities. Contractor shall install 1" conduit with maxi wire between the field satellites and CCU. Electrical requirements for operation are 120 VAC with toggle disconnect/switch. Provide 1" conduit with pull-string from the electrical service panel to the field satellites. Provide 1" conduit with pull-string from the field satellites to the pump. Label each station on the controller lid with waterproof card and provide waterproof reduced color-coded site plan complete with station identification.

Hand-Held Remote Control Unit. Hand-held Remote Control System shall be TRC Commander, as manufactured by Remote Control Technologies, 18342 Redmond Way, Redmond, WA 98052, 800-275-8558. The Hand-held Remote Control Features shall include the following: Automatic resetting fuse on receiver, multiple station capabilities, operates on 24 VAC-solenoids, master valve or pump disable, programmable time duration, receiver built-in safety default, direct controller interface ready. Included with the system shall be the carrying case, transmitter, receiver-32 stations, 32 station PCC, two antennas, one 9-volt alkaline battery and accessory pack. Mount antenna to provide communication with all areas of the project. Provide one remote per each 20 acres of project site area.

Control Wire. UF-UL American Wire Gauge 12/14 Solid Copper Direct Burial Wire. Follow mainline piping where possible. Wire color shall be continuous over entire length. All splicing of wire shall occur within the valve box at valve locations using 3M-DBY/DBR wire connectors. Intermediate splicing may occur, but the splice shall be placed in a valve box. Use white wire for common ground wire. Use easily distinguished colors for control wire. Install 3 spare wires looped through each valve location. If multiple

controllers are required for the project, the wire colors shall be the following:

Controller "A" Control wire: Red	Common wire: White with red stripe
Controller "B" Control wire: Brown	Common wire: White with brown stripe
Controller "C" Control wire: Blue	Common wire: White with blue stripe
Controller "D" Control wire: Green	Common wire: White with green stripe

Communication Wire (maxi wire). Anixter F-03P19BPD Direct Burial Wire, or approved equal, between the Cluster Control Units and the Field Satellites. All splicing of communication wire shall occur within the valve box at valve locations using 3M-DBY wire connectors or DBR. Intermediate splicing may occur, but the splice shall be placed in a valve box.

Pipe and Valve Over Sizing. Designer shall design the irrigation system to utilize no more than 70 percent of the maximum design capacity of the pipe and valves in all lines (oversize the pipe). Provide no PVC pipe less than 1 inch in size. Indicate, at each valve location on the drawings, both the design flow and maximum capacity in GPM.

Mainline Pipe. Provide minimum cover of 24 inches over pipe to finish grade.

For pipe sizes over 3 inches, provide Class 200 PVC, SDR-21, rated at 200 PSI, conforming to the dimensions and tolerances established by ASTM D2241, with an integral belled end suitable for solvent welding.

For line sizes up to 3 inches, provide Schedule 40 PVC conforming to the dimensions and tolerances established by ASTM Standard D 1785, with an integral belled end suitable for solvent welding.

Pipe Saddles. Provide ductile iron saddle clamps for lateral connections to pipes 4 inch and larger.

Thrust Blocks. Thrust blocks shall be required on pipe greater than or equal to 3-inch diameter or for all rubber gasketed pipe. Thrust blocks shall be 3000 PSI cast-in-place concrete bearing against undisturbed soil. Wrap fitting with 2 mil. plastic to protect bolts, joints, and fittings from concrete. No. 4 rebar with mastic coating shall be installed where pipe shall be anchored to the thrust blocks, and at all location where mainline pipe changes directions. Install thrust blocks so the horizontal and vertical dimensions of the thrust blocks are approximately equal. Size thrust blocks per provided detail to be included in the construction drawings by the designer.

Lateral Pipe. Schedule 40 PVC conforming to the dimensions and tolerances established by ASTM Standard D1785, with an integral belled end suitable for solvent welding. (Minimum cover- 12" over pipe to finish grade)

Fittings/Nipple. Schedule 80 PVC fittings/nipples shall be installed unless otherwise noted. Lateral pipe may use schedule 40 PVC fittings unless otherwise noted.

Drip Lateral Pipe/PVC Hose. Schedule 40 PVC conforming to the dimensions and tolerances established by ASTM Standard D 1785, with an integral belled end suitable for solvent welding. PVC hose shall be ½" IPS Excalibur (no substitutions). Maximum length of the PVC hose shall be 48". (Minimum cover- 12" over pipe to finish grade.)

Valve Box Pipe. Provide a minimum of 24" of straight pipe outside of valve boxes for all pipe entering and exiting valve boxes, with no changes in size pipe size from the valve to 24" outside of the box.

Sleeving. Schedule 40 PVC conforming to the dimensions and tolerances established by ASTM Standard D 1785, with an integral belled end suitable for solvent welding. Sleeving diameter shall be a minimum of twice that of the pipe or wiring bundle passing through the sleeve, or larger is noted otherwise. (Minimum cover-24" over pipe to finish grade.)

Backfill. Prior to backfill, all mainline and lateral pipe shall be reviewed by the Owner's representative and corrections made by the Contractor. All mainline shall be bedded with masonry sand 4" below and 4" above the pipe. All pipe trench backfill shall be 1 inch minus, clean, native material.

Irrigation Heads.

Spray Heads. Rain Bird 1806 Heads with plastic matched precipitation nozzles. Heads shall be installed plumb with swing joints. Install using side inlet with head flush with grade. (Note: 1806 SAM (seal-a-matic) heads shall be installed when there is severe elevation change across the site. SAM heads require installation through the bottom inlet.)

Impact Rotor Heads. Rain Bird 41-51 Series brass impact rotors with high-impact plastic cases and color-coded plastic nozzles for heavy-traffic large turf applications. Heads shall be installed plumb with swing joints.

Gear Rotor Heads. Rain Bird 5500, 7005 and 8005 gear driven rotors with integral rubber cover and Rain Curtain nozzles or Hunter I-20's and I-25's gear driven rotors with integral rubber cover and plastic color-coded nozzles. Head shall be installed plumb with swing joints.

Drip Emitters. Bowsmith drip pressure compensation 1 or 2 GPH emitters. Install emitters on the uphill side of the root ball at slope locations. Equally space the required number of emitters around the perimeter of the plant at the edge of the root ball.

Emitters shall be installed on black male ½" threaded adaptors, which shall be solvent welded to the PVC hose. PVC hose shall be ½" IPS Excalibur (no substitutions). Maximum length of the PVC hose shall be 48".

Drip Line. Netafim (no substitutions) may be used in roadway medians for all irrigation and in parks for trees only. Drip line shall be laid in equal rows, not rings, on-surface and covered with two inches of decomposed granite, do not bury. Do not use push-plug connectors at the lateral connection.
Netafim USA, 5470 East Home Ave., Fresno, CA 93727, 559.453.6800.

Swing Joint. Swing joints shall be schedule 80 PVC nipples and Marlex street ELLs per provided detail. (linked detail scan)

Mainline/Hydrostatic Test. Upon completion of the irrigation main, and prior to the installation of any automatic control valves, test the entire main or portions of the main for proper operation. Flush all air from the mains being tested and check all components for proper operation. After completion of the flushing operation, test the mainline with 150-PSI hydrostatic pressure for a minimum of 2 hours. After the pressure within the mains has stabilized, no pressure loss will be allowed for the test period. Remove and/or replace any item or component of the system which does not comply with the test, and test the entire system again until satisfactory test result are obtained. Contractor shall request observation by the Owner's representative 48 hours prior to testing. The test shall be made in the presence of the Owner's representative, signed and dated.

Coverage Observation. Upon completion of the irrigation system and with the Owner's representative present, Contractor shall perform a coverage test on all components of the system to verify 100% coverage. The Contractor shall perform all work and furnish all materials necessary to correct any inadequacies and adjust heads/emitters as required.

Baseball/Softball- Special Irrigation Requirements (both turf and skinned infields).

Provide quick couplers and pop-up heads per the provided detail. Click for link to details.

Football/Soccer- Special Irrigation Requirements. None.

Warranty. Provide one-year minimum warranty from commencement of substantial completion on all irrigation material, equipment and workmanship against defects and failure. Fill and repair all depressions and settling of irrigation trenches and excavations. Repair damage to all premises/facilities caused by defective items. Repairs shall be made with three days of notification from the Owner.

Extra Materials. Provide the following spare materials to the Owner to match those used on the Project:

- 1 Field Satellite Controller if any used.
- 5 Irrigation Heads of each type and model used.
- 5 Quick Coupler Valves if any used. Also provide keys and hose swivels as previously stated in the quick coupler section.
- 5 Automatic Control Valves, Remote-Control Valves, Wye Filters, and Pressure Regulators if any used.
- 5 PVC Ball/Flush Valves of each type and size used.