Proposed Standard Plan Changes.

July2, 2015

PART I I

Standard Plans Change Request

Requests for modifying the Standard Plans for Road and Bridge Construction must be submitted to:

NDOT Specifications Division
Attn: Standards and Manuals Supervisor
1263 South Stewart Street
Carson City, Nevada 89712

Standard Sheet No.: T-30.1.19 Page No.: T-30 Note: A separate form is required for each change.

Description of requested modification or correction: UPDATE LUMINAIRE DETAILS TO MANUFACTURERS AND PER PLAN

(Please attach supporting information).

Reason for request: OUTDATED DETAIL

Requestor Information: Name: [illegible] Phone: 7566

For Standards/Manuals Personnel Only: ☐ Approved ☐ Denied

Revised by: Signature: _____ Date: _____

Policy Review:
☐ CADD Standards ☐ ASTM ☐ AASHTO ☐ Design Manual ☐ Specifications

Reviewed by: Signature: _____ Date: _____

Notes:

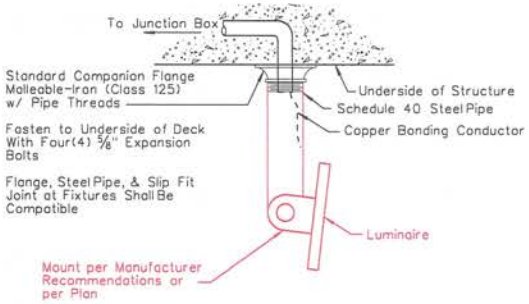

TYPE A UNDERPASS LUMINAIRE

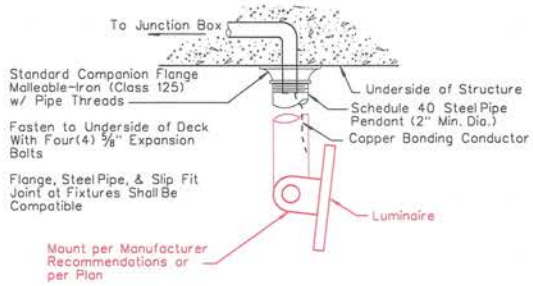

TYPE C UNDERPASS LUMINAIRE

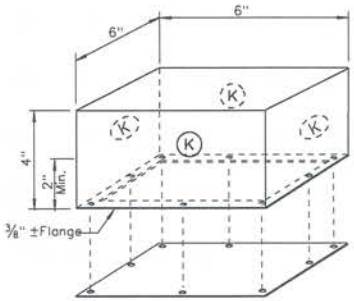

DETAIL J
JUNCTION BOX

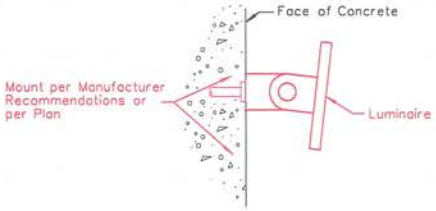

TYPE B UNDERPASS LUMINAIRE

NOTES:

1. JUNCTION BOX AND COVER SHALL BE 16 GAUGE STEEL.
2. GALVANIZE ASSEMBLY AFTER FABRICATION.
3. BOX SHALL BE FLUSH WITH BOTTOM OF STRUCTURE.
4. FASTEN COVER BY DRILL AND TAP WITH EIGHT (8) #10-24 UNC BRASS SCREWS.
5. COVER SHALL BE ON BOX DURING POURING.
6. AN EQUIVALENT APPROVED MANUFACTURER'S BOX MAY BE USED IN LIEU OF DETAIL J JUNCTION BOX.
7. (K) KNOCK OUT FOR 1" CONDUIT. BOTTOM SHALL BE MIN. OF 3 1/2" ABOVE COVER TO CLEAR STRUCTURAL STEEL.

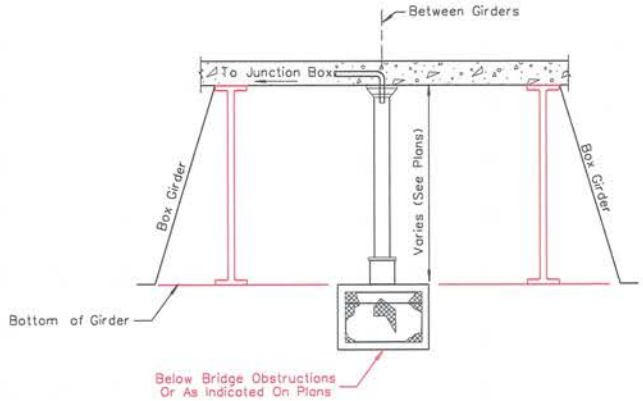

PENDANT INSTALLATION
TYPE C UNDERPASS LUMINAIRE

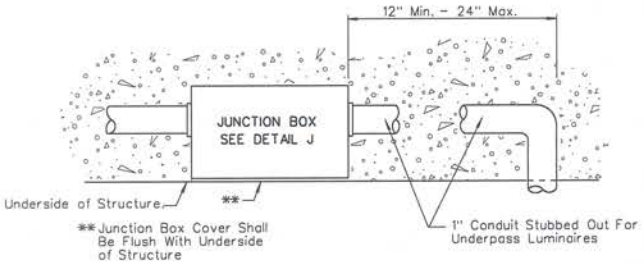

DETAIL B

STATE OF NEVADA
DEPARTMENT OF TRANSPORTATION

UNDERPASS LUMINAIRES
& JUNCTION BOX

DET. *	(000)	Signed Original On File
ADOPTED */**	REVISED */**	CHIEF SAFETY/TRAFFIC ENGR.

SHT99

Standard Plans Change Request

Requests for modifying the Standard Plans for Road and Bridge Construction must be submitted to:

NDOT Specifications Division
Attn: Standards and Manuals Supervisor
1263 South Stewart Street
Carson City, Nevada 89712

Standard Sheet No.: T-30.1.20 Page No.: T-31 Note: A separate form is required for each change.

Description of requested modification or correction: UPDATE BRIDGE / BARRIER RAIL JUNCTION BOX DETAIL

(Please attach supporting information).

Reason for request: DON'T USE TYPE 1 ANY MORE

Requestor Information: Name: [illegible] Phone: 7566

For Standards/Manuals Personnel Only: ☐ Approved ☐ Denied

Revised by: Signature: _____ Date: _____

Policy Review:
☐ CADD Standards ☐ ASTM ☐ AASHTO ☐ Design Manual ☐ Specifications

Reviewed by: Signature: _____ Date: _____

Notes:

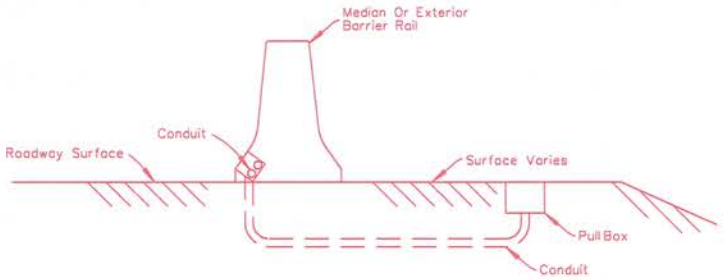

JUNCTION BOX/PULLBOX DETAIL
POWER OR FUTURE CONDUCTORS
N.T.S.

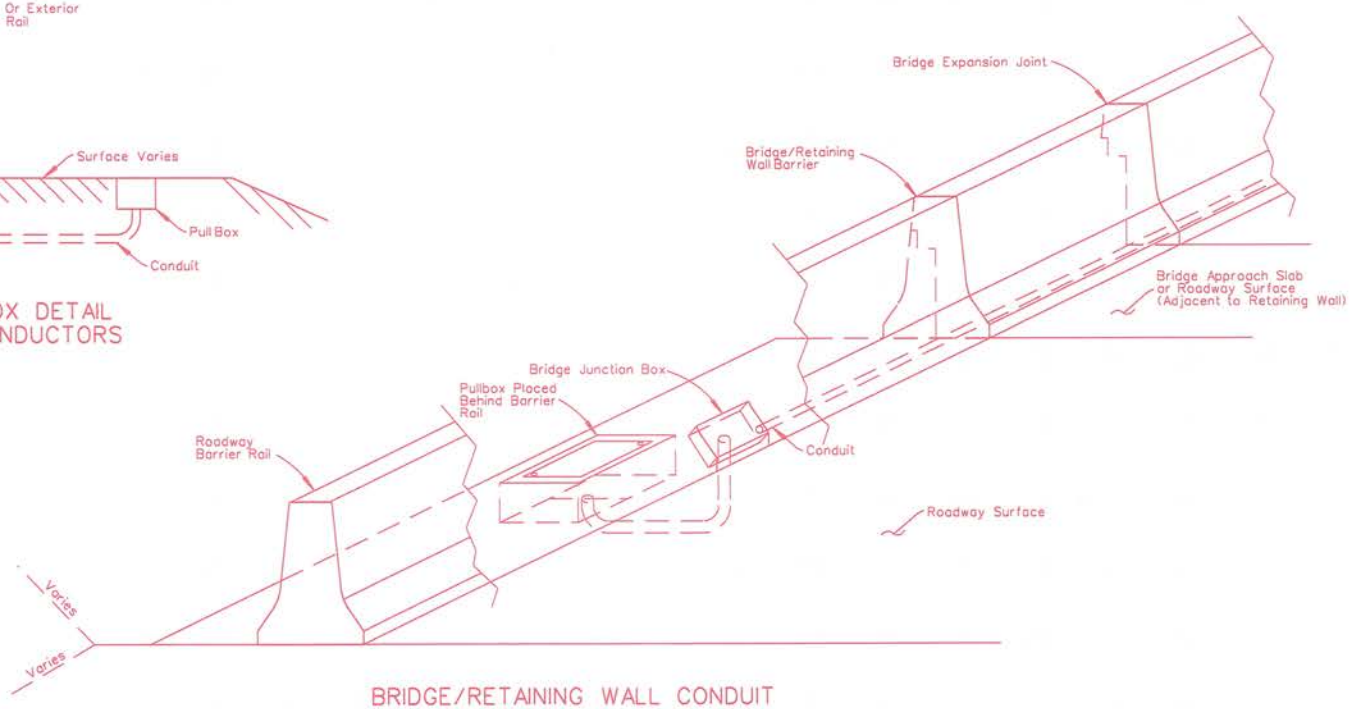

BRIDGE/RETAINING WALL CONDUIT
TERMINATION DETAIL
N.T.S.

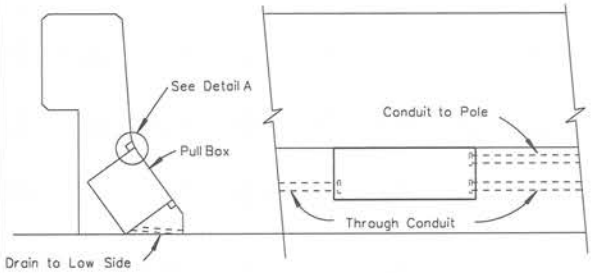

INSTALLATION IN SLOPING PARAPETS

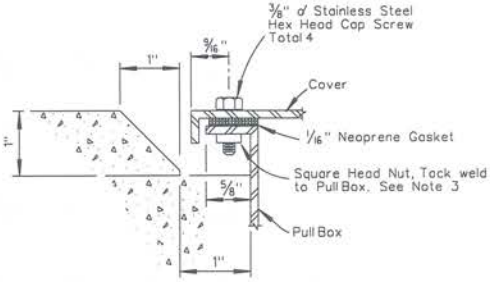

DETAIL A

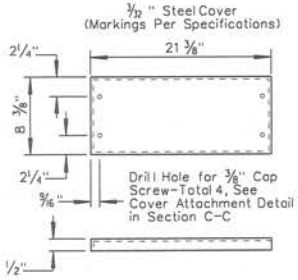

COVER DETAILS

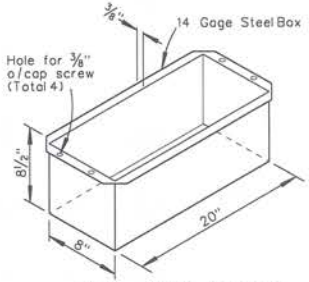

PULL BOX DETAIL

STATE OF NEVADA
DEPARTMENT OF TRANSPORTATION

BRIDGE / BARRIER RAIL
JUNCTION BOX
TYPE 1 AND 2

DET. *	(000)	Signed Original On File
ADOPTED */**	REVISED */**	CHIEF SAFETY/TRAFFIC ENGR.

SHT99

Standard Plans Change Request

Requests for modifying the Standard Plans for Road and Bridge Construction must be submitted to:

NDOT Specifications Division
Attn: Standards and Manuals Supervisor
1263 South Stewart Street
Carson City, Nevada 89712

Standard Sheet No.: T-31.1.1 Page No.: T-32 Note: A separate form is required for each change.

Description of requested modification or correction: .....

1. Note 1 – Change to "Horizontal clearance (HC) should not be less than 12' from the edge of travel way. If a shoulder wider than 6' exists, the minimum horizontal clearance (HC) should be 6' from the edge of the shoulder. In urban areas, a lesser clearance may be used where necessary."
2. Note 3 – Delete or add "except when protected by guardrail or barrier rail or is placed beyond clear zone
3. Note 4 – Delete "Maximum of 30 ft"
4. Note 5 - add "except when protected by guardrail or barrier rail or is placed beyond clear zone ." at the end of the note
5. Note 9 – Delete
6. Remove note "Sign Slope As Noted in Sign Summary Sheets) on Sign In Embankment typical

.....
.....
(Please attach supporting information).

Reason for request:

1. Note 1 - Note needed clarification
2. Note 3 - Sign support details in the Standard Plans show breakaway designs
3. Note 4 - Clear zone widths can exceed 30'
4. Note 5 - No sign island is needed if it is protected by guardrail or barrier rail
5. Note 9 – silver book is not exclusive on aluminum sheet construction
6. Sign slope is only an estimate in the sign summary sheets and may not be accurate

.....
.....

Requestor Information: Name: Jeannie Drown Phone: 888-7678

==========

For Standards/Manuals Personnel Only: ☐ Approved ☐ Denied

Revised by: Signature: _____ Date: _____

Policy Review:
☐ CADD Standards ☐ ASTM ☐ AASHTO ☐ Design Manual ☐ Specifications

Reviewed by: Signature: _____ Date: _____

Notes: .....
.....
.....
.....
.....

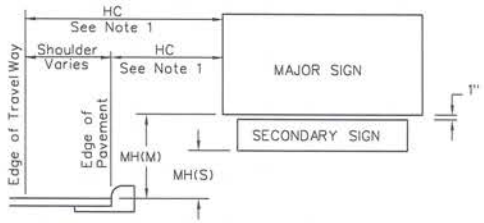

SIGN LOCATION (GENERAL)

	Single Signs	Double Signs
Freeways And Expressways	7'	8' (M) 5' (S)
Commercial, Residential Curb and Gutter	7'	7' (M) 6' (S)
Rural Roads And Interchange Ramps	7'	7' (M) 6' (S)
Freeway Entrance Assembly	2'	2' (S)
Chevrons & One Way	4'	N/A

(M) MAJOR SIGN (S) SECONDARY SIGN

MINIMUM MOUNTING HEIGHTS (MH)

NOTES:

1. Horizontal clearance (HC) should not be less than 12' from the edge of travel way. If a shoulder wider than 6' exists the minimum horizontal clearance (HC) should be 6' from the edge of the shoulder. In urban areas, a lesser clearance may be used where necessary.
2. For sign panel bracing details, see sheet T-31.1.4.
3. All sign supports shall be of breakaway design, except when protected by guardrail, or barrier rail, or is placed beyond clear zone.
4. For double post braces supports, maintain HC clear zone width, except when protected by guardrail or barrier rail. For clear zone widths, refer to AASHTO Roadside Design Guide current edition.
5. Sign island required when H 15', or sign slope is steeper than 6:1, or when required in contract plans. Except when protected by guardrail or barrier rail or is placed beyond clear zone.
6. See sheet T-31.1.6 for sign island construction.
7. For sign posts, see post selection charts on sheet T-31.1.2.
8. For materials not directly specified, see standard specifications and special provisions.
9. Prepaint the exposed portion of fastening hardware on the face of the sign panels with baked enamel to match the sign face.

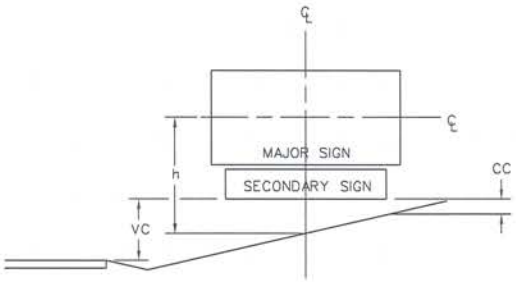

SIGN IN EXCAVATION

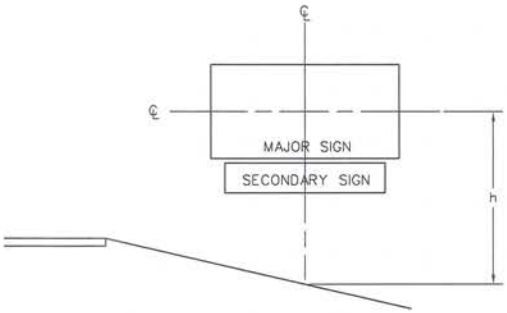

SIGN IN EMBANKMENT

Minimum Corner Clearance (CC)= 1'
Maximum Vertical Clearance (VC) for Single Sign= 10', Double Sign= 11'
Maximum h=15'
Special Design May Be Necessary If Given Limits Are Exceeded

STATE OF NEVADA
DEPARTMENT OF TRANSPORTATION

ROADSIDE SIGNS
GENERAL
SIGN LOCATION

T-31.1.1	(627)	Signed Original On File
ADOPTED 8/69	REVISED 9/04	CHIEF SAFETY/TRAFFIC ENGR.

Standard Plans Change Request

Requests for modifying the Standard Plans for Road and Bridge Construction must be submitted to:

NDOT Specifications Division
Attn: Standards and Manuals Supervisor
1263 South Stewart Street
Carson City, Nevada 89712

Standard Sheet No.: T-31.1.2 Page No.: T-33 Note: A separate form is required for each change.

Description of requested modification or correction: .....

1. Note 3 – Delete
2. Post Selection Chart - Description for E: Double Post Braced - Delete "(See Note 3)"

..... (Please attach supporting information).

Reason for request: .....

1. Note 3 - Note is already on previous sheet
2. Note 3 is being deleted

.....

Requestor Information: Name: Jeannie Drown Phone: 888-7678

==========

For Standards/Manuals Personnel Only: ☐ Approved ☐ Denied

Revised by: Signature: _____ Date: _____

Policy Review:
☐ CADD Standards ☐ ASTM ☐ AASHTO ☐ Design Manual ☐ Specifications

Reviewed by: Signature: _____ Date: _____

Notes: .....

POST SELECTION CHART

SIGN AREA(a) (SQ. FT.)	h(FT.)					
	0'≤h<8'	8'≤h<10'	10'≤h<12'	12'≤h<14'	14'≤h<15'	15'≤h<17'
0≤a< 6.5	A	A	A	A	A	B
6.5≤a<8.5	A	A	A	B	B	C
8.5≤a<11	A	A	B	C	C	C
11≤a<13	A	B	C	C	C	D
13 ≤a<15	A	C	C	D	D	D
15≤a< 17	B	C	C	D	D	F
17≤a<19.5	C	C	D	D	D	F
19.5≤a<21.5	C	C	D	E	F	F
21.5≤a<23.5	C	C	D	E	F	F
23.5 ≤a<43	C	C	E	E	F	F
43≤a<70	E	E	E	E	F	F
70≤a<140	E	E	E	E	F	F
140≤a<200	E	E	E	F	F	F

POST SELECTION CHART

POST TYPE	DESCRIPTION	REFERENCE SHEET
A	2½" Square Metal Post (12 Gage)–Single Post	T-31.2.1
B	2½" Square Metal Post (10 Gage)–Single Post	T-31.2.1
C	Single Post Unbraced 3" Dia Round Metal Post	T-31.3.1 thru T-31.3.2
D	Double Post Unbraced 3" Dia Round Metal Post	T-31.3.1 thru T-31.3.2
E	Double Post Braced Post–3" Dia Round Metal Post Brace–3" Dia Round Metal Post	T-31.4.1 thru T-31.4.3
F	Special Design: Contact Traffic Engineering	

NOTES:

1. Sign area is total of major and secondary signs.
2. Alternate posts must be approved by traffic engineering.

STATE OF NEVADA
DEPARTMENT OF TRANSPORTATION

ROADSIDE SIGNS
GENERAL
POST SELECTION CHARTS

T-31.1.2	(627)	Signed Original On File
ADOPTED 7/96	REVISED 12/04	CHIEF SAFETY/TRAFFIC ENGR.

Standard Plans Change Request

Requests for modifying the Standard Plans for Road and Bridge Construction must be submitted to:

NDOT Specifications Division
Attn: Standards and Manuals Supervisor
1263 South Stewart Street
Carson City, Nevada 89712

Standard Sheet No.: T-31.2.1 Page No.: T-38 Note: A separate form is required for each change.

Description of requested modification or correction:

1. Note 2 - Delete "post" from end of note
2. Note 3 - Delete
3. Change note for post length. Substitute the word "estimated" instead of noted
4. Remove the note, "Sign Panel Bracing as required see standard plan T-31.1.4", arrow and symbols pertaining to the that note.
5. Remove "(Bolt head colored to match sign face)," from note for 1/16"x 4" round head, square neck carriage bolt

..... (Please attach supporting information).

Reason for request:

1. Note 2 – cost for the anchor post is included in the cost of the sign (sq ft)
2. Note 3 – not necessary
3. Post lengths are estimated and the note should reflect this
4. Note is not needed and seems to be pointing to the sign face
5. "bolt head colored to match sign face" information is in the Standard Specifications for Road and Bridge Construction in section 627.03.01 " Pre-paint the exposed portion of fastening hardware on the face of the sign panels with baked enamel or use a commercial quality pre-painted fastener to match the sign face."

Requestor Information: Name: Jeannie Drown Phone: 888-7678

==========

For Standards/Manuals Personnel Only: ☐ Approved ☐ Denied

Revised by: Signature: _____ Date: _____

Policy Review:
☐ CADD Standards ☐ ASTM ☐ AASHTO ☐ Design Manual ☐ Specifications

Reviewed by: Signature: _____ Date: _____

Notes: .....

NOTES:

1. Footings to be drilled holes as shown, and filled with class A or AA concrete.
2. Anchor post included in cost of sign.

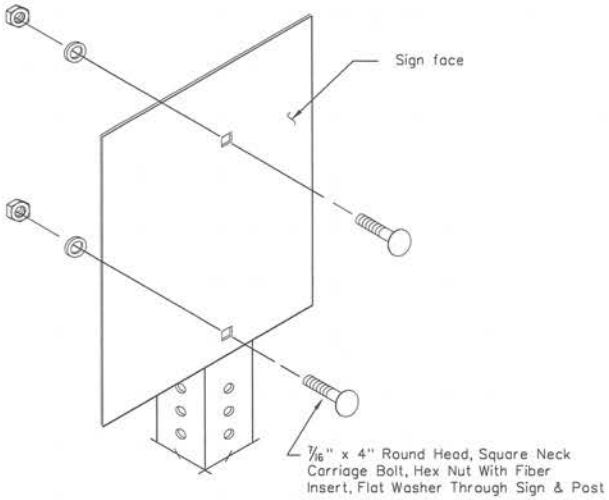

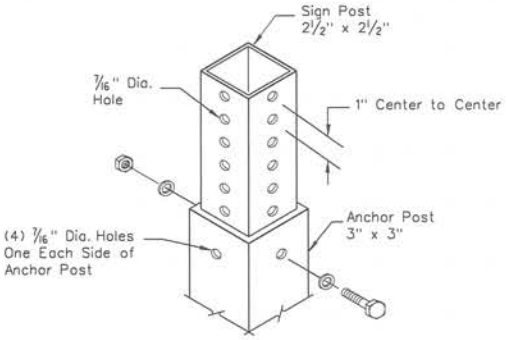

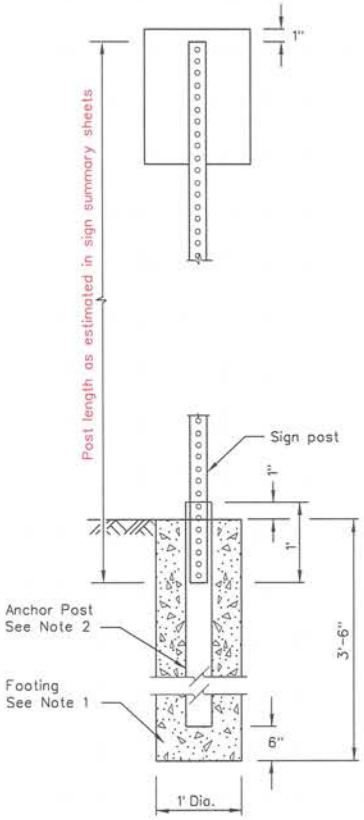

STATE OF NEVADA
DEPARTMENT OF TRANSPORTATION

ROADSIDE SIGNS
SQUARE METAL POSTS

T-31.2.1	(627)	Signed Original On File
ADOPTED 8/98	REVISED	CHIEF SAFETY/TRAFFIC ENGR.

Standard Plans Change Request

Requests for modifying the Standard Plans for Road and Bridge Construction must be submitted to:

NDOT Specifications Division
Attn: Standards and Manuals Supervisor
1263 South Stewart Street
Carson City, Nevada 89712

Standard Sheet No.: T-31.3.1 Page No.: T-39 Note: A separate form is required for each change.

Description of requested modification or correction:

1. Note 1 – Delete "post" from end of note
2. Note 2 – Delete
3. Delete note "Sign hardware, bracing, vertical joints, vertical joint closure strip & stringers as required. See Standard Plan T-31.1.4"
4. Remove "(Bolt head colored to match sign face)," from note for 1/16"x 4" round head, square neck carriage bolt
5. Substitute "Estimated" for "Noted" in the three other notes pertaining to Post Lengths

..... (Please attach supporting information).

Reason for request:

1. Note 1 – cost for the anchor post is included in the cost of the sign (sq ft)
2. Note 2 – not necessary
3. Note is not necessary
4. "Bolt head colored to match sign face" information is in the Standard Specifications for Road and Bridge Construction in section 627.03.01 " Pre-paint the exposed portion of fastening hardware on the face of the sign panels with baked enamel or use a commercial quality pre-painted fastener to match the sign face."
5. Post Lengths are estimated in the sign summary sheets and may not be accurate

Requestor Information: Name: Jeannie Drown Phone: 888-7678

==========

For Standards/Manuals Personnel Only: ☐ Approved ☐ Denied

Revised by: Signature: _____ Date: _____

Policy Review:
☐ CADD Standards ☐ ASTM ☐ AASHTO ☐ Design Manual ☐ Specifications

Reviewed by: Signature: _____ Date: _____

Notes: .....

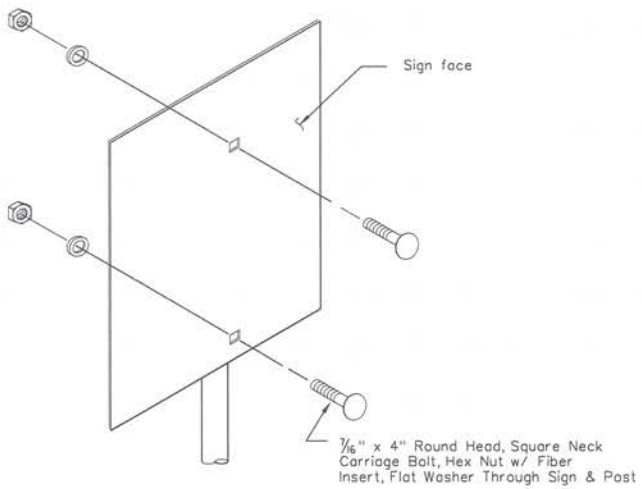

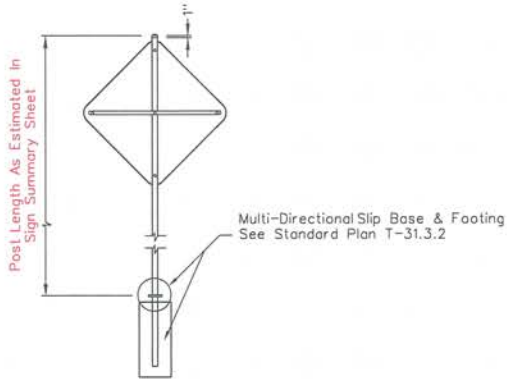

SINGLE POST

NOTES:

1. Anchor post included in cost of sign.
2. Inner posts are those closest to roadway, and the outer posts are those farthest away.

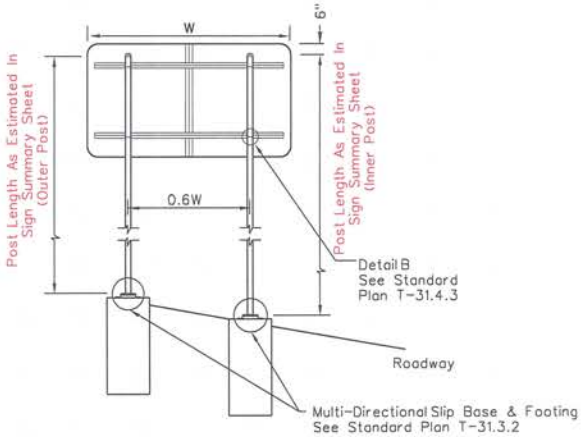

DOUBLE POST UNBRACED

STATE OF NEVADA
DEPARTMENT OF TRANSPORTATION

ROADSIDE SIGNS
ROUND METAL POSTS
UNBRACED

T-31.3.1	(627)	Signed Original On File
ADOPTED 8/98	REVISED	CHIEF SAFETY/TRAFFIC ENGR.

Standard Plans Change Request

Requests for modifying the Standard Plans for Road and Bridge Construction must be submitted to:

NDOT Specifications Division
Attn: Standards and Manuals Supervisor
1263 South Stewart Street
Carson City, Nevada 89712

Standard Sheet No.: T-31.3.2 Page No.: T-40 Note: A separate form is required for each change.

Description of requested modification or correction:

1. Note 4 – Delete
.....
.....
.....
.....
.....
.....
.....
.....
..... (Please attach supporting information).

Reason for request:

1. Note 4 is not necessary
.....
.....
.....
.....
.....

Requestor Information: Name: Jeannie Drown Phone: 888-7678

==========

For Standards/Manuals Personnel Only: ☐ Approved ☐ Denied

Revised by: Signature: _____ Date: _____

Policy Review:
☐ CADD Standards ☐ ASTM ☐ AASHTO ☐ Design Manual ☐ Specifications

Reviewed by: Signature: _____ Date: _____

Notes: .....
.....
.....
.....
.....

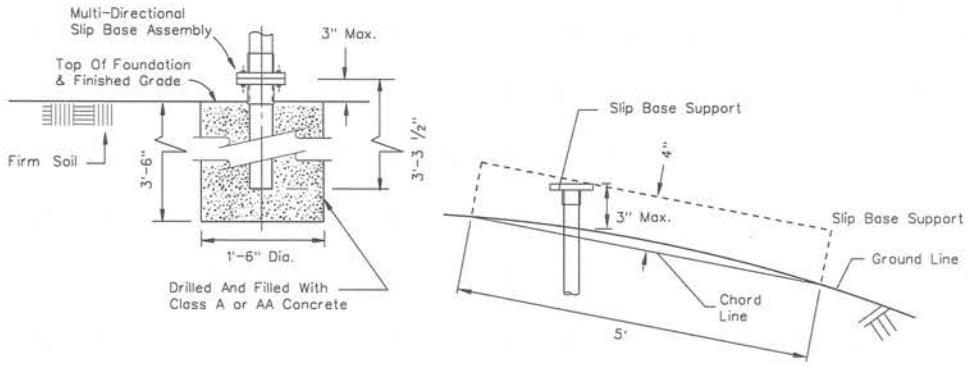

FOOTING DETAIL

NOTES:

1. All parts and hardware shall be galvanized as per section 715 of the standard specifications, except as noted.
2. Multi-directional slip bases are not required behind concrete barrier rail or behind guardrail where the sign post is greater than 2'-6" from the back side of the guardrail post.
3. Use standard weight pipe for sign post and sleeve. See ASTM A 53.

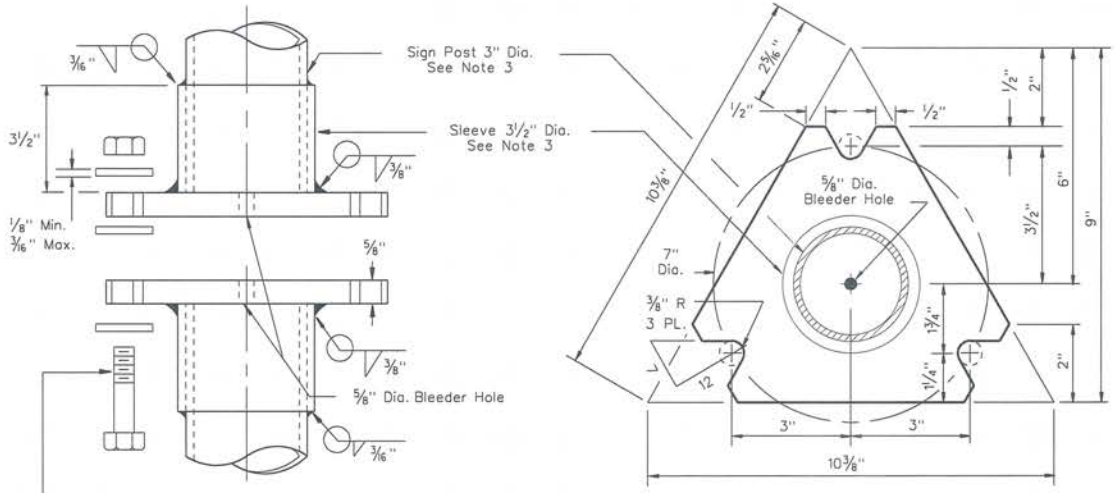

ASSEMBLY ELEVATION VIEW

5/8"-11 x 3 1/8" Bolt, Type 1 ASTM A 325 or Type 1 ASTM A 449 (Grade 5); Each With Three USS Through Hardened Washers ASTM F 436 Type 1; And One Nylon Insert Stop Nut ASTM A 563 DH. All Items Shall Be Galvanized As Per Manufacturer's Specifications. Torque Within the Range of 24-29 Ft-Lb. See BOLT DETAIL below.

Plate Thickness = 5/8"

PLAN VIEW
TOP/BOTTOM PLATE

n = A Typical Manufacturer's Identification

Type 1 ASTM A449
5/8" x 3 1/8" Bolt

Type 1 ASTM A325
5/8" x 3 1/8" Bolt

TOP VIEW
BOLT DETAIL

STATE OF NEVADA
DEPARTMENT OF TRANSPORTATION

ROADSIDE SIGNS
ROUND METAL POSTS
MULTI-DIRECTIONAL
SLIP BASE

T-31.3.2 (627,715)		Signed Original On File
ADOPTED 7/96	REVISED 9/00	CHIEF SAFETY/TRAFFIC ENGR.

Standard Plans Change Request

Requests for modifying the Standard Plans for Road and Bridge Construction must be submitted to:

NDOT Specifications Division
Attn: Standards and Manuals Supervisor
1263 South Stewart Street
Carson City, Nevada 89712

Standard Sheet No.: T-31.4.1 Page No.: T-41 Note: A separate form is required for each change.

Description of requested modification or correction:

1. Note 2 – Delete the word "Post" at the end of this note.
2. Note 3 – Delete
   .....
   .....
   .....
   .....
   .....
   .....
   .....
   ..... (Please attach supporting information).

Reason for request:

1. Note 2 – costs for the anchor post & bracing is included in the cost of the sign (sq ft)
2. Note 3 – Not necessary

.....
.....
.....
.....

Requestor Information: Name: Jeannie Drown Phone: 888-7678

==========

For Standards/Manuals Personnel Only: ☐ Approved ☐ Denied

Revised by: Signature: _____ Date: _____

Policy Review:
☐ CADD Standards ☐ ASTM ☐ AASHTO ☐ Design Manual ☐ Specifications

Reviewed by: Signature: _____ Date: _____

Notes: .....
.....
.....
.....
.....

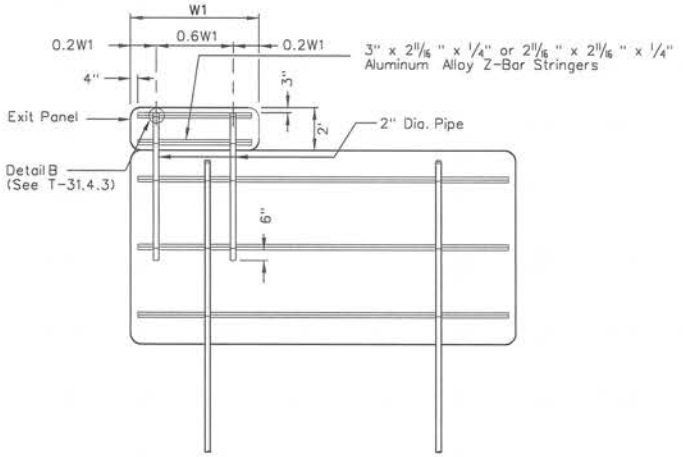

EXIT PANEL ATTACHMENT

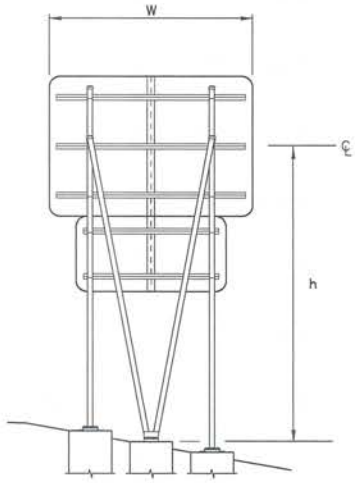

DOUBLE SIGN

NOTES:

1. Footings to be drilled holes as shown, and filled with class A or AA concrete.
2. Anchor post and bracing included in cost of sign.
3. Inner posts are those closest to the roadway, and the outer posts are those farthest away.

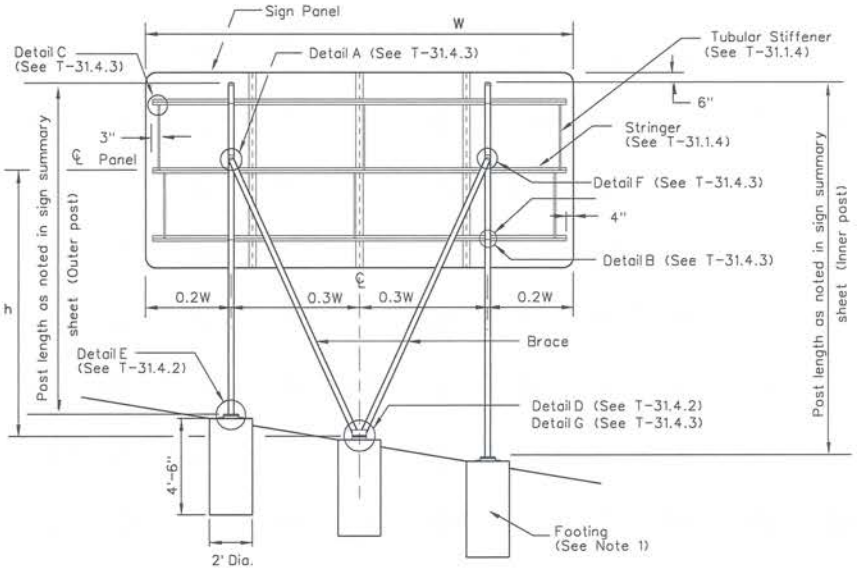

SINGLE SIGN

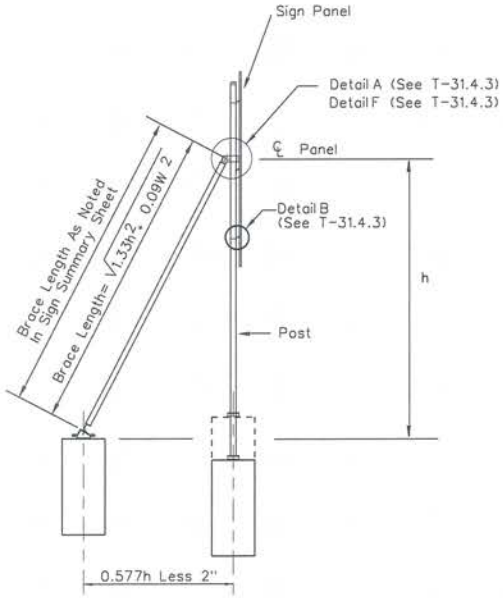

STATE OF NEVADA
DEPARTMENT OF TRANSPORTATION

ROADSIDE SIGNS
ROUND METAL POSTS
BRACED

T-31.4.1	(627)	Signed Original On File
ADOPTED 8/98	REVISED	CHIEF SAFETY/TRAFFIC ENGR.

Standard Plans Change Request

Requests for modifying the Standard Plans for Road and Bridge Construction must be submitted to:

NDOT Specifications Division
Attn: Standards and Manuals Supervisor
1263 South Stewart Street
Carson City, Nevada 89712

Standard Sheet No.: T-31.4.2 Page No.: T-42 Note: A separate form is required for each change.

Description of requested modification or correction:

1. Notes - Delete
2. Circled part of typical needs to be rotated clockwise 90° ?

..... (Please attach supporting information).

Reason for request:

1. Notes not necessary
2. Orientation of this part of Detail H is not consistent with Detail D

Requestor Information: Name: Jeannie Drown Phone: 888-7678

For Standards/Manuals Personnel Only: ☐ Approved ☐ Denied

Revised by: Signature: _____ Date: _____

Policy Review:
☐ CADD Standards ☐ ASTM ☐ AASHTO ☐ Design Manual ☐ Specifications

Reviewed by: Signature: _____ Date: _____

Notes: .....

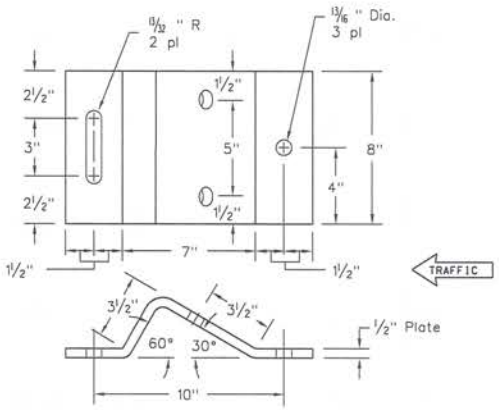

TOP PLATE

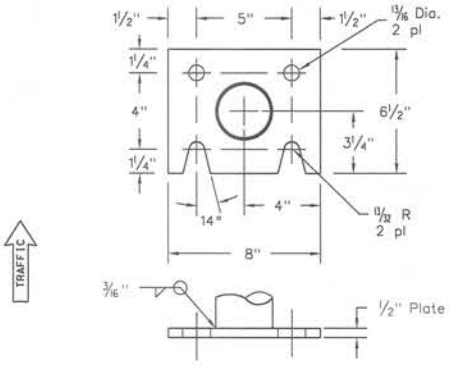

TOP PLATE

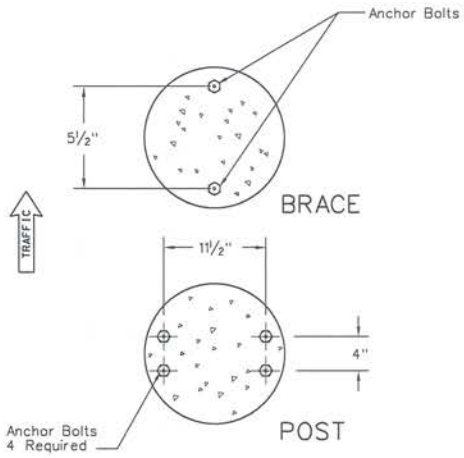

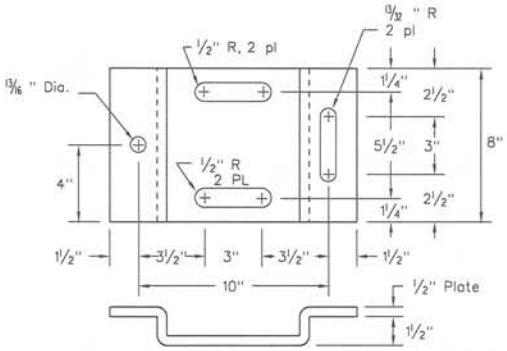

BOTTOM PLATE

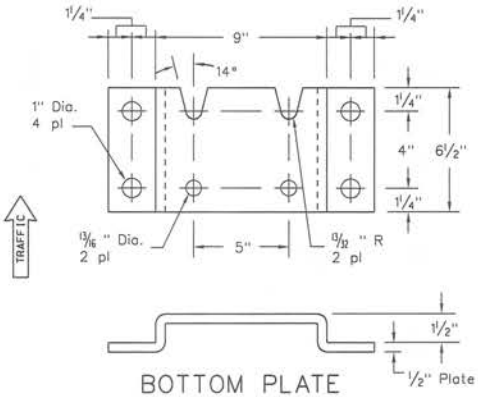

BOTTOM PLATE

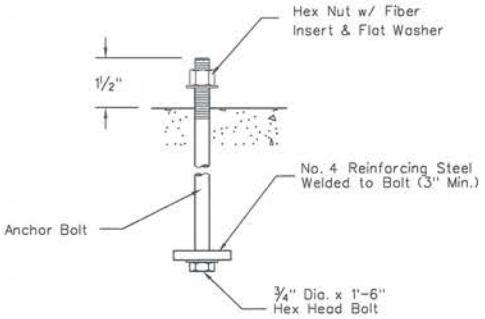

DETAIL H
ANCHOR BOLTS

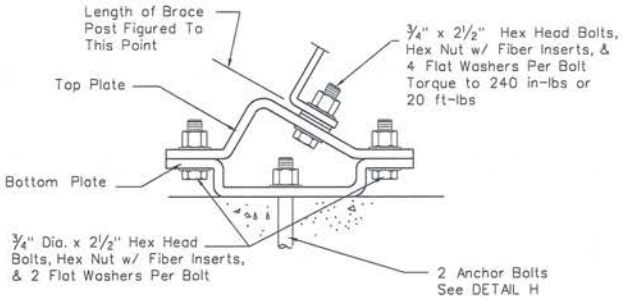

DETAIL D
BRACE

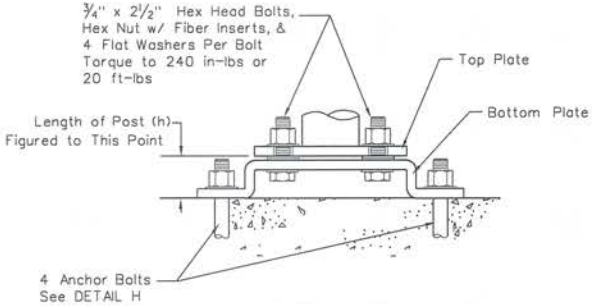

DETAIL E
POST

STATE OF NEVADA
DEPARTMENT OF TRANSPORTATION

ROADSIDE SIGNS
ROUND METAL POSTS
BRACED

T-31.4.2	(627)	Signed Original On File
ADOPTED 8/98	REVISED	CHIEF SAFETY/TRAFFIC ENGR.

Standard Plans Change Request

Requests for modifying the Standard Plans for Road and Bridge Construction must be submitted to:

NDOT Specifications Division
Attn: Standards and Manuals Supervisor
1263 South Stewart Street
Carson City, Nevada 89712

Standard Sheet No.: T-31.4.3 Page No.: T-43 Note: A separate form is required for each change.

Description of requested modification or correction:

1. "Notes" - Delete
2. Delete Legend and Asterisk *

..... (Please attach supporting information).

Reason for request:

1. Notes not necessary
2. Information is in the Standard Specifications for Road and Bridge Construction in section 627.03.01 " Pre-paint the exposed portion of fastening hardware on the face of the sign panels with baked enamel or use a commercial quality pre-painted fastener to match the sign face."

Requestor Information: Name: _____ Phone: _____

==========

For Standards/Manuals Personnel Only: ☐ Approved ☐ Denied

Revised by: Signature: _____ Date: _____

Policy Review:
☐ CADD Standards ☐ ASTM ☐ AASHTO ☐ Design Manual ☐ Specifications

Reviewed by: Signature: _____ Date: _____

Notes: .....

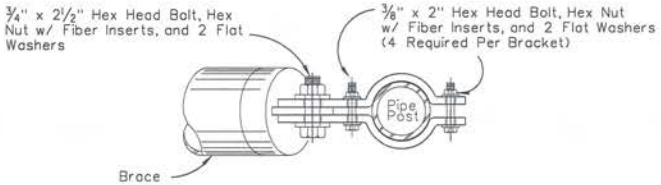

DETAIL A
CLAMP ASSEMBLY

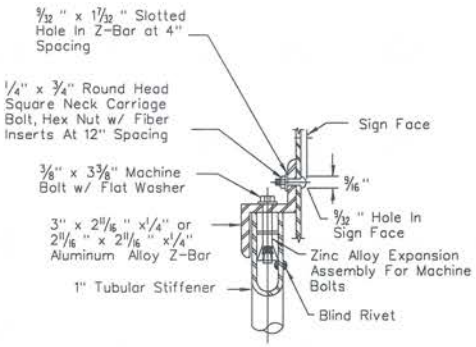

DETAIL C

POST Nom. Dia.	PR	PD	S
1"	7/32"	1 5/16"	1 9/16"
2"	1 3/16"	2 3/8"	2 5/8"
3"	1 3/4"	3 1/2"	3 3/4"

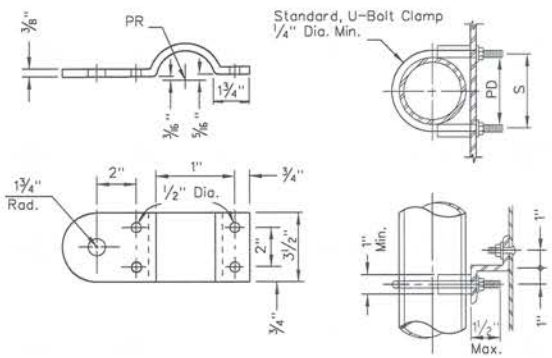

DETAIL B
CLAMP PLATE

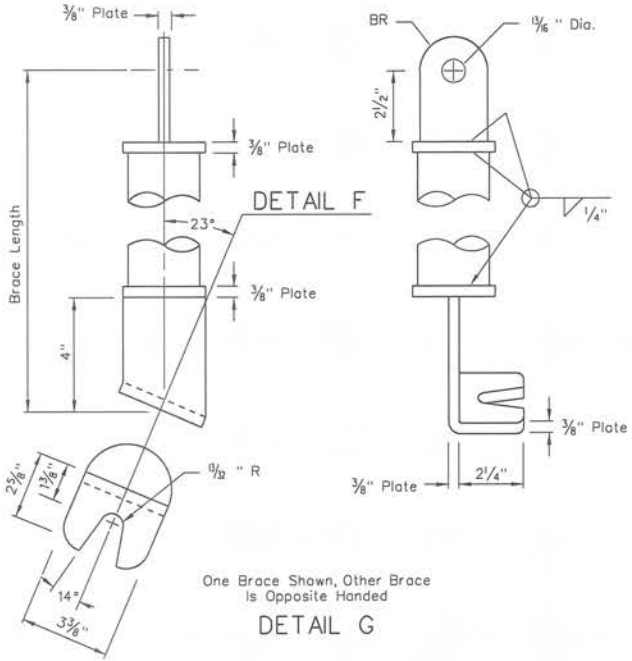

One Brace Shown, Other Brace Is Opposite Handed

DETAIL G

STATE OF NEVADA
DEPARTMENT OF TRANSPORTATION

ROADSIDE SIGNS
ROUND METAL POSTS
BRACED

T-31.4.3	(627)	Signed Original On File
ADOPTED 8/98	REVISED	CHIEF SAFETY/TRAFFIC ENGR.

Standard Plans Change Request

Requests for modifying the Standard Plans for Road and Bridge Construction must be submitted to:

NDOT Specifications Division
Attn: Standards and Manuals Supervisor
1263 South Stewart Street
Carson City, Nevada 89712

Standard Sheet No.: T-31.5.1 Page No.: T-44 Note: A separate form is required for each change.

Description of requested modification or correction:

1. Note 2 – Delete
.....
.....
.....
.....
.....
.....
.....
.....
..... (Please attach supporting information).

Reason for request:

1. Note 2 – not necessary
.....
.....
.....
.....
.....

Requestor Information: Name: Jeannie Drown Phone: 888-7678

==========

For Standards/Manuals Personnel Only: ☐ Approved ☐ Denied

Revised by: Signature: _____ Date: _____

Policy Review:
☐ CADD Standards ☐ ASTM ☐ AASHTO ☐ Design Manual ☐ Specifications

Reviewed by: Signature: _____ Date: _____

Notes: .....
.....
.....
.....
.....

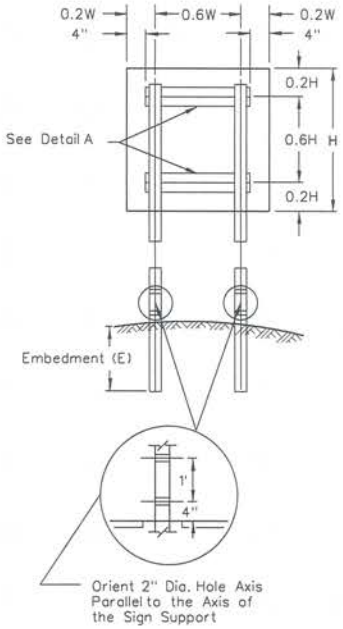

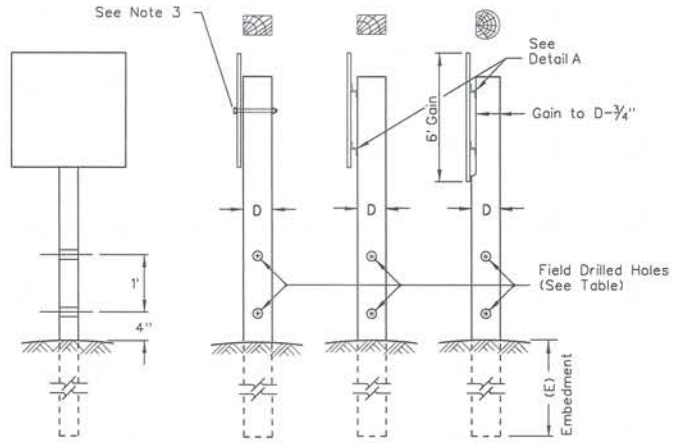

SIGN POST EMBEDMENTS	
4" x 4" = 3' 6" x 6" = 5'	4" x 6" = 4' 6" x 8" = 6'

NOTES:

1. All posts with cross sectional area larger than 4" x 4" are to be drilled as shown.
2. Z-bars will be used on all signs requiring two posts.
3. For double post installations, inner posts are those closest to roadway, and outer posts are those farthest away.

RECTANGULAR TIMBER POST SELECTION

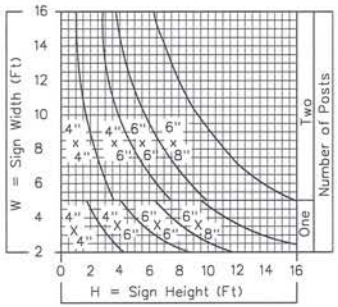

TABLE of HOLE DIAMETERS		
Post Size (D)	< 4" x 4" or 4" Dia.	> 4" x 4" or 4" Dia.
Hole Dia.	No Hole	2"

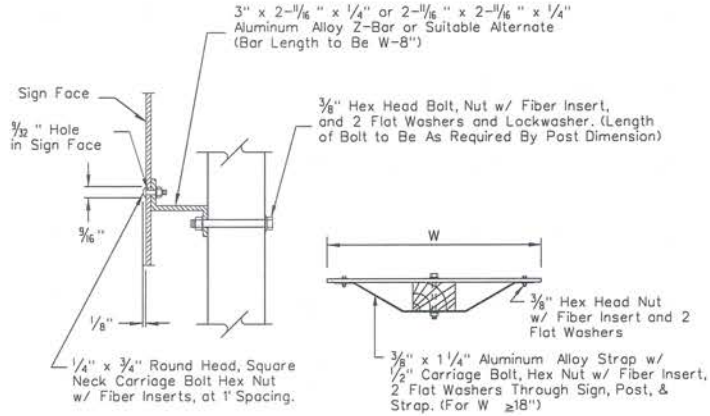

DETAIL A

STATE OF NEVADA
DEPARTMENT OF TRANSPORTATION

ROADSIDE SIGNS
TIMBER
GENERAL

T-31.5.1	(627)	Signed Original On File
ADOPTED 8/98	REVISED 12/04	CHIEF SAFETY/TRAFFIC ENGR.

Standard Plans Change Request

Requests for modifying the Standard Plans for Road and Bridge Construction must be submitted to:

NDOT Specifications Division
Attn: Standards and Manuals Supervisor
1263 South Stewart Street
Carson City, Nevada 89712

Standard Sheet No.: T-31.5.2 Page No.: T-45 Note: A separate form is required for each change.

Description of requested modification or correction:

1. Note 4 – Delete
.....
.....
.....
.....
.....
.....
.....
.....
..... (Please attach supporting information).

Reason for request:

1. Note 4 – not necessary
.....
.....
.....
.....
.....

Requestor Information: Name: Jeannie Drown Phone: 888-7678

==========

For Standards/Manuals Personnel Only: ☐ Approved ☐ Denied

Revised by: Signature: _____ Date: _____

Policy Review:
☐ CADD Standards ☐ ASTM ☐ AASHTO ☐ Design Manual ☐ Specifications

Reviewed by: Signature: _____ Date: _____

Notes: .....
.....
.....
.....
.....

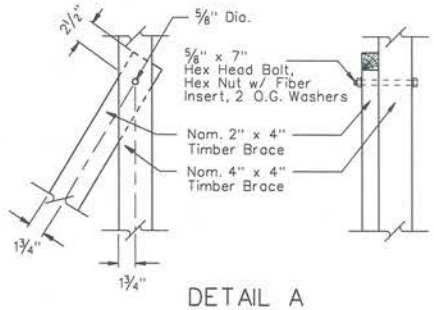

DETAIL A

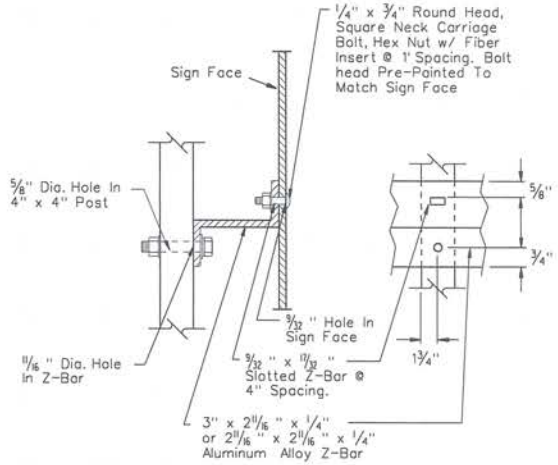

DETAIL B

NOTES:

1. All drilled holes in timber to be 5/8" diameter unless otherwise noted.
2. Back brace hole in 4" x 4" post to be drilled and fitted in field. All other holes may be shop drilled in standard position.
3. Footings to be drilled 1' - 6" diameter, 3' - 6" deep, filled with class A or AA concrete.

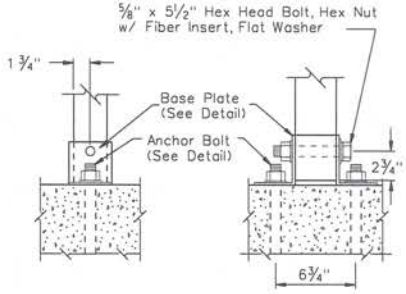

DETAIL C

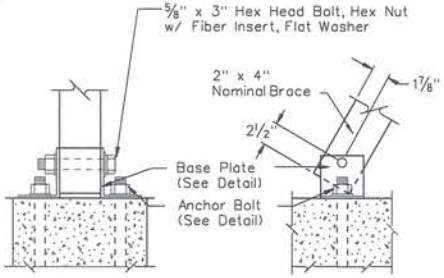

DETAIL D

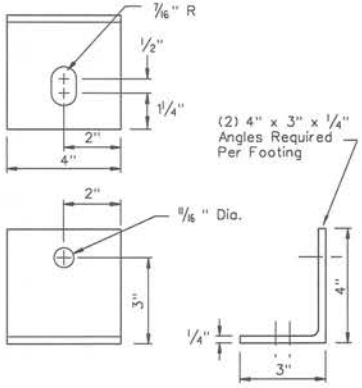

BASE PLATE DETAIL

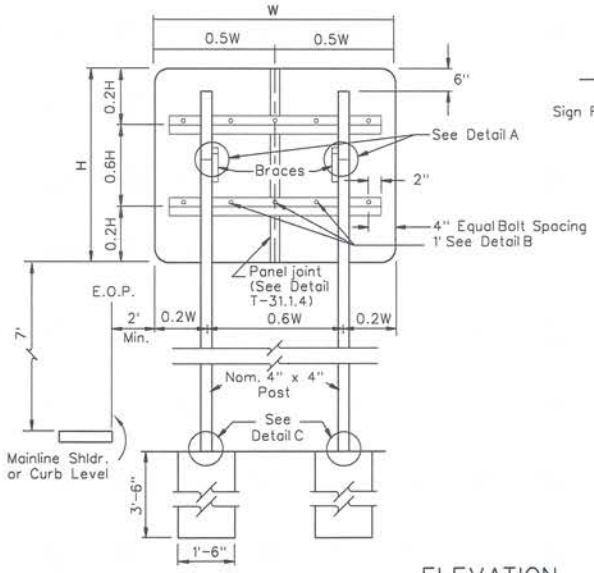

ELEVATION

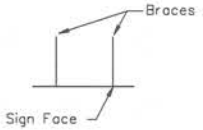

PLAN

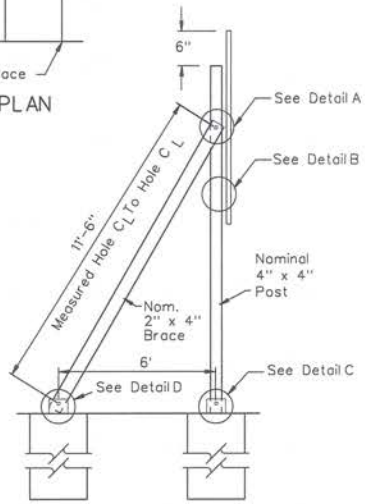

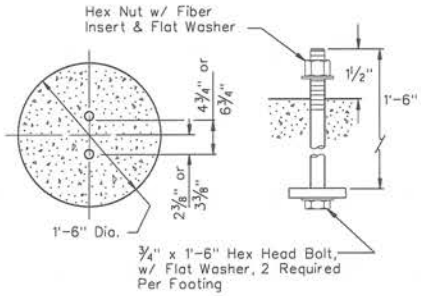

ANCHOR BOLTS DETAIL

STATE OF NEVADA
DEPARTMENT OF TRANSPORTATION

ROADSIDE SIGNS
TIMBER GORE SIGNS

T-31.5.2	(627)	Signed Original On File
ADOPTED 8/98	REVISED	CHIEF SAFETY/TRAFFIC ENGR.

Standard Plans Change Request

Requests for modifying the Standard Plans for Road and Bridge Construction must be submitted to:

NDOT Specifications Division
Attn: Standards and Manuals Supervisor
1263 South Stewart Street
Carson City, Nevada 89712

Standard Sheet No.: T-31.6.1 Page No.: T-46 Note: A separate form is required for each change.

Description of requested modification or correction:

1. Note 3 – Delete
.....
.....
.....
.....
.....
.....
.....
.....
..... (Please attach supporting information).

Reason for request:

1. Note 3 – not necessary
.....
.....
.....
.....
.....

Requestor Information: Name: Jeannie Drown Phone: 888-7678

==========

For Standards/Manuals Personnel Only: ☐ Approved ☐ Denied

Revised by: Signature: _____ Date: _____

Policy Review:
☐ CADD Standards ☐ ASTM ☐ AASHTO ☐ Design Manual ☐ Specifications

Reviewed by: Signature: _____ Date: _____

Notes: .....
.....
.....
.....
.....

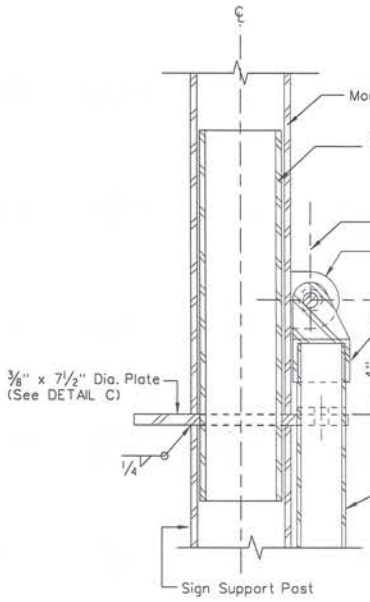

SECTION A-A

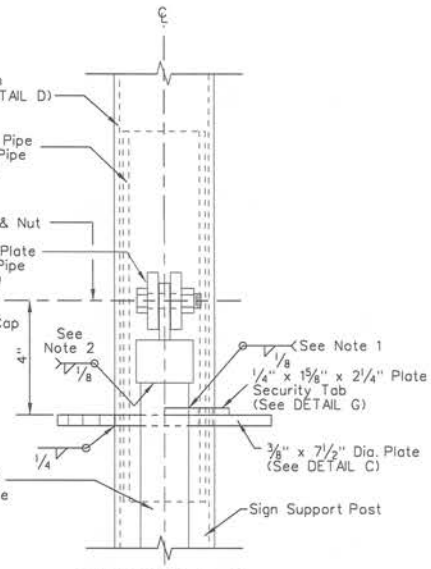

SECTION B-B

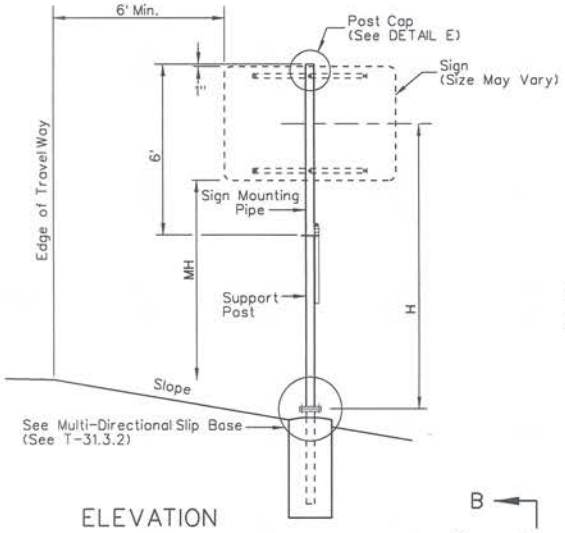

ELEVATION

NOTES:

1. Weld in field or after pre-assembly of other components in shop.
2. Tack weld at 1" increments, after 1/2" diameter hole alignment, of security tab and pivot base plate.
3. NPS = Nominal Pipe Size

LEGEND:

✳ - DUE TO THE DIFFERENCE IN MANUFACTURER'S TOLERANCES THESE DIMENSIONS, MAY HAVE TO BE ADJUSTED.

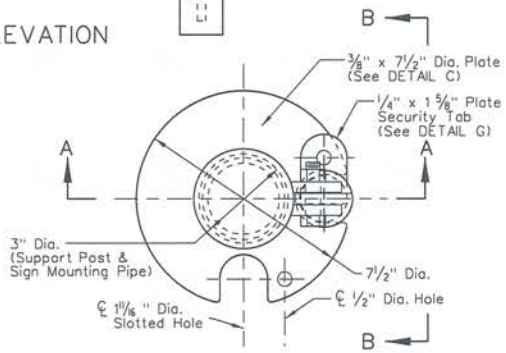

PLAN

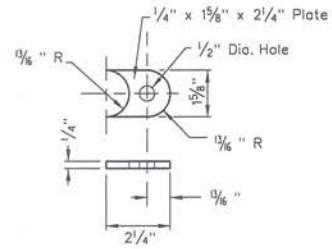

DETAIL G

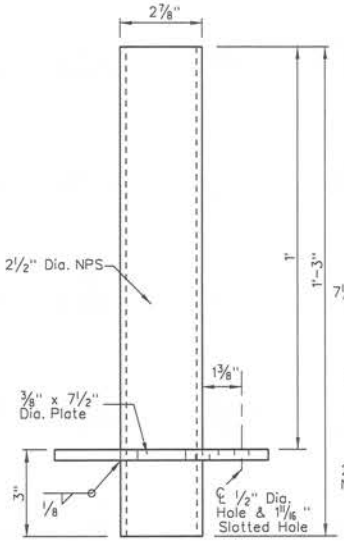

DETAIL C
PIVOT PIPE AND BASE PLATE

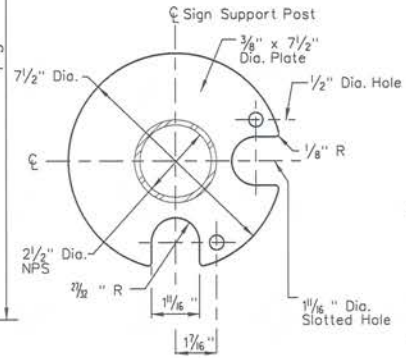

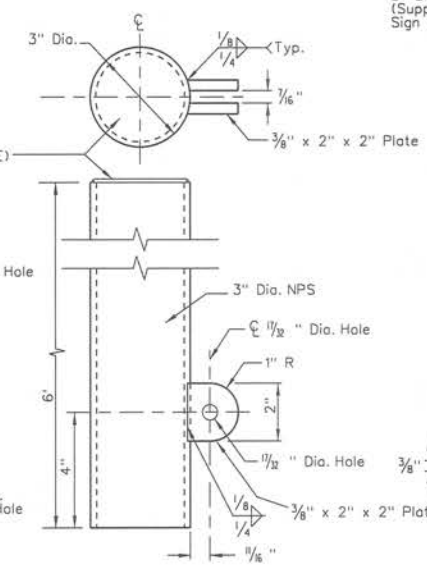

DETAIL D

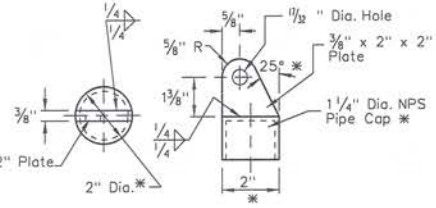

DETAIL F
HANDLE MOUNTING CAP

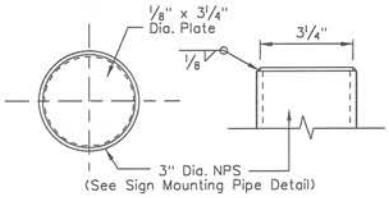

DETAIL E

STATE OF NEVADA
DEPARTMENT OF TRANSPORTATION

ROADSIDE SIGNS SPECIAL PIVOT POST

T-31.6.1	(627)	Signed Original On File
ADOPTED 8/98	REVISED	CHIEF SAFETY/TRAFFIC ENGR.

Standard Plans Change Request

Requests for modifying the Standard Plans for Road and Bridge Construction must be submitted to:

NDOT Specifications Division
Attn: Standards and Manuals Supervisor
1263 South Stewart Street
Carson City, Nevada 89712

Standard Sheet No.: T-35.1.1 ~~thru T-35.1.17~~ Page No.: T-47 Note: A separate form is required for each change.

Description of requested modification or correction:

1. Note 1. Change note to "Projects with and existing speed limit greater than 55 MPH may be temporarily reduced by 10 MPH or to 55 MPH, whichever is lower, with the concurrence from the Chief Traffic Operations Engineer. Any temporary reductions to a speed lower than 55 MPH may be reduced with concurrence from the Chief Traffic Operations Engineer and a recommendation forwarded by Traffic Operations to the Director for approval."

2. Add Note "8. All merge and shifting tapers shall be designed based on pre-work zone speeds."

..... (Please attach supporting information).

Reason for request:

1. Verbiage changed to match Work Zone Safety and Mobility Implementation Guide
2. New note 8 needed for clear direction on taper lengths

Requestor Information: Name: _____ Phone: _____

For Standards/Manuals Personnel Only: ☐ Approved ☐ Denied

Revised by: Signature: _____ Date: _____

Policy Review:
☐ CADD Standards ☐ ASTM ☐ AASHTO ☐ Design Manual ☐ Specifications

Reviewed by: Signature: _____ Date: _____

Notes: .....

(1) ADVANCE WARNING SIGN SPACING

SPEED (mph)	DISTANCE BETWEEN SIGNS (ft)		
	A	B	C
0-20	200	200	200
25-30	300	300	300
35-40	400	400	400
45-50	600	600	600
55-75	1000	1600	2640

(2) TAPER LENGTH AND CHANNELIZING DEVICE SPACING

SPEED (mph)	LENGTH FOR MERGING TAPER (L) LANE WIDTH			TAPER & CHANNELIZATION DEVICE SPACING (ft)
	10.0ft	11.0ft	12.0ft	
20	80	80	80	20
25	125	125	125	25
30	150	180	180	30
35	210	245	245	35
40	280	320	320	40
45	450	495	540	45
50	500	550	600	50
55	550	605	660	55 *
60	600	660	720	60 *
65	650	715	780	65 *
70	700	770	840	70 *
75	750	825	900	75 *

* ON RURAL INTERSTATE HIGHWAYS WHERE THE SPEED LIMIT IS 55 MPH OR GREATER, THE CHANNELIZATION DEVICE SPACING (EXCEPT FOR TAPERS) MAY BE INCREASED TO 80 FEET. WHEN INCREASED DEVICE SPACING IS USED, 3 DRUMS WILL BE PLACED DIAGONALLY AT 0.5 MILE INCREMENTS TO INDICATE THE LANE IS CLOSED.

NOTES:

1. Projects with and existing speed limit greater than 55 MPH may be temporarily reduced by 10 MPH or to 55 MPH, whichever is lower, with the concurrence from the Chief Traffic Operations Engineer. Any temporary reductions to a speed lower than 55 MPH may be reduced with concurrence from the Chief Traffic Operations Engineer and a recommendation forwarded by Traffic Operations to the Director for approval.
2. The W1-3 signs shall be used when the recommended speed on a curve is 30 mph or less, the W1-4 signs shall be used when the recommended speed is 35 mph or greater.
3. The W6-3 and R4-1 signs shall be installed alternately at 0.5 mile intervals when the lengths of crossovers exceed 0.5 mile.
4. All regulatory signs (R series) shall be black on retroreflective white.
5. All warning signs (W series) shall be black on retroreflective orange.
6. Warning signs shall be a minimum of 3' x 3' for speeds of 45 mph or less, R2-1 shall be 3' x 4'.
7. Warning signs shall be a minimum of 4' x 4' for speeds of 50 mph or greater, R2-1 shall be 4' x 5'.
8. All merge and shifting tapers shall be designed based on pre-work zone speeds.

(3) BUFFER LENGTH

SPEED (mph)	LENGTH (ft)
20	115
25	155
30	200
35	250
40	305
45	360
50	425
55	495
60	570
65	645
70	730
75	820

(4)

SHIFTING TAPER = 1/2 L
SHOULDER TAPER = 1/3 L

$\leq$ 40 mph	$L = \frac{WS^2}{60}$
$\geq$ 45 mph	$L = WS$

S = Speed(mph)

L = Taper Length(ft)

W = Width of Lateral Shift(ft)

TYPICAL APPLICATIONS:

NDOT STANDARD SHEETS T-35.1.2 THRU T-35.1.17 INCLUDE A VARIETY OF TRAFFIC CONTROL METHODS, BUT DO NOT INCLUDE A LAYOUT FOR EVERY CONCEIVABLE WORK SITUATION. TYPICAL APPLICATIONS SHOULD BE ALTERED WHEN NECESSARY TO FIT THE CONDITIONS OF A PARTICULAR TEMPORARY TRAFFIC CONTROL ZONE. FOR ADDITIONAL INFORMATION REFER TO THE LATEST EDITION OF THE MANUAL ON UNIFORM TRAFFIC CONTROL DEVICES (MUTCD) AND REVISIONS.

ADVANCE WARNING ARROW PANEL

TYPE	MINIMUM SIZE (INCHES)	POSTED SPEED
A	48 X 24	30 MPH OR LESS
B	60 X 30	35 MPH TO 50 MPH
C	96 X 48	55 MPH OR MORE

STATE OF NEVADA
DEPARTMENT OF TRANSPORTATION

TYPICAL TABLES/NOTES FOR TRAFFIC CONTROL SHEETS T-35.1.1 thru T-35.1.17

T-35.1.1	(625)	Signed Original On File
ADOPTED 9/00	REVISED 10/09	CHIEF SAFETY/TRAFFIC ENGR.

Standard Plans Change Request

Requests for modifying the Standard Plans for Road and Bridge Construction must be submitted to:

NDOT Specifications Division
Attn: Standards and Manuals Supervisor
1263 South Stewart Street
Carson City, Nevada 89712

Standard Sheet No.: T-35.1.6 Page No.: T-52 Note: A separate form is required for each change.

Description of requested modification or correction:

1. Extend A to the right side of the shoulder taper
.....
.....
.....
.....
.....
.....
.....
..... (Please attach supporting information).

Reason for request:

1. 1/3 L Shldr. Taper should be inside "A"
.....
.....
.....
.....
.....

Requestor Information: Name: Jeannie Drown Phone: 888-7678

==========

For Standards/Manuals Personnel Only: ☐ Approved ☐ Denied

Revised by: Signature: _____ Date: _____

Policy Review:
☐ CADD Standards ☐ ASTM ☐ AASHTO ☐ Design Manual ☐ Specifications

Reviewed by: Signature: _____ Date: _____

Notes: .....
.....
.....
.....
.....

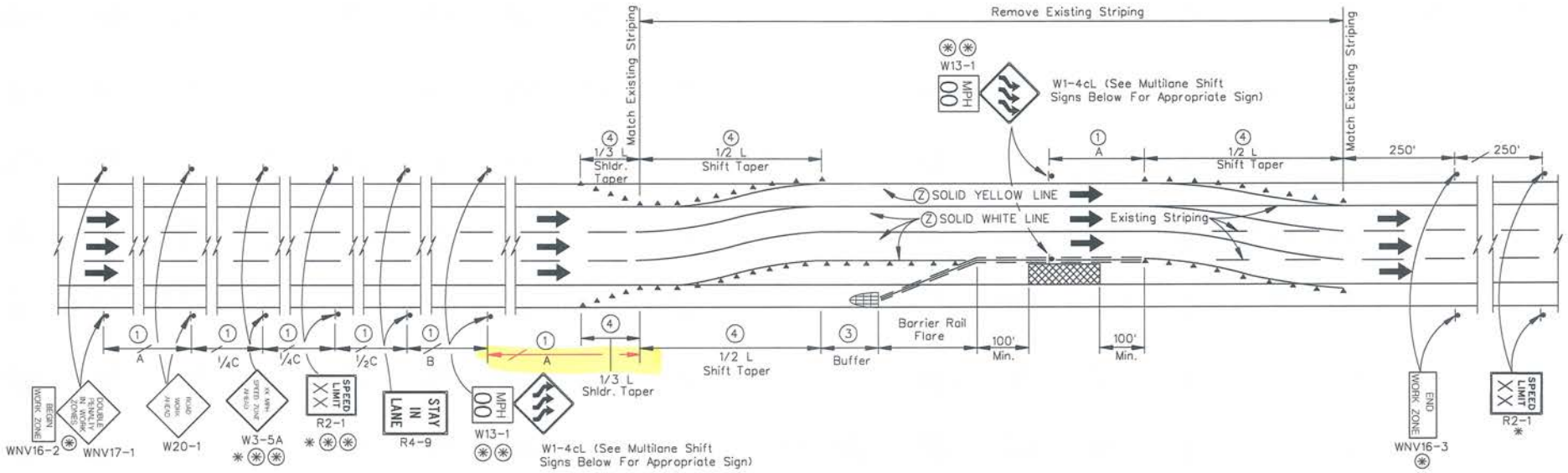

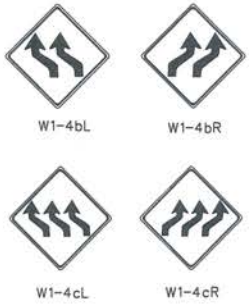

MULTILANE SHIFT SIGNS

BARRIER RAIL FLARE RATES

DESIGN SPEED	FLARE RATE
75 mph	22:1
70 mph	20:1
60 mph	18:1
55 mph	16:1
50 mph	14:1
45 mph	12:1
40 mph	10:1
30 mph	8:1

LEGEND:

- WORK AREA
- CHANNELIZING DEVICES
- ⊛ - ≥ 45 MPH
- ⊛⊛ - OPTIONAL
- ✱ - SEE NOTE 1 ON SHEET T-35.1.1
- ⓩ - TEMPORARY STRIPING
- TEMPORARY IMPACT ATTENUATOR
- TEMPORARY BARRIER RAIL

SEE SHEET T-35.1.1 FOR TABLES AND NOTES

STATE OF NEVADA
DEPARTMENT OF TRANSPORTATION

TYPICAL TRAFFIC CONTROL FOR MULTILANE SHIFT

T-35.1.6	(625)	Signed Original On File
ADOPTED 3/02	REVISED 6/06	CHIEF SAFETY/TRAFFIC ENGR.

Standard Plans Change Request

Requests for modifying the Standard Plans for Road and Bridge Construction must be submitted to:

NDOT Specifications Division
Attn: Standards and Manuals Supervisor
1263 South Stewart Street
Carson City, Nevada 89712

Standard Sheet No.: T-35.1.9 Page No.: T-54 Note: A separate form is required for each change.

Description of requested modification or correction:

1. SHOULDER WORK detail does not show channelizing device symbols going through the work area.

.....
.....
.....

(Please attach supporting information).

Reason for request:

1. Channelizing device symbols need to be shown going through the work area.

.....
.....
.....

Requestor Information: Name: Jeannie Drown Phone: 888-7678

==========

For Standards/Manuals Personnel Only: ☐ Approved ☐ Denied

Revised by: Signature: _____ Date: _____

Policy Review:
☐ CADD Standards ☐ ASTM ☐ AASHTO ☐ Design Manual ☐ Specifications

Reviewed by: Signature: _____ Date: _____

Notes: .....
.....
.....
.....
.....

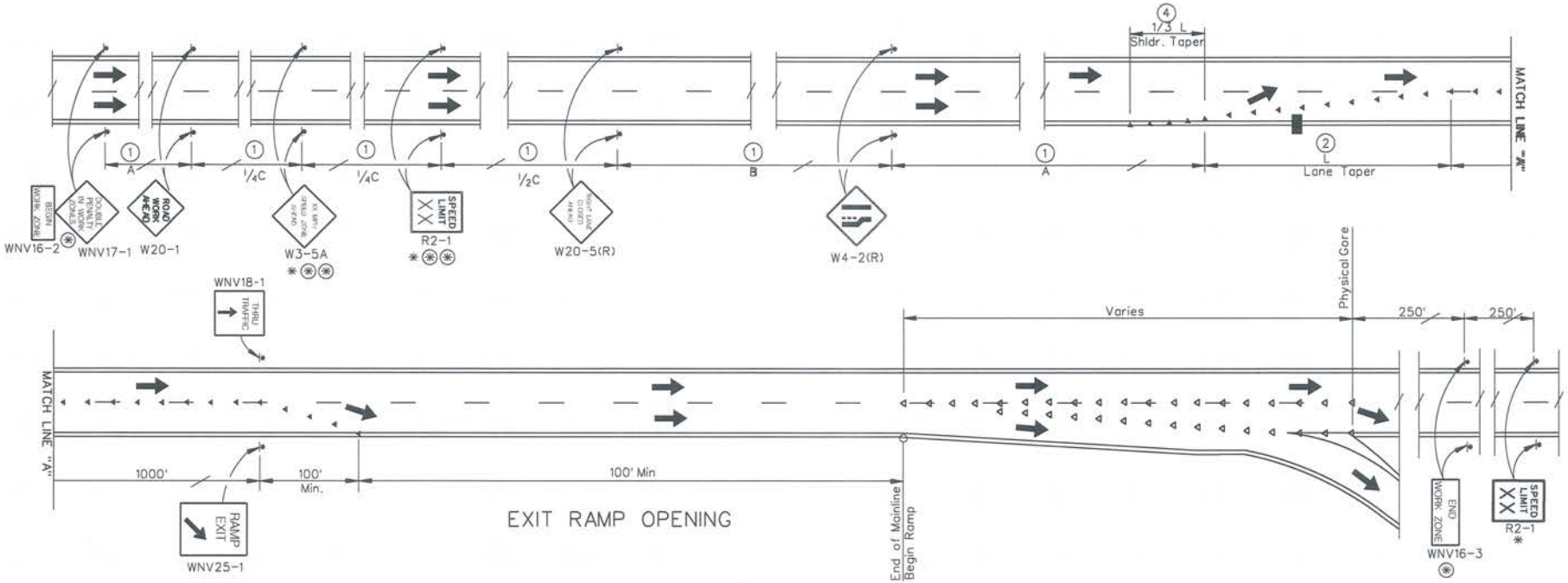

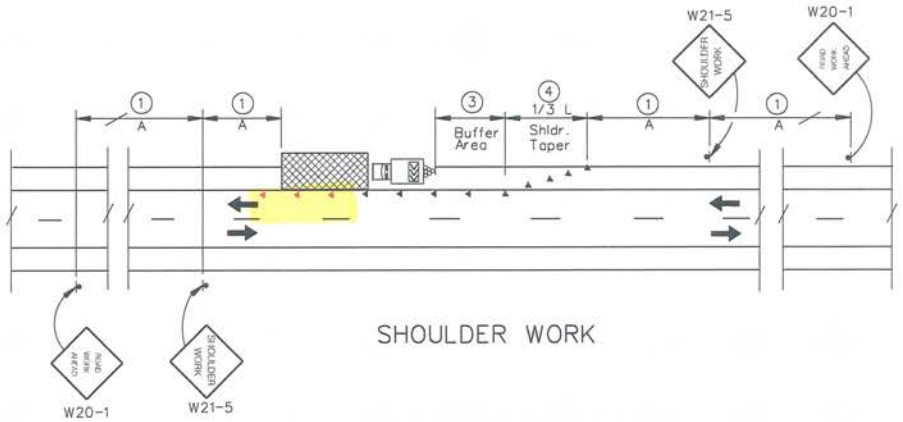

LEGEND:

- WORK AREA
- CHANNELIZING DEVICES (SEE TABLE)
- CHANNELIZING DEVICES (33' SPACING)
- ARROW BOARD
- ≥ 45 MPH
- SEE NOTE 1 ON SHEET T-35.1.1
- TRUCK MOUNTED ATTENUATOR (OPTIONAL). SEE SHEET T-35.1.4 FOR SPACING.

SEE SHEET T-35.1.1 FOR TABLES AND NOTES

STATE OF NEVADA
DEPARTMENT OF TRANSPORTATION

TYPICAL TRAFFIC CONTROL FOR EXIT RAMP AND SHOULDER WORK

T-35.1.9	(625)	Signed Original On File
ADOPTED 7/96	REVISED 5/09	CHIEF SAFETY/TRAFFIC ENGR.

Standard Plans Change Request

Requests for modifying the Standard Plans for Road and Bridge Construction must be submitted to:

NDOT Specifications Division
Attn: Standards and Manuals Supervisor
1263 South Stewart Street
Carson City, Nevada 89712

Standard Sheet No.: T-35.2 Page No.: T-63 Note: A separate form is required for each change.

Description of requested modification or correction:

1. Change Cone height from 42" to 28" Min.
2. Note 1: Replace " NCHRP Report 350" with "MASH."
3. Note 3: Add the word "Fluorescent" between Retroreflective & Orange
4. Change verbiage of first line under Traffic Drums: to:
   "Shall Have a Minimum of 2-White & 2-Retroreflective Fluorescent Orange Bands

.....

.....

(Please attach supporting information).

Reason for request:

1. Cone height is changing from 42" to a minimum of 28"
2. Note 1: "NCHRP Report 350" is outdated. It must now comply with MASH.
3. Color used is Retroreflective Fluorescent Orange
4. Color used is Retroreflective Fluorescent Orange

.....

.....

Requestor Information: Name: _____ Phone: _____

==========

For Standards/Manuals Personnel Only: ☐ Approved ☐ Denied

Revised by: Signature: _____ Date: _____

Policy Review:
☐ CADD Standards ☐ ASTM ☐ AASHTO ☐ Design Manual ☐ Specifications

Reviewed by: Signature: _____ Date: _____

Notes: .....
.....
.....
.....
.....

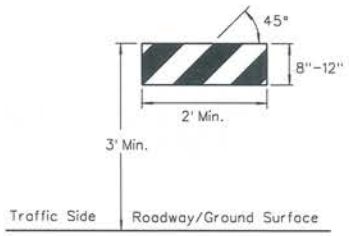

TYPE I BARRICADE

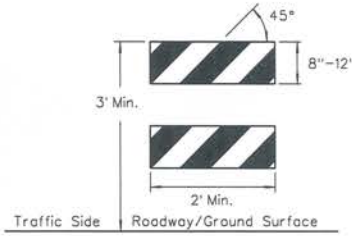

TYPE II BARRICADE

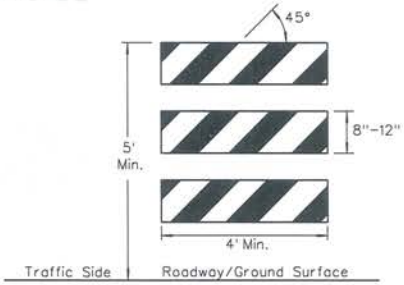

TYPE III B BARRICADE

See Note 2

	TYPE I BARRICADE	TYPE II BARRICADE	TYPE IIIB BARRICADE
Width of Stripes	Rail Length< 3'= 4" Rail Length ≥ 3'= 6"		6"
Number of Retroreflective Rail faces	2 (One Each Direction)	4 (Two Each Direction)	3 (One Direction Only)

NOTES:

1. All barricades used must comply with MASH. See qualified products list for approved products.
2. Type III B barricades used for temporary sign supports, signs shall be mounted 1' minimum from ground and comply with MUTCD current edition.
3. Markings for barricade rails shall be retroreflective fluorescent orange and white stripes sloping downward at an angle of 45 degrees in the direction of traffic as shown.

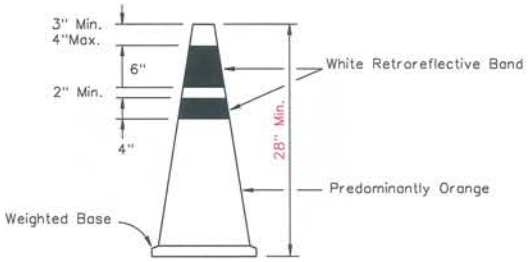

ORANGE TRAFFIC CONES

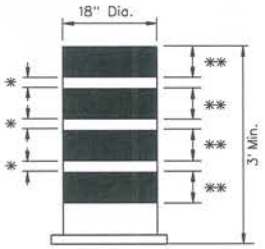

Shall Have a Minimum of 2-White and 2-Retroreflective Fluorescent Orange Bands

* 2" Max. Non-Retroreflective Material

** 4" Min.- 6" Max. Retroreflective Material

TRAFFIC DRUMS

STATE OF NEVADA
DEPARTMENT OF TRANSPORTATION

TRAFFIC CONTROL BARRICADES

T-35.2	(625)	Signed Original On File
ADOPTED 8/82	REVISED 5/09	CHIEF SAFETY/TRAFFIC ENGR.

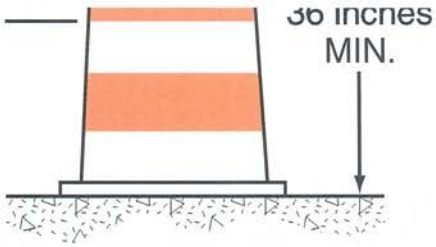

DRUM

Night and/or freeway
High-speed roadway
(≥ 45 mph)

Day and low-speed
roadway (≤ 40 mph)

TUBULAR MARKERS

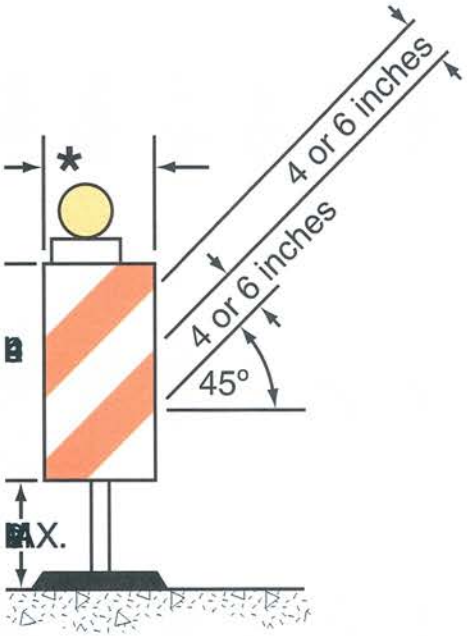

PANEL

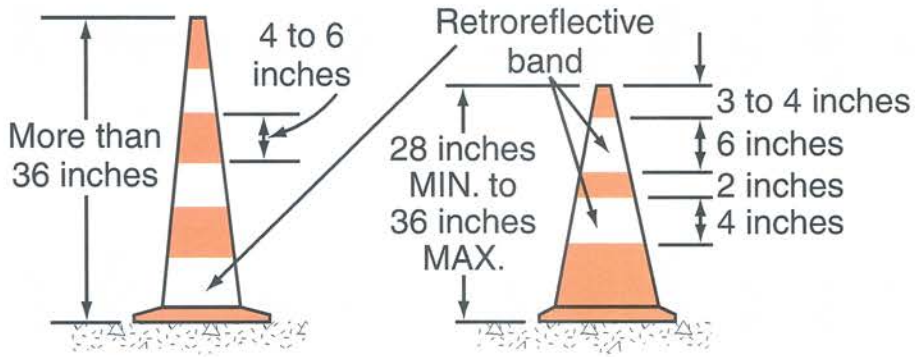

Night and/or freeway
High-speed roadway
(≥ 45 mph)

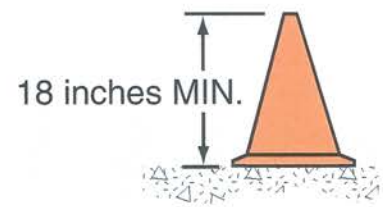

Day and low-speed
roadway (≤ 40 mph)

CONES

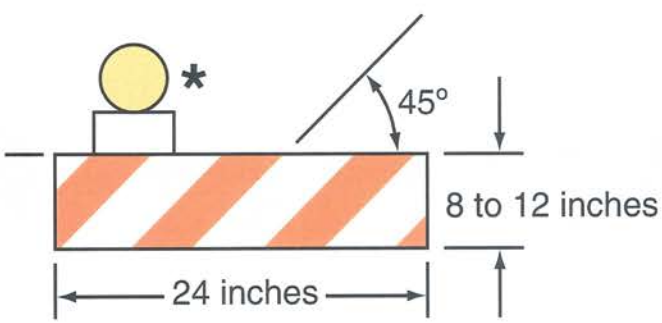

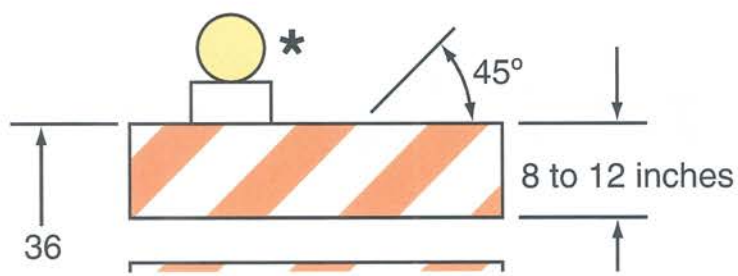

Standard Plans Change Request

Requests for modifying the Standard Plans for Road and Bridge Construction must be submitted to:

NDOT Specifications Division
Attn: Standards and Manuals Supervisor
1263 South Stewart Street
Carson City, Nevada 89712

Standard Sheet No.: T-36.1.1 Page No.: T-68 Note: A separate form is required for each change.

Description of requested modification or correction: Updated references and notes. (Please attach supporting information).

Reason for request: Post designs have been updated for new design requirements.

Requestor Information: Name: Troy Martin Phone: 888-7380

For Standards/Manuals Personnel Only: ☐ Approved ☐ Denied

Revised by: Signature: _____ Date: _____

Policy Review:
☐ CADD Standards ☐ ASTM ☐ AASHTO ☐ Design Manual ☐ Specifications

Reviewed by: Signature: _____ Date: _____

Notes:

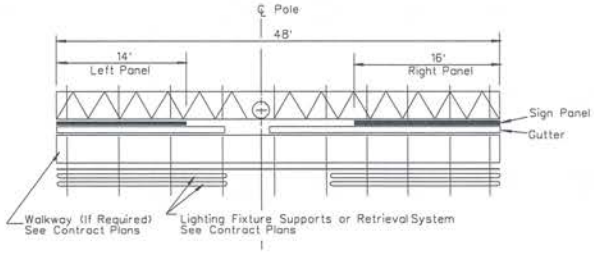

PLAN

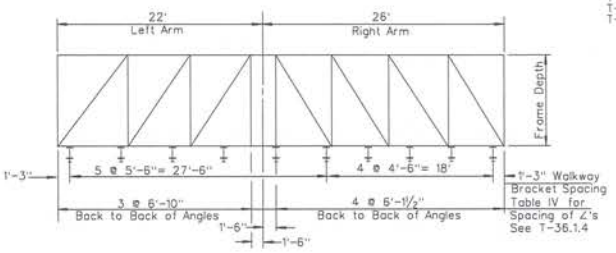

UNBALANCED SINGLE POST TYPE
EXAMPLE NO. 1

INSTRUCTIONS TO FABRICATOR

CONTRACT PLANS SHOW:

1. Sign Structure Type and Location
2. Length of Structure Frame
3. Panel Size and Locations on Structure
4. Post Type and Height To Bottom of Frame
5. Base Plate Elevation
6. Footing Elevation or Location of Alternate Pile Foundation
7. Photo Electric Cell Location If Required
8. Extent of Walkway Grating (If Required) and Type of Lighting System (Fixed or Luminaire Retrieval System)

REFER TO THE FOLLOWING SHEETS FOR DETAILS NOT SHOWN ON CONTRACT PLANS:

T-36.1.1 - Instructions & Examples
T-36.1.2 - Post Type II Thru IX
T-36.1.3 - Post II-S Thru VIII-S
T-36.1.4 - Structural Frame Members (Single Post Type)
T-36.1.5 - Structural Frame Members (Two Post Type)
T-36.1.6 - Structural Frame Details
T-36.1.7 - Frame Juncture Details
T-36.1.8 - Removable Sign Panel Frames
T-36.1.8.1 - Removable Sign Panel Frames 110" and 120" Sign Panels
T-36.1.8.2 - Sign Extension Bracket Retrofit Methods A and B
T-36.1.9 & T-36.1.10 - Walkway Details No. 1 & No. 2
T-36.1.11 - Walkway Safety Railing Details
T-36.1.12 - Alternate Pile Foundations

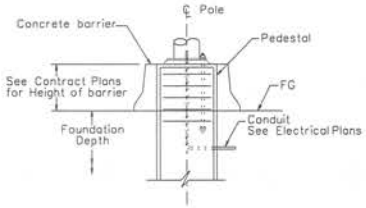

MEDIAN LOCATION

GENERAL NOTES AND SPECIFICATIONS:

1. DESIGN SPECIFICATIONS: AASHTO STANDARD SPECIFICATIONS FOR STRUCTURAL SUPPORTS FOR HIGHWAYS SIGNS, LUMINAIRES, AND TRAFFIC SIGNALS,6TH EDITION,2013.

2. CONSTRUCTION SPECIFICATIONS: STATE OF NEVADA STANDARD SPECIFICATIONS FOR ROAD AND BRIDGE CONSTRUCTION, CURRENT EDITION AND THE SPECIAL PROVISIONS THERETO.

3. LOADING

   A. WIND IMPORTANCE FACTOR, Ir = 1.0
   B. WIND SPEED = 90 MPH
   C. ICE LOAD = 3 PSF
   D. SEISMIC ACCELERATION COEFFICIENT = 0.40
   E. SOIL TYPE FOR SEISMIC DESIGN = III
   F. FATIGUE LOADING, FATIGUE IMPORTANCE FACTOR, If = 1.0

4. STRUCTURAL STEEL

   A. STRUCTURAL STEEL PLATES AND SHAPES SHALL CONFORM TO AASHTO M270 GRADE 36 OR ASTM A36.
   B. STEEL PIPE SHALL CONFORM TO ASTM A53, TYPE S, GRADE B.
   C. STEEL TUBING SHALL CONFORM TO ASTM A500, GRADE B.
   D. HOT DIP GALVANIZE STRUCTUAL STEEL AFTER FABRICATION IN ACCORDANCE WITH ASTM A123.

5. UNIT STRESSES
   A. STRUCTURAL STEEL: FY=36 ksi
   B. CONCRETE PEDESTAL, CLASS A OR AA: F'C= 4000 psi
   C. CONCRETE PILE, CLASS D OR DA: F'C = 4000 psi
   D. REINFORCING STEEL: ASTM A615, GRADE 60
   E. FOOTING PRESSURE = 1½" TONS/SQFT.

6. MINIMUM CLEARANCE TO ROADWAY = 18 FEET

7. WELDING: ALL WELDING CONTINUOUS UNLESS OTHERWISE NOTED ON THE PLANS. ALL WELDING TO BE DONE IN ACCORDANCE WITH THE STANDARD SPECIFICATIONS FOR ROAD AND BRIDGE CONSTRUCTION.

8. FINISH: ALL STEEL PARTS TO BE HOT-DIPPED GALVANIZED AFTER FABRICATION EXCEPT AS SHOWN ON PLANS OR AS CALLED FOR IN SPECIAL PROVISIONS.

9. WALKWAY BRACKETS: MAINTAIN UNIFORM SPACING WHERE POSSIBLE. MAXIMUM SPACING SHALL NOT EXCEED 5'-6".

10. LIGHTING FIXTURE SUPPORTS: WHERE DISTANCE FROM WALKWAY BRACKET TO END OF SIGN PANEL EXCEEDS 1'-4", EXTEND LIGHTING FIXTURE SUPPORTS TO NEXT WALKWAY BRACKET. SEE EXAMPLE NO. 2.

11. WALKWAY AND SAFTEY RAILING: WALKWAY (WHEN REQUIRED) TO BE CONTINUOUS FOR ENTIRE LENGTH OF FRAME FOR SINGLE POST SIGNS AND FOR 2 POST SIGNS FROM THE NEAREST POST CONTINUOUS ACROSS ALL THE SIGN PANELS. SAFETY RAILING TO PROTECT ENTIRE WALKWAY, BUT CONTINUOUS FOR NO MORE THAN 11' IN ONE UNIT.

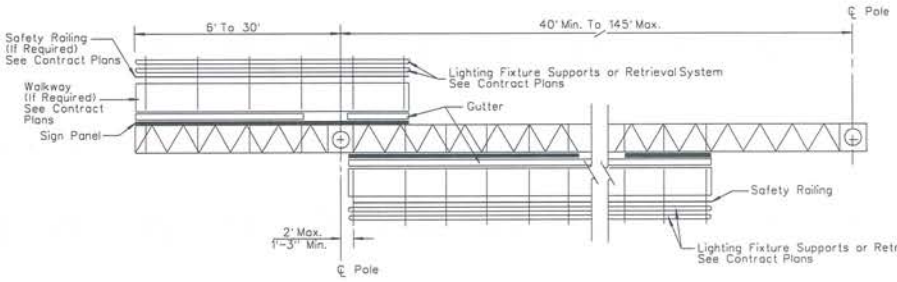

PLAN
TWO POST TYPE WITH CANTILEVER
(PART DOUBLE-FACED)
EXAMPLE NO. 3

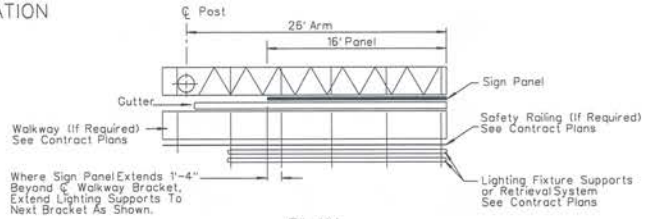

PLAN
CANTILEVER SINGLE
POST TYPE
EXAMPLE NO.2

NEVADA DEPARTMENT OF TRANSPORTATION

OVERHEAD SIGNS
INSTRUCTIONS & EXAMPLES

Signed Original On File	T-36.1.1	(627)
CHIEF BRIDGE ENGINEER	ADOPTED 11/95	REVISION 12/14

Standard Plans Change Request

Requests for modifying the Standard Plans for Road and Bridge Construction must be submitted to:

NDOT Specifications Division
Attn: Standards and Manuals Supervisor
1263 South Stewart Street
Carson City, Nevada 89712

Standard Sheet No.: T-36.1.2 Page No.: T-69 Note: A separate form is required for each change.

Description of requested modification or correction: Updated tables, notes, and details. ..... (Please attach supporting information).

Reason for request: Post designs have been updated for new design requirements. .....

Requestor Information: Name: Troy Martin Phone: 888-7380

==========

For Standards/Manuals Personnel Only: ☐ Approved ☐ Denied

Revised by: Signature: _____ Date: _____

Policy Review:
☐ CADD Standards ☐ ASTM ☐ AASHTO ☐ Design Manual ☐ Specifications

Reviewed by: Signature: _____ Date: _____

Notes: .....

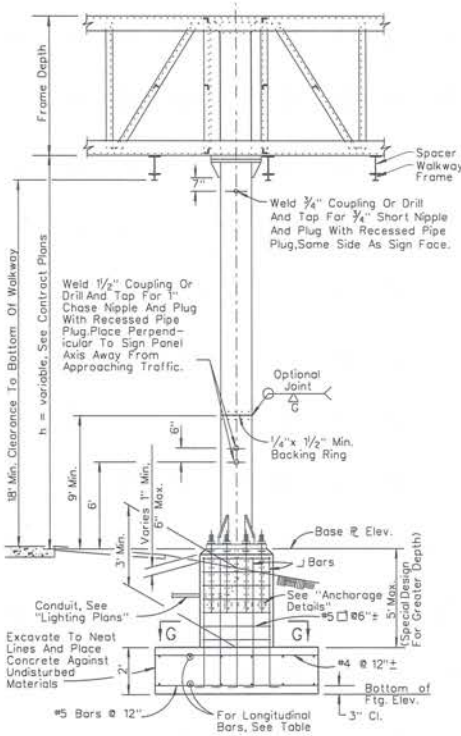

ELEVATION

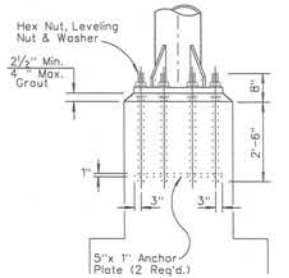

ANCHORAGE DETAILS

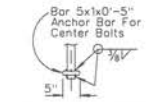

SINGLE SIDE BOLT

(Type V & VI)

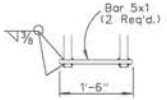

DOUBLE SIDE BOLT

(Type VII & VIII)

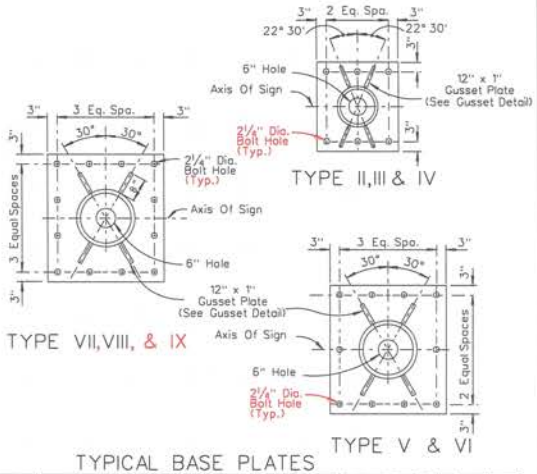

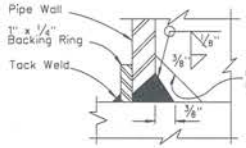

DETAIL 7
THRU POST @ BASE ℄

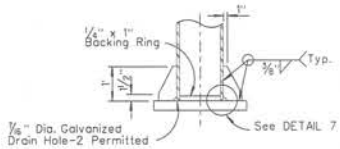

GUSSET DETAIL

TYPICAL BASE PLATES

Post Type	Pipe Size NPS	Pipe Size t(in)	Cap Plate Size	Base Plate Size (Note 2)	2"ϕ Anchor Bolts	Pedestal Size (Note 2)	Footing Size (Note 2)	Longitudinal Footing Reinforcement Top	Longitudinal Footing Reinforcement Bottom	J Bars
II	12"	3/8"	1'-7"x1'-7"x 7/8"	2'-4"x2'-1"x2"	6	2'-11"x2'-8"	7'-10"x10'	6-#4 Bars	9-#5 Bars	#5
III	14"	1/2"	1'-8"x1'-8"x 7/8"	2'-7"x2'-3"x2"	6	3'-2"x2'-10"	8'x12'	8-#5 Bars	8-#7 Bars	#6
IV	16"	1/2"	1'-10"x1'-10"x 7/8"	3'-1"x2'-9"x2"	6	3'-8"x3'-4"	8'x14'	9-#5 Bars	9-#8 Bars	#7
V	18"	1/2"	2'-0"x2'-0"x 7/8"	3'-3"x 3'-0"x 2 1/4"	10	3'-10"x3'-7"	9'x15'	9-#5 Bars	9-#9 Bars	#8
VI	20"	1/2"	2'-2"x2'-2"x1"	3'-3"x 3'-0"x 2 1/4"	10	3'-10"x3'-7"	9'x16'	8-#6 Bars	8-#10 Bars	#9
VII	24"	1/2"	2'-6"x2'-6"x1"	3'-7"x3'-3"x 2 1/4"	12	4'-3"x3'-11"	10'x17'	10-#6 Bars	10-#10 Bars	#10
VIII	24"	5/8"	2'-6"x2'-6"x1"	3'-9"x3'-6"x2 1/2"	12	4'-5"x4'-1"	10'x17'	10-#6 Bars	10-#10 Bars	#11
IX	26"	3/4"	2'-8"x2'-8"x1"	3'-9"x3'-6"x2 3/4"	12	4'-5"x4'-1"	10'x17'	10-#6 Bars	10-#10 Bars	#11

TABLE A

Pole Type	Distance To Top Of Base
II	18"
III	18"
IV	18"
V	18"
VI	20"
VII	24"
VIII	24"
IX	24"

NOTES:

1. FOR GENERAL NOTES SEE "INSTRUCTIONS AND EXAMPLES" SHEET T-36.1.1.
2. LONGER SIDE OF BASE PLATES, PEDESTALS, AND FOOTINGS SHALL BE ORIENTED PERPENDICULAR TO THE SIGN AXIS.
3. BACKFILL SHALL BE IN PLACE PRIOR TO ERECTION OF POST.
4. THREAD UPPER 8" OF ANCHOR BOLTS AND GALVANIZE UPPER 1'.
5. SPREAD FOOTING SHOWN. ALTERNATE PILE FOUNDATION IS OPTIONAL.
6. FOR REINFORCEMENT, EMBEDMENT IS CLEAR TO OUTSIDE OF BAR AND IS 2" TO MAIN REINFORCEMENT, EXCEPT AS NOTED.
7. ANCHOR PLATES MAY BE RETAINED WITH HEX NUT OR FORMED HEAD.
8. ON SINGLE POST SIGN STRUCTURES, THE POST SHALL BE RAKED OUT OF PLUMB, WITH THE USE OF THE LEVELING NUTS TO MAKE THE BOTTOM OF THE SIGN FRAME LEVEL.
9. AT FINAL POSITION OF POST ALL TOP AND BOTTOM NUTS SHALL BE TIGHTENED AGAINST BASE PLATE.
10. WHEN FOUNDATION IS LOCATED ON A STEEP SLOPE WITH EXPOSED FACE OF CONCRETE ADJACENT TO TRAFFIC, SEE DETAIL C ON "ALTERNATE PILE FOUNDATION" SHEET.
11. ANCHOR BOLTS SHALL BE ASTM F1554, GRADE 55, SI

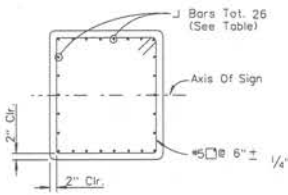

SECTION G-G

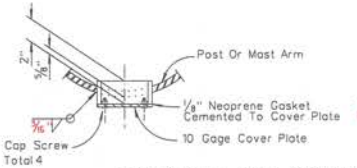

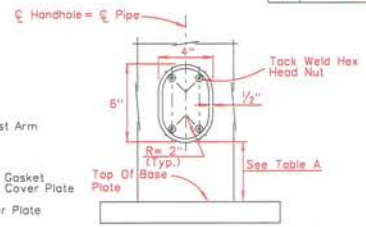

HANDHOLE AND COVER DETAILS

Locate Handhole & Cover Away From Traveled Way

NEVADA DEPARTMENT OF TRANSPORTATION

OVERHEAD SIGNS
SINGLE POST
TYPES II THRU IX

Signed Original On File	T-36.1.2	(627)
CHIEF BRIDGE ENGINEER	ADOPTED 7/96	REVISION 12/14

Standard Plans Change Request

Requests for modifying the Standard Plans for Road and Bridge Construction must be submitted to:

NDOT Specifications Division
Attn: Standards and Manuals Supervisor
1263 South Stewart Street
Carson City, Nevada 89712

Standard Sheet No.: T-36.1.2 Page No.: T-69 Note: A separate form is required for each change.

Description of requested modification or correction:

1. Elevation Detail: List dimension/size for Spacer Block (height 12") and Walkway Frame (height 4")

.....
.....
.....

(Please attach supporting information).

Reason for request:

1. Elevation detail should specify dimension/size for Spacer Block and Walkway Frame

.....
.....
.....

Requestor Information: Name: Jeannie Drown Phone: 888-7678

==========

For Standards/Manuals Personnel Only: ☐ Approved ☐ Denied

Revised by: Signature: _____ Date: _____

Policy Review:
☐ CADD Standards ☐ ASTM ☐ AASHTO ☐ Design Manual ☐ Specifications

Reviewed by: Signature: _____ Date: _____

Notes: .....
.....
.....

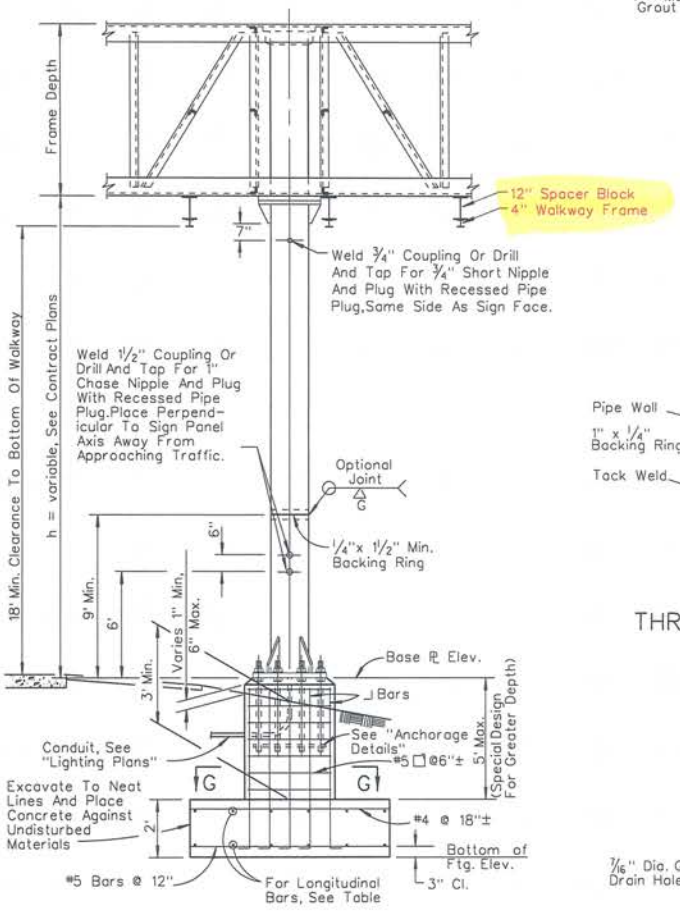

ELEVATION

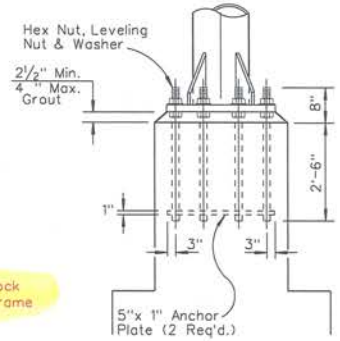

ANCHORAGE DETAILS

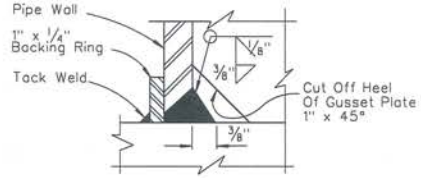

DETAIL 7
THRU POST @ BASE PL

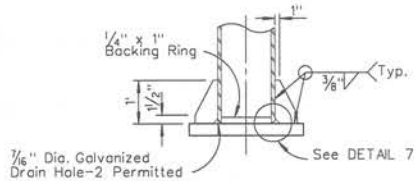

GUSSET DETAIL

NOTES:

1. For additional notes see sheet T-36.1.1.
2. Longer side of base plates, pedestals, and footings shall be oriented perpendicular to the sign axis.
3. Backfill shall be in place prior to erection of post.
4. Thread upper 8" of anchor bolts and galvanize upper 1'.
5. Spread footing shown. Alternate pile foundation is optional.
6. For reinforcement, embedment is clear to outside of bar and is 2" to main reinforcement, except as noted.
7. Anchor plates may be retained with hex nut or formed head.
8. On single post sign structures, the post shall be raked out of plumb, with the use of the leveling nuts to make the bottom of the sign frame level.
9. At final position of post all top and bottom nuts shall be tightened against base plate.
10. When foundation is located on a steep slope with exposed face of concrete adjacent to traffic, see detail C on sheet T-36.1.12.

Post Type	Pipe Size NPS	Pipe Size t(in)	Cap Plate Size	Base Plate Size (Note 2)	2"ϕ Anchor Bolts	Pedestal Size (Note 2)	Footing Size (Note 2)	Longitudinal Footing Reinforcement Top	Longitudinal Footing Reinforcement Bottom	⌋ Bars
II	12"	3/8"	1'-7"x1'-7"x 7/8"	2'-4"x2'-1"x2"	6	2'-11"x2'-8"	7'-10"x10'	6-#4 Bars	9-#5 Bars	#5
III	14"	1/2"	1'-8"x1'-8"x 7/8"	2'-7"x2'-3"x2"	6	3'-2"x2'-10"	8'x12'	8-#5 Bars	8-#7 Bars	#6
IV	16"	1/2"	1'-10"x1'-10"x 7/8"	3'-1"x2'-9"x2"	6	3'-8"x3'-4"	8'x14'	9-#5 Bars	9-#8 Bars	#6
V	18"	1/2"	2'x 2'x 7/8"	3'-3"x 3'x 2"	10	3'-10"x3'-7"	9'x15'	9-#5 Bars	9-#9 Bars	#8
VI	20"	1/2"	2'-2"x2'-2"x1"	3'-3"x 3'x 2"	10	3'-10"x3'-7"	9'x16'	8-#6 Bars	8-#10 Bars	#8
VII	24"	1/2"	2'-6"x2'-6"x1"	3'-7"x3'-3"x2"	12	4'-3"x3'-11"	10'x17'	10-#6 Bars	10-#10 Bars	#10
VIII	24"	5/8"	2'-6"x2'-6"x1"	3'-9"x3'-6"x2 1/2"	12	4'-5"x4'-1"	10'x17'	10-#6 Bars	10-#10 Bars	#11

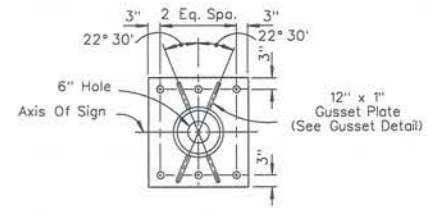

TYPE II, III AND IV

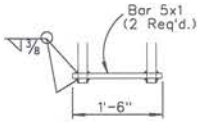

DOUBLE SIDE BOLT
TYPE VII AND VIII

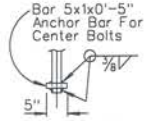

SINGLE SIDE BOLT
TYPE V AND VI

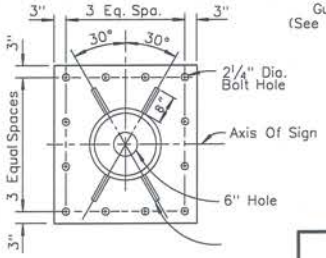

TYPE VII AND VIII

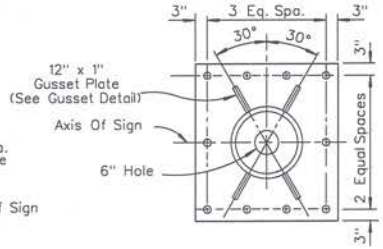

TYPE V AND VI

TYPICAL BASE PLATES

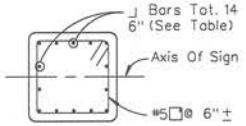

SECTION G-G

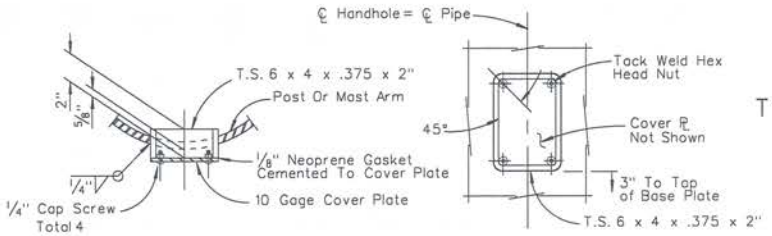

Locate Handhole and Cover Away From Traveled Way

HANDHOLE AND COVER DETAILS

STATE OF NEVADA
DEPARTMENT OF TRANSPORTATION

OVERHEAD SIGNS
SINGLE POST
TYPES II THRU VIII

T-36.1.2	(627)	Signed Original On File
ADOPTED 7/96	REVISED 1/05	CHIEF BRIDGE ENGR.

Standard Plans Change Request

Requests for modifying the Standard Plans for Road and Bridge Construction must be submitted to:

NDOT Specifications Division
Attn: Standards and Manuals Supervisor
1263 South Stewart Street
Carson City, Nevada 89712

Standard Sheet No.: T-36.1.3 Page No.: T-70 Note: A separate form is required for each change.

Description of requested modification or correction: Updated tables, notes, and details. (Please attach supporting information).

Reason for request: Post designs have been updated for new design requirements.

Requestor Information: Name: Troy Martin Phone: 888-7380

For Standards/Manuals Personnel Only: ☐ Approved ☐ Denied

Revised by: Signature: _____ Date: _____

Policy Review:
☐ CADD Standards ☐ ASTM ☐ AASHTO ☐ Design Manual ☐ Specifications

Reviewed by: Signature: _____ Date: _____

Notes:

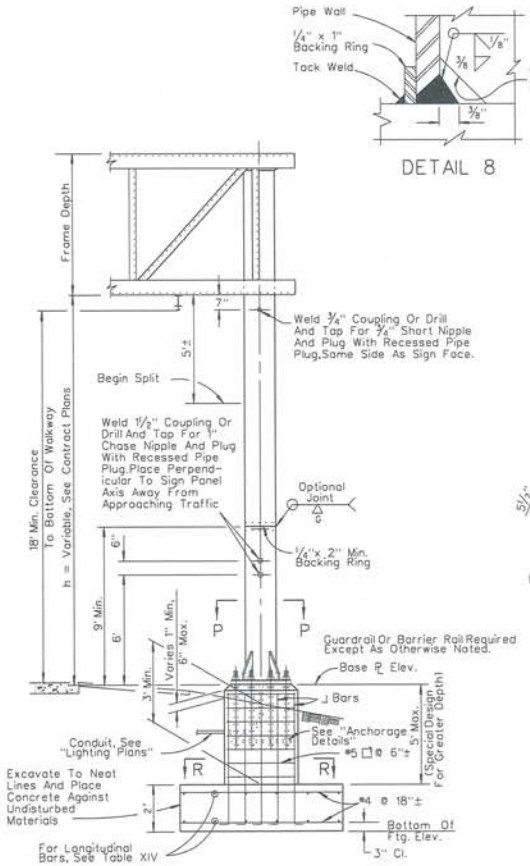

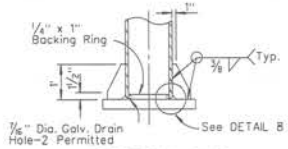

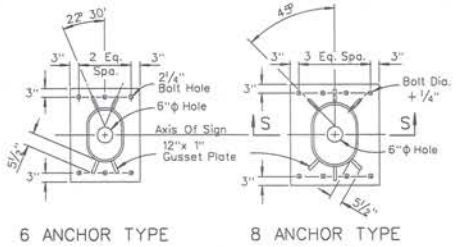

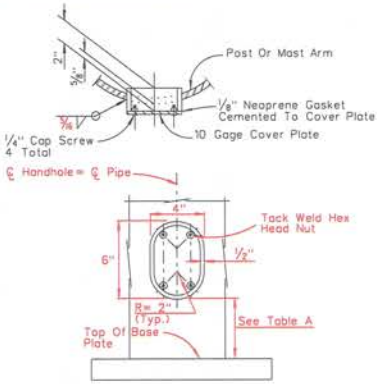

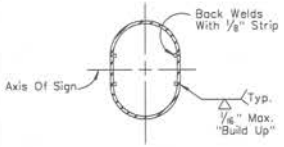

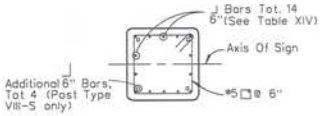

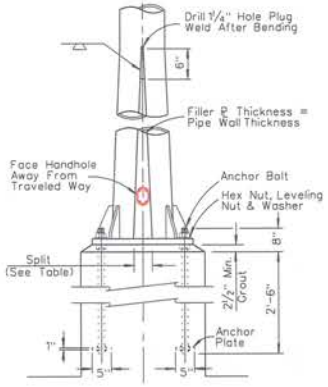

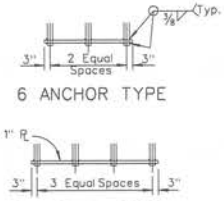

TABLE XIV

Post Type	Pipe Size NPS	Pipe Size t(in)	Split	Base Plate Size (Note 2)	Anchor Bolts	Pedestal Size (Note 2)	Footing Size (Note 2)	Longitudinal Footing Reinforcement Top	Longitudinal Footing Reinforcement Bottom	⊥ Bars
II-S	12"	3/8	5"	2'-8"x1'-11"x 2"	6-2"φ	3'-0"x2'-6"	6'x 11'	6-#4 Bars	6-#7 Bars	#6
III-S	14"	1/2	5"	2'-9"x2'-0"x 2"	6-2"φ	3'-4"x2'-7"	7'x 13'	8-#5 Bars	8-#9 Bars	#9
IV-S	16"	1/2	6"	2'-11"x2'-7"x 2"	8-2"φ	3'-6"x3'-2"	8'x 14'	8-#5 Bars	8-#9 Bars	#9
V-S	18"	1/2	7"	3'-1"x2'-9"x 2"	8-2"φ	3'-8"x3'-4"	8'x 16'	8-#5 Bars	8-#9 Bars	#9
VI-S	20"	1/2	8"	3'-5"x2'-9"x 2"	8-2"φ	4'-0"x3'-4"	9'x 17'	9-#5 Bars	9-#10 Bars	#10
VII-S	24"	1/2	8"	3'-9"x3'-3"x 2"	8-2 1/4"φ	4'-5"x3'-11"	10'x 18'	10-#6 Bars	10-#11 Bars	#11
VIII-S	24"	3/4	8"	3'-9"x3'-3"x 2 1/2"	8-2 1/2"φ	4'-5"x3'-11"	10'x 18'	10-#6 Bars	10-#11 Bars	#11

NOTES:

1. FOR GENERAL NOTES SEE "INSTRUCTIONS AND EXAMPLES" SHEET T-36.1.1
2. LONGER SIDE OF BASE PLATES, PEDESTALS, AND FOOTINGS SHALL BE ORIENTED PERPENDICULAR TO THE SIGN AXIS.
3. BACKFILL SHALL BE IN PLACE PRIOR TO ERECTION OF POST.
4. THREAD UPPER 8" OF ANCHOR BOLTS AND GALVANIZE UPPER 1'.
5. SPREAD FOOTING SHOWN. ALTERNATE PILE FOUNDATION IS OPTIONAL.
6. FOR REINFORCEMENT, EMBEDMENT IS CLEAR TO OUTSIDE OF BAR AND IS 2" TO MAIN REINFORCEMENT, EXCEPT AS NOTED.
7. ANCHOR PLATES MAY BE RETAINED WITH HEX NUT OR FORMED HEAD.
8. ANCHOR BOLTS SHALL BE ASTM F1554, GRADE 55, S1.

TABLE A

Pole Type	Distance To Top Of Base
II-S	12"
III-S	14"
IV-S	16"
V-S	18"
VI-S	20"
VII-S	24"
VIII-S	24"

NEVADA DEPARTMENT OF TRANSPORTATION

OVERHEAD SIGNS TWO POST TYPES II-S thru VIII-S

Signed Original On File	T-36.1.3	(627)
CHIEF BRIDGE ENGINEER	ADOPTED 11/95	REVISION 12/14

Standard Plans Change Request

Requests for modifying the Standard Plans for Road and Bridge Construction must be submitted to:

NDOT Specifications Division
Attn: Standards and Manuals Supervisor
1263 South Stewart Street
Carson City, Nevada 89712

Standard Sheet No.: T-36.1.4 Page No.: T-71 Note: A separate form is required for each change.

Description of requested modification or correction: Updated tables, notes, and details. ..... (Please attach supporting information).

Reason for request: Frame designs have been updated for new design requirements. .....

Requestor Information: Name: Troy Martin Phone: 888-7380

==========

For Standards/Manuals Personnel Only: ☐ Approved ☐ Denied

Revised by: Signature: _____ Date: _____

Policy Review:
☐ CADD Standards ☐ ASTM ☐ AASHTO ☐ Design Manual ☐ Specifications

Reviewed by: Signature: _____ Date: _____

Notes: .....

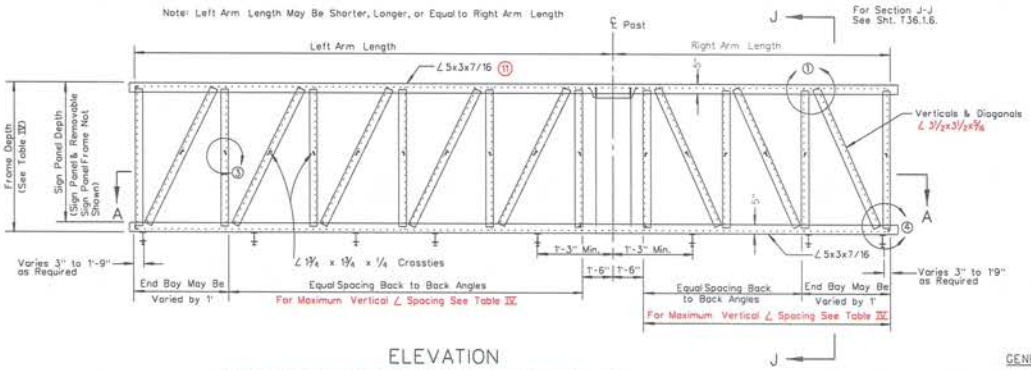

ELEVATION

11. USE 5 X 3 X ½" FOR 140" SIGN PANEL DEPTH (ARM LENGTH= 46').
USE 5 X 3 X ½" FOR 150" SIGN PANEL DEPTH (ARM LENGTHS= 45' TO 46')
USE 5 X 3 X ½" FOR 160" SIGN PANEL DEPTH (ARM LENGTHS= 44' TO 45')
USE 5 X 3 X 5/8" FOR 160" SIGN PANEL DEPTH (ARM LENGTH= 46')

TABLE IV

Sign Panel Depth	Frame Depth	Maximum Vertical ∠ Spacing	Arm Length See Note No. 10
70"	6'-4"	5'-6"	4'
80"	7'-2"	6'-0"	5'
90"	8'-0"	7'-0"	5'
100"	8'-10"	7'-0"	6'
110"	8'-10"	7'-6"	6'
120"	8'-10"	7'-6"	6'
140"	10'-6"	7'-6"	6'
160"	10'-6"	7'-6"	6'

GENERAL NOTES:

1. FOR DETAILS 1 THRU 4 SEE "STRUCTURAL FRAME DETAILS" SHT. T-36.1.6.
2. FOR SIGN PANEL FRAMES SEE "REMOVABLE SIGN PANEL FRAMES" SHT. T-36.1.8.
3. FOR CONNECTION OF FRAME TO POST SEE "FRAME JUNCTURE DETAILS" SHT. T-36.1.7.
4. FOR WALKWAY SEE "STANDARD WALKWAY DETAILS NO. 1 & NO. 2". SHTS. T-36.1.9 & T-36.1.10
5. FOR TYPICAL WALKWAY ARRANGEMENT, SPECIAL INSTRUCTIONS AND EXAMPLES. SEE "INSTRUCTIONS AND EXAMPLES" SHT. T-36.1.1.
6. MINIMUM LENGTH OF FRAME=12'. MAXIMUM LENGTH OF FRAME=60'.
7. FOR ARM LENGTHS 35' TO 40' AND SIGN DEPTHS 80" THRU 160":
   A. USE 1½ x 1½ x ¼ WIND BRACING
   B. FRAME WIDTH=CAP PLATE + ⅝".
8. ON SINGLE POST SIGN STRUCTURES, THE POST SHALL BE RAKED OUT OF PLUMB, WITH THE USE OF THE LEVELING NUTS TO MAKE THE BOTTOM OF THE SIGN FRAME LEVEL.
9. AT FINAL POSITION OF POST ALL TOP AND BOTTOM NUTS SHALL BE TIGHTENED AGAINST BASE PLATE.
10. DIAGONAL NOT REQUIRED IF ARM LENGTH IS EQUAL TO OR LESS THAN SHOWN IN THIS COLUMN OF TABLE IV.

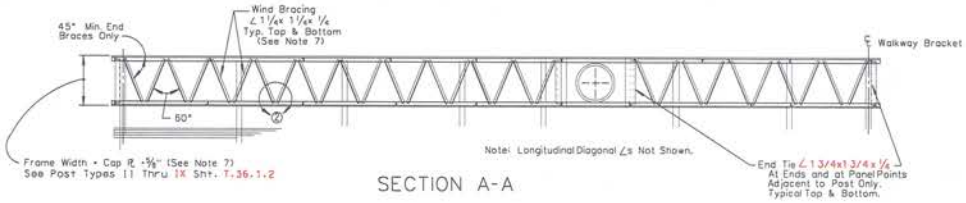

SECTION A-A

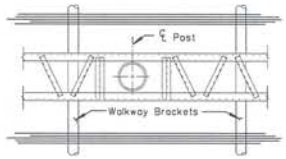

PART PLAN OF DOUBLE FACED TYPE AT POST

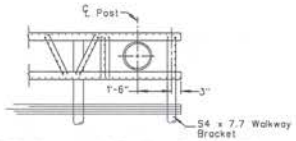

PART PLAN OF CANTILEVER TYPE AT POST

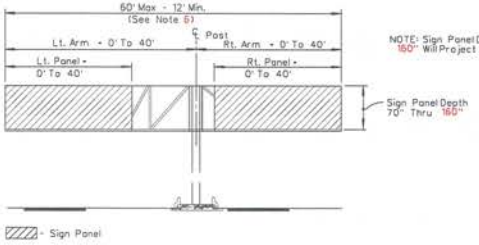

NOTE: Sign Panel Depths 110" Thru 160" Will Project Above Top Of Frame.

LIMITING DIMENSIONS OF FRAME & SIGN PANEL

NEVADA DEPARTMENT OF TRANSPORTATION

OVERHEAD SIGNS
SINGLE POST
STRUCTURAL FRAME MEMBERS

Signed Original On File	T-36.1.4 (627)
CHIEF BRIDGE ENGINEER	ADOPTED 11/95 REVISION 12/14

Standard Plans Change Request

Requests for modifying the Standard Plans for Road and Bridge Construction must be submitted to:

NDOT Specifications Division
Attn: Standards and Manuals Supervisor
1263 South Stewart Street
Carson City, Nevada 89712

Standard Sheet No.: T-36.1.5 Page No.: T-72 Note: A separate form is required for each change.

Description of requested modification or correction: Updated tables, note, and detail. ..... (Please attach supporting information).

Reason for request: Frame designs have been updated for new design requirements. .....

Requestor Information: Name: Troy Martin Phone: 888-7380

==========

For Standards/Manuals Personnel Only: ☐ Approved ☐ Denied

Revised by: Signature: _____ Date: _____

Policy Review:
☐ CADD Standards ☐ ASTM ☐ AASHTO ☐ Design Manual ☐ Specifications

Reviewed by: Signature: _____ Date: _____

Notes: .....

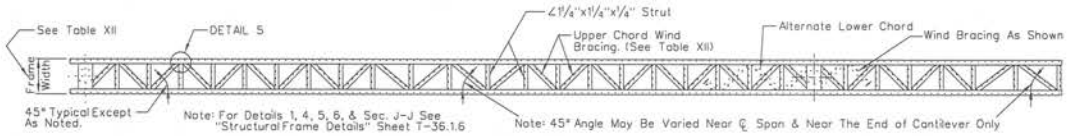

PLAN

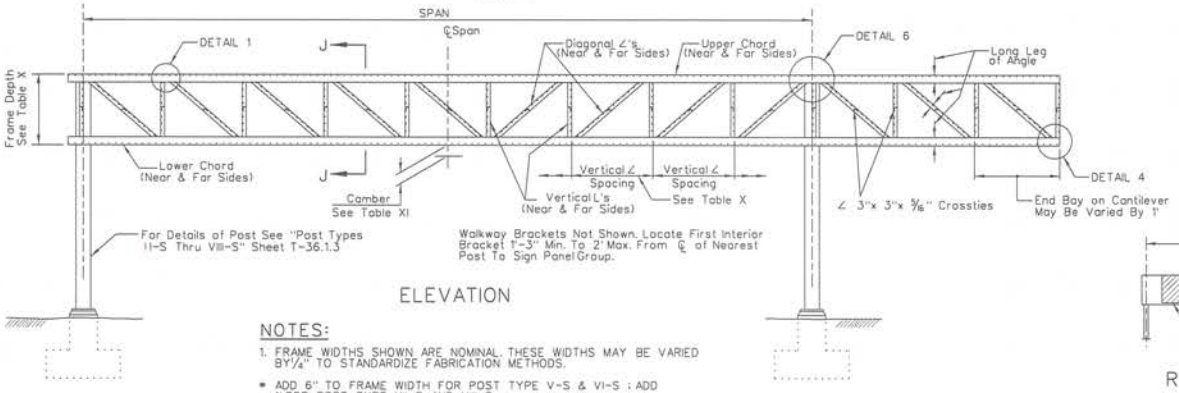

ELEVATION

NOTES:

1. FRAME WIDTHS SHOWN ARE NOMINAL. THESE WIDTHS MAY BE VARIED BY ¼" TO STANDARDIZE FABRICATION METHODS.

* ADD 6" TO FRAME WIDTH FOR POST TYPE V-S & VI-S ; ADD 1' FOR POST TYPE VII-S AND VIII-S.

** ADD 6" TO FRAME WIDTH FOR POST TYPE VII-S AND VIII-S.

TABLE X

PANEL DEPTH	FRAME DEPTH	MAX. VERTICAL ∠ SPACING
70"	6'-4"	72"
80"	7'-2"	72"
90"	8'-0"	90"
100"	8'-10"	90"
110"	8'-10"	120"
120"	8'-10"	120"
140"	10'-6"	120"
160"	10'-6"	120"

TABLE XI

CAMBER FOR FABRICATION AT ℄ SPAN	
SPAN	CAMBER
40' - 50'	½"
51' - 100'	1"
101' - 145'	1½"

FABRICATE CAMBER TO APPROXIMATE PARABOLA. CAMBER OF CANTILEVER ARM = + ½" FOR ARMS GREATER THAN 10'.

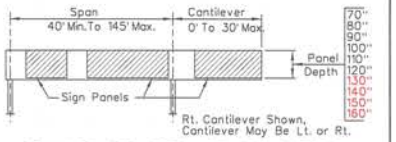

RANGE OF STRUCTURE SIZES

NOTE: Sign Panel Depths 110" Thru 160" Will Project Above Top of Frame.

Span	70" PANEL DEPTH					80" PANEL DEPTH					90" PANEL DEPTH				
	Frame Width	Chord ∠'s	Vertical ∠'s	Diagonal ∠'s	Wind Bracing	Frame Width	Chord ∠'s	Vertical ∠'s	Diagonal ∠'s	Wind Bracing	Frame Width	Chord ∠'s	Vertical ∠'s	Diagonal ∠'s	Wind Bracing
40'-50'	2'*	5 x 3½ x 7/16	3 x 3 x ¼	3 x 3 x ¼	2½ x 2½ x ¼	2'*	5 x 3½ x 7/16	3 x 3 x ¼	3 x 3 x ¼	2½ x 2½ x ¼	2'*	5 x 3½ x 7/16	3 x 3 x 5/16	3 x 3 x 5/16	2½ x 2½ x ¼
51'-60'	2'*	5 x 3½ x 7/16				2'*	5 x 3½ x 7/16				2'*	5 x 3½ x 7/16			
61'-70'	2'-6"**	5 x 3½ x 7/16				2'-6"**	5 x 3½ x 7/16				2'-6"**	5 x 3½ x 7/16			
71'-80'	2'-6"**	6 x 4 x ½				2'-6"**	6 x 4 x ½				2'-6"**	6 x 4 x ½			
81'-90'	3'	6 x 4 x ½				3'	6 x 4 x ½				3'	6 x 4 x ½			
91'-100'	3'	6 x 4 x ½				3'	6 x 4 x ½				3'	6 x 4 x ½			
101'-110'	3'	7 x 4 x ⅝				3'	7 x 4 x ⅝				3'	7 x 4 x ⅝			
111'-120'	3'	7 x 4 x ⅝				3'	7 x 4 x ⅝				3'	7 x 4 x ⅝			
121'-132'	3'	8 x 4 x ¾				3'	8 x 4 x ¾				3'	8 x 4 x ¾			
133'-145'	3'	8 x 4 x ¾				3'	8 x 4 x ¾				3'	8 x 4 x ¾			

Span	100" Panel Depth					110" AND 120" PANEL DEPTH				
	Frame Width	Chord ∠'s	Vertical ∠'s	Diagonal ∠'s	Wind Bracing	Frame Width	Chord ∠'s	Vertical ∠'s	Diagonal ∠'s	Wind Bracing
40'-50'	2'*	5 x 3½ x 7/16	3 x 3 x 5/16	3 x 3 x 5/16	2½ x 2½ x ¼	2'*	5 x 3½ x 7/16	3½ x 3½ x 5/16	3½ x 3½ x 5/16	2½ x 2½ x ¼
51'-60'	2'*	5 x 3½ x 7/16				2'-6"**	5 x 3½ x 7/16			
61'-70'	2'-6"**	5 x 3½ x 7/16				3'	5 x 3½ x 7/16			
71'-80'	3'	6 x 4 x ½				3'-6"	6 x 4 x ½			
81'-90'	3'	6 x 4 x ½				3'-6"	6 x 4 x ½			
91'-100'	3'	6 x 4 x ½				3'-6"	6 x 4 x ½			
101'-110'	3'-6"	7 x 4 x ⅝				3'-6"	7 x 4 x ⅝			
111'-120'	3'-6"	7 x 4 x ⅝				3'-6"	8 x 4 x ¾			3 x 3 x ½
121'-132'	3'-6"	8 x 4 x ¾				3'-6"	8 x 4 x ¾			3 x 3 x ½
133'-145'	3'-6"	8 x 4 x ¾				3'-6"	8 x 4 x ¾			3 x 3 x ½

Span	130" AND 140" Panel Depth					150" AND 160" PANEL DEPTH				
	Frame Width	Chord ∠'s	Vertical ∠'s	Diagonal ∠'s	Wind Bracing	Frame Width	Chord ∠'s	Vertical ∠'s	Diagonal ∠'s	Wind Bracing
70'-89'	3'-6"	6 x 4 x ½	3½ x 3½ x 5/16	3½ x 3½ x 5/16	3 x 3 x ½	3'-6"	6 x 4 x ½	3½ x 3½ x 5/16	3½ x 3½ x 5/16	3 x 3 x ½
90'-100'	3'-6"	6 x 4 x ½				3'-6"	6 x 4 x ½			
101'-110'	3'-6"	6 x 4 x ½				3'-6"	6 x 4 x ½			
111'-120'	3'-6"	6 x 4 x ½				3'-6"	6 x 4 x ½			
121'-132'	3'-6"	7 x 4 x ⅝				3'-6"	7 x 4 x ⅝			
133'-145'	3'-6"	8 x 4 x ¾				3'-6"	8 x 6 x ¾			

TABLE XII

NEVADA DEPARTMENT OF TRANSPORTATION

OVERHEAD SIGNS
TWO POST
STRUCTURAL FRAME MEMBERS

Signed Original On File	T-36.1.5	(627)
CHIEF BRIDGE ENGINEER	ADOPTED 1/95	REVISION 12/14

Standard Plans Change Request

Requests for modifying the Standard Plans for Road and Bridge Construction must be submitted to:

NDOT Specifications Division
Attn: Standards and Manuals Supervisor
1263 South Stewart Street
Carson City, Nevada 89712

Standard Sheet No.: T-36.1.6 Page No.: T-73 Note: A separate form is required for each change.

Description of requested modification or correction: Updated table and details. ..... (Please attach supporting information).

Reason for request: Frame designs have been updated for new design requirements. .....

Requestor Information: Name: Troy Martin Phone: 888-7380

==========

For Standards/Manuals Personnel Only: ☐ Approved ☐ Denied

Revised by: Signature: _____ Date: _____

Policy Review:
☐ CADD Standards ☐ ASTM ☐ AASHTO ☐ Design Manual ☐ Specifications

Reviewed by: Signature: _____ Date: _____

Notes: .....

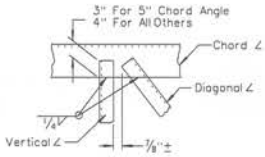

DETAIL 1

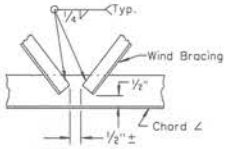

DETAIL 2

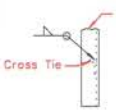

DETAIL 3

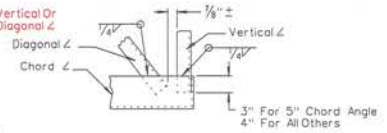

DETAIL 4

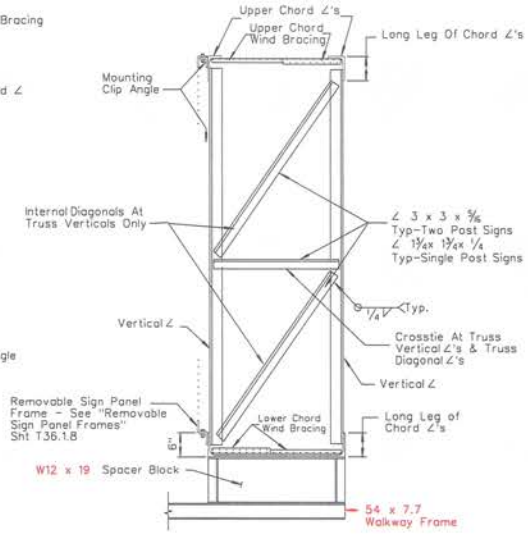

TYPICAL SECTION J-J

Note:
Diagonal ∠'s in Plane of Truss,
Not Shown. Bracing Shown is
At All Vertical ∠'s Of Truss.

SPLICE NOTES:

SPECIFICATIONS:
THE BOLTED SPLICE SHALL CONFORM TO CURRENT "SPECIFICATIONS FOR STRUCTURAL JOINTS USING ASTM A325 BOLTS".

LOCATION OF SPLICES:
THE SPLICE SHALL BE LOCATED SO AS NOT TO INTERFERE WITH MOUNTING THE WALKWAY BRACKETS OR THE CLIP ANGLES FOR THE REMOVABLE SIGN PANEL FRAME. THE WIND BRACING IN THE AREA OF THE BOLTED CHORD SPLICE SHALL BE BOLTED TO THE CHORD ANGLES WITH A 3/8" UNFINISHED BOLT, WITH HEX HEAD AND NUT, 2 CUT WASHERS AND LOCK WASHER.

BOLTS:
THE A325 BOLTS SHALL BE HIGH STRENGTH WITH AN INTERFERENCE TYPE BODY AND TORQUED TO THE REQUIRED AMOUNT AS STATED IN THE ABOVE SPECIFICATIONS.

FILLER PLATE:
THE PLATES WELDED TO THE ANGLE LEGS ON THE INSIDE SHALL BE WELDED BEFORE PUNCHING THE BOLT HOLES. THEY SHALL BE THE SAME LENGTH AS THE COVER PLATES. THE PLATES ARE NOT NECESSARY ON THE SINGLE POST SIGNS IF THE SPLICE IS LOCATED OVER 1/3 OF THE CANTILEVER LENGTH FROM THE POST ALTERNATIVE SPLICE DETAILS MAY BE USED IF APPROVED BY THE ENGINEER.

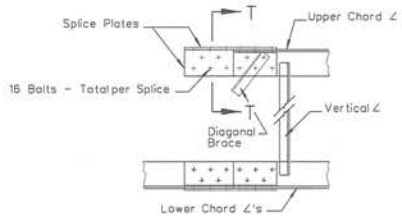

OPTIONAL
BOLTED CHORD SPLICE

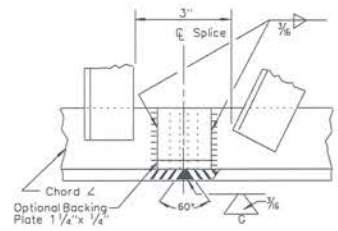

DETAIL 5

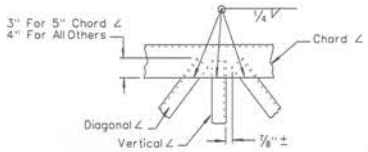

DETAIL 6

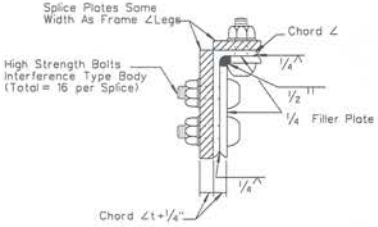

SECTION T-T

WELDED CHORD SPLICE

Note:
1. Prepare Edges By Beveling to Angle Shown.
2. Weld to 100% Full Penetration.
3. Grind Flush With Base Metal.

BOLTED CHORD SPLICE	
Chord ∠ (Inch.)	Nominal Bolt Diam. (Inch.)
TWO POST SIGNS	
5x3 1/2x 7/16	3/4
6x4x 1/2	7/8
7x4x 5/8	1
8x4x 5/8	1 1/4
8x4x 3/4	1 1/4
8x6x 3/4	1 1/4
SINGLE POST SIGNS	
5x3x 7/16	3/4

NEVADA DEPARTMENT OF TRANSPORTATION

OVERHEAD SIGNS
STRUCTURAL FRAME DETAILS

Signed Original On File	T-36.1.6	(627)
CHIEF BRIDGE ENGINEER	ADOPTED 7/96	REVISION 12/14

Standard Plans Change Request

Requests for modifying the Standard Plans for Road and Bridge Construction must be submitted to:

NDOT Specifications Division
Attn: Standards and Manuals Supervisor
1263 South Stewart Street
Carson City, Nevada 89712

Standard Sheet No.: T-36.1.7 Page No.: T-74 Note: A separate form is required for each change.

Description of requested modification or correction: Updated table. ..... (Please attach supporting information).

Reason for request: Post designs have been updated for new design requirements. .....

Requestor Information: Name: Troy Martin Phone: 888-7380

==========

For Standards/Manuals Personnel Only: ☐ Approved ☐ Denied

Revised by: Signature: _____ Date: _____

Policy Review:
☐ CADD Standards ☐ ASTM ☐ AASHTO ☐ Design Manual ☐ Specifications

Reviewed by: Signature: _____ Date: _____

Notes: .....

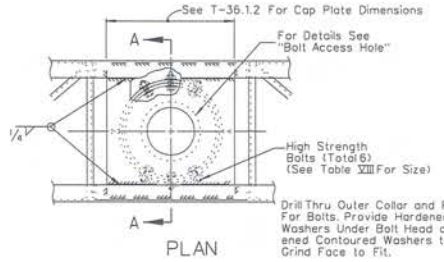

PLAN

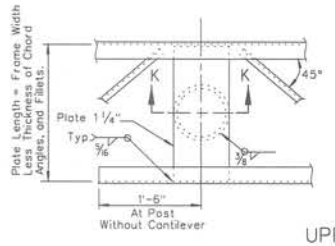

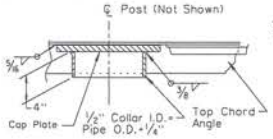

SECTION K-K
WITHOUT PHOTOELECTRIC CONTROL UNIT

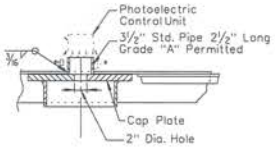

SECTION K-K
WITH PHOTOELECTRIC CONTROL UNIT

UPPER CHORD CONNECTION TO POST
TWO POST TYPE

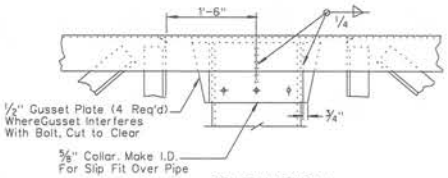

ELEVATION

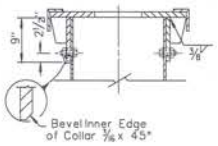

SECTION A-A

UPPER JUNCTURE CONNECTION
SINGLE POST TYPE

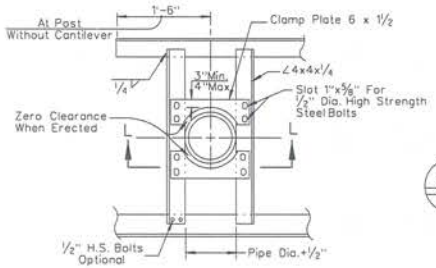

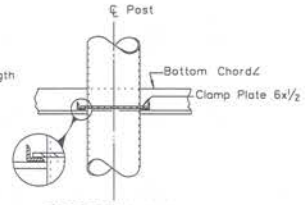

SECTION L-L

LOWER CHORD CONNECTION TO POST
TWO POST TYPE

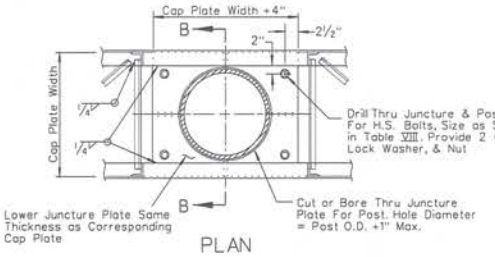

PLAN

TABLE VIII	
Post Type	Bolt Size
II	7/8"
III	1"
IV	1 1/8"
V	1 1/8"
VI	1 1/4"
VII	1 1/4"
VIII	1 1/4"
IX	1 1/4"

NOTES: (SINGLE POST TYPE)

1. DRILLED HOLES FOR UNFINISHED BOLTS SHALL NOT EXCEED NOMINAL BOLT DIAMETER BY MORE THAN 1/16".
2. ALL BOLTS, NUTS AND WASHERS SHALL BE GALVANIZED.
3. IN ALL CASES, SIGN FRAME SHALL BE SUPPORTED AT TOP OF POST. BEARING SURFACE AT TOP OF POST SHALL BE FINISHED TRUE.
4. AT LOWER JUNCTURE CONNECTION, SHIMS SHALL BE USED WHERE ANY CLEARANCE EXISTS BETWEEN BOTTOM OF FRAME AND POST ℄ PRIOR TO TIGHTENING OF BOLTS IN LOWER CONNECTION. SHIMS MAY BE GALVANIZED STEEL CUT WASHERS.

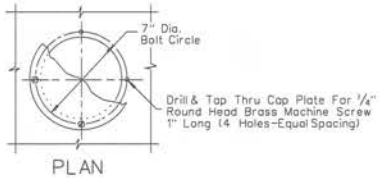

PLAN

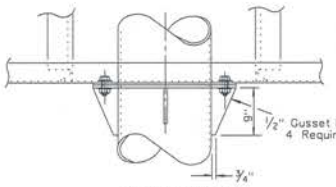

ELEVATION

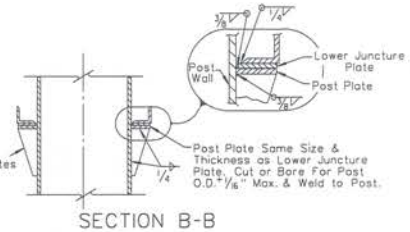

SECTION B-B

LOWER JUNCTURE CONNECTION
SINGLE POST TYPE

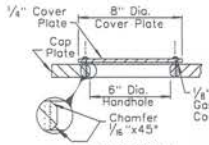

SECTION
WITHOUT PHOTOELECTRIC CONTROL UNIT

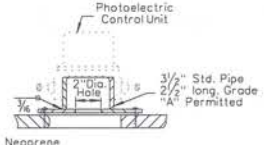

SECTION
WITH PHOTOELECTRIC CONTROL UNIT

BOLT ACCESS HOLE
SINGLE POST TYPE

NEVADA DEPARTMENT OF TRANSPORTATION

OVERHEAD SIGNS
FRAME JUNCTURE DETAILS

Signed Original On File	T-36.1.7	(627)
CHIEF BRIDGE ENGINEER	ADOPTED 7/96	REVISION 12/14

Standard Plans Change Request

Requests for modifying the Standard Plans for Road and Bridge Construction must be submitted to:

NDOT Specifications Division
Attn: Standards and Manuals Supervisor
1263 South Stewart Street
Carson City, Nevada 89712

Standard Sheet No.: T-36.1.8 Page No.: T-75 Note: A separate form is required for each change.

Description of requested modification or correction: Updated table, notes, and details. ..... (Please attach supporting information).

Reason for request: Frame designs have been updated for new design requirements. .....

Requestor Information: Name: Troy Martin Phone: 888-7380

==========

For Standards/Manuals Personnel Only: ☐ Approved ☐ Denied

Revised by: Signature: _____ Date: _____

Policy Review:
☐ CADD Standards ☐ ASTM ☐ AASHTO ☐ Design Manual ☐ Specifications

Reviewed by: Signature: _____ Date: _____

Notes: .....

FRAME NOTES:

Frames for Signs Greater than 20' in Length Shall be Fabricated In Two Sections With Left Section A Multiple of 4' in Length. See Table A. Sections Shall be Hoisted Into Place Individually and Bolted Together As Per Detail 11 Prior to Tightening of Mounting Clip Bolts.
Bolting Two Sections Together and Hoisting Simultaneously Will Not be Permitted.

Table A

Sign Length	Left Section	Right Section
22'	12'	10'
24'	12'	12'
26'	12'	14'
28'	16'	12'
30'	16'	14'
32'	16'	16'
34'	16'	18'
36'	20'	16'
38'	20'	18'
40'	20'	20'

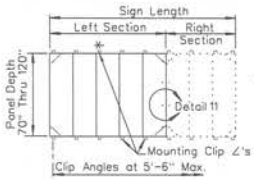

*-110" TO 160" Sign Panel Frames Will Project Above The Top Chord Of The Truss. In These Cases, The Top Clips Shall Be Bolted To Vertical Frame Members. SEE SHEET T-36.1.8.1

REMOVABLE FRAME GREATER THAN 20'

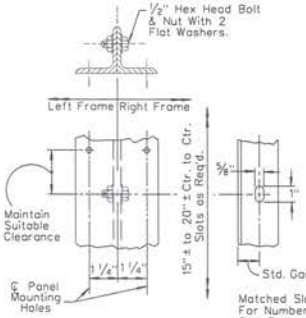

Table B

Panel Depth	No. of Slots
70"	3
80" & 90"	4
100" & 110"	5
120" TO 160"	6

DETAIL 11

Note:

Panel Mounting Holes Not Shown.
Panel Lengths Available in 2' Increments.

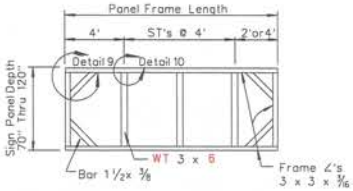

TYPICAL REMOVABLE FRAME
(4' Thru 20')

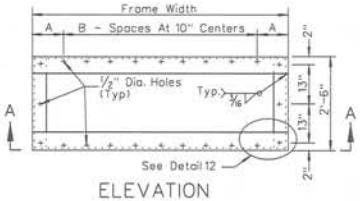

ELEVATION

Sign Panel Mounting Holes (1/2")

Frame Width	A	B
5'-6"	8"	5
7'	7"	7
8'-6"	6"	9

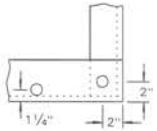

DETAIL 12

NOTES:

1. Frame ∠'s Shall Be 3"x3"x 3/16" ASTM-A36.
2. 1/2" Panel Mounting Holes Shall Be Drilled With Templates.
3. 9/16" Holes For Mounting Sign May Be Slotted 1".
4. Mount Exit Frame At Right Edge of Removable Frame So Front Faces Are Flush.

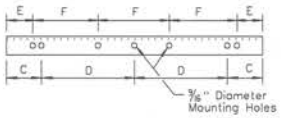

SECTION A-A

Frame Mounting Holes (9/16")

Frame Width	C	D	E	F
5'-6"	9"	2'	—	—
7'	1'-6"	2'	—	—
8'-6"	—	—	1'-3"	2'

1/2" Hex Head Bolt, Nut, (2) Flat Washers, & (2) Lockwashers

TYPICAL EXIT PANEL FRAMES

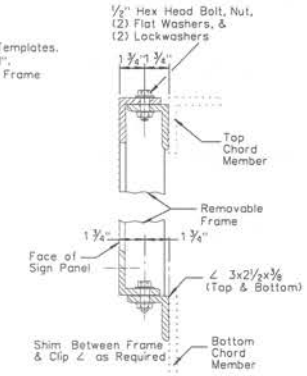

NOTES:

1. FRAMES SHALL BE ALL-WELDED CONSTRUCTION.
2. 1/2" PANEL MOUNTING HOLES SHALL BE DRILLED BY TEMPLATE. SIGN PANEL MAY BE CONSIDERED A TEMPLATE.
3. DRILLED AND TAPPED HOLES (1/4" -20 N.C.) MAY BE USED WHERE INTERFERENCE DUE TO WELDS OR STRUCTURAL MEMBERS IS ENCOUNTERED.
4. WT 3x6 FACES SHALL BE FLUSH WITH FACES OF FRAME ANGLES.
5. MOUNTING CLIP ANGLES SHALL BE LOCATED SUCH AS TO ALLOW THE TOP AND BOTTOM FRAME ANGLES OF THE REMOVABLE SIGN PANEL FRAME TO LIE ON A STRAIGHT HORIZONTAL LINE.
6. HOLES FOR MOUNTING REMOVABLE SIGN PANEL FRAME MAY BE SLOTTED 1" MAXIMUM PARALLEL TO THE AXIS OF THE SIGN.
7. WT 3x6 MAY BE CRIMPED AT ENDS TO JOIN FRAME ANGLES. FILLET WELD ALL AROUND.
8. FRAMES SHALL BE 2' MINIMUM AND 4' MAXIMUM.

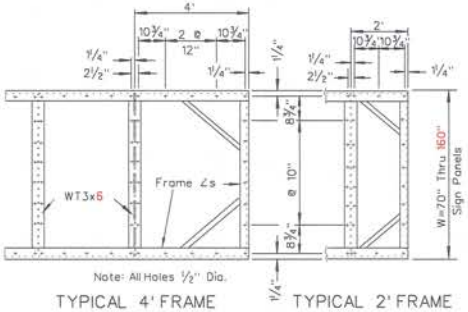

TYPICAL 4' FRAME TYPICAL 2' FRAME

MOUNTING HOLE SPACING FOR SIGN PANEL & FRAME

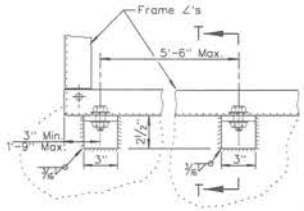

FRAME MOUNTING DETAILS

NOTE:

110" TO 160" Sign Panel Frames Will Project Above The Top Chord Of The Truss. In These Cases, The Top Clips Shall Be Bolted To Vertical Frame Members.
SEE SHEET T-36.1.8.1

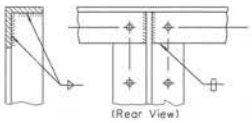

DETAIL 10

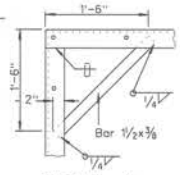

DETAIL 9

TYPICAL JOINT DETAILS

NEVADA DEPARTMENT OF TRANSPORTATION

OVERHEAD SIGNS REMOVABLE SIGN PANEL FRAMES

Signed Original On File	T-36.1.8 (627)
CHIEF BRIDGE ENGINEER	ADOPTED 7/96 REVISION 12/14

Standard Plans Change Request

Requests for modifying the Standard Plans for Road and Bridge Construction must be submitted to:

NDOT Specifications Division
Attn: Standards and Manuals Supervisor
1263 South Stewart Street
Carson City, Nevada 89712

Standard Sheet No.: T-36.1.8.1 Page No.: T-76 Note: A separate form is required for each change.

Description of requested modification or correction: Updated details. ..... (Please attach supporting information).

Reason for request: Updated details for new panel sizes. .....

Requestor Information: Name: Troy Martin Phone: 888-7380

==========

For Standards/Manuals Personnel Only: ☐ Approved ☐ Denied

Revised by: Signature: _____ Date: _____

Policy Review:
☐ CADD Standards ☐ ASTM ☐ AASHTO ☐ Design Manual ☐ Specifications

Reviewed by: Signature: _____ Date: _____

Notes: .....

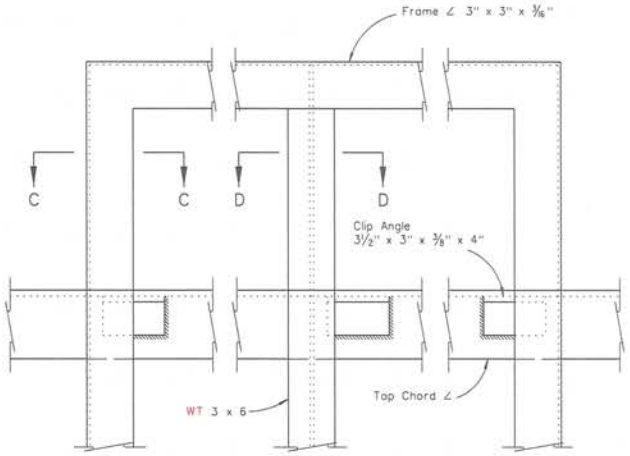

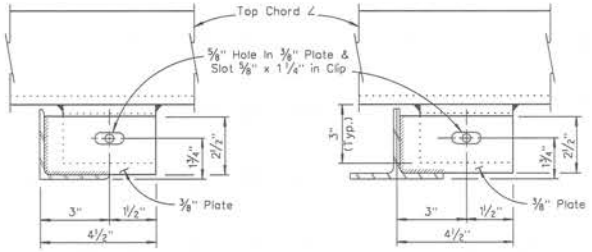

SECTION C-C SECTION D-D

ALTERNATIVE CONNECTIONS AT TOP CHORD

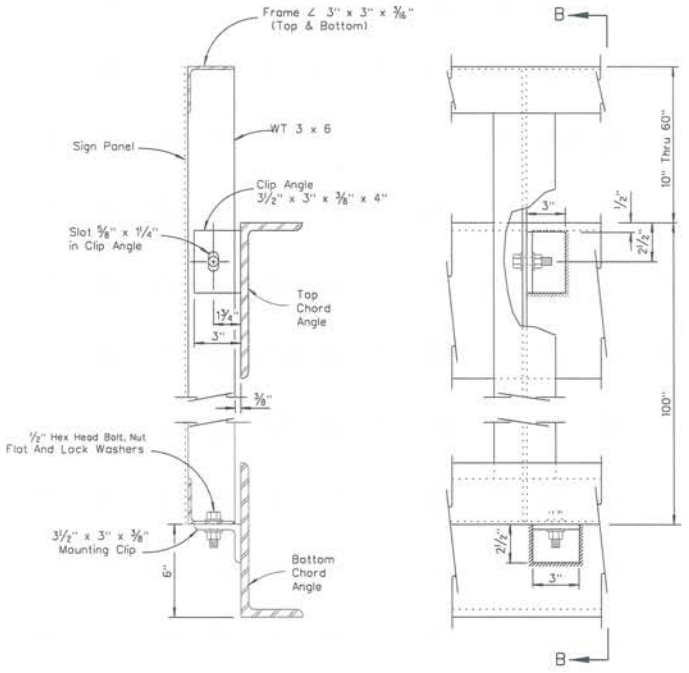

SECTION B-B ELEVATION VIEW

STEEL REMOVABLE SIGN PANEL FRAMES

NOTES:

1. FOR STEEL REMOVABLE SIGN PANEL FRAME DETAILS, SEE STANDARD PLAN T-36.1.8.
2. MINIMUM FILLET WELD IS 1/4" FOR CLIP ANGLES WELDED TO CHORD MEMBER OF TRUSS.
3. MAXIMUM SPACING OF BOTTOM CLIP ANGLE IS 5'-6".
4. TOP CLIP REQUIRED FOR EACH VERTICAL MEMBER OR REMOVABLE SIGN PANEL FRAME.

NEVADA DEPARTMENT OF TRANSPORTATION

OVERHEAD SIGNS
REMOVABLE
SIGN PANEL FRAMES
110" THRU 160" SIGN PANELS

Signed Original On File	T-36.1.8.1 (627)
CHIEF BRIDGE ENGINEER	ADOPTED 7/96 REVISION 12/14

Standard Plans Change Request

Requests for modifying the Standard Plans for Road and Bridge Construction must be submitted to:

NDOT Specifications Division
Attn: Standards and Manuals Supervisor
1263 South Stewart Street
Carson City, Nevada 89712

Standard Sheet No.: T-36.1.10.1 Page No.: T81 Note: A separate form is required for each change.

Description of requested modification or correction: ADD DIMENSIONING FOR LUMINAIRE RETRIEVAL PAYMENT

(Please attach supporting information).

Reason for request: MISSING PAYMENT METHOD

Requestor Information: Name: [illegible] Phone: 7566

For Standards/Manuals Personnel Only: ☐ Approved ☐ Denied

Revised by: Signature: _____ Date: _____

Policy Review:
☐ CADD Standards ☐ ASTM ☐ AASHTO ☐ Design Manual ☐ Specifications

Reviewed by: Signature: _____ Date: _____

Notes:

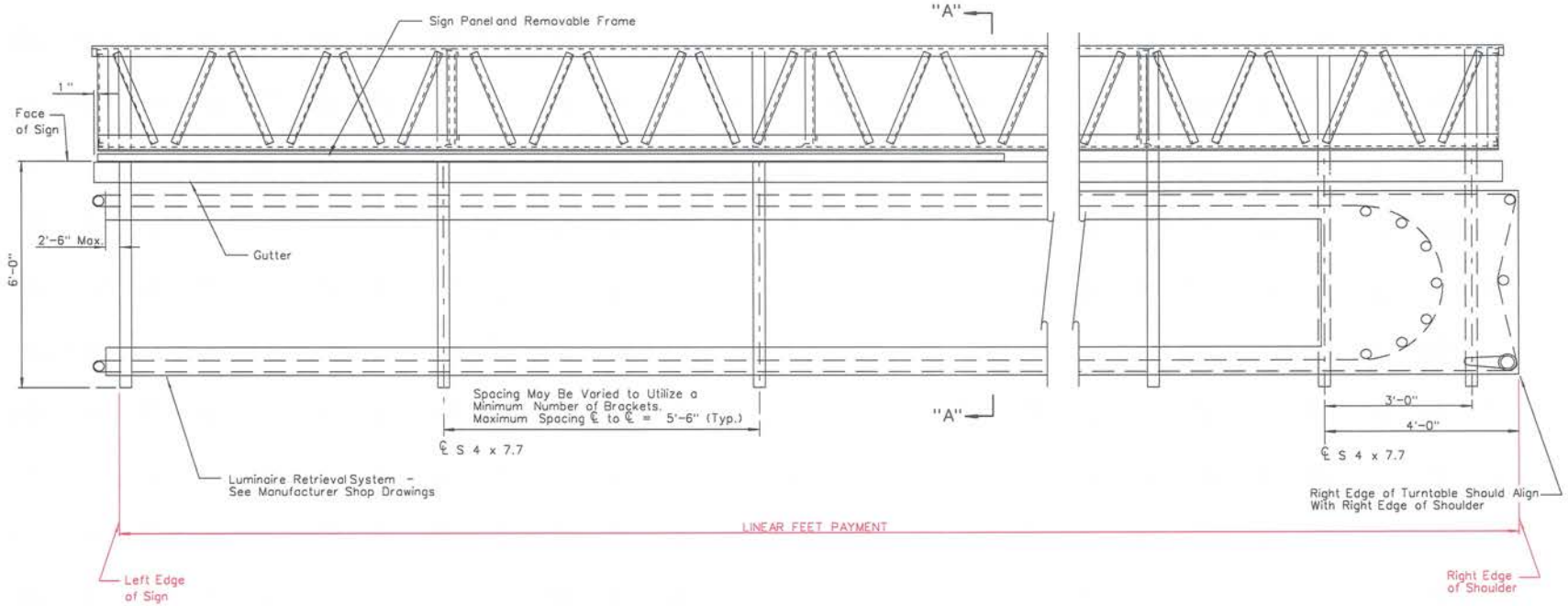

PLAN

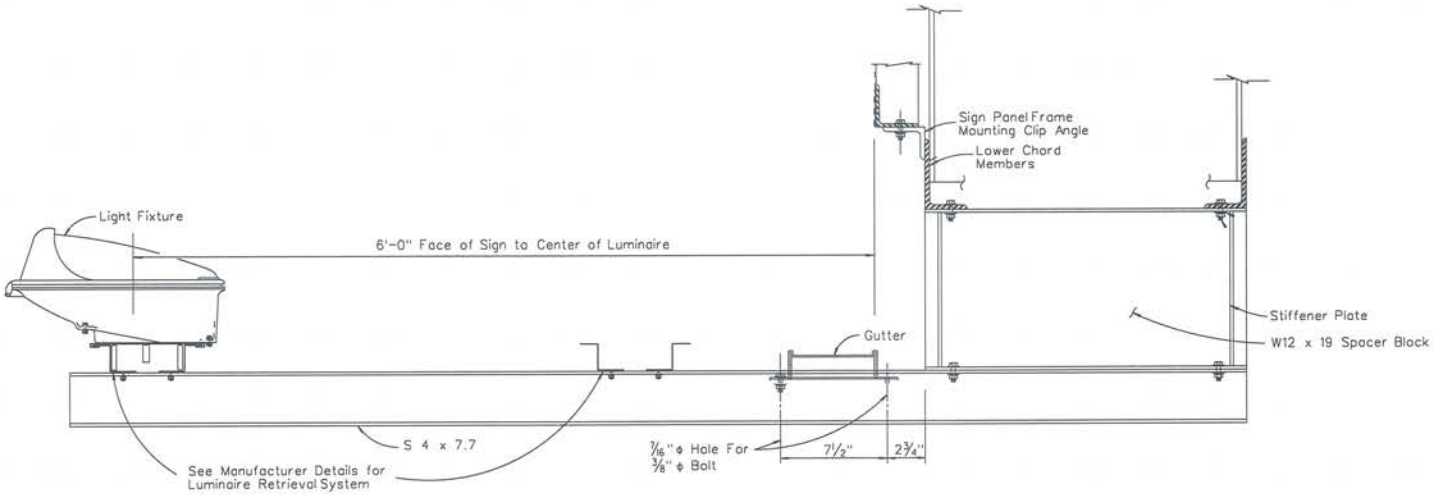

SECTION A-A

STATE OF NEVADA
DEPARTMENT OF TRANSPORTATION

OVERHEAD SIGNS
LUMINAIRE RETRIEVAL
SYSTEM
MOUNTING DETAILS

DET. *	(000)	Signed Original On File
ADOPTED */**	REVISED */**	CHIEF SAFETY/TRAFFIC ENGR.

SH199

Standard Plans Change Request

Requests for modifying the Standard Plans for Road and Bridge Construction must be submitted to:

NDOT Specifications Division
Attn: Standards and Manuals Supervisor
1263 South Stewart Street
Carson City, Nevada 89712

Standard Sheet No.: T-36.1.12 Page No.: T-83 Note: A separate form is required for each change.

Description of requested modification or correction: Updated table, notes, and details. ..... (Please attach supporting information).

Reason for request: Post foundation designs have been added for new design requirements. .....

Requestor Information: Name: Troy Martin Phone: 888-7380

==========

For Standards/Manuals Personnel Only: ☐ Approved ☐ Denied

Revised by: Signature: _____ Date: _____

Policy Review:
☐ CADD Standards ☐ ASTM ☐ AASHTO ☐ Design Manual ☐ Specifications

Reviewed by: Signature: _____ Date: _____

Notes: .....

TYPICAL BENT
No. 4 BAR
DETAILS

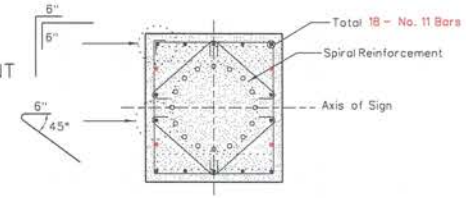

SECTION B-B

POST TYPE	ANCHOR BOLTS	PEDESTAL SIZE	REINFORCING STEEL VERTICAL	PILE DIAMETER	FOUNDATION DEPTH
II	6 - 2"	3'-8" x 3'-4"	14 - #7	36"	17'
III	6 - 2"	3'-8" x 3'-4"	14 - #8	36"	17'
IV	6 - 2"	3'-8" x 3'-4"	16 - #8	36"	17'
V	10 - 2"	3'-10" x 3'-7"	16 - #9	36"	22'
VI	10 - 2"	3'-10" x 3'-7"	16 - #10	36"	22'
VII	12 - 2"	4'-3" x 3'-11"	16 - #11	36"	23'
VIII	12 - 2"	4'-5" x 4'-1"	16 - #11	42"	24'
IX	12 - 2"	4'-5" x 4'-1"	16 - #11	42"	30'
II-S	6 - 2"	3'-6" x 3'-4"	14 - #8	36"	20'
III-S	6 - 2"	3'-6" x 3'-4"	14 - #10	36"	20'
IV-S	8 - 2"	3'-6" x 3'-4"	16 - #10	36"	20'
V-S	8 - 2"	3'-9" x 3'-4"	16 - #11	36"	23'
VI-S	8 - 2"	4'-1" x 3'-4"	16 - #11	36"	23'
VII-S	8 - 2¼"	4'-5" x 3'-11"	*24 - #11	42"	25'
VIII-S	8 - 2½"	5'-0" x 4'-4"	*24 - #11	48"	32'

* BUNDLED PAIRS

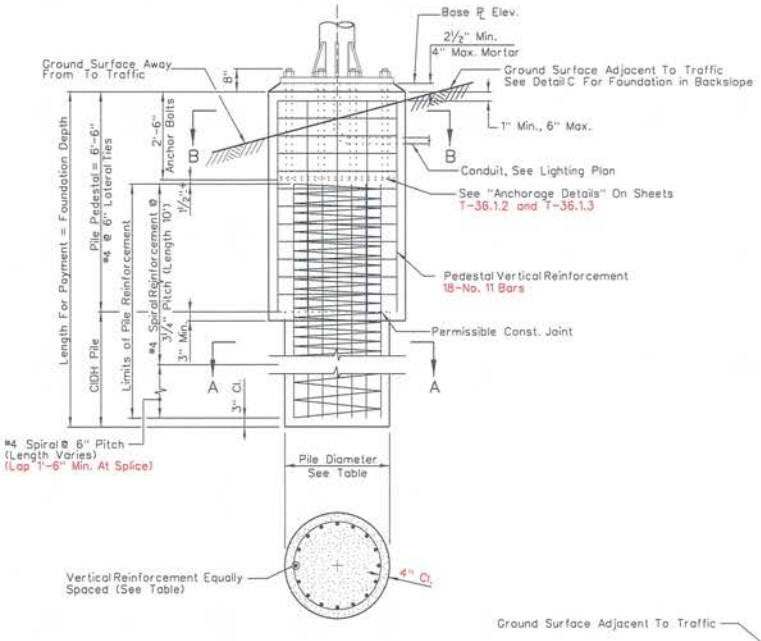

SECTION A-A

NOTES:

1. FOR ANCHOR BOLT LAYOUT SEE POST SHEETS T-36.1.2 AND T-36.1.3
2. FOR BASE PLATE ELEVATION, SEE CONTRACT PLANS.
3. PEDESTAL SHALL BE CLASS A OR AA CONCRETE. PILE CONCRETE SHALL BE CLASS D OR DA.
4. LONGER SIDE OF BASE PLATES AND PEDESTALS SHALL BE ORIENTED PERPENDICULAR TO THE SIGN AXIS.
5. PRIOR TO ERECTION OF THE POST, BACKFILL WHICH IS EQUIVALENT TO THE SURROUNDING MATERIAL SHALL BE IN PLACE.
6. PEDESTAL SHALL BE FORMED 6" MINIMUM BELOW GROUND SURFACE. REMAINDER MAY BE PLACED AGAINST UNDISTURBED MATERIAL.
7. SLOPE PROTECTION REQUIRED WHEN INDICATED ON THE CONTRACT PLANS.

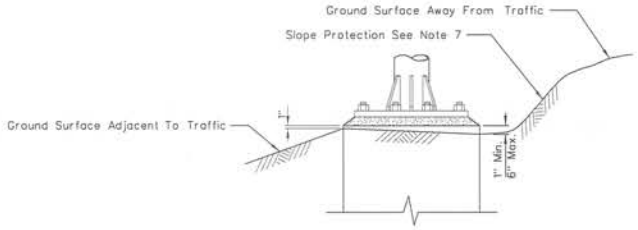

DETAIL C

NEVADA DEPARTMENT OF TRANSPORTATION

OVERHEAD SIGNS
ALTERNATE PILE FOUNDATION

Signed Original On File	T-36.1.12	(627)
CHEF BRIDGE ENGINEER	ADOPTED 7/96	REVISION 12/14

Standard Plans Change Request

Requests for modifying the Standard Plans for Road and Bridge Construction must be submitted to:

NDOT Specifications Division
Attn: Standards and Manuals Supervisor
1263 South Stewart Street
Carson City, Nevada 89712

Standard Sheet No.: T-36.1.13 Page No.: T-84 Note: A separate form is required for each change.

Description of requested modification or correction: Updated table and detail. ..... (Please attach supporting information).

Reason for request: Frame designs have been updated for new design requirements. .....

Requestor Information: Name: Troy Martin Phone: 888-7380

==========

For Standards/Manuals Personnel Only: ☐ Approved ☐ Denied

Revised by: Signature: _____ Date: _____

Policy Review:
☐ CADD Standards ☐ ASTM ☐ AASHTO ☐ Design Manual ☐ Specifications

Reviewed by: Signature: _____ Date: _____

Notes: .....

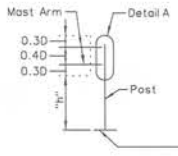

DOUBLE MAST ARM SERIES
TYPE C1

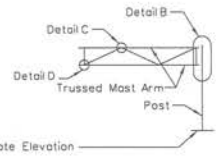

TRUSSED MAST ARM SERIES
TYPE C2

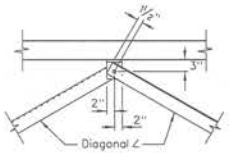

DETAIL C

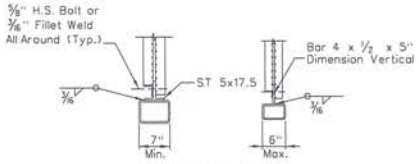

VIEW J-J

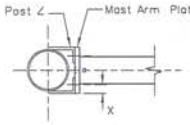

SECTION F-F

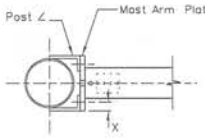

SECTION G-G

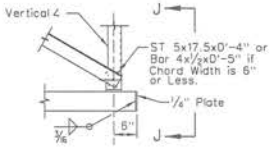

DETAIL D

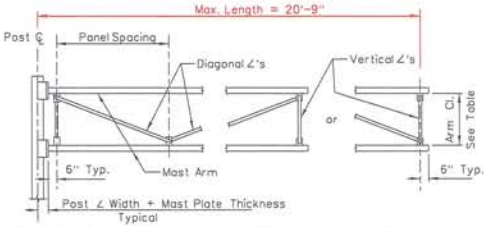

SIGN DEPTH INCHES	ARM CLEARANCE	MAX. PANEL SPACING	VERTICAL ANGLE	DIAGONAL ANGLE
D=40"-70"	2'	4'-4"	∠ 2 1/2x2 1/2x1/4	∠ 2 1/2x2 1/2x1/4
D=80"-100"	3'	6'-6"	∠ 3 1/2x3 1/2x1/4	∠ 3 1/2x3 1/2x1/4

TRUSS FRAMING DATA

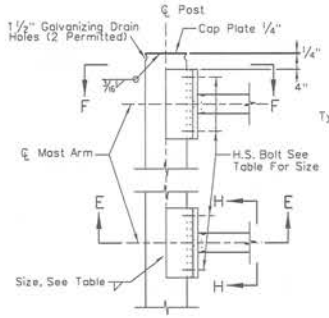

DETAIL A

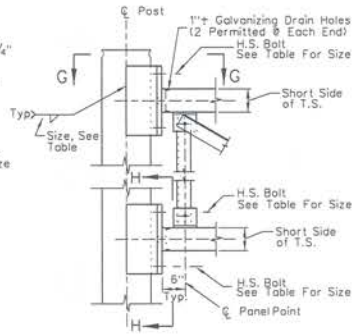

DETAIL B

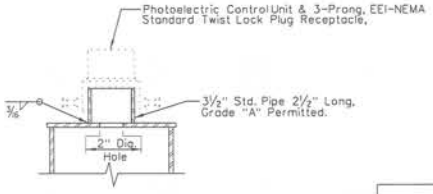

PHOTOELECTRIC CONTROL UNIT

POST ANGLES

POST SIZE	ANGLE	X	WELD
6	∠5X3X1/2	1 3/4"	1/4
8	∠6X4X5/8	2 1/4"	1/4
10	∠7X4X5/8	2 1/4"	1/4
12	∠8X4X3/4	2 1/4"	5/16
14	∠8X4X3/4	2 1/4"	5/16

MAST ARM PLATE

TWO ARMS	TRUSSED ARMS	PLATE	H.S. BOLT
TS 3X3X8.80		3/4"	1/2"
TS 4X4X12.02		1"	5/8"
TS 5X5X15.42		1"	3/4"
TS 6X6X18.82		1"	3/4"
TS 7X7X22.04	TS 5X3X16.84	1 1/4"	3/4"
	TS 6X4X21.94	1 1/4"	7/8"
	TS 7X5X27.04	1 1/4"	7/8"
	TS 8X6X31.73	1 1/4"	7/8"
	TS 10X6X36.83	1 1/4"	1"

POST TO ARM FRAMING DATA

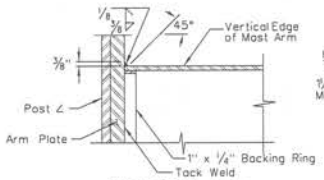

SECTION E-E

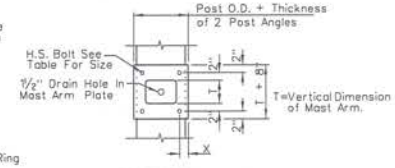

SECTION H-H
Bottom Connection Shown, Top Similar

NOTES:

1. FOR POST CONNECTION TO BASE PLATE SEE T-36.1.16.
2. FOR MAST ARM LENGTH AND MAST ARM TO SIGN PANEL CONNECTIONS SEE T-36.1.14.

FOR GENERAL NOTES SEE T-36.1.16

NEVADA DEPARTMENT OF TRANSPORTATION

OVERHEAD SIGNS
LIGHTWEIGHT
TYPE C
CONNECTION DETAILS

Signed Original On File | T-36.1.13 | (627)
CHIEF SAFETY/TRAFFIC ENGR. | ADOPTED 11/95 | REVISION 12/14

Standard Plans Change Request

Requests for modifying the Standard Plans for Road and Bridge Construction must be submitted to:

NDOT Specifications Division
Attn: Standards and Manuals Supervisor
1263 South Stewart Street
Carson City, Nevada 89712

Standard Sheet No.: T-36.1.16 Page No.: T-87 Note: A separate form is required for each change.

Description of requested modification or correction: Updated notes and detail. ..... (Please attach supporting information).

Reason for request: Notes and detail have been updated for new design requirements. .....

Requestor Information: Name: Troy Martin Phone: 888-7380

==========

For Standards/Manuals Personnel Only: ☐ Approved ☐ Denied

Revised by: Signature: _____ Date: _____

Policy Review:
☐ CADD Standards ☐ ASTM ☐ AASHTO ☐ Design Manual ☐ Specifications

Reviewed by: Signature: _____ Date: _____

Notes: .....

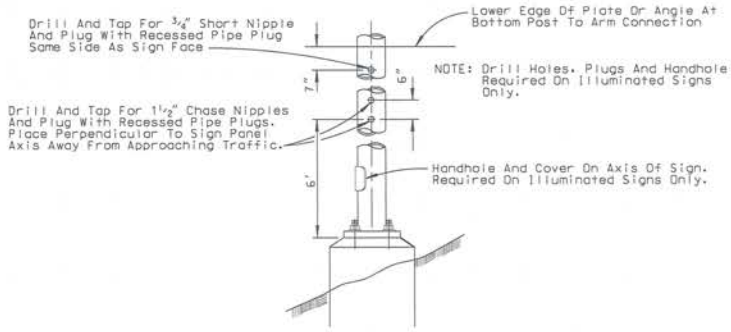

ELEVATION

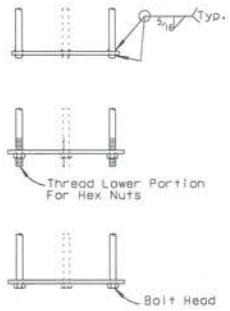

ALTERNATIVE BAR CONNECTIONS

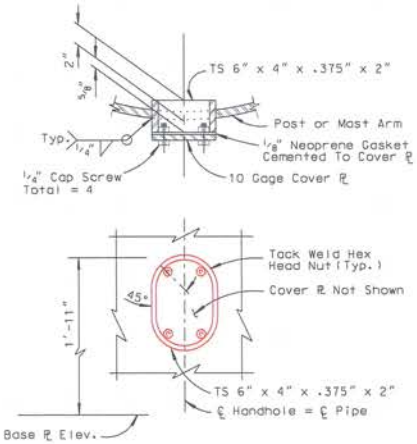

HANDHOLE AND COVER DETAILS

POST SIZE (IN) (LB/FT)	BASE PLATE	ANCHOR BOLTS (Min.)
6 @ 18.97	1'-2"x 1'-2"x 1 1/2"	4-1 1/4"
6 @ 28.57	1'-2"x 1'-2"x 1 1/2"	4-1 1/2"
8 @ 28.55	1'-6"x 1'-6"x 1 1/2"	4-1 3/4"
8 @ 43.39	1'-6"x 1'-6"x 2"	4-2"
10 @ 54.74	1'-8"x 1'-8"x 2"	4-2 1/4"
12 @ 65.42	1'-8"x 1'-8"x 2"	4-2 1/2"
14 @ 72.09	2'-4"x 2'-4"x 2"	6-2"
14 @ 106.13	2'-4"x 2'-4"x 2"	6-2 1/4"

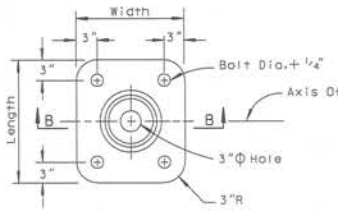

PLAN

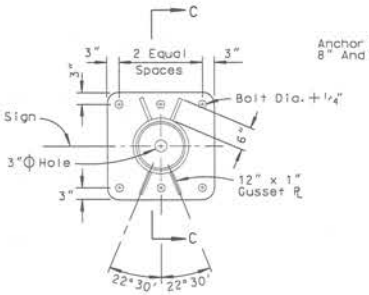

PLAN

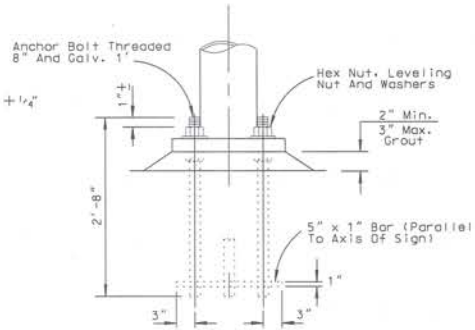

ANCHOR BOLT

SPECIFICATIONS:

DESIGN SPECIFICATIONS: AASHTO STANDARD SPECIFICATIONS FOR STRUCTURAL SUPPORTS FOR HIGHWAYS, SIGNS, LUMINAIRES, AND TRAFFIC SIGNALS, 6TH EDITION, 2013

CONSTRUCTION SPECIFICATIONS: STATE OF NEVADA STANDARD SPECIFICATIONS FOR ROAD AND BRIDGE CONSTRUCTION, CURRENT EDITION AND THE SPECIAL PROVISIONS THERETO.

WELDING: ALL WELDING CONTINUOUS UNLESS OTHERWISE NOTED ON THE PLANS. ALL WELDING TO BE DONE IN ACCORDANCE WITH THE STANDARD SPECIFICATIONS.

GENERAL NOTES:

1. FOOTINGS SHALL BE PLACED WITH LONG DIMENSIONS NORMAL TO AXIS OF SIGN.
2. ON SINGLE POST SIGNS THE POST SHALL BE RAKED OUT OF PLUMB WITH THE USE OF THE LEVELING NUTS TO MAKE THE BOTTOM OF THE SIGN FRAME LEVEL.
3. 2"Φ ANCHOR BOLTS MAY BE SUBSTITUTED FOR 1 3/4"Φ BOLTS. 2 1/2"Φ ANCHOR BOLTS MAY BE SUBSTITUTED FOR 2 1/4"Φ BOLTS.

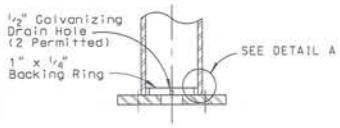

SECTION B-B
6" THRU 12" POST

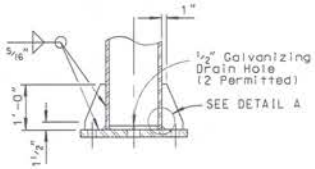

SECTION C-C
14" POST

BASE PLATE DETAILS

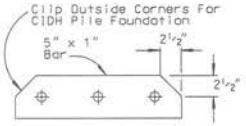

BAR PLAN

ANCHORAGE DETAILS

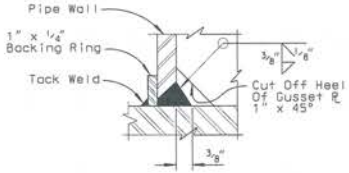

DETAIL A

NEVADA DEPARTMENT OF TRANSPORTATION

OVERHEAD SIGNS LIGHTWEIGHT POST DETAILS

Signed Original On File	T-36.1.16	(627)
CHIEF SAFETY/TRAFFIC ENGR.	ADOPTED 11/95	REVISION 12/14

Standard Plans Change Request

Requests for modifying the Standard Plans for Road and Bridge Construction must be submitted to:

NDOT Specifications Division
Attn: Standards and Manuals Supervisor
1263 South Stewart Street
Carson City, Nevada 89712

Standard Sheet No.: T-36.1.17 Page No.: T-88 Note: A separate form is required for each change.

Description of requested modification or correction: Updated table and details. ..... (Please attach supporting information).

Reason for request: Details have been updated for new design requirements. .....

Requestor Information: Name: Troy Martin Phone: 888-7380

==========

For Standards/Manuals Personnel Only: ☐ Approved ☐ Denied

Revised by: Signature: _____ Date: _____

Policy Review:
☐ CADD Standards ☐ ASTM ☐ AASHTO ☐ Design Manual ☐ Specifications

Reviewed by: Signature: _____ Date: _____

Notes: .....

Post Size (IN) (LB/FT)	PILE FOUNDATION				SPREAD FOOTING				
	Pedestal	Pile Dia.	Fdn. Depth	Reinf. Size	Pedestal	Footing	Reinf. Top	Reinf. Bot.	Reinf. ⌋ Bar
6 @ 18.97		30"	8'	#5	1'-10"x 1'-10"	4'x 6'	#4	#4	#5
6 @ 28.57		30"	9'	#5	1'-10"x 1'-10"	4'x 7'	#4	#4	#5
8 @ 28.55		30"	9'	#6	2'-2"x 2'-2"	5'x 8'	#4	#4	#5
8 @ 43.39		30"	11'	#7	2'-2"x 2'-2"	6'x 9'	#4	#5	#5
10 @ 54.74	2'-10"x 2'-10"	30"	13'	#8	2'-4"x 2'-4"	7'x 10'	#5	#7	#7
12 @ 65.42	2'-10"x 2'-10"	30"	15'	#10	2'-4"x 2'-4"	7'x 12'	#6	#8	#8
14 @ 72.09	3'-4"x 3'-4"	36"	15'	#11	2'-11"x 2'-11"	7'x 13'	#7	#9	#8
14 @ 106.13	3'-4"x 3'-4"	36"	16'	#11	2'-11"x 2'-11"	8'x 14'	#7	#9	#8

NOTES:

1. BACKFILL SHALL BE IN PLACE PRIOR TO ERECTION OF POST.
2. SLOPE PROTECTION REQUIRED WHEN INDICATED ON THE PLANS.
3. PILE PEDESTAL SHALL BE FORMED 6" MINIMUM BELOW GROUND SURFACE, REMAINDER SHALL BE PLACED AGAINST UNDISTURBED MATERIAL.

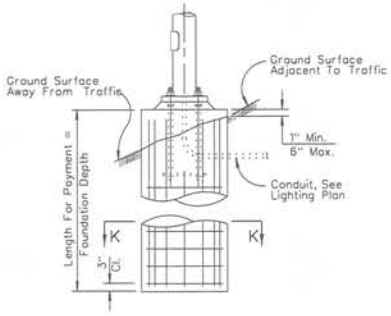

ELEVATION

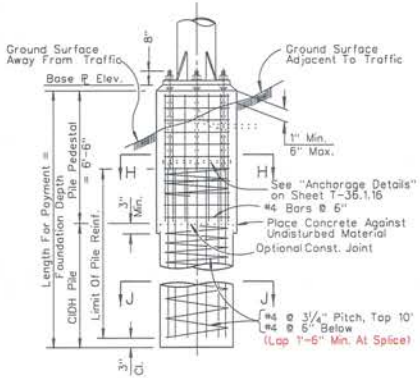

ELEVATION

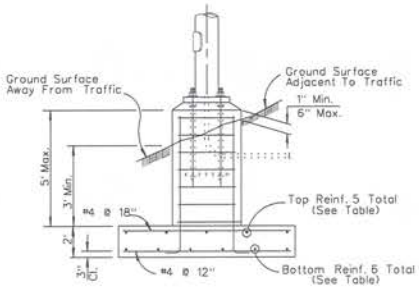

ELEVATION

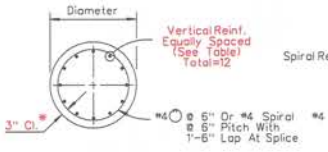

SECTION K-K

6" AND 8" POSTS

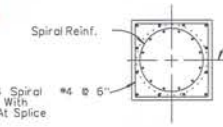

SECTION H-H

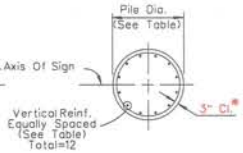

SECTION J-J

10" THRU 14" POSTS

(* 4" CL. For 36" Dia. Pile)

PILE FOUNDATION

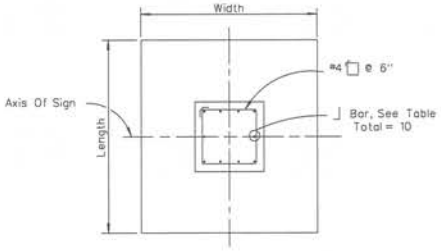

PLAN

SPREAD FOOTING

NEVADA DEPARTMENT OF TRANSPORTATION

OVERHEAD SIGNS
LIGHTWEIGHT
FOUNDATION

Signed Original On File	T-36.1.17	(627)
CHIEF SAFETY/TRAFFIC ENGR.	ADOPTED 11/95	REVISION 12/14

Standard Plans Change Request

Requests for modifying the Standard Plans for Road and Bridge Construction must be submitted to:

NDOT Specifications Division
Attn: Standards and Manuals Supervisor
1263 South Stewart Street
Carson City, Nevada 89712

Standard Sheet No.: T-37.1.1 Page No.: T-89 Note: A separate form is required for each change.

Description of requested modification or correction:

1. BROKEN WHITE LINE (RURAL), Omit the 8" dimension from either end of detail.

.....
.....
(Please attach supporting information).

Reason for request:

1. Broken white line can be 8" for roadways with controlled access or 4" on conventional roadways

.....
.....

Requestor Information: Name: Jeannie Drown Phone: 888-7678

==========

For Standards/Manuals Personnel Only: ☐ Approved ☐ Denied

Revised by: Signature: _____ Date: _____

Policy Review:
☐ CADD Standards ☐ ASTM ☐ AASHTO ☐ Design Manual ☐ Specifications

Reviewed by: Signature: _____ Date: _____

Notes: .....
.....
.....
.....
.....
.....

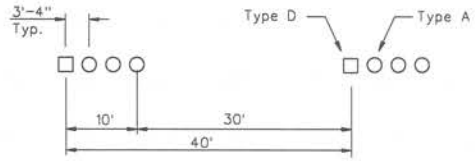

BROKEN YELLOW LINE

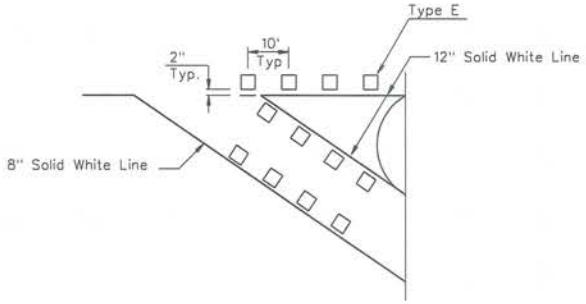

RPMs Run Full Length of Gore

EXIT RAMP (GORE)

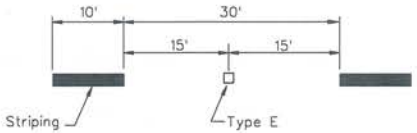

BROKEN WHITE LINE (RURAL)

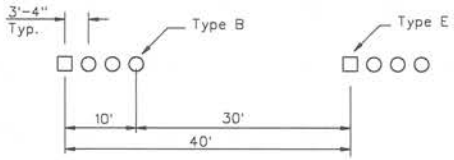

BROKEN WHITE LINE (URBAN)

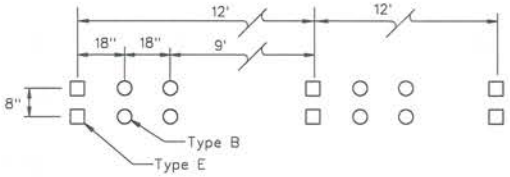

DOTTED WHITE LINE

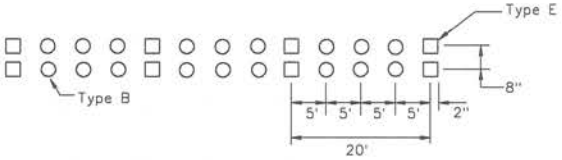

8" SOLID WHITE LINE

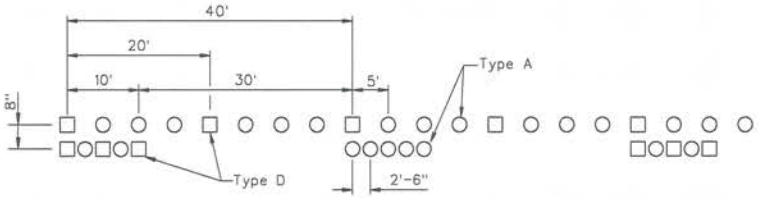

BROKEN YELLOW W/SOLID YELLOW LINE

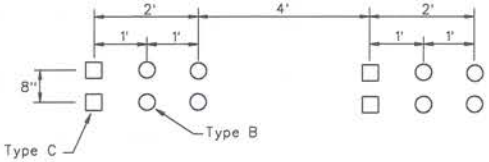

DOTTED WHITE LINE
(CAT TRACKS)

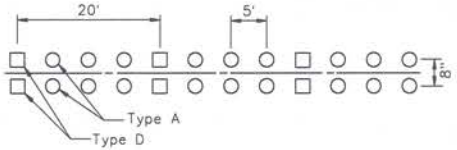

DOUBLE SOLID YELLOW LINE

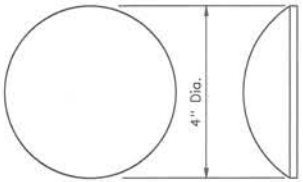

Type A - Non-Reflective Yellow Marker
Type B - Non-Reflective White Marker

NON-REFLECTIVE MARKER

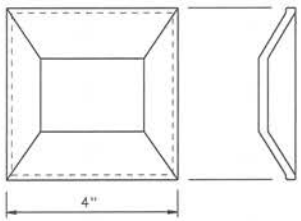

Type C - One Way Clear Reflective Marker
Type D - Two Way Yellow Reflective Marker
Type E - Red/Clear Reflective Marker - Clear Side Shall Face Oncoming Traffic

REFLECTIVE MARKER

STATE OF NEVADA
DEPARTMENT OF TRANSPORTATION

PERMANENT
RAISED PAVEMENT MARKERS

T-37.1.1	(633)	Signed Original On File
ADOPTED 2/79	REVISED 5/09	CHIEF SAFETY/TRAFFIC ENGR.

Standard Plans Change Request

Requests for modifying the Standard Plans for Road and Bridge Construction must be submitted to:

NDOT Specifications Division
Attn: Standards and Manuals Supervisor
1263 South Stewart Street
Carson City, Nevada 89712

Standard Sheet No.: T-37.1.1 Page No.: T-89 Note: A separate form is required for each change.

Description of requested modification or correction: MAKE RPM's RUN the Full Length of exit Ramp. Change to TYPE E on Ramp

(Please attach supporting information).

Reason for request:

Requestor Information: Name: Jeannie Drown Phone: 888-7678

For Standards/Manuals Personnel Only: ☐ Approved ☐ Denied

Revised by: Signature: _____ Date: _____

Policy Review:
☐ CADD Standards ☐ ASTM ☐ AASHTO ☐ Design Manual ☐ Specifications

Reviewed by: Signature: _____ Date: _____

Notes:

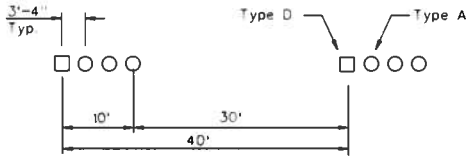

BROKEN YELLOW LINE

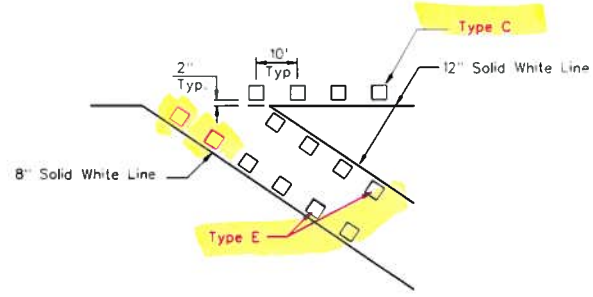

Install RPMs Full Length of Exit Ramp(s)

EXIT RAMP (GORE)

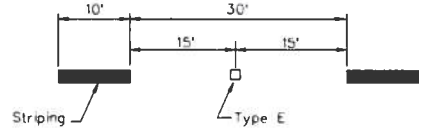

BROKEN WHITE LINE (RURAL)

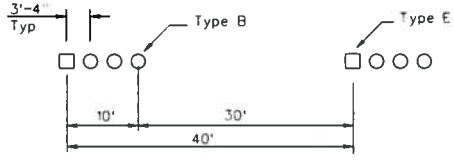

BROKEN WHITE LINE (URBAN)

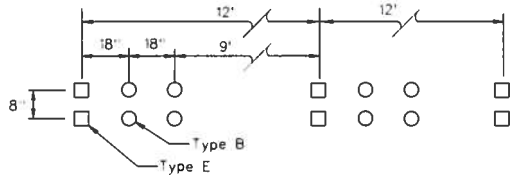

DOTTED WHITE LINE

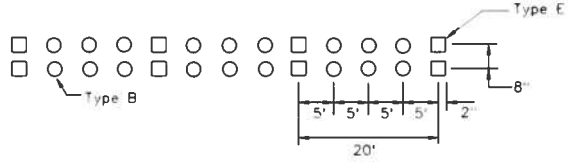

8" SOLID WHITE LINE

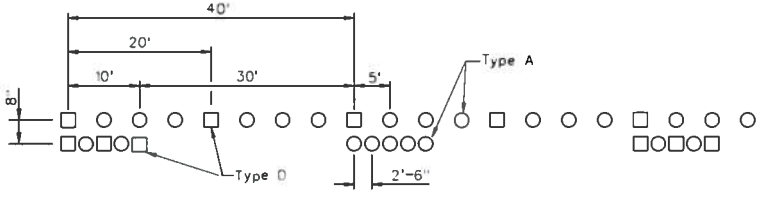

BROKEN YELLOW W/SOLID YELLOW LINE

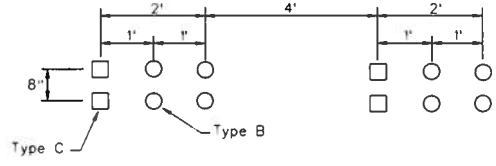

DOTTED WHITE LINE
(CAT TRACKS)

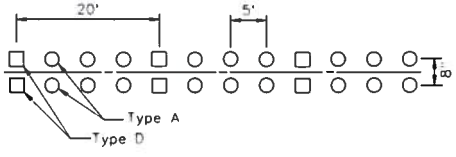

DOUBLE SOLID YELLOW LINE

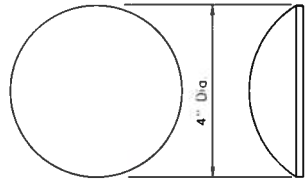

Type A – Non-Reflective Yellow Marker
Type B – Non-Reflective White Marker

NON-REFLECTIVE MARKER

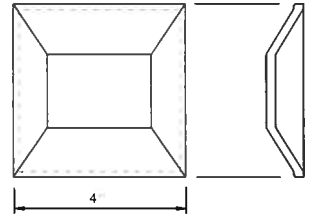

Type C – One Way Clear Reflective Marker
Type D – Two Way Yellow Reflective Marker
Type E – Red/Clear Reflective Marker – Clear Side Shall Face Oncoming Traffic

REFLECTIVE MARKER

STATE OF NEVADA
DEPARTMENT OF TRANSPORTATION

PERMANENT
RAISED PAVEMENT MARKERS

T-37.1.1 (633)		Signed Original On File
ADOPTED 2/79	REVISED 5/09	CHIEF SAFETY/TRAFFIC ENGR.

T-89

Standard Plans Change Request

Requests for modifying the Standard Plans for Road and Bridge Construction must be submitted to:

NDOT Specifications Division
Attn: Standards and Manuals Supervisor
1263 South Stewart Street
Carson City, Nevada 89712

Standard Sheet No.: T-38.1.1 Page No.: T-91 Note: A separate form is required for each change.

Description of requested modification or correction:

1. Replace PLACEMENT OF MERGE ARROWS typical with new typicals depicting the use of 2 Merge Arrows For Typical Lane Reduction & Typical Parallel Acceleration Lane
2. Change HOV LANE Diamond sf^2 from $12ft^2$ to $11.5\ ft^2$

(Please attach supporting information).

Reason for request:

1. New typical has been developed to use two merge arrows
2. HOV LANE Diamond is $11.5\ ft^2$

Requestor Information: Name: Jeannie Drown Phone: 888-7678

For Standards/Manuals Personnel Only: ☐ Approved ☐ Denied

Revised by: Signature: _____ Date: _____

Policy Review:
☐ CADD Standards ☐ ASTM ☐ AASHTO ☐ Design Manual ☐ Specifications

Reviewed by: Signature: _____ Date: _____

Notes:

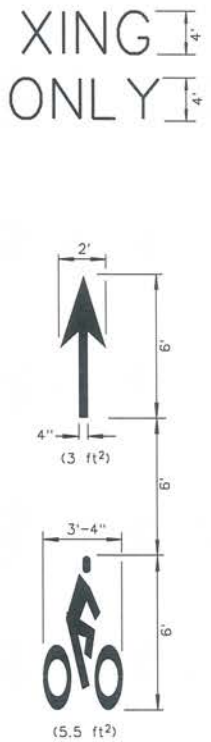

These legends as shown are for bike lane use

BICYCLE

PLACEMENT OF MERGE ARROWS

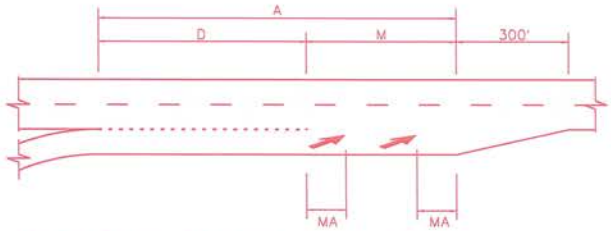

A = ACCELERATION LANE LENGTH
D = DOTTED WHITE LINE LENGTH
M = MERGE LENGTH
MA = MERGE ARROW PLACEMENT

D = ⅔ A
M = A − D
MA = M/4

For Further Details on "PARALLEL ACCELERATION LANE"
See Part III of the MUTCD

TYPICAL
PARALLEL ACCELERATION LANE

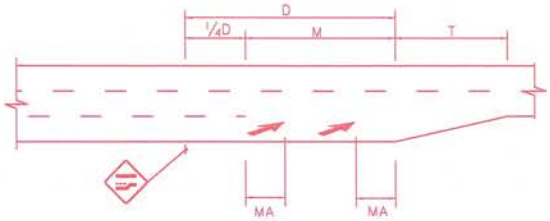

M = MERGE LANGTH
MA = MERGE ARROW PLACEMENT
D = ADVANCE WARNING DISTANCE
(SEE M.U.T.C.D. SECTION 2C.05)
T = TAPER LENGTH

S = POSTED SPEED
W = OFFSET IN FEET
44 MPH OR LESS, T= WS²/60
45 MPH OR GREATER, T= WS

M = ¾ D
MA = D/4

For Further Details on "LANE REDUCTION"
See Part III of the MUTCD

TYPICAL LANE REDUCTION

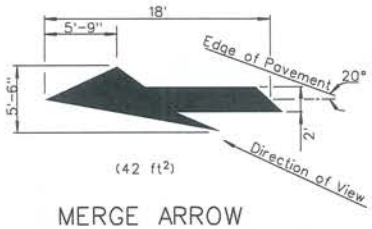

(42 ft²)

MERGE ARROW

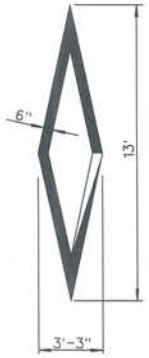

(11.5 ft²)

HOV LANE

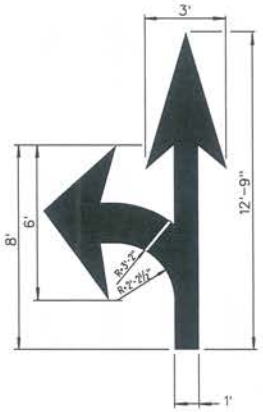

(27 ft²)

LEFT/STRAIGHT ARROW

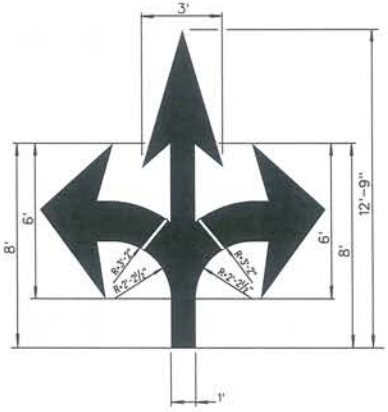

(36 ft²)

LEFT/STRAIGHT/RIGHT ARROW

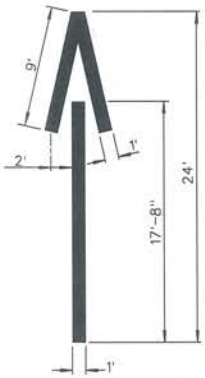

(33 ft²)

WRONG WAY ARROW

(31 ft²)

EXIT ARROW

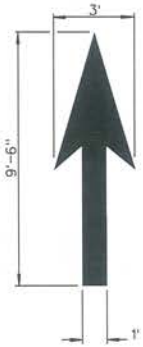

(12.5 ft²)

STRAIGHT ARROW

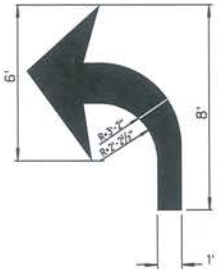

(15.5 ft²)

TURN ARROW

STATE OF NEVADA
DEPARTMENT OF TRANSPORTATION

PERMANENT
PAVEMENT MARKINGS
BICYCLE/HOV/ARROWS

T-38.1.1	(634)	Signed Original On File
ADOPTED 7/96	REVISED 7/02	CHIEF SAFETY/TRAFFIC ENGR.

TYPICAL ACCELERATION LANE MARKINGS

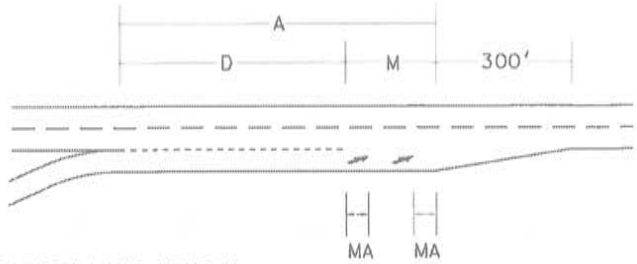

A = ACCELERATION LANE LENGTH
D = DOTTED WHITE LINE LENGTH
M = MERGE LENGTH
MA = MERGE ARROW PLACEMENT

D = 2/3 A
M = A- D
MA = M/4

TYPICAL LANE REDUCTION MARKINGS

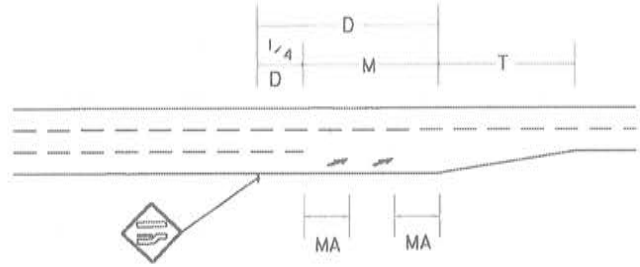

M = MERGE LENGTH
MA = MERGE ARROW PLACEMENT
D = ADVANCE WARNING DISTANCE
(SEE M.U.T.C.D. SECTION 2C.05)
T = TAPER LENGTH
S = POSTED SPEED
W = OFFSET IN FEET
44 MPH AND LESS $T = WS^2/60$
45 MPH AND GREATER USE $T = WS$

$M = 3/4\ D$
$MA = D/4$

Standard Plans Change Request

Requests for modifying the Standard Plans for Road and Bridge Construction must be submitted to:

NDOT Specifications Division
Attn: Standards and Manuals Supervisor
1263 South Stewart Street
Carson City, Nevada 89712

Standard Sheet No.: T-38.15 Page No.: T-95 Note: A separate form is required for each change.

Description of requested modification or correction: In Note 1 it says: The entire median shall be painted from the median nose back 5' or to the first P.C., whichever is greater. We believe it should say: The entire median shall be painted from the median nose back 5' or to the first P.C., or P.T., whichever is greater as shown in PLAN view above.

(Please attach supporting information).

Reason for request: Better clarification.

Requestor Information: Name: Sam Lompa Phone: 888-3020

For Standards/Manuals Personnel Only: ☐ Approved ☐ Denied

Revised by: Signature: _____ Date: _____

Policy Review:
☐ CADD Standards ☐ ASTM ☐ AASHTO ☐ Design Manual ☐ Specifications

Reviewed by: Signature: _____ Date: _____

Notes:

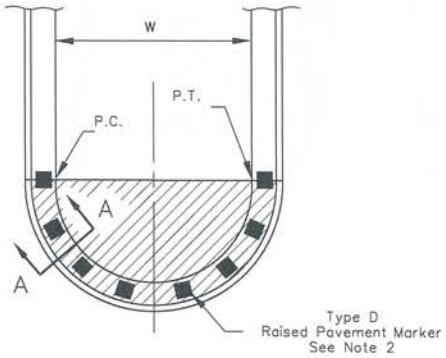

PLAN

NOTES:

1. The entire median shall be painted from the median nose back 5' or to the first P.C., or P.T., which ever is greater.
2. See sheet T-37.1.1 for Type D raised pavement marker.
3. See sheet R-9.2.1 for Type 2 object marker.

LEGEND:

- PERMANENT PAVEMENT STRIPING (VARIES)

SPACING TABLE

"W"	Number of Type D Raised Pavement Markers Per Median Nose *
1' to 2'	3
℄2' to 3'	4
℄3' to 4'	5
℄4'	1 Each For Every 1' of Curb Length

* (1) Raised Pavement Marker Each Shall Be Placed On The P.C. and The P.T. Of The Median Nose; All Others Spaced Equally Between P.T. and P.C.

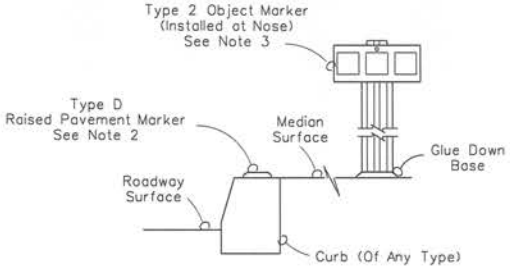

SECTION A-A
SNOW REMOVAL AREA

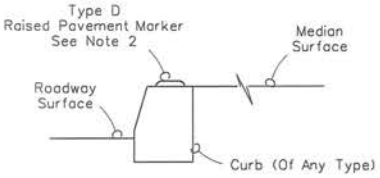

SECTION A-A
NON-SNOW REMOVAL AREA

STATE OF NEVADA
DEPARTMENT OF TRANSPORTATION

MEDIAN NOSE
ISLAND MARKING

T-38.1.5	(632)	Signed Original On File
ADOPTED 11/04	REVISED 9/06	CHIEF SAFETY/TRAFFIC ENGR.

Standard Plans Change Request

Requests for modifying the Standard Plans for Road and Bridge Construction must be submitted to:

NDOT Specifications Division
Attn: Standards and Manuals Supervisor
1263 South Stewart Street
Carson City, Nevada 89712

Standard Sheet No.: T-38.1.5 Page No.: T-95 Note: A separate form is required for each change.

Description of requested modification or correction:

1. Add "SEE NOTE 1" to Plan detail
2. Modify note under Spacing Table: Delete parenthesis around the 1 and delete Each from the first line:
3. Add arrow symbols to descriptions in Section A-A Snow Removal Area & Section A-A Non-Snow Removal Area typicals

.....
.....
.....

(Please attach supporting information).

Reason for request:

1. PLAN section should refer to Note 1
2. Modified verbiage is less confusing: *1 Raised Pavement Marker Shall Be Placed
3. Section A-A Snow Removal & section A-A Non-Snow Removal, the typical drawings are showing lines with what appears to be a node, with no arrow. We request a line with an arrow calling out the description

.....
.....

Requestor Information: Name: Jeannie Drown Phone: 888-7678

==========

For Standards/Manuals Personnel Only: ☐ Approved ☐ Denied

Revised by: Signature: _____ Date: _____

Policy Review:
☐ CADD Standards ☐ ASTM ☐ AASHTO ☐ Design Manual ☐ Specifications

Reviewed by: Signature: _____ Date: _____

Notes: .....
.....

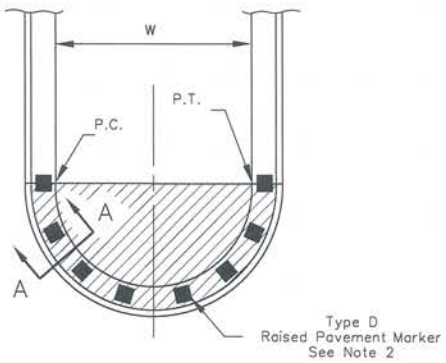

PLAN

See Note 1

NOTES:

1. The entire median shall be painted from the median nose back 5' or to the first P.C., or P.T., which ever is greater.
2. See sheet T-37.1.1 for Type D raised pavement marker.
3. See sheet R-9.2.1 for Type 2 object marker.

LEGEND:

- PERMANENT PAVEMENT STRIPING (VARIES)

SPACING TABLE

"W"	Number of Type D Raised Pavement Markers Per Median Nose *
1' to 2'	3
℄2' to 3'	4
℄3' to 4'	5
℄4'	1 Each For Every 1' of Curb Length

* 1 Raised Pavement Marker Shall Be Placed On The P.C. and The P.T. Of The Median Nose; All Others Spaced Equally Between P.T. and P.C.

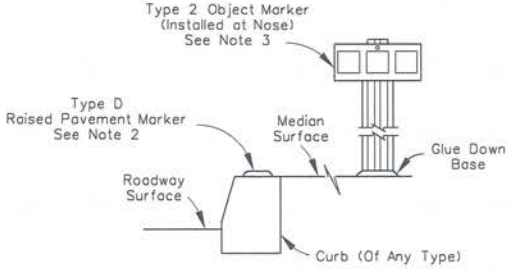

SECTION A-A
SNOW REMOVAL AREA

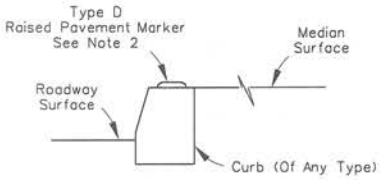

SECTION A-A
NON-SNOW REMOVAL AREA

STATE OF NEVADA
DEPARTMENT OF TRANSPORTATION

MEDIAN NOSE
ISLAND MARKING

T-38.1.5	(632)	Signed Original On File
ADOPTED 11/04	REVISED 9/06	CHIEF SAFETY/TRAFFIC ENGR.

Standard Plans Change Request

Requests for modifying the Standard Plans for Road and Bridge Construction must be submitted to:

NDOT Specifications Division
Attn: Standards and Manuals Supervisor
1263 South Stewart Street
Carson City, Nevada 89712

Standard Sheet No.: T-38.1.7 Page No.: T-97 Note: A separate form is required for each change.

Description of requested modification or correction:

1. Marking and Placement Details: Change square footage of diamonds from $13ft^2$ to $11.5\ ft^2$.

.....
.....
.....

(Please attach supporting information).

Reason for request:

1. Marking and Placement Details should show square footage as $11.5ft^2$.

.....
.....
.....

Requestor Information: Name: Jeannie Drown Phone: 888-7678

==========

For Standards/Manuals Personnel Only: ☐ Approved ☐ Denied

Revised by: Signature: _____ Date: _____

Policy Review:
☐ CADD Standards ☐ ASTM ☐ AASHTO ☐ Design Manual ☐ Specifications

Reviewed by: Signature: _____ Date: _____

Notes: .....
.....
.....

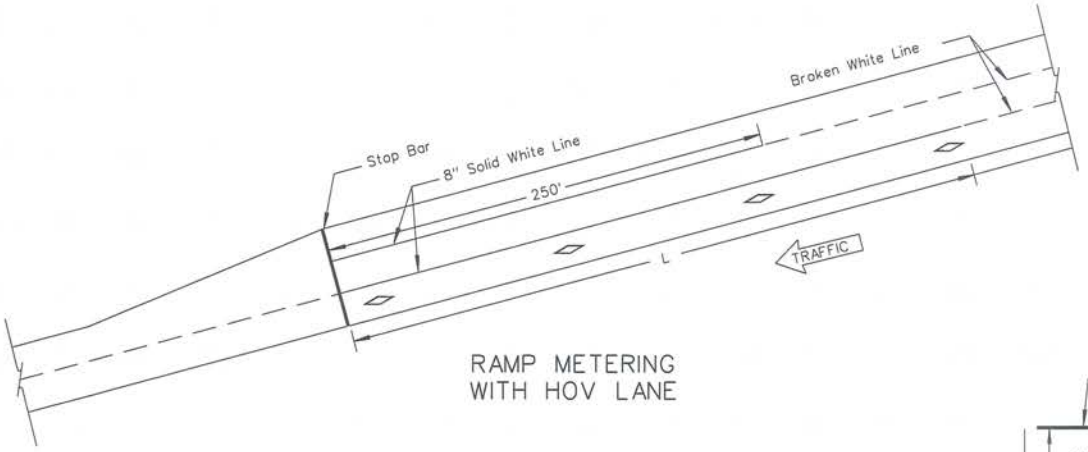

RAMP METERING
WITH HOV LANE

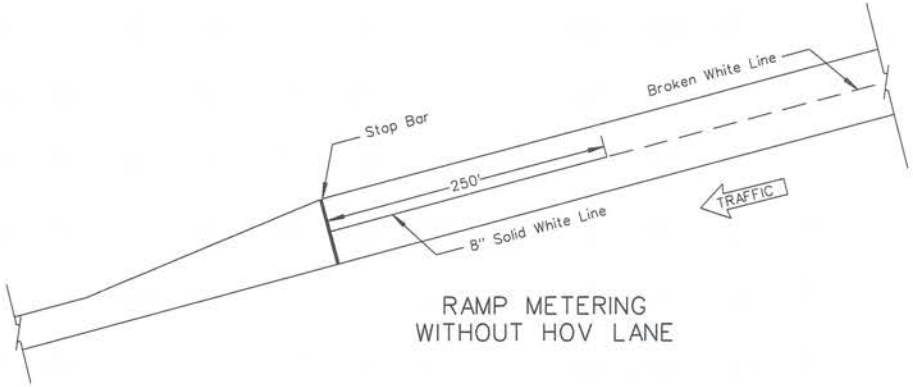

RAMP METERING
WITHOUT HOV LANE

NOTES:

1. The HOV symbol closest to stop bar shall be installed 13' prior to the stop bar.
2. When calculating distance between markings, round to the nearest whole number.
3. When raised pavement markers (RPM) are specified, use RPM stop bar.
4. When a typical lane reduction begins at the stop bar, omit merge arrows and lane ends sign (W4-2). See sheet T-38.1.1
5. For HOV marking details see sheet T-38.1.1

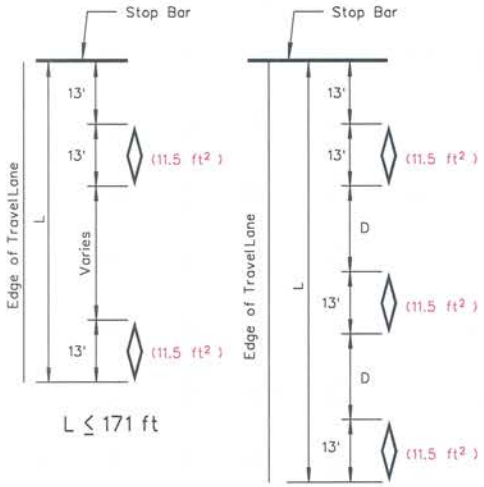

MARKING AND PLACEMENT
DETAILS

Storage Length (Feet)	Number of Markings
L	M
	HOV
172 TO 252	3
253 TO 365	4
366 TO 478	5
479 TO 591	6
592 TO 704	7
705 TO 817	8
818 TO 930	9
931 TO 1043	10
1044 TO 1156	11
1157 TO 1269	12
1270 TO 1382	13
1383 TO 1495	14
1496 TO 1608	15
1609 TO 1721	16
1722 TO 1834	17
1835 TO 1947	18

$$D = \frac{L-[(M+1)\times 13]}{(M-1)}$$

D - Distance between Markings
L - Storage Length as Directed by the Engineer
M - Number of Markings

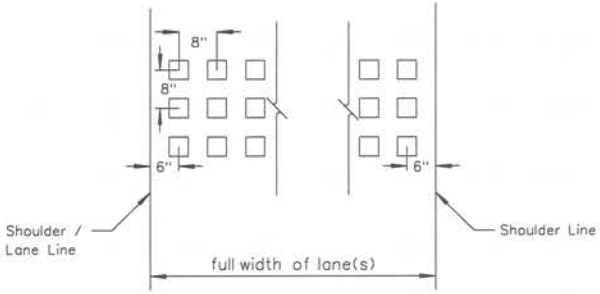

RPM
STOP BAR

☐ - RAISED PAVEMENT MARKER (TYPE C)

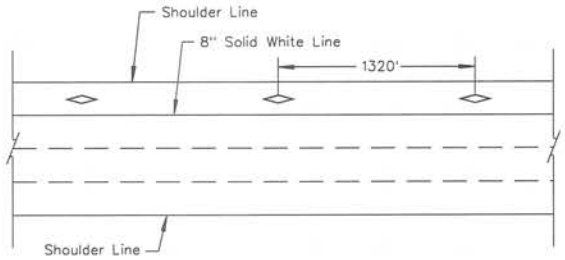

FREEWAY HOV MARKING

STATE OF NEVADA
DEPARTMENT OF TRANSPORTATION

PAVEMENT MARKINGS
RAMP METERING AND HOV

T-38.1.7	(634)	Signed Original On File
ADOPTED 5/09	REVISED	CHIEF TRAFFIC ENGR.

Standard Plans Change Request

Requests for modifying the Standard Plans for Road and Bridge Construction must be submitted to:

NDOT Specifications Division
Attn: Standards and Manuals Supervisor
1263 South Stewart Street
Carson City, Nevada 89712

Standard Sheet No.: M-1.1 thru M-1.10 Page No.: M-1 Note: A separate form is required for each change.

Description of requested modification or correction: CHANGE NUMBERING AND LOCATION TO PAGE NO. T-8c PRIOR TO OVERHEAD SIGNS LIGHTWEIGHT TYPE C CONNECTION DETAILS (ADD M-1 THROUGH M-10)

(Please attach supporting information).

Reason for request: BETTER ORGANIZATION RELATED TO CONTRACTOR CONCERNS

Requestor Information: Name: [illegible] Phone: 7566

For Standards/Manuals Personnel Only: ☐ Approved ☐ Denied

Revised by: Signature: Date:

Policy Review:
☐ CADD Standards ☐ ASTM ☐ AASHTO ☐ Design Manual ☐ Specifications

Reviewed by: Signature: Date:

Notes:

move To T-84 9 Sheets

T-84

M-1

GENERAL NOTES:

UNLESS NOTED OTHERWISE ON THE DRAWINGS, CONSTRUCT THE SIGN STRUCTURE TO CONFORM WITH THE FOLLOWING REQUIREMENTS:

1. CONSTRUCTION SPECIFICATIONS: STATE OF NEVADA STANDARD SPECIFICATIONS FOR ROAD AND BRIDGE CONSTRUCTION, CURRENT EDITION, AND THE SPECIAL PROVISIONS THERETO.

2. DESIGN SPECIFICATIONS: AASHTO STANDARD SPECIFICATIONS FOR STRUCTURAL SUPPORTS FOR HIGHWAY SIGNS, LUMINAIRES, AND TRAFFIC SIGNALS, 4th EDITION, 2001.

3. LOADING

   A. IMPORTANCE FACTORS (I_f & I_p): 1.0

   B. DRAG COEFFICIENT (Cd): 0.45 – 2.0 DEPENDING ON SHAPE OF MEMBER AND WIND VELOCITY

   C. MAXIMUM DEAD LOAD OF DMS: 4000 lb

   D. MAXIMUM WIND LOAD: 23.4 psf * Cd * I_f

   E. LIVE LOAD: 500 lb

   F. NATURAL WIND GUSTS: 5.2 psf * Cd * I_f

   G. GALLOPING: 21.0 psf * I_f

   H. TRUCK GUSTING: 18.8 psf * Cd * I_f

   I. WALKWAY LOAD: DEAD LOAD + 500 lb CONCENTRATED LIVE LOAD

   J. WIND SPEED 90 MPH

   K. ICE LOAD 3 psf

   L. SEISMIC ACCELERATION COEFFICIENT 0.40

   M. SOIL TYPE FOR SEISMIC DESIGN III

4. STRUCTURAL STEEL

   A. STRUCTURAL STEEL PLATES AND SHAPES SHALL CONFORM TO AASHTO M270 GRADE 36 OR ASTM A36.
   B. STEEL PIPE SHALL CONFORM TO ASTM A53, TYPE S, GRADE B.
   C. STEEL TUBING SHALL CONFORM TO ASTM A500, GRADE B.
   D. HOT DIP GALVANIZE STRUCTURAL STEEL AFTER FABRICATION IN ACCORDANCE WITH ASTM A123.

5. UNIT STRESSES

   A. STRUCTURAL STEEL : F_y = 36 ksi

   B. CONCRETE PEDESTAL CLASS A OR AA: F'_c= 4000 psi
      CONCRETE PILE CLASS D OR DA: F'_c = 4000 psi

   C. REINFORCING STEEL : ASTM A615 GRADE 60

6. BOLTED CONNECTIONS.

   A. ACCOMPLISH ALL STRUCTURAL HIGH STRENGTH BOLTING, EXCEPT ANCHOR BOLTS, USING AASHTO M164 BOLTS.
   B. USE A HARDENED FLAT WASHER BETWEEN THE NUT AND THE CONNECTED PART.
   C. USE HIGH STRENGTH BOLTS WITH DTI'S OR TENSION CONTROL INDICATORS INSTALLED PER SUBSECTION 506.03.07 OF THE STANDARD SPECIFICATIONS.
   D. FABRICATE ANCHOR BOLTS FROM MATERIAL CONFORMING TO AASHTO M314 GRADE 36 AND SUPPLEMENTARY REQUIREMENT S1.
   E. HOT-DIP GALVANIZE ALL STEEL PARTS IN ACCORDANCE WITH ASTM A153, EXCEPT AS SHOWN FOR ONLY THE TOP 12" FOR ANCHOR BOLTS, AND AS SPECIFIED FOR HIGH STRENGTH BOLTING.
   F. HIGH STRENGTH BOLTS SHALL BE HOT-DIP GALVANIZED IN ACCORDANCE WITH ASTM A153, CLASS C, OR MECHANICALLY GALVANIZED IN ACCORDANCE WITH ASTM B695, CLASS 50. WASHERS, NUTS, AND BOLTS IN ANY ASSEMBLY SHALL BE GALVANIZED BY THE SAME PROCESS. LUBRICATE THREADS WITH A DYED LUBRICANT.

7. WELDED CONNECTIONS

   A. WELDS SHALL BE CONTINUOUS UNLESS OTHERWISE NOTED ON THE PLANS.
   B. WELD IN ACCORDANCE WITH SECTION 506 OF THE STANDARD SPECIFICATIONS.
   C. USE ONLY WELDERS QUALIFIED ACCORDING TO ANSI/AASHTO/AWS D1.1-2000, SECTION 4 FOR THE TYPE OF JOINT, ELECTRODE, POSITION OF THE JOINT, AND THE MATERIAL THICKNESS.
   D. USE ONLY PREQUALIFIED JOINTS.
   E. TEST ALL FULL PENETRATION GROOVE WELDS ULTRASONICALLY IN ACCORDANCE WITH SECTION 6, PART F OF ANSI/AASHTO/AWS D1.1-2000. ACCEPT OR REJECT EACH WELD DISCONTINUITY ON THE BASIS OF ITS INDICATION RATING AND ITS LENGTH IN ACCORDANCE WITH SECTION 9.3.
   F. HAVE ALL FILLET WELDS VISUALLY INSPECTED BY QUALIFIED PERSONNEL. ANY WELDS FOUND TO HAVE INCOMPLETE FUSION, OVERLAP OR CRACKS WILL BE REJECTED.

8. GROUTING

   A. SHIM BASE PLATES TO FINISH ELEVATION AND COMPLETELY FILL PLATE AREA WITH A HIGH STRENGTH, NON-FERROUS, NON-SHRINK GROUT.
   B. FORMULATE GROUT TO COMPLY WITH THE ASTM C1107.
   C. TAPER ALL FINISHED SURFACES AT 45 DEGREE +/-.

9. REFER TO NDOT STANDARDS SPECIFICATIONS SECTIONS 502, 505, 506 AND 509 FOR ADDITIONAL INFORMATION.

10. MINIMUM VERTICAL ROADWAY CLEARANCE IS 18 FEET TO THE BOTTOM OF THE STRUCTURAL FRAME AND WALKWAY BRACKETS.

11. CONSTRUCT SIGN STRUCTURES TRUE TO DIMENSIONS, FREE FROM KINKS, TWISTS OR BENDS, AND UNIFORM IN APPEARANCE. ASSEMBLE THE COMPLETED SECTIONS IN THE SHOP AND CHECK FOR STRAIGHTNESS, ALIGNMENT, AND DIMENSION. CORRECT ANY VARIATIONS AS APPROVED.

12. AFFIX CLIPS, EYES, OR REMOVABLE BRACKETS TO ALL POSTS AND TRUSSES, AS NECESSARY, TO SECURE THE SIGN DURING SHIPPING AND FOR LIFTING AND MOVING DURING ERECTION. THIS IS TO PREVENT DAMAGE TO THE FINISHED GALVANIZED OR PAINTED SURFACES. REMOVE BRACKETS ON TUBULAR SIGN STRUCTURES AFTER ERECTION. SHOW DETAILS OF SUCH DEVICES ON THE SHOP DRAWINGS.

13. ALL DETAILS OF THE SINGLE-POST CANTILEVER SIGN SHALL BE AS CALLED FOR IN SHEETS T-39.1.2 THRU T39.1.9.

14. FABRICATE ALL SIGN STRUCTURES INTO THE LARGEST PRACTICAL SECTIONS PRIOR TO GALVANIZING.

15. GROUND ALL STRUCTURES IN ACCORDANCE WITH APPLICABLE ELECTRICAL CODES.

16. NPS = NOMINAL PIPE SIZE.

17. 30 DAYS PRIOR TO FABRICATION, SUBMIT TO NDOT (6)SIX SETS OF SHOP DRAWINGS, WHICH MUST COMPLY WITH THE REQUIREMENTS OF SUB SECTION 105.02 OF THE STANDARD SPECIFICATIONS.

18. PROVIDE A SUPPLIER DESIGNED CONNECTION FOR THE DMS SIGN TO THE OVERHEAD SIGN STRUCTURE. THE DESIGN, INCLUDING MATERIAL SPECIFICATIONS IS TO BE STAMPED BY A NEVADA REGISTERED PROFESSIONAL CIVIL OR STRUCTURAL ENGINEER.

NEVADA DEPARTMENT OF TRANSPORTATION

SINGLE POST DMS
OVERHEAD SIGN
GENERAL NOTES

Signed Original On File	M-1.1	(623)
CHIEF BRIDGE ENGINEER	ADOPTED 12/06	REVISION

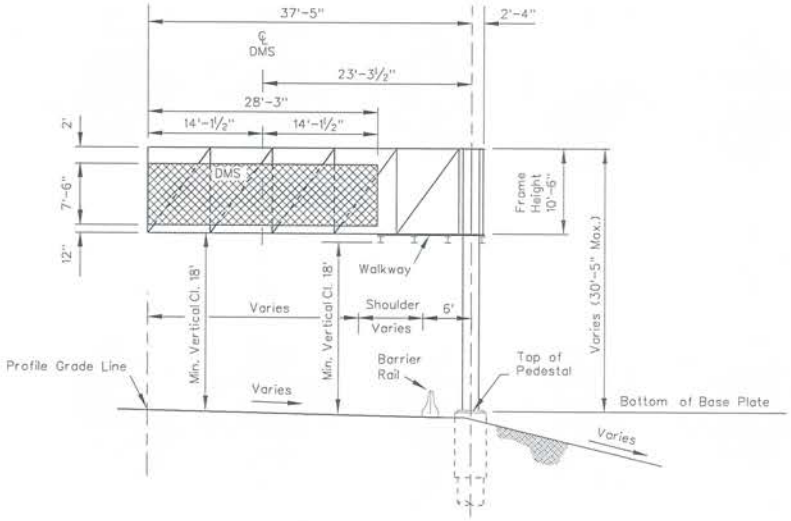

ELEVATION
Barrier Rail Shown

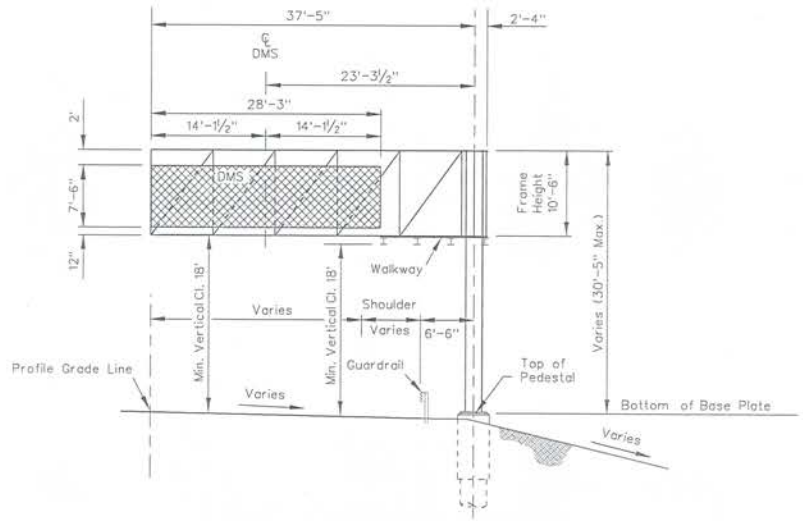

ELEVATION
Guardrail Shown

NOTES:

1. FIELD VERIFY ELEVATIONS AND CONTROLLING DIMENSIONS PRIOR TO ORDERING OR FABRICATING ANY MATERIALS.
2. VERIFY ALL POST HEIGHTS AND SPAN LENGTHS PRIOR TO ORDERING THE FABRICATION OF POSTS AND TRUSS ASSEMBLIES.
3. SEE VENDOR REQUIREMENTS FOR DMS MOUNTING BRACKET DETAILS. CONTRACTOR IS RESPONSIBLE FOR FABRICATION AND INSTALLATION OF DMS ATTACHMENT VERTICAL SUPPORTS.
4. PLACE TOP OF PEDESTAL ELEVATION BETWEEN 2½" AND 4" BELOW BOTTOM OF BASE PLATE ELEVATION. SEE SHEET T-39.1.9 FOR FOUNDATION DETAILS.
5. INSTALL FOUNDATION CAP MAINTENANCE PAD FOR 3:1 SLOPE OR STEEPER. SEE SHEET T-39.1.10 FOR DETAILS.

NEVADA DEPARTMENT OF TRANSPORTATION

SINGLE POST DMS
OVERHEAD SIGN
ELEVATION

Signed Original On File	M-1.2	(623)
CHIEF BRIDGE ENGINEER	ADOPTED 12/06	REVISION

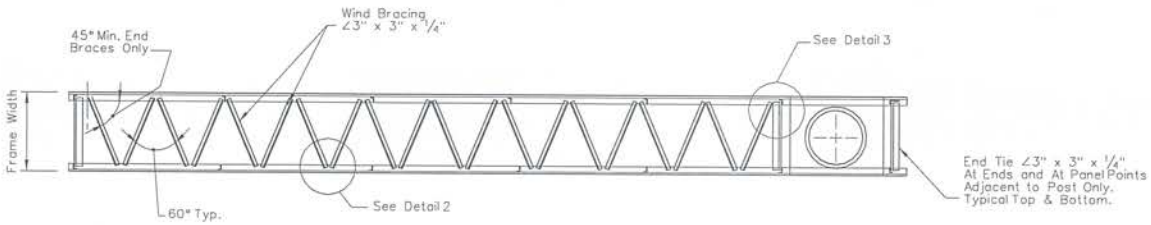

SECTION A-A

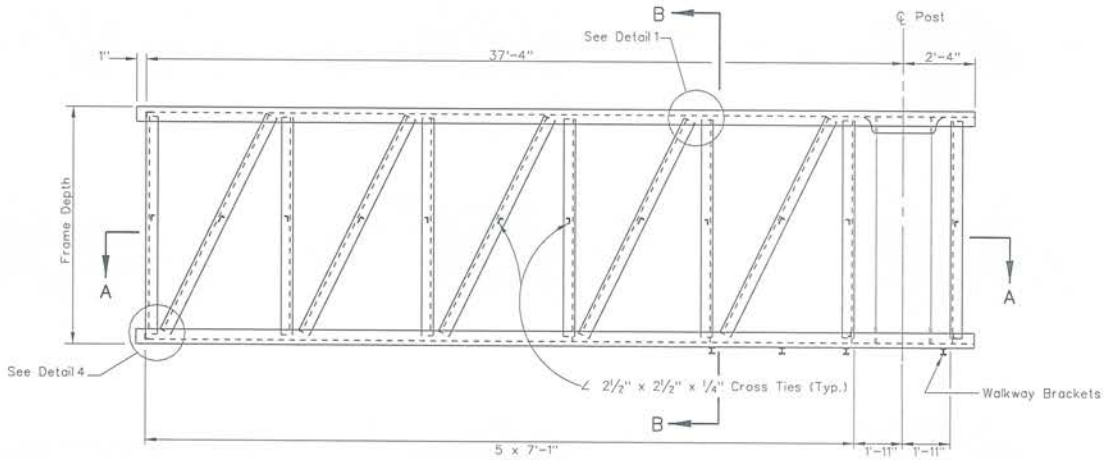

ELEVATION

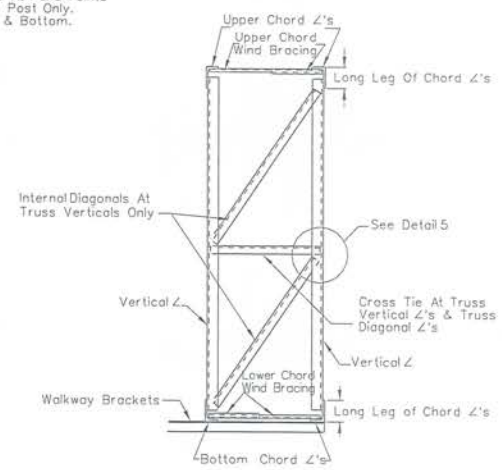

TYPICAL SECTION B-B
INTERNAL BAY

Diagonal ∠'s in Plane of Truss, Not Shown.
Bracing Shown is at All Vertical ∠'s of Truss.
Cross Ties for Diagonals Require Same Weld
as Cross Ties at Verticals.

TABLE 1

SPAN (ft)	Frame Width (ft)	Frame Depth (ft)	CHORD ∠'s	VERTICAL ∠'s	DIAGONAL ∠'s	DIAGONAL WIND BRACING ∠'s	INT. BAY DIAG. BRACING	INT. BAY CROSS TIE
39'-9"	3'-9"	10'-6"	8" x 6" x 3/4"	4" x 4" x 5/16"	4" x 4" x 5/16"	3" x 3" x 1/4"	3" x 3" x 1/4"	2 1/2" x 2 1/2" x 1/4"

NOTES:

1. FOR DETAILS 1 THRU 5 SEE T-39.1.4.
2. FOR CONNECTION OF FRAME TO POST SEE FRAME JUNCTURE DETAILS ON SHEET T-39.1.6.
3. FOR WALKWAY DETAILS SEE T-39.1.8.

NEVADA DEPARTMENT OF TRANSPORTATION

SINGLE POST DMS
OVERHEAD SIGN
STRUCTURAL FRAME
MEMBERS

Signed Original On File	M-1.3	(623)
CHIEF BRIDGE ENGINEER	ADOPTED 12/06	REVISION

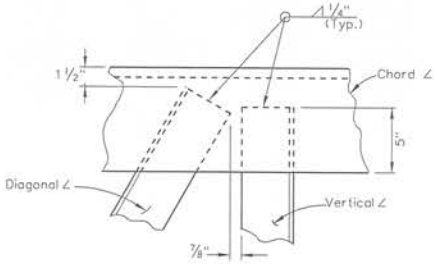

DETAIL 1

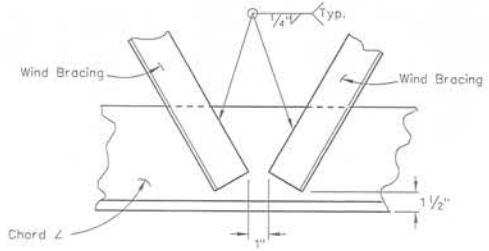

DETAIL 2

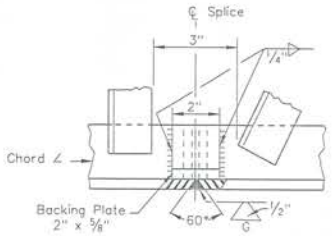

WELDED CHORD SPLICE

Prepare Edges By Beveling To Angle Shown. Weld To 100% Full Penetration & Grind Flush With Base Metal.

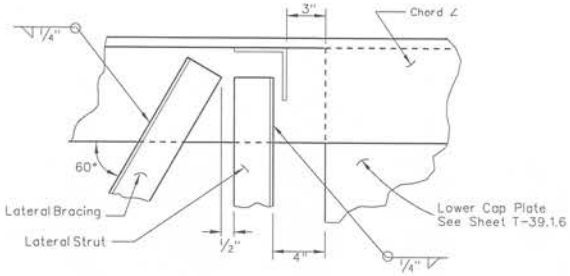

DETAIL 3

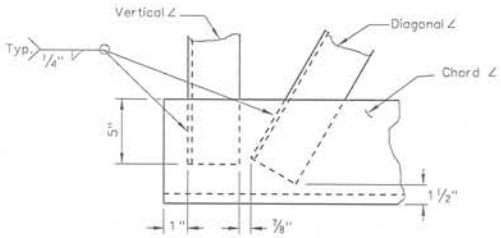

DETAIL 4

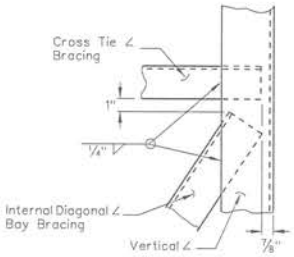

DETAIL 5

NEVADA DEPARTMENT OF TRANSPORTATION

SINGLE POST DMS
OVERHEAD SIGN
STRUCTURAL FRAME
DETAILS

Signed Original On File	M-1.4	(623)
CHIEF BRIDGE ENGINEER	ADOPTED 12/06	REVISION

NOTES:

1. FOR GENERAL NOTES SEE "INSTRUCTIONS AND EXAMPLES" STANDARD PLAN T-36.1.1.
2. SET BASE PLATES AND LONGER SIDE OF PEDESTALS NORMAL TO AXIS OF SIGN.
3. PLACE BACKFILL IN PLACE PRIOR TO ERECTION OF POST.
4. THREAD UPPER 8" OF ANCHOR BOLTS AND GALVANIZE UPPER 12".
5. FOR REINFORCEMENT, EMBEDMENT IS CLEAR TO OUTSIDE OF BAR AND IS 2" TO THE MAIN REINFORCEMENT, EXCEPT AS NOTED.
6. RETAIN ANCHOR PLATES WITH HEX NUT OR FORMED HEAD.
7. RAKE THE POST OUT OF PLUMB, WITH THE USE OF THE LEVELING NUTS TO MAKE THE BOTTOM OF THE SIGN FRAME LEVEL.
8. AT FINAL POSITION OF POST TIGHTEN ALL TOP AND BOTTOM NUTS AGAINST BASE PLATE.

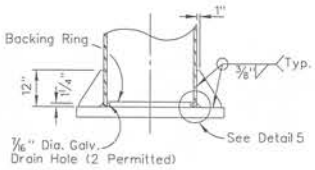

SECTION C-C

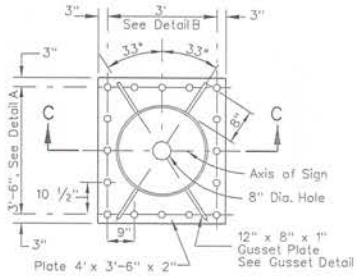

BASE PLATE

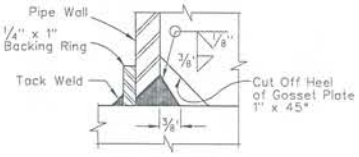

DETAIL 5

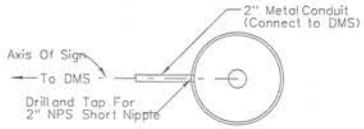

SECTION D-D

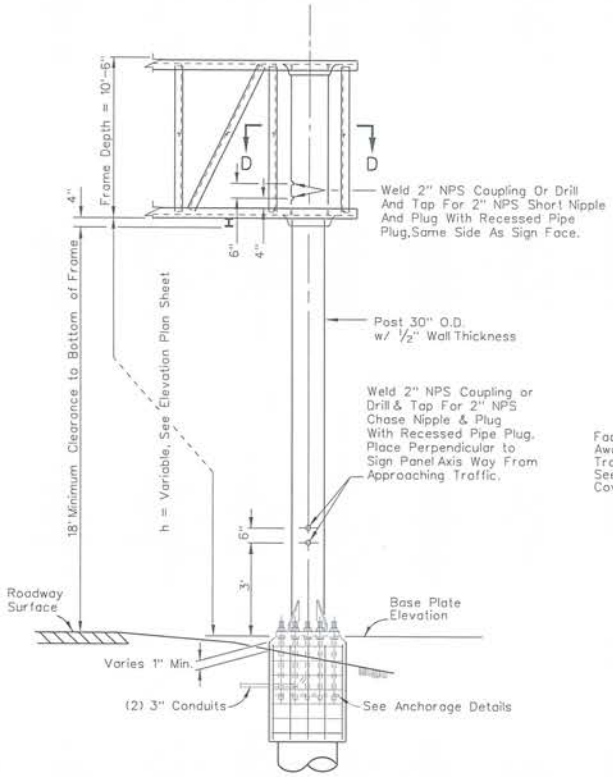

ELEVATION

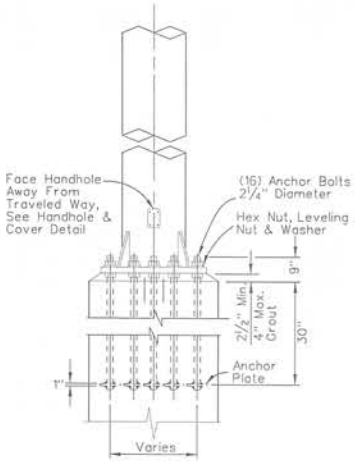

ANCHORAGE DETAILS

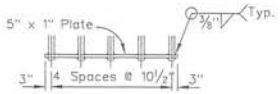

DETAIL A
Anchor Type

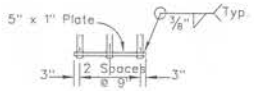

DETAIL B
Anchor Type

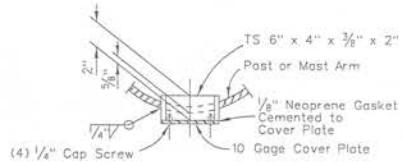

PLAN

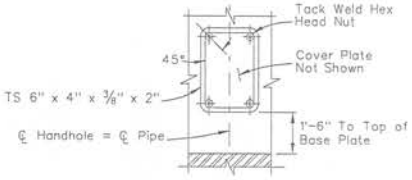

ELEVATION

HANDHOLE & COVER DETAIL

NEVADA DEPARTMENT OF TRANSPORTATION

SINGLE POST DMS OVERHEAD SIGN POST DETAILS

Signed Original On File	M-1.5	(623)
CHIEF BRIDGE ENGINEER	ADOPTED 12/06	REVISION

NOTES:

1. WHEN DRILLING HOLES FOR UNFINISHED BOLTS, DO NOT EXCEED NOMINAL BOLT DIAMETER BY MORE THAN 1/16".
2. USE ONLY GALVANIZED BOLTS, NUTS, AND WASHERS.
3. IN ALL CASES, SUPPORT SIGN FRAME AT TOP OF POST. FINISH THE BEARING SURFACE TRUE AT THE TOP OF THE POST.
4. AT LOWER JUNCTURE CONNECTION, USE SHIMS WHERE ANY CLEARANCE EXISTS BETWEEN BOTTOM OF FRAME AND POST PLATE PRIOR TO TIGHTENING OF BOLTS IN LOWER CONNECTION. SHIMS MAY BE GALVANIZED STEEL CUT WASHERS.

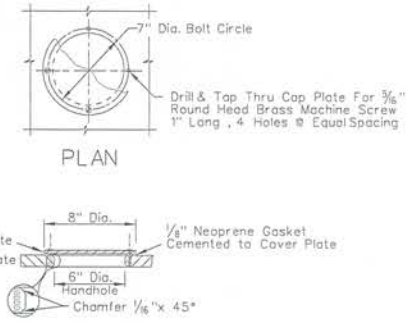

BOLT ACCESS HOLE DETAIL

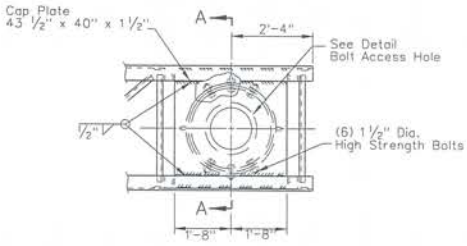

PLAN

Drill Thru Outer Collar and Post Wall For Bolts. Provide Hardened Contoured Washers Under Bolt Head and Nut. Hardened Contoured Washers To Be 3" x 3" x 5/16" Min. Grind Face to Fit.

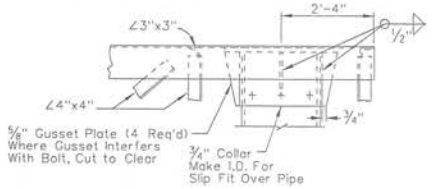

ELEVATION

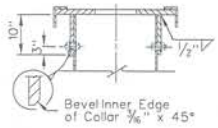

SECTION A–A

UPPER JUNCTURE CONNECTION

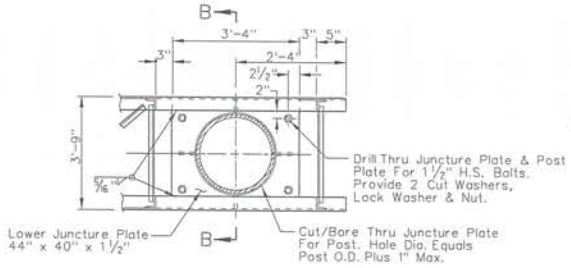

PLAN

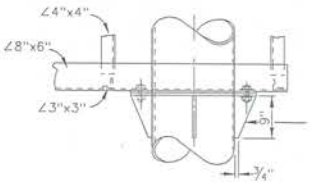

ELEVATION

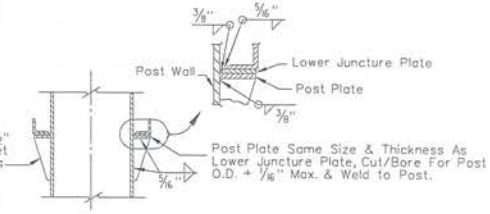

SECTION B–B

LOWER JUNCTURE CONNECTION

NEVADA DEPARTMENT OF TRANSPORTATION

SINGLE POST DMS OVERHEAD SIGN FRAME JUNCTURE DETAILS

Signed Original On File	M-1.6	(623)
CHIEF BRIDGE ENGINEER	ADOPTED 12/06	REVISION

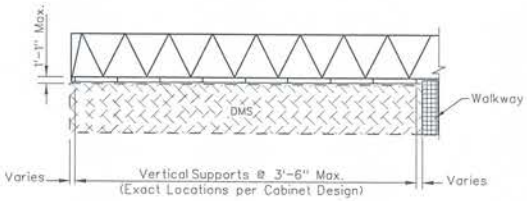

PLAN VIEW

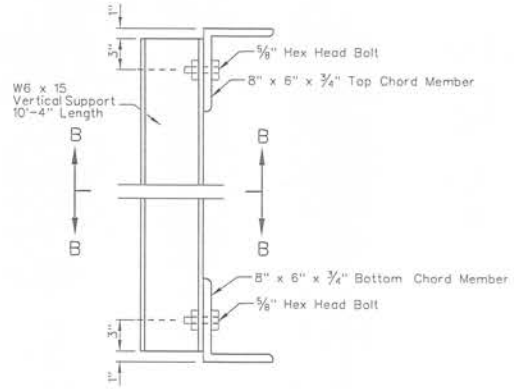

DETAIL A

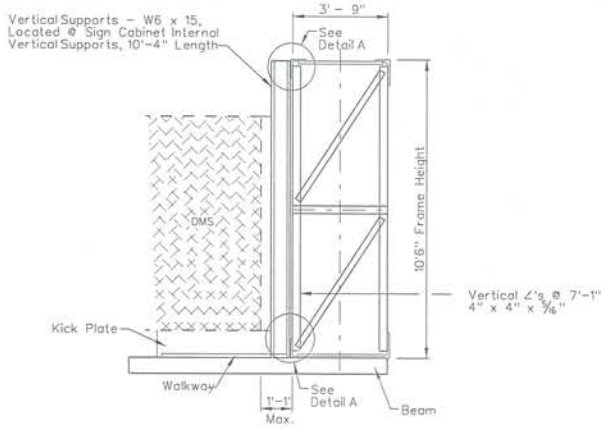

SECTION A-A

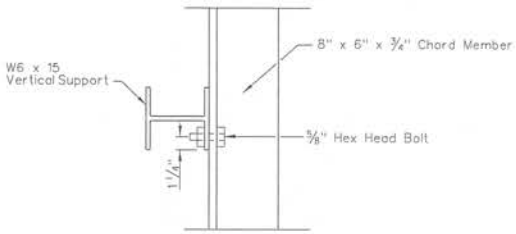

SECTION B-B

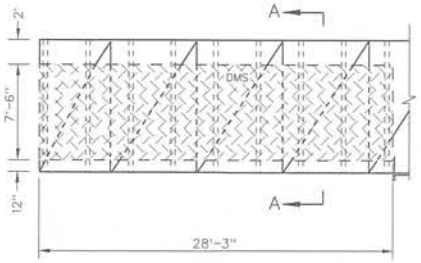

ELEVATION

NEVADA DEPARTMENT OF TRANSPORTATION

SINGLE POST DMS
OVERHEAD SIGN
SUPPORT DETAILS

Signed Original On File	M-1.7	(623)
CHIEF BRIDGE ENGINEER	ADOPTED 12/06	REVISION

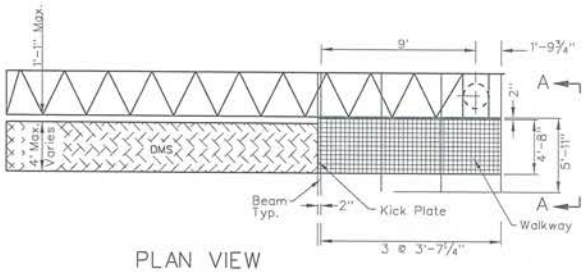

PLAN VIEW

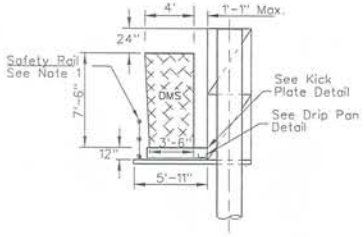

VIEW A-A

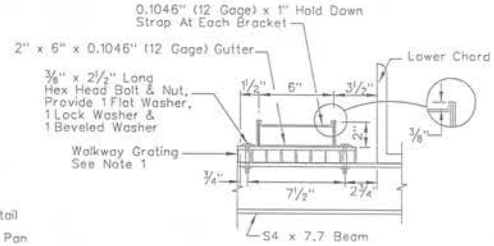

DRIP PAN DETAIL

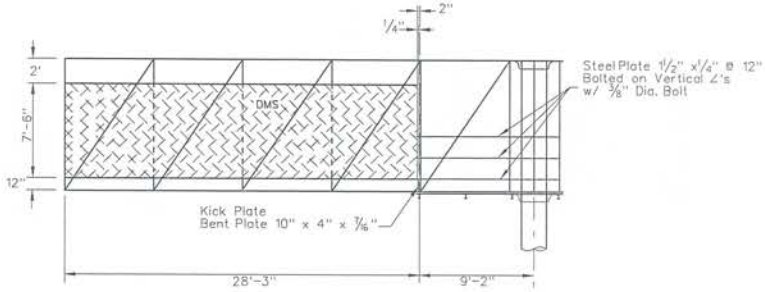

FRONT ELEVATION

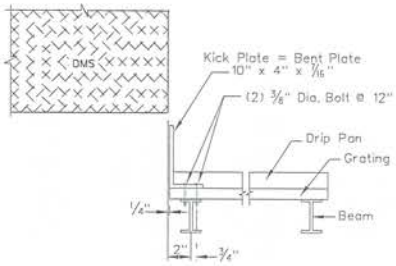

KICK PLATE DETAIL

NOTES:

1. UNLESS OTHERWISE NOTED HEREIN, REFER TO T-36.1.9 AND T-36.1.11 FOR WALKWAY DRIP PAN AND SAFETY RAIL DETAILS.
2. FIELD VERIFY ELEVATIONS PRIOR TO FABRICATION.
3. VERIFY WALKWAY LAYOUT BEFORE FABRICATION.
4. COORDINATE THE CONNECTION OF THE DMS TO THE TRUSS WITH THE DMS FABRICATOR.

NEVADA DEPARTMENT OF TRANSPORTATION

SINGLE POST DMS
OVERHEAD SIGN
CATWALK LAYOUT

Signed Original On File	M-1.8	(623)
CHIEF BRIDGE ENGINEER	ADOPTED 12/06	REVISION

M-8

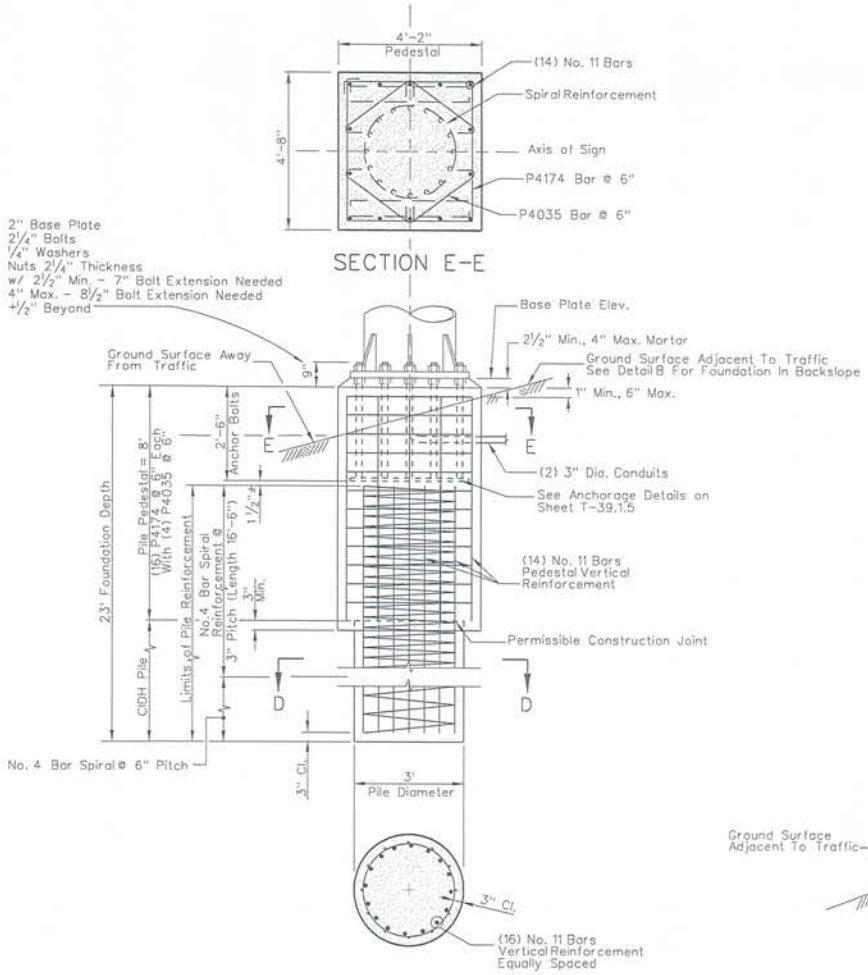

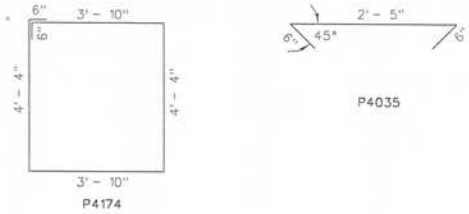

DMS PEDESTAL BENT BARS

NOTES:

1. FOR ANCHOR BOLT LAYOUT, SEE SHEET T-39.1.5.
2. FOR TOP OF BASE PLATE ELEVATION, SEE SHEET T-39.1.2.
3. USE CLASS A OR AA CONCRETE (F'c = 4000 psi).
4. LONGER SIDE OF BASE PLATES, PEDESTALS AND FOOTINGS SHALL BE ORIENTED PERPENDICULAR TO THE SIGN AXIS.
5. PLACE BACKFILL EQUIVALENT TO THE SURROUNDING MATERIAL PRIOR TO ERECTION OF THE POST.
6. FORM PEDESTAL 6" MINIMUM BELOW GROUND SURFACE.

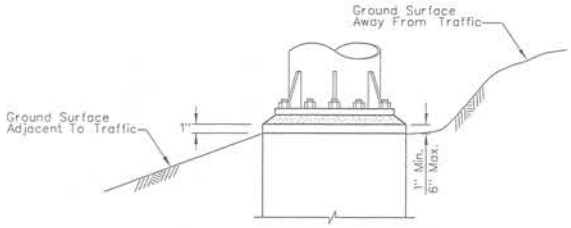

DETAIL B

NEVADA DEPARTMENT OF TRANSPORTATION

SINGLE POST DMS OVERHEAD SIGN FOUNDATION DETAILS

Signed Original On File	M-1.9	(623)
CHIEF BRIDGE ENGINEER	ADOPTED 12/06	REVISION

NOTES:

1. REFER TO DMS ELEVATION SHEETS FOR INSTALLATION LOCATIONS.
2. FOR PILE PEDESTAL AND PILE DETAILS, SEE SHEET T-39.1.9.
3. FOR POST AND BASE PLATE DETAILS, SEE SHEET T-39.1.5.
4. FOR DMS CONTROL CABINET INSTALLATION DETAILS, SEE SHEET VENDOR REQUIREMENTS.
5. INSTALL RAILING PER "PEDESTRIAN RAIL TYPE "R" (MODIFIED)" DETAILS ON SHEET T-39.1.11.
6. INSTALL A FOUNDATION CAP MAINTENANCE PAD AT ALL LOCATIONS WHERE A DMS CONTROL CABINET IS ABOVE A 3:1 OR STEEPER SLOPE. INSTALL A 48" x 48" x 4" CONCRETE PAD IN FRONT OF DMS CONTROL CABINET ON SLOPES FLATTER THAN 3:1. PAD SHALL SLOPE 2% IN DIRECTION OF EXISTING DRAINAGE.

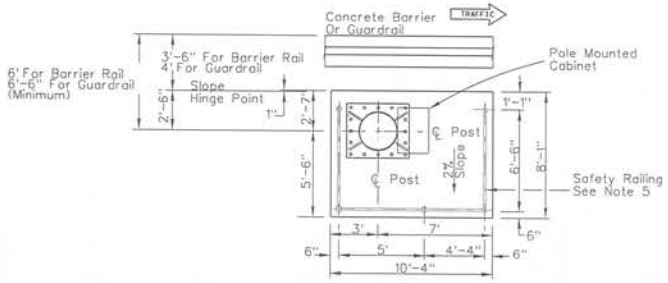

PLAN

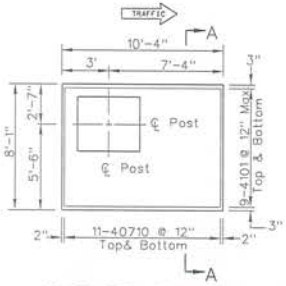

PAD REINFORCING

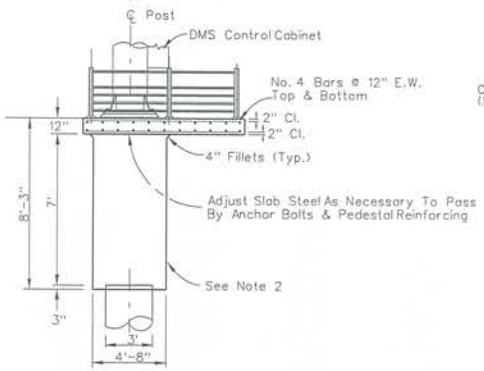

ELEVATION

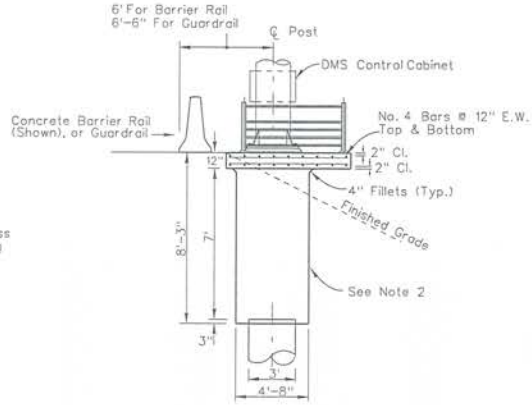

SECTION A-A
ELEVATION

NEVADA DEPARTMENT OF TRANSPORTATION

DMS MAINTENANCE PAD

Signed Original On File	M-1.10	(623)
CHIEF BRIDGE ENGINEER	ADOPTED 12/06	REVISION X/XX

Standard Plans Change Request

Requests for modifying the Standard Plans for Road and Bridge Construction must be submitted to:

NDOT Specifications Division
Attn: Standards and Manuals Supervisor
1263 South Stewart Street
Carson City, Nevada 89712

Standard Sheet No.: M-1.11 - M-1.12 Page No.: M-11- M-12 Note: A separate form is required for each change.

Description of requested modification or correction: MOVE STANDARD DETAIL TO T SHEETS RIGHT AFTER T-30.15 AND CHANGE NUMBERING TO "T" SHEETS INCLUDE DETAILS FROM ITS PROJECT AND INCLUDE ATTACHED CABINET SHEETS (SEE ATTACHED) (Please attach supporting information).

Reason for request: BETTER ORGANIZATION RELATED TO CONTRACTOR CONCERNS AND CLARIFICATION ON ITS CABINETS

Requestor Information: Name: Thomas J. Mace Phone: 7566

For Standards/Manuals Personnel Only: ☐ Approved ☐ Denied

Revised by: Signature: _____ Date: _____

Policy Review:
☐ CADD Standards ☐ ASTM ☐ AASHTO ☐ Design Manual ☐ Specifications

Reviewed by: Signature: _____ Date: _____

Notes:

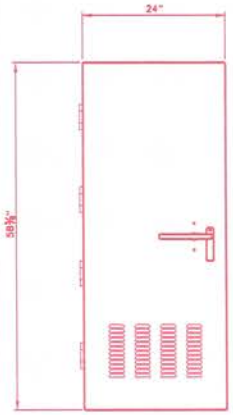

FRONT AND BACK DOOR
FRONT VIEW

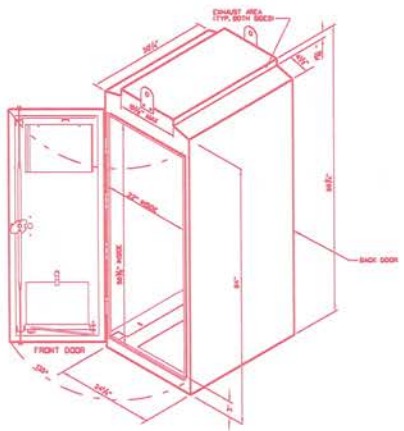

ISOMETRIC VIEW

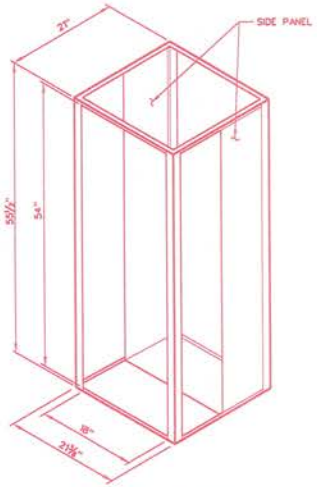

EQUIPMENT RACK
ISOMETRIC VIEW

NOTES:

1. CONCRETE SHALL BE CLASS A OR AA.
2. ROUGH BROOM TEXTURE ON FRONT AND REAR PADS.
3. INSTALL GROUND ROD WIRE CONDUIT IN ALL CABINET FOUNDATIONS. GROUND ROD WIRE CONDUIT TO BE USED WHEN AN ADDITIONAL GROUND ROD IS REQUIRED.
4. SEE PLANS FOR CABINET IDENTIFICATION CODE AND CABINET IDENTIFICATION CODE DETAILS.

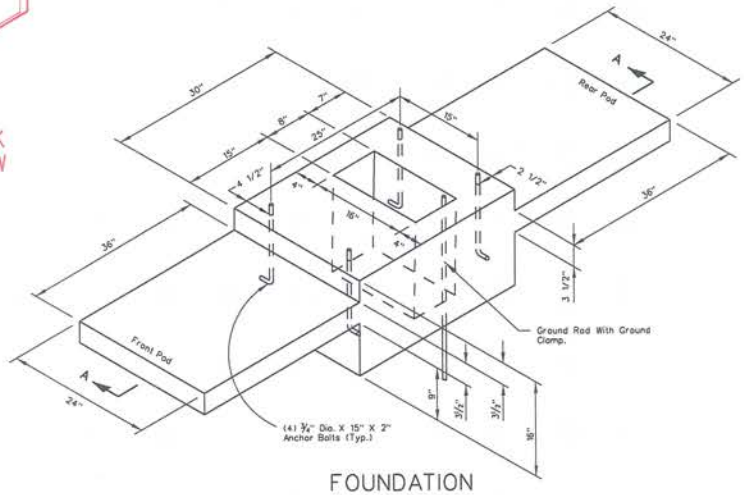

FOUNDATION

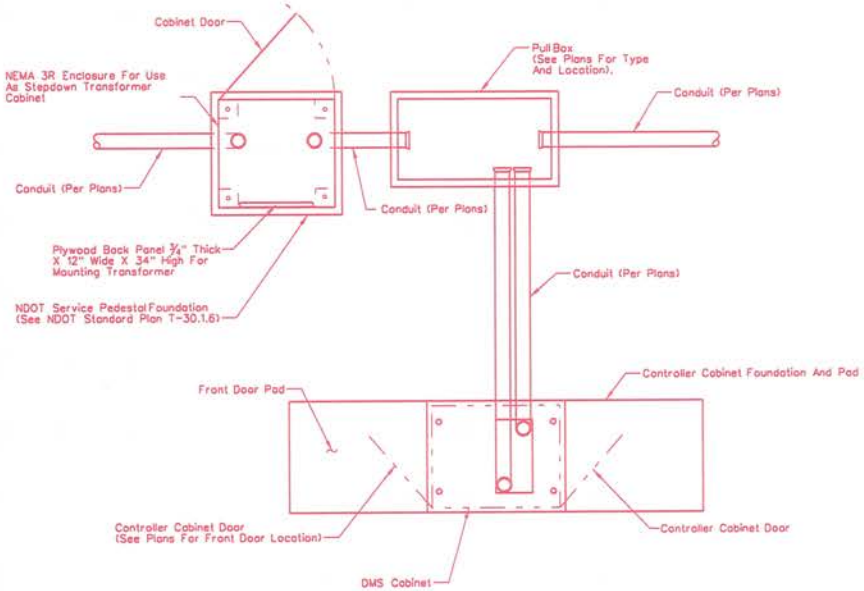

TYPICAL CONDUIT CONFIGURATION DETAIL
FOR TRANSFORMER CABINET INSTALLATION
NTS

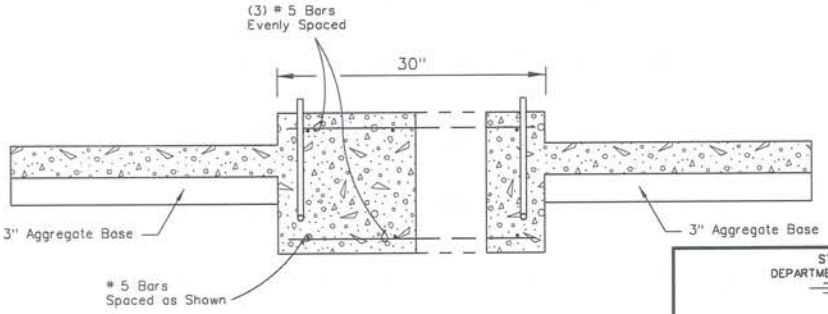

SECTION A-A

STATE OF NEVADA
DEPARTMENT OF TRANSPORTATION

CABINET FOUNDATION (ITS)
TYPE 1

DET. *	(000)	Signed Original On File
ADOPTED */**	REVISED */**	CHIEF SAFETY/TRAFFIC ENGR.

SH199

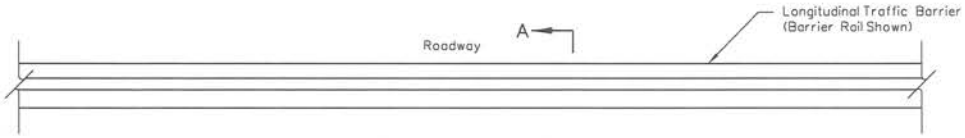

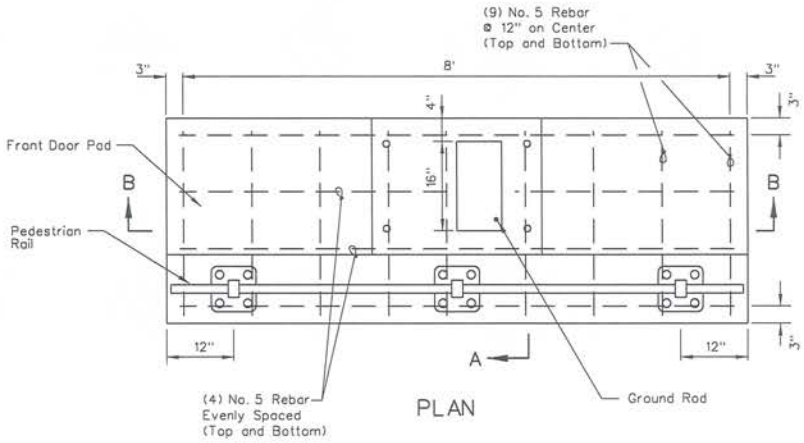

PLAN

NOTES:

1. CONCRETE SHALL BE CLASS A OR AA.
2. STRUCTURE EXCAVATION & BACKFILL SHALL CONFORM TO SECTIONS 206 & 207 OF THE STANDARD SPECIFICATIONS.
3. SEE PLANS FOR NUMBER AND SIZE OF CONDUITS.
4. EXPOSED EDGES OF CONCRETE SHALL BE CHAMFERED 1".
5. SEE PLANS FOR CONDUIT CONFIGURATION.
6. FOR GUARDRAIL SEE METHOD 3 SHEET R-8.3.1.

DESIGN NOTES:

D1. TYPE 2 CABINET FOUNDATION WITH HANDRAIL TO BE USED ON SLOPES OF 3:1 OR STEEPER.

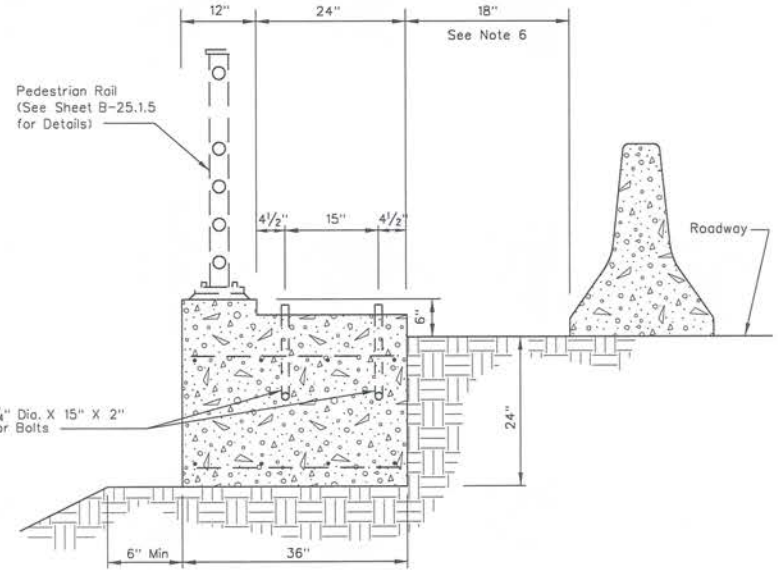

SECTION A-A

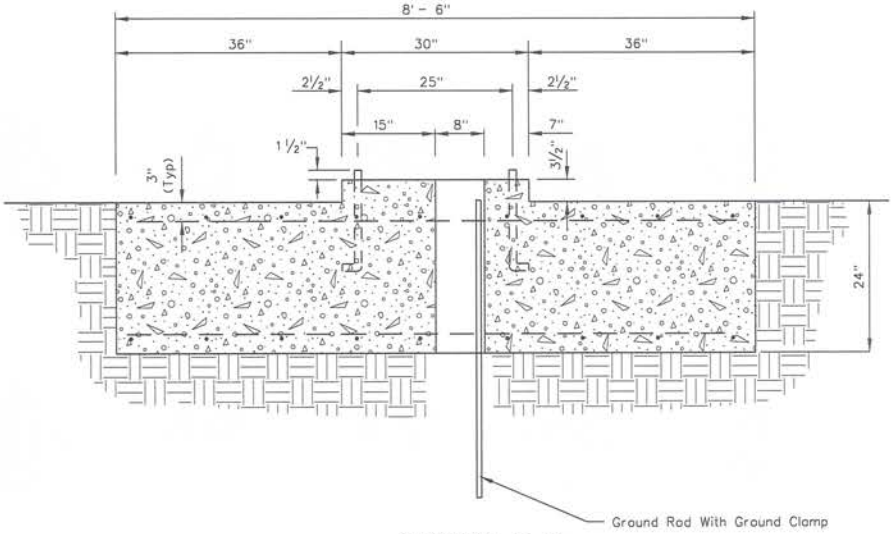

SECTION B-B

STATE OF NEVADA
DEPARTMENT OF TRANSPORTATION

CABINET FOUNDATION (ITS)
TYPE 2

DET. *	(000)	Signed Original On File
ADOPTED */**	REVISED */**	CHIEF SAFETY/TRAFFIC ENGR.

X-1

Standard Plans Change Request

Requests for modifying the Standard Plans for Road and Bridge Construction must be submitted to:

NDOT Specifications Division
Attn: Standards and Manuals Supervisor
1263 South Stewart Street
Carson City, Nevada 89712

Standard Sheet No.: M-1.13 Page No.: M13 Note: A separate form is required for each change.

Description of requested modification or correction: MOVE NO. 9 PB MODIFIED DETAIL RIGHT AFTER T-30.1.18 AND UPDATE WITH THE ATTACHED DRAWINGS

(Please attach supporting information).

Reason for request: CONTRACTOR CONCERNS

Requestor Information: Name: [signature] Phone: 7566

For Standards/Manuals Personnel Only: ☐ Approved ☐ Denied

Revised by: Signature: _____ Date: _____

Policy Review:
☐ CADD Standards ☐ ASTM ☐ AASHTO ☐ Design Manual ☐ Specifications

Reviewed by: Signature: _____ Date: _____

Notes:

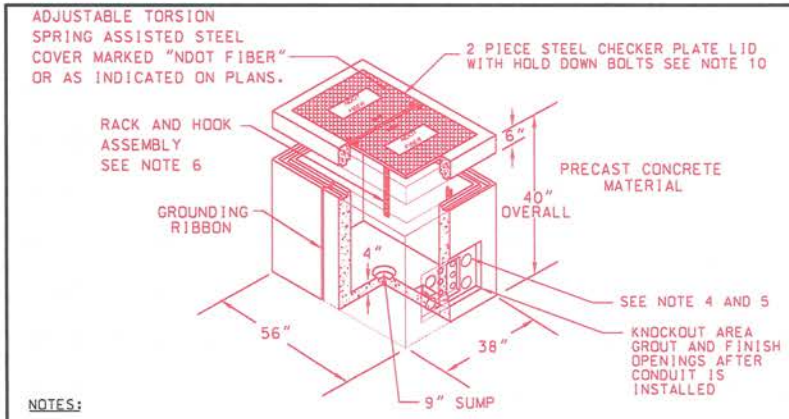

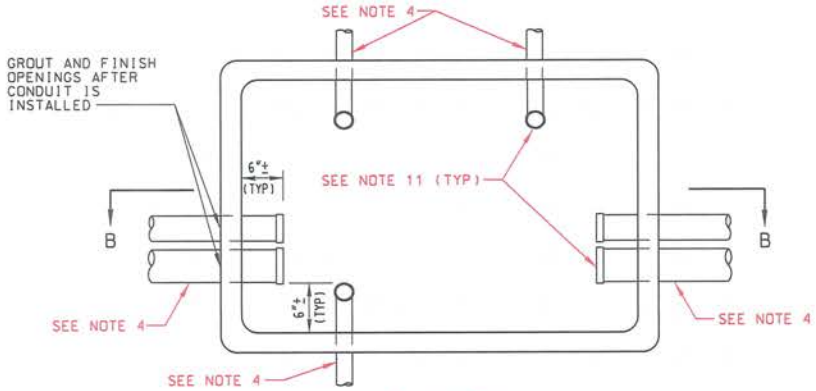

PLAN VIEW
NTS

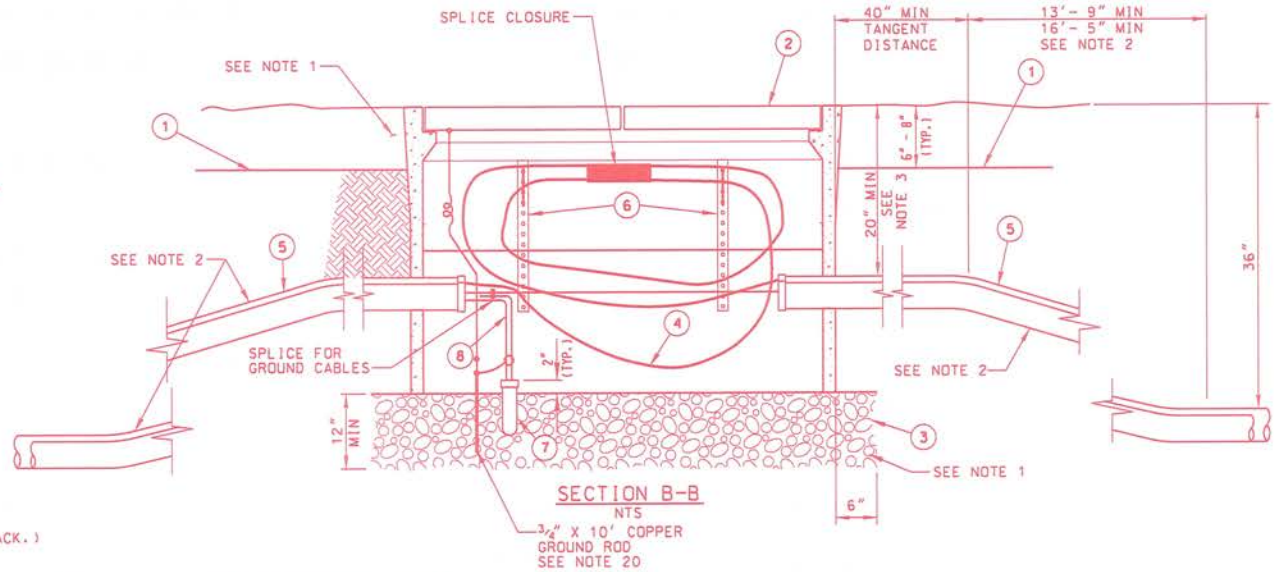

SECTION B-B
NTS

NOTES:

1. BACKFILL ACCORDING TO NDOT STANDARD PLANS AND SPECS.
2. TRUNKLINE CONDUIT(S) FROM THE TYPICAL TRENCH SECTION SHALL NOT DEFLECT BY MORE THAN ONE FOOT PER 10 FEET FROM THE ALIGNMENT PRECEDING OR FOLLOWING PULL BOX ENTRANCE/EXIT.
3. TOP OF TRUNKLINE CONDUITS ENTERING THROUGH SIDE OF PULL BOX SHALL BE LOCATED AT LEAST 20" BELOW EXISTING FINISHED GROUND.
4. SEE PLAN SHEETS FOR NUMBER AND SIZE OF CONDUIT.
5. IF MORE THAN 3 CONDUITS ARE REQUIRED, KNOCKOUT SHALL BE WIDENED 3/8" MORE THAN THE ADDITIONAL CONDUIT WIDTH.
6. ALL PULL BOXES SHALL BE FURNISHED WITH TWO RACKS & HOOKS INSTALLED ON EACH OF THE TWO LONG SIDES.
7. TRUNKLINE CONDUITS SHALL ENTER THROUGH KNOCKOUTS.
8. PULL BOX AND STEEL COVER SHALL SUPPORT AASHTO H20-44 TRUCK LOADING.
9. LOCKING MECHANISM SHALL BE PROVIDED FOR COVER. FOUR 3/4" PENTA HEAD BOLTS AT 90° SHALL BE USED. ONE 3/4" PENTA HEAD SOCKET AND RATCHET SHALL BE PROVIDED TO NDOT FOR EVERY 10 PULL BOXES.
10. "NDOT FIBER" SHALL BE THE TITLE ENGRAVED IN THE LID OR AS INDICATED ON PLANS.
11. ALL 3" AND 4" CONDUITS SHALL HAVE BELL ENDS.
12. ALL POWER CONDUCTORS INSIDE PULL BOX SHALL BE TAGGED "POWER".
13. NUMBERS IN CIRCLES REFER TO ITEMS IN TABLE.
14. SECURE UNDERGROUND SPLICE CLOSURES IN PULL BOXES USING THE RACKS AND HOOKS. ORIENT THE UNDERGROUND SPLICE CLOSURE SO THE END CAP IS AT LEAST 6" BELOW THE OPPOSITE END.
15. PULL BOX HEIGHT SHALL MATCH EXISTING FINISHED GRADE.
16. EACH NUMBER 9 PULL BOX SHALL BE EQUIPPED WITH 100 FEET OF SLACK TRUNKLINE AND BRANCH FIBER OPTIC CABLE FOR EACH CABLE ENTERING THE PULL BOX. (i.e., TRUNKLINE TYPICALLY WILL HAVE 200 FEET OF SLACK.)
17. INSTALL CONDUIT PLUGS ON EACH CONDUIT OR INNERDUCT ENTERING THE PULL BOX.
18. ALL METAL PULL BOX LIDS SHALL BE GROUNDED. INSTALL A STRANDED #4 (GREEN, 7-STRAND) THW WIRE, 4 FEET IN LENGTH, FROM THE LID TO THE BONDING GROUND. FASTEN THE #4 CONDUCTOR TO THE LID BY CAD WELDING. ALL CONDUITS SHALL HAVE A MINIMUM OF 6" CLEARANCE FROM THE TOP OF THE CONDUIT TO THE LID, AT NO DIRECT PAYMENT.
19. SEAL ALL CONDUIT ENDS WITH A DUCT SEALING COMPOUND. USE NSI INDUSTRIES DUCT SEALING COMPOUND OR AN APPROVED EQUAL (NO DIRECT PAYMENT).
20. GROUND CONDUCTOR(S) SHALL BE BONDED AND GROUNDED PRE STANDARD SPECIFICATION(S) AS REQUIRED.
21. DESIGN LOAD: H-20 WHEEL LOADINGS
22. SUITABLE FOR USE IN OFF STREET LOCATIONS WHERE NOT SUBJECT TO HIGH DENSITY TRAFFIC. IT SHALL NOT BE USED IN TRAVEL OR PARKING LANES.
23. INSIDE DIMENSIONS - 30"X45"X36"
24. FOR USE AT FIBER OPTIC SPLICE POINTS.

TABLE

ITEM	DESCRIPTION
1	WARNING TAPE
2	NO. 9 PULL BOX WITH LID & EXTENSIONS
3	BEDDING MATERIAL PER NDOT STANDARD PLAN T-30.1.18
4	FIBER OPTIC CABLE, AS REQUIRED
5	CONDUIT (SEE PLANS FOR SIZE AND QUANTITY)
6	RACK & HOOK ASSEMBLY (SEE NOTE 6)
7	90 DEGREE ELBOW, 15" RADIUS
8	POWER CONDUCTORS (SEE NOTE 12)

STATE OF NEVADA
DEPARTMENT OF TRANSPORTATION

ITS CONDUIT
(NO. 9 PULL BOX)
(MODIFIED)

DET. *	(000)	Signed Original On File
ADOPTED */**	REVISED */**	CHIEF SAFETY/TRAFFIC ENGR.

X-1

QUALITY ASSURANCE	FED. RD. REG. NO.	STATE	PROJECT NO.	COUNTY	SHEET NO.
	9	NEVADA	313-10-050	CLARK	ID-3

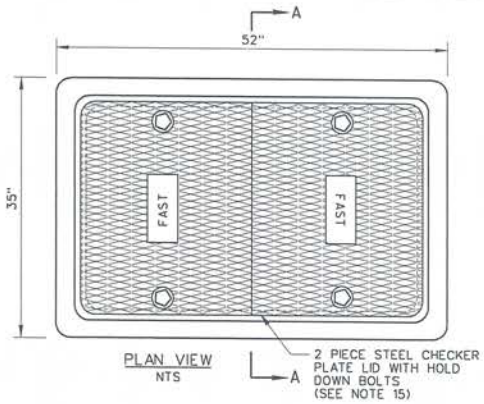

PLAN VIEW
NTS

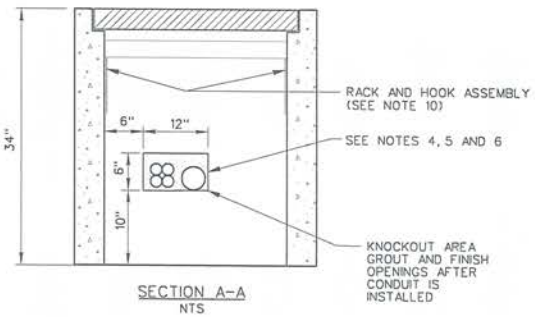

SECTION A-A
NTS

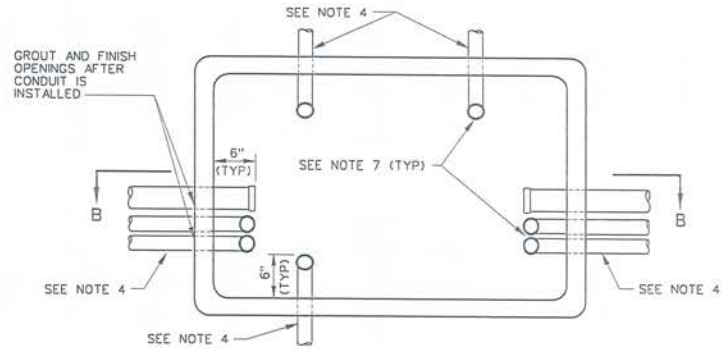

PLAN VIEW
NTS

NOTES:

1. NUMBERS IN CIRCLES REFER TO ITEMS IN TABLE.
2. BACKFILL ACCORDING TO NDOT STANDARD PLANS AND SPECS.
3. TRUNKLINE CONDUIT(S) FROM THE TYPICAL TRENCH SECTION SHALL NOT DEFLECT BY MORE THAN ONE FOOT PER 10 FEET FROM THE ALIGNMENT PRECEDING OR FOLLOWING PULL BOX ENTRANCE/EXIT.
4. SEE PLAN SHEETS FOR NUMBER AND SIZE OF CONDUIT(S).
5. TRUNKLINE CONDUITS SHALL ENTER THROUGH KNOCKOUTS.
6. IF MORE THAN 3 CONDUIT ARE REQUIRED, KNOCKOUT SHALL BE WIDENED ½" MORE THAN THE ADDITIONAL CONDUIT WIDTH.
7. ALL CONDUITS SHALL HAVE BELL ENDS.
8. FURNISH AND INSTALL CAPS OR DUCT PLUGS FOR EACH CONDUIT OR INTERDUCT ENTERING THE PULL BOX. SEAL ENDS OF ALL CONDUITS WITH CABLES OR CONDUCTORS WITH NDOT APPROVED MATERIAL.
9. TOP OF TRUNKLINE CONDUITS ENTERING THROUGH SIDE OF PULL BOX SHALL BE LOCATED AT LEAST 20" BELOW EXISTING FINISHED GROUND.
10. ALL PULL BOXES SHALL BE FURNISHED WITH TWO RACKS AND HOOKS INSTALLED ON EACH OF THE TWO LONG SIDES.
11. PULL BOX HEIGHT SHALL MATCH EXISTING FINISHED GRADE.
12. GROUND CONDUCTOR(S) SHALL BE BONDED AND GROUNDED PER STANDARD SPECIFICATIONS (AS REQUIRED).
13. PULL BOX AND STEEL COVER SHALL SUPPORT AASHTO H20-44 TRUCK LOADING.
14. LOCKING MECHANISM SHALL BE PROVIDED FOR COVER. FOUR ¾" PENTA HEAD BOLTS AT 90° SHALL BE USED. ONE ¾" PENTA HEAD SOCKET AND RATCHET SHALL BE PROVIDED TO NDOT FOR EVERY 10 PULL BOXES.
15. "FAST" SHALL BE THE TITLE ENGRAVED ON THE LID. BOND AND GROUND LID PER SECTION 623.02.17 OF THE STANDARD SPECIFICATIONS.
16. ANY REVISIONS TO PULL BOX DIMENSIONS SHALL BE APPROVED BY THE RESIDENT ENGINEER.
17. PULL BOX LID BONDING/GROUND CONDUCTOR SHALL BE 4 FT OF #4 GREEN STRANDED GROUND WIRE CAD WELDED TO LID PER NDOT REQUIREMENTS. GROUND WIRE SHALL BE COILED FOR FUTURE BONDING AND GROUNDING. IF PULL BOX INSTALLATION IS REPLACING AND EXISTING PULL BOX, THEN THE CONDUCTOR SHALL BE BONDED TO THE EXISTING GROUNDING SYSTEM. IF THERE ARE MORE THAN ONE LID, GROUND ALL LIDS.
18. GROUNDING AND BONDING CABLES WILL BE INSTALLED WHEN NEW CONDUCTORS AND CABLES ARE INSTALLED.
19. COVER TOP OF BOX WITH 30 LB FELT PAPER TO HELP PROTECT METAL LID.
20. CONTRACTOR TO GPS LOCATE ALL PULL BOXES PER NDOT GUIDE "SPECIAL INSTRUCTIONS FOR SURVEY, MAPPING OR GIS CONSULTANTS," CURRENT EDITION.

TABLE

ITEM	DESCRIPTION
1	WARNING TAPE
2	NO. 9 PULL BOX WITH LID & EXTENSIONS
3	BEDDING MATERIAL PER NDOT STANDARD PLAN T-30.1.18
4	GROUND OR BOND WIRES/CABLES
5	CONDUIT (SEE PLANS FOR SIZE AND QUANTITY)
6	RACK & HOOK ASSEMBLY (SEE NOTE 10)
7	90 DEGREE ELBOW, 15" RADIUS

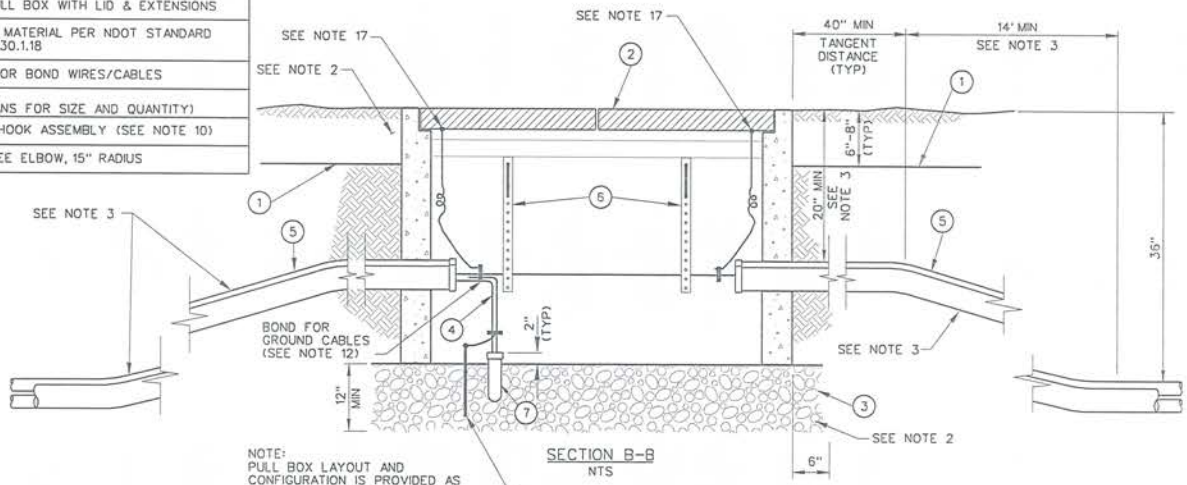

SECTION B-B
NTS

NOTE:
PULL BOX LAYOUT AND CONFIGURATION IS PROVIDED AS REFERENCE DESIGN. SUBSTITUTE PULL BOX CONFIGURATIONS MEETING PROJECT SPECIFICATIONS MAY BE USED IF APPROVED BY NDOT.

¾" x 118" COPPER GROUND ROD (AS REQUIRED) (SEE NOTE 12)

Designed By: RWF		
Detailed By: BLH		
Checked By: MDC	NO.	DESCRIPTION	DATE
	ISSUE RECORD	

Call before you dig 811 1-800-227-2600 | FAST | Call before you Underground 1-702-432-5300 | CALL BEFORE YOU DIG 1-702-227-2929

QUALITY ASSURANCE SUBMITTAL
FOR REVIEW ONLY SUBJECT TO REVISION NOT FOR CONSTRUCTION 7/01/11

Kimley-Horn and Associates, Inc.
© 2011 KIMLEY-HORN AND ASSOCIATES, INC.
2080 E. FLAMINGO RD, SUITE 210
LAS VEGAS, NV 89119
PHONE: (702) 734-5666 FAX: (702) 735-4949

STATE OF NEVADA
DEPARTMENT OF TRANSPORTATION

FAST PACKAGE F

NO. 9 PULL BOX AND TYPICAL INSTALLATION ITS DETAIL

1.00 " / IN. PLOT SCALE

sean.robinson

K:\LAV_PublicTrans\092202_NDOT\014 Package F\CADD\xxxF1_ID003.dgn 6/30/2011 sean.robinson

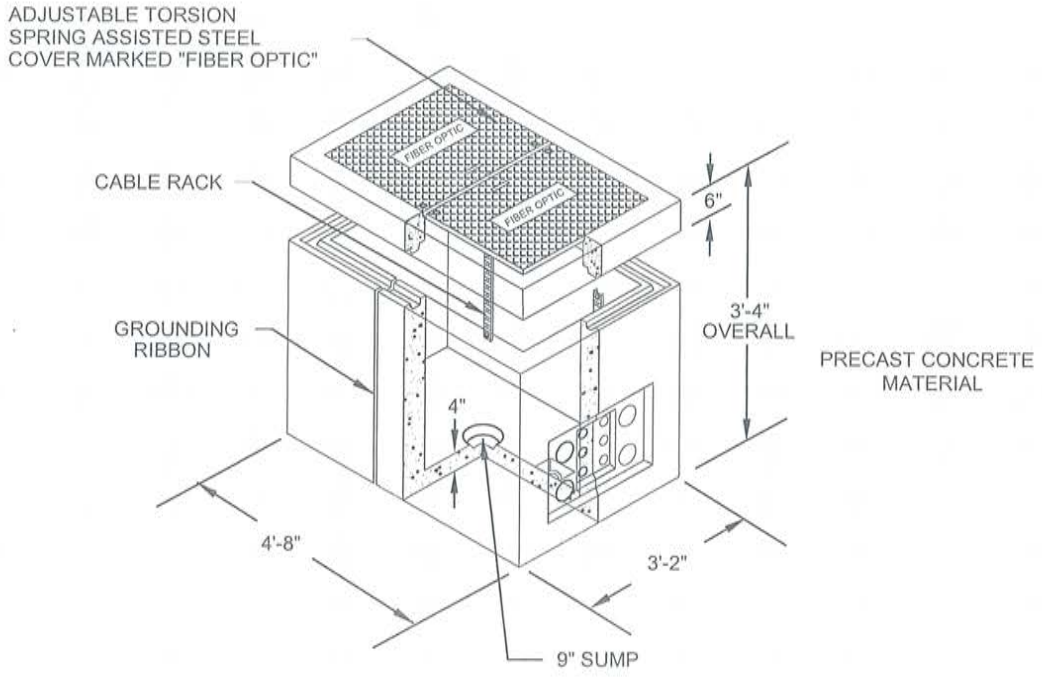

NOTES:

1. DESIGN LOAD: H-20 WHEEL LOADINGS.
2. SUITABLE FOR USE IN OFF STREET LOCATIONS WHERE NOT SUBJECT TO HIGH DENSITY TRAFFIC. IT SHALL NOT BE USED IN TRAVEL OR PARKING LANES.
3. INSIDE DIMENSIONS - 30"X48"X36"
4. FOR USE AT FIBER OPTIC SPLICE POINTS.

TYPE 200 VAULT

AGENCY APPROVED	B	C	H	L	M	N

SPECIFICATION REFERENCE	

UNIFORM STANDARD DRAWINGS
CLARK COUNTY AREA

TYPE 200 VAULT
(FOR USE AT FIBER OPTIC SPLICE POINTS)

DATE 3-13-08	DWG. NO. 762	

Standard Plans Change Request

Requests for modifying the Standard Plans for Road and Bridge Construction must be submitted to:

NDOT Specifications Division
Attn: Standards and Manuals Supervisor
1263 South Stewart Street
Carson City, Nevada 89712

Standard Sheet No.: B-20.1.1 Page No.: B-1 Note: A separate form is required for each change.

Description of requested modification or correction: Updated notes. ..... (Please attach supporting information).

Reason for request: RCB designs have been updated for new design requirements. .....

Requestor Information: Name: Troy Martin Phone: 888-7380

==========

For Standards/Manuals Personnel Only: ☐ Approved ☐ Denied

Revised by: Signature: _____ Date: _____

Policy Review:
☐ CADD Standards ☐ ASTM ☐ AASHTO ☐ Design Manual ☐ Specifications

Reviewed by: Signature: _____ Date: _____

Notes: .....

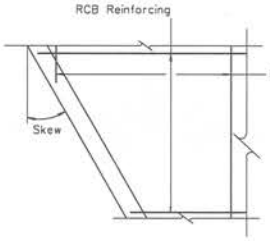

SINGLE SPAN PLAN

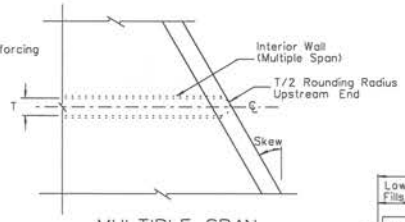

MULTIPLE SPAN PLAN

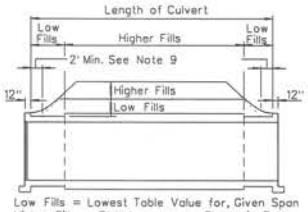

Low Fills = Lowest Table Value for, Given Span
Higher Fills = Slab Increase as Shown in Table

FILL HEIGHT TRANSITIONS

ELEVATION

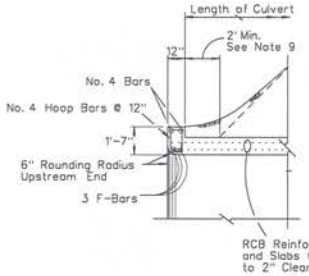

SINGLE SPAN

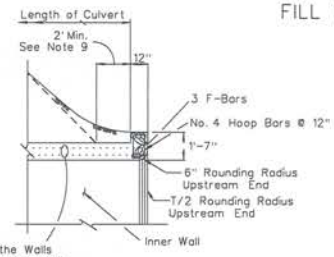

MULTIPLE SPAN

ELEVATION

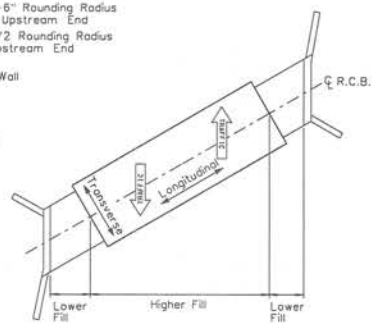

SKEWED PLAN

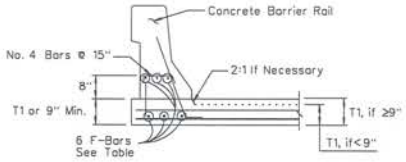

PARAPET DETAILS

COPING REINFORCING INCLUDED IN THE HEADWALL QUANTITIES

SKEWED PARAPETS									
SKEW ANGLE		SPAN	5	6	7	8	10	12	14
0° - 15°	F-BARS	BAR No.	4	5	5	6	7	8	8
16° - 30°	F-BARS	BAR No.	5	6	6	7	8	8	8
31° - 45°	F-BARS	BAR No.	6	6	6	7	8	8	8
0° - 45°	No. 4 HOOPS		12" CTRS.						

GENERAL NOTES:

1. DESIGN SPECIFICATIONS : "AASHTO LRFD BRIDGE DESIGN SPECIFICATIONS 2012".
2. CONSTRUCTION SPECIFICATIONS: STATE OF NEVADA DEPARTMENT OF TRANSPORTATION "STANDARD SPECIFICATIONS FOR ROAD AND BRIDGE CONSTRUCTION, 2014".
3. LIVE LOADS:
   HL-93 DESIGN TRUCK (32.0 KIP AXLE)
   HL-93 DESIGN TANDEM (TWO 25.0 KIP AXLES SPACED 4 FT. APART)
   (LIVE LOAD IMPACT FACTOR FOR TOP SLAB IS 33% UP TO 2 FT. OF COVER)

   LATERAL LIVE LOAD PRESSURE:
   EQUIVALENT TO 2 FT. O F EARTH SURCHARGE APPLIED HORIZONTALLY.
   =240 PSF

   (NO SURCHARGE ADDED TO HEADWALLS, TYPE I & II)

   DEAD LOADS: SOIL UNIT WEIGHT = 120 PCF
   MIN LATERAL EARTH PRESSURE = 30 PCF
   MAX LATERAL EARTH PRESSURE = 60 PCF
   (TYPE I HEADWALLS DESIGNED TO 36 PCF)
4. CONCRETE: CLASS DA MODIFIED (MAJOR) F'C=4,500 PSI @ 28 DAYS. (CLASS D IN CLARK COUNTY)
5. REINFORCING STEEL: ALL REINFORCING STEEL TO BE ASTM A615. DIMENSION RELATING TO BAR SPACING ARE CENTER TO CENTER
6. FOUNDATION PRESSURE: THE RCB CULVERTS ARE DESIGNED TO THE FOLLOWING SOIL BEARING PRESSURES:

COVER HEIGHTS	10 FT.	20 FT.
RCB HEIGHT	TON/SQ.FT.	
6 FT.	1.0	1.6
8 FT.	1.1	1.7
10 FT.	1.2	1.8
12 FT.	1.3	1.9
14 FT.	1.4	2.0

7. SPECIAL DESIGN: CULVERTS WITH CONDITIONS, LOADING, OR SIZES DISSIMILAR TO THOSE GIVEN ON THESE RCB CULVERT SHEETS MAY REQUIRE A SPECIAL DESIGN.
8. DESIGNATION: BOX CULVERTS ARE SHOWN ON PLANS AS SPAN TIMES HEIGHT TIMES LENGTH (10' x 8' x 196' RCB).
9. ADDITIONAL LENGTH: LENGTH OF CULVERT SHALL BE INCREASED AS FOLLOWS: ADD 2' TO EACH END WHEN COVER AT SHOULDER IS 0' TO 5'. ADD AN ADDITIONAL 1' TO EACH END FOR EACH SUCCEEDING 5' OF COVER OR PORTION THEREOF.
10. HEADWALLS: ALL RCB CULVERTS SHALL HAVE TYPE I HEADWALLS UNLESS OTHERWISE NOTED ON THE PLANS.
11. QUANTITIES: QUANTITIES DO NOT INCLUDE "d" BARS, NOR SPLICES IN BARS, NOR CONCRETE OR REINFORCEMENT FOR PARAPETS OR PAVING LEDGES.
12. THREE OR MORE CELLS: FOR CULVERTS WITH MORE THAN TWO CELLS, USE DIMENSIONS AND REINFORCEMENT FOR THE "DOUBLE BOX CULVERT" AND ADJUST THE QUANTITIES ACCORDINGLY.

NEVADA DEPARTMENT OF TRANSPORTATION

R.C.B., CULVERTS, GENERAL NOTES

Signed Original On File	B-20.1.1 (502,505)
CHIEF BRIDGE ENGINEER	ADOPTED 11/73 REVISION 3/15

Standard Plans Change Request

Requests for modifying the Standard Plans for Road and Bridge Construction must be submitted to:

NDOT Specifications Division
Attn: Standards and Manuals Supervisor
1263 South Stewart Street
Carson City, Nevada 89712

Standard Sheet No.: B-20.1.2 Page No.: B-2 Note: A separate form is required for each change.

Description of requested modification or correction: Replaced entire sheet with new design. (Please attach supporting information).

Reason for request: RCB designs have been updated for new design requirements.

Requestor Information: Name: Troy Martin Phone: 888-7380

==========

For Standards/Manuals Personnel Only: ☐ Approved ☐ Denied

Revised by: Signature: _____ Date: _____

Policy Review:
☐ CADD Standards ☐ ASTM ☐ AASHTO ☐ Design Manual ☐ Specifications

Reviewed by: Signature: _____ Date: _____

Notes:

B-2

SPAN, "S"		FT.	5						6							
HEIGHT, "H"		FT.	3		4		5		3		4		5		6	
MAXIMUM EARTH COVER		FT.	10	20	10	20	10	20	10	20	10	20	10	20	10	20
CONC.	ROOF T1	IN.	9½	9½	9½	9½	9½	9½	10	10	10	10	10	10	10	10
CONC.	WALLS T2	IN.	8	8	8	8	8	8	8	8	8	8	8	8	8	8
CONC.	INVERT T3	IN.	8	8	8	8	8	8	9	9	9	9	9	9	9	9
REINFORCEMENT "a"	BAR SIZE		4	5	4	5	4	5	5	5	5	5	5	5	5	5
REINFORCEMENT "a"	SPACING	IN.	6	6	6	6	6	6	6	6	6	6	6	6	6	6
REINFORCEMENT "a"	LENGTH	ft-in	6-0	6-0	6-0	6-0	6-0	6-0	7-0	7-0	7-0	7-0	7-0	7-0	7-0	7-0
REINFORCEMENT "b"	BAR SIZE		4	4	4	4	4	4	4	4	4	4	4	4	4	4
REINFORCEMENT "b"	SPACING	IN.	6	6	6	6	6	6	6	6	6	6	6	6	6	6
REINFORCEMENT "b"	LENGTH	ft-in	5-7	5-7	6-1	6-1	6-7	6-7	5-9	5-9	6-3	6-3	6-9	6-9	7-3	7-3
REINFORCEMENT "b"	B	ft-in	2-8	2-8	2-8	2-8	2-8	2-8	2-10	2-10	2-10	2-10	2-10	2-10	2-10	2-10
REINFORCEMENT "c"	BAR SIZE		4	4	4	4	4	4	4	4	4	4	4	4	4	4
REINFORCEMENT "c"	SPACING	IN.	12	12	12	12	12	12	12	12	12	12	12	12	12	12
REINFORCEMENT "c"	LENGTH	ft-in	4-0	4-0	5-0	5-0	6-0	6-0	4-2	4-2	5-2	5-2	6-2	6-2	7-2	7-2
REINFORCEMENT #4@ 12"	LENGTH	ft-in	2-7	2-7	2-7	2-7	2-7	2-7	3-5	3-5	3-5	3-5	3-5	3-5	3-5	3-5
REINFORCEMENT #4@ 12"	NUMBER*		40	40	44	44	48	48	44	44	48	48	52	52	56	56
QUANT.	CONCRETE	CF/LF	13.2	13.2	14.6	14.6	15.9	15.9	15.6	15.6	16.9	16.9	18.3	18.3	19.6	19.6
QUANT.	REINFORCEMENT	LB/LF	81	90	88	97	95	104	99	99	106	106	113	113	119	119

SPAN, "S"		FT.	7									
HEIGHT, "H"		FT.	3		4		5		6		7	
MAXIMUM EARTH COVER		FT.	10	20	10	20	10	20	10	20	10	20
CONC.	ROOF T1	IN.	10	10	10	10	10	10	10	10	10	10
CONC.	WALLS T2	IN.	8	8	8	8	8	8	8	8	8	8
CONC.	INVERT T3	IN.	10	10	10	10	10	10	10	10	10	10
REINFORCEMENT "a"	BAR SIZE		5	6	5	6	5	6	5	6	5	6
REINFORCEMENT "a"	SPACING	IN.	6	6	6	6	6	6	6	6	6	6
REINFORCEMENT "a"	LENGTH	ft-in	8-0	8-0	8-0	8-0	8-0	8-0	8-0	8-0	8-0	8-0
REINFORCEMENT "b"	BAR SIZE		4	4	4	4	4	4	4	4	4	5
REINFORCEMENT "b"	SPACING	IN.	6	6	6	6	6	6	6	6	6	6
REINFORCEMENT "b"	LENGTH	ft-in	5-11	5-11	6-4	6-5	6-10	6-11	7-4	7-5	7-11	8-6
REINFORCEMENT "b"	B	ft-in	2-11	2-11	2-11	2-11	2-11	2-11	2-11	2-11	2-11	3-4
REINFORCEMENT "c"	BAR SIZE		4	4	4	4	4	4	4	4	4	5
REINFORCEMENT "c"	SPACING	IN.	12	12	12	12	12	12	12	12	12	12
REINFORCEMENT "c"	LENGTH	ft-in	4-3	4-3	5-3	5-3	6-3	6-3	7-3	7-3	8-3	8-3
REINFORCEMENT #4@ 12"	LENGTH	ft-in	4-2	4-2	4-2	4-2	4-2	4-2	4-2	4-2	4-2	3-4
REINFORCEMENT #4@ 12"	NUMBER*		48	48	52	52	56	56	60	60	64	64
QUANT.	CONCRETE	CF/LF	17.9	17.9	19.2	19.2	20.6	20.6	21.9	21.9	23.2	23.2
QUANT.	REINFORCEMENT	LB/LF	108	123	115	129	121	136	128	143	135	184

SPAN, "S"		FT.	8									
HEIGHT, "H"		FT.	4		5		6		7		8	
MAXIMUM EARTH COVER		FT.	10	20	10	20	10	20	10	20	10	20
CONC.	ROOF T1	IN.	10½	10½	10½	10½	10½	10½	10½	10½	10½	10½
CONC.	WALLS T2	IN.	8	8	8	8	8	8	8	8	8	8
CONC.	INVERT T3	IN.	10½	10½	10½	10½	10½	10½	10½	10½	10½	10½
REINFORCEMENT "a"	BAR SIZE		5	7	5	7	5	7	5	7	5	7
REINFORCEMENT "a"	SPACING	IN.	6	6	6	6	6	6	6	6	6	6
REINFORCEMENT "a"	LENGTH	ft-in	9-0	9-0	9-0	9-0	9-0	9-0	9-0	9-0	9-0	9-0
REINFORCEMENT "b"	BAR SIZE		4	5	4	5	4	6	4	6	6	6
REINFORCEMENT "b"	SPACING	IN.	6	6	6	6	6	6	6	6	6	6
REINFORCEMENT "b"	LENGTH	ft-in	6-6	7-2	7-0	7-8	7-6	8-10	8-0	8-8	9-10	9-10
REINFORCEMENT "b"	B	ft-in	3-0	3-5	3-0	3-5	3-0	3-10	3-0	3-5	3-10	3-10
REINFORCEMENT "c"	BAR SIZE		4	4	4	4	4	4	4	5	4	5
REINFORCEMENT "c"	SPACING	IN.	12	12	12	12	12	12	12	12	12	12
REINFORCEMENT "c"	LENGTH	ft-in	5-4	5-4	6-4	6-4	7-4	7-4	8-4	8-4	9-4	9-4
REINFORCEMENT #4@ 12"	LENGTH	ft-in	5-0	4-2	5-0	4-2	5-0	3-4	5-0	4-2	3-4	3-4
REINFORCEMENT #4@ 12"	NUMBER*		56	56	60	60	64	64	68	68	72	72
QUANT.	CONCRETE	CF/LF	21.7	21.7	23.0	23.0	24.3	24.3	25.7	25.7	27.0	27.0
QUANT.	REINFORCEMENT	LB/LF	124	183	130	192	137	236	144	214	220	263

SPAN, "S"		FT.	10											
HEIGHT, "H"		FT.	5		6		7		8		9		10	
MAXIMUM EARTH COVER		FT.	10	20	10	20	10	20	10	20	10	20	10	20
CONC.	ROOF T1	IN.	11	11	11	11	11	11	11	11	11	11	11	11
CONC.	WALLS T2	IN.	10	10	10	10	10	10	10	10	10	10	10	10
CONC.	INVERT T3	IN.	12	13	12	13	12	13	12	13	12	13	12	13
REINFORCEMENT "a"	BAR SIZE		6	7	6	7	6	7	6	7	6	7	6	7
REINFORCEMENT "a"	SPACING	IN.	6	6	6	6	6	6	6	6	6	6	6	6
REINFORCEMENT "a"	LENGTH	ft-in	11-4	11-4	11-4	11-4	11-4	11-4	11-4	11-4	11-4	11-4	11-4	11-4
REINFORCEMENT "b"	BAR SIZE		5	6	5	6	5	6	5	6	5	6	5	7
REINFORCEMENT "b"	SPACING	IN.	6	6	6	6	6	6	6	6	6	6	6	6
REINFORCEMENT "b"	LENGTH	ft-in	8-1	8-9	8-7	9-3	9-1	9-9	9-7	10-3	10-1	10-9	10-7	11-11
REINFORCEMENT "b"	B	ft-in	3-10	4-3	3-10	4-3	3-10	4-3	3-10	4-3	3-10	4-3	3-10	4-8
REINFORCEMENT "c"	BAR SIZE		4	5	4	5	4	5	4	5	4	5	4	5
REINFORCEMENT "c"	SPACING	IN.	12	12	12	12	12	12	12	12	12	12	12	12
REINFORCEMENT "c"	LENGTH	ft-in	6-6	6-7	7-6	7-7	8-6	8-7	9-6	9-7	10-6	10-7	11-6	11-7
REINFORCEMENT #4@ 12"	LENGTH	ft-in	5-9	4-11	5-9	4-11	5-9	4-11	5-9	4-11	5-9	4-11	5-9	4-1
REINFORCEMENT #4@ 12"	NUMBER*		68	68	72	72	76	76	80	80	84	84	88	88
QUANT.	CONCRETE	CF/LF	30.7	31.7	32.4	33.3	34.0	35.0	35.7	36.7	37.4	38.3	39.0	40.0
QUANT.	REINFORCEMENT	LB/LF	198	264	206	275	214	285	222	296	230	307	238	376

SPAN, "S"		FT.	12													
HEIGHT, "H"		FT.	6		7		8		9		10		11		12	
MAXIMUM EARTH COVER		FT.	10	20	10	20	10	20	10	20	10	20	10	20	10	20
CONC.	ROOF T1	IN.	11	13	11	13	11	13	11	13	11	13	11	13	11	13
CONC.	WALLS T2	IN.	10	12	10	12	10	12	10	12	10	12	10	12	10	12
CONC.	INVERT T3	IN.	12	15	12	15	12	15	12	15	12	15	12	15	12	15
REINFORCEMENT "a"	BAR SIZE		7	8	7	8	7	8	7	8	7	8	7	8	7	8
REINFORCEMENT "a"	SPACING	IN.	6	6	6	6	6	6	6	6	6	6	6	6	6	6
REINFORCEMENT "a"	LENGTH	ft-in	13-4	13-8	13-4	13-8	13-4	13-8	13-4	13-8	13-4	13-8	13-4	13-8	13-4	13-8
REINFORCEMENT "b"	BAR SIZE		6	7	6	7	6	7	6	7	6	7	6	7	6	7
REINFORCEMENT "b"	SPACING	IN.	6	6	6	6	6	6	6	6	6	6	6	6	6	6
REINFORCEMENT "b"	LENGTH	ft-in	9-5	10-5	9-11	10-11	10-5	11-5	10-11	11-11	11-5	12-5	11-11	12-11	12-5	13-5
REINFORCEMENT "b"	B	ft-in	4-5	5-0	4-5	5-0	4-5	5-0	4-5	5-0	4-5	5-0	4-5	5-0	4-5	5-0
REINFORCEMENT "c"	BAR SIZE		4	5	4	5	4	5	4	5	4	5	4	5	5	6
REINFORCEMENT "c"	SPACING	IN.	12	12	12	12	12	12	12	12	12	12	12	12	12	12
REINFORCEMENT "c"	LENGTH	ft-in	7-6	7-11	8-6	8-11	9-6	9-11	10-6	10-11	11-6	11-11	12-6	12-10	13-6	13-11
REINFORCEMENT #4@ 12"	LENGTH	ft-in	6-6	5-8	6-6	5-8	6-6	5-8	6-6	5-8	6-6	5-8	6-6	5-8	6-6	5-8
REINFORCEMENT #4@ 12"	NUMBER*		80	80	84	84	88	88	92	92	96	96	100	100	104	104
QUANT.	CONCRETE	CF/LF	36.2	44.7	37.9	46.7	39.5	48.7	41.2	50.7	42.9	52.7	44.5	54.7	46.2	56.7
QUANT.	REINFORCEMENT	LB/LF	295	394	305	407	315	420	325	433	335	446	345	459	365	485

SPAN, "S"		FT.	14															
HEIGHT, "H"		FT.	7		8		9		10		11		12		13		14	
MAXIMUM EARTH COVER		FT.	10	20	10	20	10	20	10	20	10	20	10	20	10	20	10	20
CONC.	ROOF T1	IN.	13	15	13	15	13	15	13	15	13	15	13	15	13	15	13	15
CONC.	WALLS T2	IN.	12	13	12	13	12	13	12	13	12	13	12	13	12	13	12	14
CONC.	INVERT T3	IN.	14	17	14	17	14	17	14	17	14	17	14	17	14	17	14	17
REINFORCEMENT "a"	BAR SIZE		7	8	7	8	7	8	7	8	7	8	7	8	7	8	7	8
REINFORCEMENT "a"	SPACING	IN.	6	6	6	6	6	6	6	6	6	6	6	6	6	6	6	6
REINFORCEMENT "a"	LENGTH	ft-in	15-8	15-10	15-8	15-10	15-8	15-10	15-8	15-10	15-8	15-10	15-8	15-10	15-8	15-10	15-8	16-0
REINFORCEMENT "b"	BAR SIZE		6	7	6	7	6	7	6	7	6	7	6	7	6	7	7	8
REINFORCEMENT "b"	SPACING	IN.	6	6	6	6	6	6	6	6	6	6	6	6	6	6	6	6
REINFORCEMENT "b"	LENGTH	ft-in	10-6	11-5	11-0	11-11	11-6	12-5	12-0	12-11	12-6	13-5	13-0	13-11	13-6	14-5	14-7	16-1
REINFORCEMENT "b"	B	ft-in	4-9	5-4	4-9	5-4	4-9	5-4	4-9	5-4	4-9	5-4	4-9	5-4	4-9	5-4	5-3	6-1
REINFORCEMENT "c"	BAR SIZE		4	5	4	6	4	6	4	6	4	6	4	6	5	6	6	7
REINFORCEMENT "c"	SPACING	IN.	12	12	12	12	12	12	12	12	12	12	12	12	12	12	12	12
REINFORCEMENT "c"	LENGTH	ft-in	8-10	9-3	9-10	10-3	10-10	11-3	11-10	12-3	12-10	13-3	13-10	14-3	14-10	15-3	15-10	16-3
REINFORCEMENT #4@ 12"	LENGTH	ft-in	8-1	7-3	8-1	7-3	8-1	7-3	8-1	7-3	8-1	7-3	8-1	7-3	8-1	7-3	7-3	5-10
REINFORCEMENT #4@ 12"	NUMBER*		92	92	96	96	100	100	104	104	108	108	112	112	116	116	120	120
QUANT.	CONCRETE	CF/LF	50.0	58.3	52.0	60.4	54.0	62.6	56.0	64.8	58.0	66.9	60.0	69.1	62.0	71.3	64.0	76.2
QUANT.	REINFORCEMENT	LB/LF	338	446	348	468	358	482	368	496	378	510	388	524	409	538	504	668

* QUANTITY INCLUDES #4 CORNER BARS

NOTES:

1. DESIGN SPECIFICATIONS: "AASHTO LRFD BRIDGE DESIGN SPECIFICATIONS 2012"

2. CONSTRUCTION SPECIFICATIONS: "STATE OF NEVADA DEPARTMENT OF TRANSPORTATION STANDARD SPECIFICATIONS FOR ROAD AND BRIDGE CONSTRUCTION 2014"

3. LIVE LOADS:
   HL-93 DESIGN TRUCK (32.0 KIP AXLE)
   HL-93 DESIGN TANDEM (TWO 25.0 KIP AXLES SPACED 4 FT. APART)
   (LIVE LOAD IMPACT FACTOR FOR TOP SLAB IS 33% UP TO 2 FT. OF COVER)
   LATERAL LIVE LOAD PRESSURE:
   EQUIVALENT TO 2 FT. O F EARTH SURCHARGE APPLIED HORIZONTALLY.
   =240 PSF

   DEAD LOADS:
   SOIL UNIT WEIGHT = 120 PCF
   MIN LATERAL EARTH PRESSURE = 30 PCF
   MAX LATERAL EARTH PRESSURE = 60 PCF

4. CONCRETE: CLASS DA MODIFIED (MAJOR) F'C=4,500 PSI@ 28 DAYS. (CLASS D IN CLARK COUNTY)

5. REINFORCING STEEL: ALL REINFORCING STEEL TO BE ASTM A615. DIMENSION RELATING TO BAR SPACING ARE CENTER TO CENTER

6. DESIGNATION: BOX CULVERTS ARE SHOWN ON PLANS AS SPAN TIMES HEIGHT TIMES LENGTH (10' x 8' x 196' RCB).

7. WHERE TRAFFIC LOADS WILL BE PLACED DIRECTLY ON THE TOP SURFACE OF THE CULVERT, (AND/OR UP TO 2 FT OF FILL), INCREASE TOP SLAB THICKNESS BY ½" AND COVER FOR TOP REINFORCEMENT FROM 2" TO 2½". PROVIDE EPOXY COATED REINFORCEMENT IN TOP SLAB (EXCEPT IN CLARK COUNTY). DECREASE SPACING OF TOP SLAB BOTTOM LONGITUDINAL BARS (#4 @ 12) TO 6" SPACING. USE EA MODIFIED MAJOR CONCRETE (CLASS E IN CLARK COUNTY) IN LIEU OF CLASS DA. ADJUST QUANTITIES ACCORDINGLY.

8. PROVIDE 2'-0" WIDE TYPE 1 OR TYPE 2 DRAIN BACKFILL WRAPPED IN CLASS 1 OR CLASS 2 NON-WOVEN GEOTEXTILE ALONG FULL HEIGHT OF EACH CULVERT EXTERIOR WALL FACE.

9. PROVIDE PAVING NOTCH WHEN TOP SLAB IS EXPOSED AND WHEN PAVEMENT IS CONCRETE. ADJUST QUANTITIES ACCORDINGLY.

10. FOR GENRAL NOTES, SEE SHEET. B-20.1.1

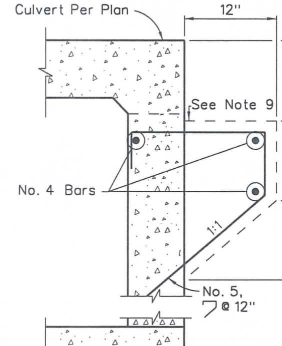

PAVING NOTCH DETAIL

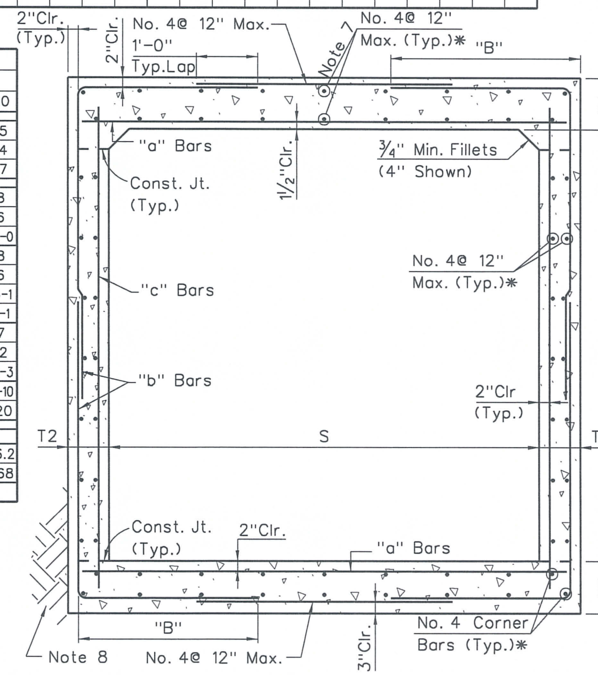

TYPICAL SECTION

(Shown As 7'-0" x 7'-0" For 10 Ft. Of Earth Cover)

BENT BARS

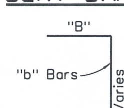

NEVADA DEPARTMENT OF TRANSPORTATION

SINGLE
RCB CULVERTS

Signed Original On File	B-20.1.2
CHIEF BRIDGE ENGINEER	ADOPTED 01/28/15 · REVISION 01/27/15

Standard Plans Change Request

Requests for modifying the Standard Plans for Road and Bridge Construction must be submitted to:

NDOT Specifications Division
Attn: Standards and Manuals Supervisor
1263 South Stewart Street
Carson City, Nevada 89712

Standard Sheet No.: B-20.1.3 Page No.: B-3 Note: A separate form is required for each change.

Description of requested modification or correction: ~~Delete sheet.~~ Replace Entire Sheet with New Design

(Please attach supporting information).

Reason for request: New RCB tables fit on previous sheet.

Requestor Information: Name: Troy Martin Phone: 888-7380

==========

For Standards/Manuals Personnel Only: ☐ Approved ☐ Denied

Revised by: Signature: _____ Date: _____

Policy Review:
☐ CADD Standards ☐ ASTM ☐ AASHTO ☐ Design Manual ☐ Specifications

Reviewed by: Signature: _____ Date: _____

Notes:

SPAN, "S"		FT.	5						6								7								8								10											
HEIGHT, "H"		FT.	3		4		5		3		4		5		6		3		4		5		6		7		4		5		6		7		8		5		6		7		8		9		10	
MAXIMUM EARTH COVER		FT.	10	20	10	20	10	20	10	20	10	20	10	20	10	20	10	20	10	20	10	20	10	20	10	20	10	20	10	20	10	20	10	20	10	20	10	20	10	20	10	20	10	20	10	20
CONC.	ROOF T1	IN.	10	10	10	10	10	10	10	10	10	10	10	10	10	10	10	11	10	11	10	11	10	11	10	11	10	13	10	13	10	13	10	13	10	13	11	15	11	15	11	15	11	15	11	15
CONC.	WALLS T2	IN.	8	8	8	8	8	8	8	8	8	8	8	8	8	8	8	10	8	10	8	10	8	10	8	10	8	11	8	11	8	11	8	11	8	11	8	12	8	12	8	12	8	12	8	12
CONC.	INVERT T3	IN.	8	10	8	10	8	10	9½	10½	9½	10½	9½	10½	9½	10½	11	13	11	13	11	13	11	13	11	13	11	15	11	15	11	15	11	15	11	15	12	17	12	17	12	17	12	17	12	17
REINFORCEMENT	"a" BAR SIZE		4	4	4	4	4	4	4	4	4	4	4	4	4	4	5	4	5	4	5	4	5	4	5	4	5	4	5	4	5	4	5	4	5	4	5	5	5	5	5	5	5	5	5	5
REINFORCEMENT	"a" SPACING	IN.	6	6	6	6	6	6	6	6	6	6	6	6	6	6	6	6	6	6	6	6	6	6	6	6	6	6	6	6	6	6	6	6	6	6	6	6	6	6	6	6	6	6	6	6
REINFORCEMENT	"a" LENGTH	ft-in	11-8	11-8	11-8	11-8	11-8	11-8	13-8	13-8	13-8	13-8	13-8	13-8	13-8	13-8	15-8	16-0	15-8	16-0	15-8	16-0	15-8	16-0	15-8	16-0	17-8	18-2	17-8	18-2	17-8	18-2	17-8	18-2	17-8	18-2	21-8	22-4	21-8	22-4	21-8	22-4	21-8	22-4	21-8	22-4
REINFORCEMENT	"b" BAR SIZE		5	5	5	5	5	5	5	5	5	5	5	5	5	4	4	4	4	4	4	4	4	4	4	4	4	4	4	4	4	5	4	5	5	5	5	5	5	5	5	5	5	5	5	5
REINFORCEMENT	"b" SPACING	IN.	12	12	12	12	12	12	12	12	12	12	12	12	12	6	6	6	6	6	6	6	6	6	6	6	6	6	6	6	6	6	6	6	6	6	6	6	6	6	6	6	6	6	6	6
REINFORCEMENT	"b" LENGTH	ft-in	5-9	5-10	6-3	6-4	6-9	6-10	5-10	5-10	6-4	6-4	6-10	6-10	7-4	6-8	5-3	5-6	5-9	6-0	6-3	6-6	6-9	7-0	7-3	7-6	5-9	6-3	6-3	6-9	6-9	7-3	7-3	8-5	7-9	8-11	6-11	7-8	7-5	8-2	7-11	8-8	8-5	9-2	8-11	9-8	9-6	10-2
REINFORCEMENT	"b" B	ft-in	2-8	2-8	2-8	2-8	2-8	2-8	2-8	2-8	2-8	2-8	2-8	2-8	2-8	2-2	2-2	2-4	2-2	2-4	2-2	2-4	2-2	2-4	2-2	2-4	2-2	2-5	2-2	2-5	2-2	2-5	2-2	2-11	2-2	2-11	2-8	2-12	2-8	2-12	2-8	2-12	2-8	2-12	2-8	2-12	2-9	2-12
REINFORCEMENT	"c" BAR SIZE		4	4	4	4	4	4	4	4	4	4	4	4	4	4	4	4	4	4	4	4	4	4	4	4	4	4	4	4	4	4	4	4	5	5	5	5	5	5	5	5	5	5	5	5
REINFORCEMENT	"c" SPACING	IN.	12	12	12	12	12	12	12	12	12	12	12	12	12	12	12	12	12	12	12	12	12	12	12	12	12	12	12	12	12	12	12	12	12	12	12	12	12	12	12	12	12	12	12	12
REINFORCEMENT	"c" LENGTH	ft-in	4-1	4-3	5-1	5-3	6-1	6-3	4-3	4-4	5-3	5-4	6-3	6-4	7-3	7-4	4-4	4-7	5-4	5-7	6-4	6-7	7-4	7-7	8-4	8-7	5-4	5-11	6-4	6-11	7-4	7-11	8-4	8-11	9-4	9-11	6-6	7-3	7-6	8-3	8-6	9-3	9-6	10-3	10-6	11-3	11-6	12-3
REINFORCEMENT	"d" BAR SIZE		5	5	5	5	5	5	5	6	5	6	5	6	5	6	5	6	5	6	5	6	5	6	5	6	6	6	6	6	6	6	6	6	6	6	7	7	7	7	7	7	7	7	7	7
REINFORCEMENT	"d" SPACING	IN.	6	6	6	6	6	6	6	6	6	6	6	6	6	6	6	6	6	6	6	6	6	6	6	6	6	6	6	6	6	6	6	6	6	6	6	6	6	6	6	6	6	6	6	6
REINFORCEMENT	"d" LENGTH	ft-in	11-8	11-8	11-8	11-8	11-8	11-8	13-8	13-8	13-8	13-8	13-8	13-8	13-8	13-8	15-8	16-0	15-8	16-0	15-8	16-0	15-8	16-0	15-8	16-0	17-8	18-2	17-8	18-2	17-8	18-2	17-8	18-2	17-8	18-2	21-8	22-4	21-8	22-4	21-8	22-4	21-8	22-4	21-8	22-4	21-10	22-4
REINFORCEMENT	#5@ 6" LENGTH	ft-in	8-4	8-8	10-4	10-8	12-4	12-8	8-7	8-9	10-7	10-9	12-7	12-9	14-7	14-9	8-10	9-4	10-10	11-4	12-10	13-4	14-10	15-4	16-10	17-4	10-10	12-0	12-10	14-0	14-10	16-0	16-10	18-0	18-10	20-0	13-2	14-8	15-2	16-8	17-2	18-8	19-2	20-8	21-2	22-8	23-2	24-8
REINFORCEMENT	#4@ 12" NUMBER*		70	70	76	76	82	82	78	78	84	84	90	90	96	96	86	86	92	92	98	98	104	104	110	110	100	100	106	106	112	112	118	118	124	124	122	122	128	128	134	134	140	140	146	146	152	152
QUANT.	CONCRETE	CF/LF	24.0	26.0	26.0	28.0	28.0	30.0	28.8	29.9	30.8	31.9	32.8	33.9	34.8	35.9	34.0	39.7	36.0	42.0	38.0	44.3	40.0	46.7	42.0	49.0	39.5	53.2	41.5	55.7	43.5	58.2	45.5	60.7	47.5	63.2	52.2	73.8	54.2	76.4	56.2	79.1	58.2	81.8	60.2	84.4	64.2	87.1
QUANT.	REINFORCEMENT	LB/LF	167	168	177	178	187	188	187	212	197	223	207	233	217	248	234	244	244	255	255	266	266	276	276	287	299	282	309	293	320	303	331	343	342	355	438	456	451	469	464	482	477	495	490	508	506	520

SPAN, "S"		FT.	12														14															
HEIGHT, "H"		FT.	6		7		8		9		10		11		12		7		8		9		10		11		12		13		14	
MAXIMUM EARTH COVER		FT.	10	20	10	20	10	20	10	20	10	20	10	20	10	20	10	20	10	20	10	20	10	20	10	20	10	20	10	20	10	20
CONC.	ROOF T1	IN.	12½	17½	12½	17½	12½	17½	12½	17½	12½	17½	12½	17½	12½	17½	13	19	13	19	13	19	13	19	13	19	13	19	13	19	13	19
CONC.	WALLS T2	IN.	9	14	9	14	9	14	9	14	9	14	9	14	10	14	10	16	10	16	10	16	10	16	10	16	10	16	10	16	11	16
CONC.	INVERT T3	IN.	13	19	13	19	13	19	13	19	13	19	13	19	13	19	15	21	15	21	15	21	15	21	15	21	15	21	15	21	15	21
REINFORCEMENT	"a" BAR SIZE		5	5	5	5	5	5	5	5	5	5	5	5	5	5	6	6	6	6	6	6	6	6	6	6	6	6	6	6	6	6
REINFORCEMENT	"a" SPACING	IN.	6	6	6	6	6	6	6	6	6	6	6	6	6	6	6	6	6	6	6	6	6	6	6	6	6	6	6	6	6	6
REINFORCEMENT	"a" LENGTH	ft-in	25-10	26-8	25-10	26-8	25-10	26-8	25-10	26-8	25-10	26-8	25-10	26-8	26-0	26-8	30-0	31-0	30-0	31-0	30-0	31-0	30-0	31-0	30-0	31-0	30-0	31-0	30-0	31-0	30-2	31-0
REINFORCEMENT	"b" BAR SIZE		5	6	5	6	5	6	5	6	5	6	6	6	6	6	5	6	5	6	6	6	6	6	6	6	6	6	6	6	6	6
REINFORCEMENT	"b" SPACING	IN.	6	6	6	6	6	6	6	6	6	6	6	6	6	6	6	6	6	6	6	6	6	6	6	6	6	6	6	6	6	6
REINFORCEMENT	"b" LENGTH	ft-in	7-8	9-2	8-2	9-8	8-8	10-2	9-2	10-8	9-8	11-2	10-9	11-8	11-4	12-2	8-4	9-11	8-10	10-5	9-11	10-11	10-5	11-5	10-11	11-11	11-5	12-5	11-11	12-11	12-6	13-5
REINFORCEMENT	"b" B	ft-in	2-9	3-7	2-9	3-7	2-9	3-7	2-9	3-7	2-9	3-7	3-2	3-7	3-3	3-7	2-10	3-9	2-10	3-9	3-3	3-9	3-3	3-9	3-3	3-9	3-3	3-9	3-3	3-9	3-4	3-9
REINFORCEMENT	"c" BAR SIZE		6	6	6	6	6	6	6	6	6	6	6	6	6	6	5	6	5	6	5	6	5	6	5	6	5	6	4	6	4	6
REINFORCEMENT	"c" SPACING	IN.	12	12	12	12	12	12	12	12	12	12	12	12	12	12	12	12	12	12	12	12	12	12	12	12	12	12	6	12	6	12
REINFORCEMENT	"c" LENGTH	ft-in	7-9	8-8	8-9	9-8	9-9	10-8	10-9	11-8	11-9	12-8	12-9	13-8	13-9	14-8	8-11	9-11	9-11	10-11	10-11	11-11	11-11	12-11	12-11	13-11	13-11	14-11	14-11	15-11	15-11	16-11
REINFORCEMENT	"d" BAR SIZE		8	8	8	8	8	8	8	8	8	8	8	8	8	8	8	9	8	9	8	9	8	9	8	9	8	9	8	9	8	9
REINFORCEMENT	"d" SPACING	IN.	6	6	6	6	6	6	6	6	6	6	6	6	6	6	6	6	6	6	6	6	6	6	6	6	6	6	6	6	6	6
REINFORCEMENT	"d" LENGTH	ft-in	25-10	26-8	25-10	26-8	25-10	26-8	25-10	26-8	25-10	26-8	25-10	26-8	26-0	26-8	30-0	31-0	30-0	31-0	30-0	31-0	30-0	31-0	30-0	31-0	30-8	31-0	30-0	31-0	30-2	31-0
REINFORCEMENT	#4@ 6" LENGTH	ft-in	15-7	17-5	17-7	19-5	19-7	21-5	21-7	23-5	23-7	25-5	25-7	27-5	27-7	29-5	18-0	20-0	20-0	22-0	22-0	24-0	24-0	26-0	26-0	28-0	28-0	30-0	30-0	32-0	32-0	34-0
REINFORCEMENT	#4@ 12" NUMBER*		144	144	150	150	156	156	162	162	168	168	174	174	180	180	166	166	172	172	178	178	184	184	190	190	196	196	202	202	208	208
QUANT.	CONCRETE	CF/LF	68.6	100.1	70.8	103.1	72.9	106.1	75.1	109.1	77.3	112.1	79.4	115.1	84.0	118.1	87.1	127.8	89.4	131.1	91.8	134.4	94.1	137.8	96.4	141.1	98.8	144.1	101.1	147.8	106.2	151.1
QUANT.	REINFORCEMENT	LB/LF	587	651	601	667	615	683	629	698	643	714	702	730	721	745	724	895	736	910	791	926	806	942	821	958	836	973	859	989	878	1005

* QUANTITY INCLUDES #4 CORNER BARS

NOTES:

1. DESIGN SPECIFICATIONS: "AASHTO LRFD BRIDGE DESIGN SPECIFICATIONS 2012"

2. CONSTRUCTION SPECIFICATIONS: "STATE OF NEVADA DEPARTMENT OF TRANSPORTATION STANDARD SPECIFICATIONS FOR ROAD AND BRIDGE CONSTRUCTION 2014"

3. LIVE LOADS:
   HL-93 DESIGN TRUCK (32.0 KIP AXLE)
   HL-93 DESIGN TANDEM (TWO 25.0 KIP AXLES SPACED 4 FT. APART)
   (LIVE LOAD IMPACT FACTOR FOR TOP SLAB IS 33% UP TO 2 FT. OF COVER)

   LATERAL LIVE LOAD PRESSURE:
   EQUIVALENT TO 2 FT. OF EARTH SURCHARGE APPLIED HORIZONTALLY.
   =240 PSF

   DEAD LOADS:
   SOIL UNIT WEIGHT = 120 PCF
   MIN LATERAL EARTH PRESSURE = 30 PCF
   MAX LATERAL EARTH PRESSURE = 60 PCF

4. CONCRETE: CLASS DA MODIFIED (MAJOR)
   F'C=4,500 PSI @ 28 DAYS.
   (CLASS D IN CLARK COUNTY)

5. REINFORCING STEEL: ALL REINFORCING STEEL TO BE ASTM A615. DIMENSION RELATING TO BAR SPACING ARE CENTER TO CENTER

6. DESIGNATION: BOX CULVERTS ARE SHOWN ON PLANS AS SPAN TIMES HEIGHT TIMES LENGTH (10' x 8' x 196' RCB).

7. WHERE TRAFFIC LOADS WILL BE PLACED DIRECTLY ON THE TOP SURFACE OF THE CULVERT, (AND/OR UP TO 2 FT OF FILL), INCREASE TOP SLAB THICKNESS BY ½" AND COVER FOR TOP REINFORCEMENT FROM 2" TO 2½". PROVIDE EPOXY COATED REINFORCEMENT IN TOP SLAB (EXCEPT IN CLARK COUNTY). DECREASE SPACING OF TOP SLAB BOTTOM LONGITUDINAL BARS (#4 @ 12) TO 6" SPACING. USE EA MODIFIED MAJOR CONCRETE (CLASS E IN CLARK COUNTY) IN LIEU OF CLASS DA. ADJUST QUANTITIES ACCORDINGLY.

8. PROVIDE 2'-0" WIDE TYPE 1 OR TYPE 2 DRAIN BACKFILL WRAPPED IN CLASS 1 OR CLASS 2 NON-WOVEN GEOTEXTILE ALONG FULL HEIGHT OF EACH CULVERT EXTERIOR WALL FACE.

9. PROVIDE PAVING NOTCH WHEN TOP SLAB IS EXPOSED AND WHEN PAVEMENT IS CONCRETE. ADJUST QUANTITIES ACCORDINGLY.

10. FOR GENERAL NOTES, SEE SHEET B-20.1.1

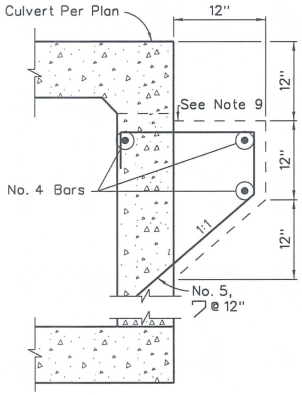

PAVING NOTCH DETAIL

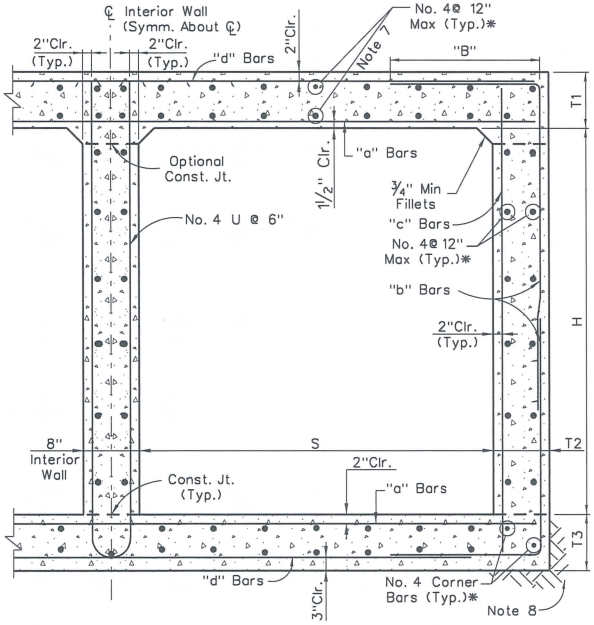

TYPICAL SECTION

(Not to scale)

BENT BARS

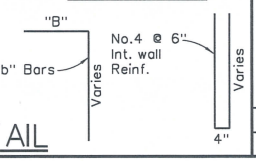

NEVADA DEPARTMENT OF TRANSPORTATION

DOUBLE RCB CULVERTS

Signed Original On File	B-20.1.3	
CHIEF BRIDGE ENGINEER	ADOPTED 01/28/15	REVISION 01/27/15

Standard Plans Change Request

Requests for modifying the Standard Plans for Road and Bridge Construction must be submitted to:

NDOT Specifications Division
Attn: Standards and Manuals Supervisor
1263 South Stewart Street
Carson City, Nevada 89712

Standard Sheet No.: B-20.1.3.2 Page No.: B-4 Note: A separate form is required for each change.

Description of requested modification or correction: Replaced entire sheet with new design. (Please attach supporting information).

Reason for request: RCB designs have been updated for new design requirements.

Requestor Information: Name: Troy Martin Phone: 888-7380

==========

For Standards/Manuals Personnel Only: ☐ Approved ☐ Denied

Revised by: Signature: _____ Date: _____

Policy Review:
☐ CADD Standards ☐ ASTM ☐ AASHTO ☐ Design Manual ☐ Specifications

Reviewed by: Signature: _____ Date: _____

Notes:

SPAN, "S"	FT.	5						6								7										8										10											
HEIGHT, "H"	FT.	3		4		5		3		4		5		6		3		4		5		6		7		4		5		6		7		8		5		6		7		8		9		10	
MAXIMUM EARTH COVER	FT.	10	20	10	20	10	20	10	20	10	20	10	20	10	20	10	20	10	20	10	20	10	20	10	20	10	20	10	20	10	20	10	20	10	20	10	20	10	20	10	20	10	20	10	20	10	20
QUANT. CONCRETE	CF/LF	10.5	11.4	11.2	12.1	11.8	12.8	12.8	13.4	13.5	14.1	14.2	14.7	14.8	15.4	15.4	17.3	16.1	18.0	16.8	18.7	17.4	19.3	18.1	20.0	17.8	22.9	18.5	23.6	19.2	24.2	19.8	24.9	20.5	25.6	23.8	31.8	24.4	32.4	25.1	33.1	25.8	33.8	26.4	34.4	27.1	35.1
QUANT. REINFORCEMENT	LB/LF	116	117	120	121	124	125	134	159	138	163	142	167	146	171	175	181	179	185	183	189	187	193	191	192	206	207	210	211	214	215	218	245	222	249	331	333	335	337	339	341	343	395	347	349	351	353

SPAN, "S"	FT.	12														14															
HEIGHT, "H"	FT.	6		7		8		9		10		11		12		7		8		9		10		11		12		13		14	
MAXIMUM EARTH COVER	FT.	10	20	10	20	10	20	10	20	10	20	10	20	10	20	10	20	10	20	10	20	10	20	10	20	10	20	10	20	10	20
QUANT. CONCRETE	CF/LF	30.9	42.5	31.6	43.2	32.3	43.9	32.9	44.5	33.6	45.2	34.3	45.9	34.9	46.5	38.9	53.6	39.6	54.2	40.2	54.9	40.9	55.6	41.6	56.2	42.2	56.9	42.9	57.6	43.6	58.2
QUANT. REINFORCEMENT	LB/LF	457	506	461	510	465	514	496	518	473	522	523	526	527	530	583	671	587	675	591	679	595	683	599	687	603	691	607	695	611	699

QUANTITIES ARE FOR EACH ADDITIONAL INTERIOR CELL BEYOND DOUBLE RCB CULVERT.

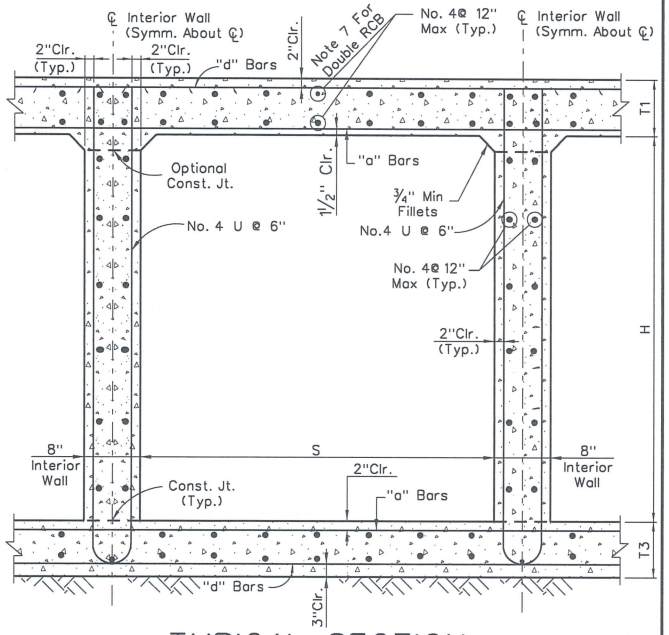

TYPICAL SECTION

(Not To Scale)

NOTES:

1. NOTES 1 THRU 10 OF "DOUBLE RCB CULVERTS" SHEET SHALL APPLY.

2. WHEN THE ADDITION OF CELLS CAUSES THE LENGTHS OF THE "a" AND "d" BARS TO EXCEED 60 FFET, THE BARS WILL REQUIRE SPLICING. SPLICES FOR THE "d" BARS SHALL NOT BE CENTERED ABOUT THE CENTERLINE OF THE INTERIOR WALLS. SPLICES FOR THE "a" BARS SHALL NOT BE DONE AT WITHIN THE MIDDLE THIRD OF A SPAN. SPLICE LENGTHS FOR THE "a" AND "d" BARS SHALL BE AS FOLLOWS:
   - NO. 4 BARS - 21 INCHES
   - NO. 5 BARS - 26 INCHES
   - NO. 6 BARS - 31 INCHES
   - NO. 7 BARS - 36 INCHES
   - NO. 8 BARS - 48 INCHES
   - NO. 9 BARS - 60 INCHES

3. FOR DIMENSIONS, BAR SIZES, BAR SPACING, SEE DETAIL ON "DOUBLE RCB CULVERTS" SHEET.

NEVADA DEPARTMENT OF TRANSPORTATION

ADDITIONAL CELLS TO BE USED WITH DOUBLE RCB CULVERTS TO PROVIDE FOR MULTIPLE CELL CULVERTS

Signed Original On File	B-20.1.3.2	
CHIEF BRIDGE ENGINEER	ADOPTED 01/28/15	REVISION 01/27/15

Standard Plans Change Request

Requests for modifying the Standard Plans for Road and Bridge Construction must be submitted to:

NDOT Specifications Division
Attn: Standards and Manuals Supervisor
1263 South Stewart Street
Carson City, Nevada 89712

Standard Sheet No.: B-20.1.3.1 Page No.: B-5 Note: A separate form is required for each change.

Description of requested modification or correction: ~~Delete sheet~~. UPDATE NOTES

(Please attach supporting information).

Reason for request: New RCB tables fit on previous sheet.

Requestor Information: Name: Troy Martin Phone: 888-7380

==========

For Standards/Manuals Personnel Only: ☐ Approved ☐ Denied

Revised by: Signature: _____ Date: _____

Policy Review:
☐ CADD Standards ☐ ASTM ☐ AASHTO ☐ Design Manual ☐ Specifications

Reviewed by: Signature: _____ Date: _____

Notes:

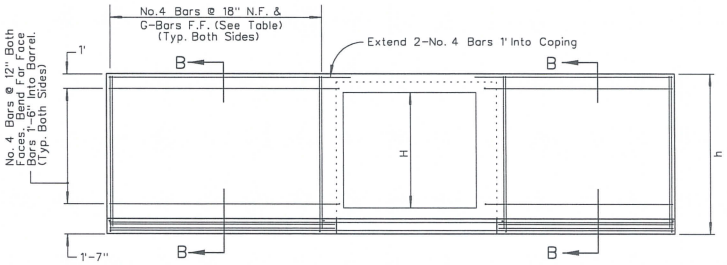

ELEVATION

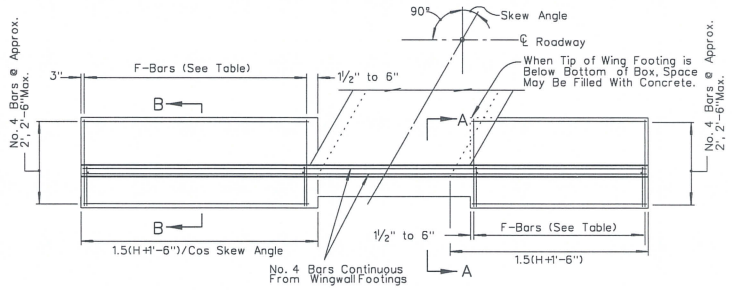

WING B

WING A

PLAN

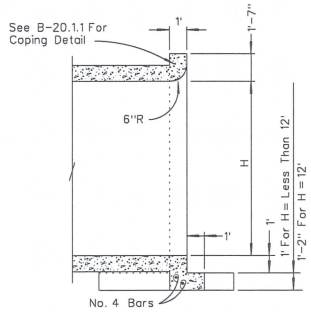

SECTION A-A

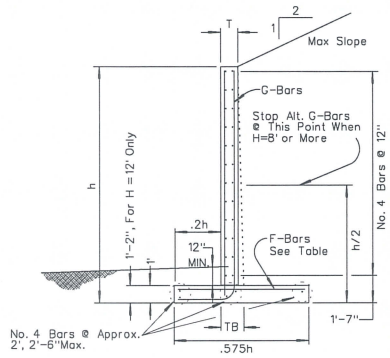

SECTION B-B

NOTES:

1. FOR GENERAL NOTES SEE SHEET B-20.1.1.
2. FOR QUANTITIES SEE SHEET B-20.1.4.1
3. TYPE II HEADWALLS DESIGNED FOR 60 PCF EQUIVALENT FLUID PRESSURE AND 2:1 (HORIZONTAL TO VERTICAL) FILL SLOPE. DESIGN SPECIFICATIONS "AASHTO LRFD BRIDGE DESIGN SPECIFICATIONS, 2012"

TABLE

H = HEIGHT FEET	T = INCHES	TB = INCHES	G-BARS		F-BARS	
			SIZE NO.	SPACE INCHES	SIZE NO.	SPACE INCHES
3	8	8	5	9 1/2	4	12
4	8	8	5	9 1/2	4	12
5	9	9	6	9 1/2	4	11
6	10	10	7	10	4	6 1/2
7	12	12	7	8 1/2	5	7 1/2
8	12	13	7	6 1/2	6	8
9	12	14	7	7	6	7 1/2
10	12	16	8	6 1/2	8	10
12	12	20	9	7	8	8 1/2

SHEET 1 OF 2

NEVADA DEPARTMENT OF TRANSPORTATION

RCB CULVERTS
TYPE II HEADWALLS

Signed Original On File	B-20.1.4	(502,505)
CHIEF BRIDGE ENGINEER	ADOPTED 11/70	REVISION 3/15

Standard Plans Change Request

Requests for modifying the Standard Plans for Road and Bridge Construction must be submitted to:

NDOT Specifications Division
Attn: Standards and Manuals Supervisor
1263 South Stewart Street
Carson City, Nevada 89712

Standard Sheet No.: B-20.1.3.2 Page No.: B-6 Note: A separate form is required for each change.

Description of requested modification or correction: Replaced entire sheet with new design. Renumber sheet B-20.1.3.1. .

(Please attach supporting information).

Reason for request: RCB designs have been updated for new design requirements.

Requestor Information: Name: Troy Martin Phone: 888-7380

==========

For Standards/Manuals Personnel Only: ☐ Approved ☐ Denied

Revised by: Signature: _____ Date: _____

Policy Review:
☐ CADD Standards ☐ ASTM ☐ AASHTO ☐ Design Manual ☐ Specifications

Reviewed by: Signature: _____ Date: _____

Notes:

① - QUANTITIES SHOWN ARE FOR TWO HEADWALLS AT THE INLET AND OUTLET

CUBIC YARDS OF CONCRETE AND POUNDS OF REINFORCING FOR TWO TYPE II HEADWALLS ①

SPAN	HEIGHT	SINGLE BOX 0° SKEW CONC.	SINGLE BOX 0° SKEW REINF.	SINGLE BOX 15° SKEW CONC.	SINGLE BOX 15° SKEW REINF.	SINGLE BOX 30° SKEW CONC.	SINGLE BOX 30° SKEW REINF.	SINGLE BOX 45° SKEW CONC.	SINGLE BOX 45° SKEW REINF.	DOUBLE BOX 0° SKEW CONC.	DOUBLE BOX 0° SKEW REINF.	DOUBLE BOX 15° SKEW CONC.	DOUBLE BOX 15° SKEW REINF.	DOUBLE BOX 30° SKEW CONC.	DOUBLE BOX 30° SKEW REINF.	DOUBLE BOX 45° SKEW CONC.	DOUBLE BOX 45° SKEW REINF.	TRIPLE BOX 0° SKEW CONC.	TRIPLE BOX 0° SKEW REINF.	TRIPLE BOX 15° SKEW CONC.	TRIPLE BOX 15° SKEW REINF.	TRIPLE BOX 30° SKEW CONC.	TRIPLE BOX 30° SKEW REINF.	TRIPLE BOX 45° SKEW		HEIGHT	SPAN
5	3	9.4	871	9.4	888	10.2	947	11.5	1073	11.4	991	11.6	1013	12.4	1085	14.3	1243									3	5
	4	12.8	1141	12.8	1163	13.5	1237	15.6	1399	14.8	1261	15.0	1287	15.9	1376	18.6	1568	16.8	1367	17.0	1397	18.5	1498	21.4	1718	4	
	5	16.4	1676	16.6	1707	17.5	1813	19.8	2044	18.6	1795	18.6	1831	19.9	1952	22.8	2214	20.6	1901	20.8	1941	22.3	2074	25.6	2364	5	
6	3	9.8	886	9.8	903	10.6	963	12.1	1094	12.2	1094	12.2	1119	13.2	1204	15.3	1389									3	6
	4	13.2	1155	13.2	1178	14.1	1254	16.2	1419	15.4	1364	15.6	1393	16.7	1495	19.4	1714	17.8	1536	18.0	1572	19.5	1693	22.8	1957	4	
	5	16.8	1690	17.8	1722	18.9	1830	20.5	2064	20.0	1898	20.4	1937	21.7	2071	24.8	2360	22.4	2070	22.8	2116	24.5	2269	28.2	2603	5	
	6	25.8	2598	26.1	2646	27.6	2808	31.1	3160	27.8	2806	28.5	2861	30.2	3049	34.5	3456	30.4	2978	31.1	3040	33.0	3247	38.3	3699	6	
	7	32.0	3666	32.3	3733	34.2	3960	38.6	4453																	7	
7	3	10.2	900	10.2	918	11.0	980	12.5	1114																	3	7
	4	13.6	1170	13.6	1193	14.5	1270	16.6	1439																	4	
	5	17.2	1704	17.3	1736	19.3	1846	20.9	2085																	5	
	6	26.2	2612	26.3	2660	28.0	2824	31.7	3181																	6	
	7	32.2	3682	32.7	3750	34.6	3978	39.0	4485																	7	
8	3	10.6	914	10.6	933	11.4	996	13.1	1134	13.8	1296	14.0	1328	15.2	1437	17.1	1675									3	8
	4	14.0	1184	14.0	1207	14.9	1287	17.0	1460	17.0	1566	17.2	1602	18.5	1728	21.6	2000	20.2	1830	20.4	1876	24.1	2033	26.0	2373	4	
	5	17.6	1718	17.7	1751	18.8	1863	21.3	2105	20.8	2100	20.9	2146	22.6	2304	25.9	2646	24.8	2364	25.1	2420	27.0	2609	31.5	3019	5	
	6	26.4	2626	26.7	2675	28.4	2841	32.1	3201	29.2	3008	29.9	3070	31.8	3282	36.3	3742	32.4	3272	33.1	3344	35.4	3587	40.9	4115	6	
	7	32.8	3697	33.0	3765	34.9	3995	39.3	4496	35.8	4067	36.2	4147	38.5	4422	43.7	5019	39.0	4331	39.6	4421	42.3	4727	48.3	5392	7	
	8	40.4	4979	40.8	5070	43.3	5377	18.8	6046	43.8	5332	44.2	5434	47.1	5785	53.3	6546	47.0	5596	47.6	5708	50.9	6190	57.9	6919	8	
10	3	11.4	943	11.4	962	12.5	1029	14.3	1174	14.8	1604	15.0	1648	16.3	1793	18.9	2110									3	10
	4	14.6	1212	14.7	1237	15.8	1320	18.1	1500	18.2	1874	18.3	1922	19.8	2084	24.1	2435									4	
	5	18.4	1747	18.5	1781	19.8	1895	22.5	2145	20.4	2408	22.0	2466	23.9	2660	26.8	3081	25.6	2836	25.9	2909	28.2	3154	32.9	3686	5	
	6	27.0	2655	27.2	2705	28.9	2874	32.8	3241	30.4	3316	31.2	3390	33.1	3638	38.0	4117	34.1	3744	35.0	3833	37.5	4132	43.4	4782	6	
	7	33.4	3729	33.8	3799	36.1	4033	40.9	4542	37.2	4375	37.6	4467	40.1	4778	45.7	5454	41.0	4803	41.6	4910	44.5	5272	51.1	6059	7	
	8	41.2	5015	41.5	5107	44.0	5419	48.6	6097	44.4	5640	44.7	5724	47.8	6141	54.2	6981	48.4	6068	48.9	6197	52.2	6635	59.8	7586	8	
	9	49.8	5687	50.2	5791	53.1	6144	59.6	6909																	9	
	10	61.0	8535	61.4	8690	65.2	9216	73.2	10358	65.2	9109	65.8	9285	70.2	9878	79.2	11169	69.6	9537	70.4	9728	75.2	10372	85.4	11774	10	
12	4	15.4	1241	15.5	1266	16.6	1356	19.1	1540	19.6	2290	19.9	2352	21.4	2564	24.9	3023									4	12
	5	18.8	1775	18.9	1810	20.2	1929	22.9	2185	23.0	2824	23.1	2896	25.0	3140	28.9	3669									5	
	6	28.0	2683	28.2	2734	29.9	2908	33.9	3281	32.2	3732	33.6	3820	35.1	4118	40.1	4766	36.8	4381	37.4	4492	40.3	4867	46.7	5683	6	
	7	34.2	3761	33.8	3831	36.5	4069	41.3	4586	38.4	4791	39.0	4897	41.6	5258	47.5	6042	43.0	5440	43.8	5569	47.0	6007	54.1	6960	7	
	8	42.0	5050	42.1	5143	44.8	5459	50.6	6147	46.6	6056	46.9	6140	50.2	6621	56.0	7569	51.2	6705	51.7	6856	55.6	7370	63.6	8487	8	
	9	50.4	5722	50.8	5828	53.8	6187	60.6	6959	55.2	6728	55.8	6869	59.4	7346	67.4	8381	60.0	7377	60.8	7541	65.0	8095	74.2	9299	9	
	10	61.8	8580	62.3	8736	65.9	9267	74.3	10421	66.6	9525	67.1	9715	71.7	10358	81.1	11757	71.4	10174	72.3	10387	77.5	11107	88.1	12675	10	
	12	88.0	12939	88.8	13172	94.0	13963	105.7	15682	93.2	13884	94.2	14150	99.8	15054	113.1	17018	98.0	14533	99.2	14822	105.6	15803	119.4	17936	12	

QUANTITIES FOR ADDITIONAL CELLS

CONCRETE FOR TWO TYPE II HEADWALLS FOR EACH ADDITIONAL CELL (CU. YARDS) (ADD THIS QUANTITY TO THE QUANTITY FOR A DOUBLE BOX)

FOR HEIGHT(H) LESS THAN 12ft.
[8.56ft^2 (SPAN(ft)+0.67ft)]/COS SKEW ANGLE

FOR HEIGHT(H) EQUAL TO OR GREATER THAN 12ft.
[9.23ft^2 (SPAN(ft)+0.67ft)]/COS SKEW ANGLE

REINFORCING FOR TWO TYPE II HEADWALLS FOR EACH ADDITIONAL CELL (POUNDS) (ADD THIS QUANTITY TO THE QUANTITY FOR A DOUBLE BOX)

FOR HEIGHT(H) LESS THAN OR EQUAL TO 7ft.
[16.69lb/ft(SPAN(ft)+0.67ft)]/COS SKEW ANGLE

FOR HEIGHT(H) EQUAL TO 8ft OR 9ft.
[24.03lb/ft(SPAN(ft)+0.67ft)]/COS SKEW ANGLE

FOR HEIGHT(H) EQUAL TO OR GREATER THAN 10ft.
[42.72lb/ft(SPAN(ft)+0.67ft)]/COS SKEW ANGLE

ANGLE	COSINE
0°	1.0000
15°	0.9659
30°	0.8660
45°	0.7071

SHEET 2 OF 2

NEVADA DEPARTMENT OF TRANSPORTATION

RCB CULVERTS
TYPE II HEADWALLS

Signed Original On File
CHIEF BRIDGE ENGINEER

B-20.1.4.1 (502,505)
ADOPTED 11/70 REVISION 10/00

Standard Plans Change Request

Requests for modifying the Standard Plans for Road and Bridge Construction must be submitted to:

NDOT Specifications Division
Attn: Standards and Manuals Supervisor
1263 South Stewart Street
Carson City, Nevada 89712

Standard Sheet No.: B-20.1.4 Page No.: B-7 Note: A separate form is required for each change.

Description of requested modification or correction: Updated notes. ..... (Please attach supporting information).

Reason for request: Headwall designs have been checked for new design requirements. .....

Requestor Information: Name: Troy Martin Phone: 888-7380

==========

For Standards/Manuals Personnel Only: ☐ Approved ☐ Denied

Revised by: Signature: _____ Date: _____

Policy Review:
☐ CADD Standards ☐ ASTM ☐ AASHTO ☐ Design Manual ☐ Specifications

Reviewed by: Signature: _____ Date: _____

Notes: .....

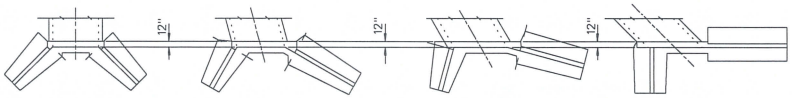

0° SKEW 15° SKEW 30° SKEW 45° SKEW

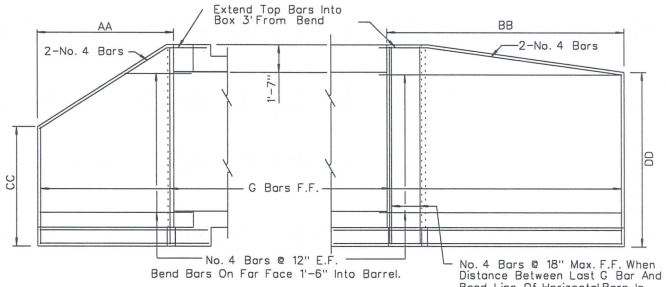

NOTE: For Boxes With 0° Skew Both Wings Are As Shown For Wing A.

SECTION WING A

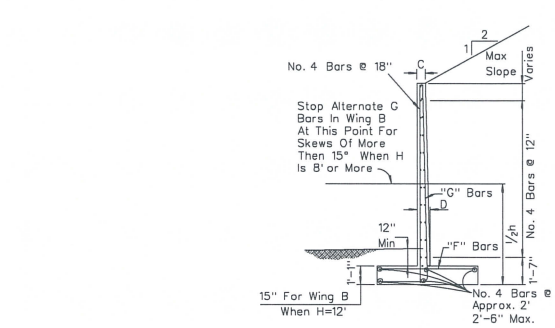

SECTION WING B

SECTION OF WINGS A AND B

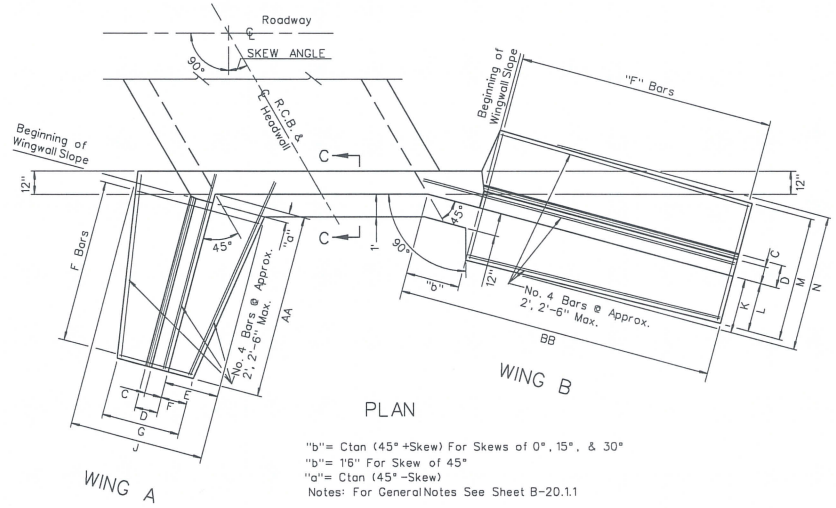

PLAN

"b"= Ctan (45° +Skew) For Skews of 0°, 15°, & 30°
"b"= 1'6" For Skew of 45°
"a"= Ctan (45° -Skew)
Notes: For General Notes See Sheet B-20.1.1

TYPE 1 HEADWALLS DESIGNED FOR 36 PCF EQUIVALANT FLUID PRESSURE AND 2:1 (HORIZONTAL TO VERTICAL) FILL SLOPE.
SPECIFICATIONS: "AASHTO LRFD BRIDGE DESIGN SPECIFICATIONS, 2012"

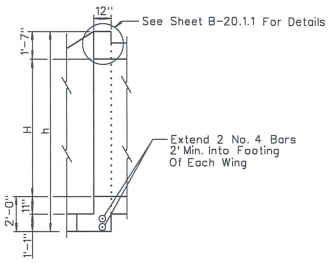

SECTION C-C

SHEET 1 OF 2

NEVADA DEPARTMENT OF TRANSPORTATION

RCB CULVERTS
TYPE I HEADWALLS

Signed Original On File	B-20.1.5	(502)
CHIEF BRIDGE ENGINEER	ADOPTED 11/70	REVISION 3/15

TYPE I HEADWALL DIMENSIONS AND REINFORCING STEEL

H=Height In Feet	h= All Wings Except B For 45° Skew	0° SKEW							WINGS A&B				15° SKEW											WING A				WING B				H=Height In Feet
									G BARS		F BARS													G BARS		F BARS		G BARS		F BARS		
		AA & BB	CC & DD	C & D	E & K	F & L	G & M	J & N	SIZE	SPACING	SIZE	SPACING	AA	BB	CC	DD	C	D	E & K	F	G	J & N	L	M	SIZE	SPACING	SIZE	SPACING	SIZE	SPACING	SIZE	SPACING	
3	6-7	4	4-2	8	1-4	0-10	2-1	3-4	4	12	4	12	3-7	4-8	4-11	5-7	8	8	1-4	1	2-6	3-4	1-2	2-10	4	12	4	12	4	12	4	12	3
4	7-7	5	5-8	8	1-6	1-2	2-10	3-10	4	12	4	12	4-6	5-11	5-4	6-2	8	8	1-6	1-1	2-8	3-10	1-3	3-1	4	12	4	12	4	12	4	12	4
5	8-7	6-2	6-2	8	1-9	1-3	3-1	4-4	4	12	4	12	5-6	7-2	5-9	6-9	8	8	1-9	1-2	2-11	4-4	1-4	3-5	4	12	4	12	4	10	4	12	5
6	9-7	7-2	6-8	8	1-11	1-4	3-4	4-10	4	10½	4	12	6-5	8-5	6-3	7-4	8	8	1-11	1-3	3-2	4-10	1-6	3-8	4	12	4	12	4	6½	4	12	6
7	10-7	8-4	7-3	8	2-2	1-6	3-8	5-4	4	7	4	12	7-6	9-9	6-9	8	8	8	2-2	1-4	3-5	5-4	1-7	4	4	8½	4	12	6	10	4	12	7
8	11-7	9-4	7-9	8	2-4	1-7	3-11	5-10	6	10½	4	11	8-5	11	7-2	8-7	9	9	2-4	1-5	3-7	5-10	1-8	4-4	6	12	4	12	6	8	4	9½	8
9	12-7	10-5	8-3	9	2-6	1-8	4-2	6-4	6	9	4	9	9-4	12-3	7-7	9-2	9	10	2-6	1-6	3-10	6-4	1-10	4-7	6	10	4	10	7	9	4	8	9
10	13-7	11-6	8-10	10	2-9	1-9	4-5	6-10	6	7½	4	6½	10-4	13-6	8-1	9-11	9	12	2-9	1-7	4-1	6-10	2	5	6	8	4	8½	7	7½	4	6	10
12	15-7	13-7	9-11	12	3-2	2	5	7-10	7	7	5	6½	12-3	15-11	9-1	11-4	11	15	3-2	1-10	4-7	7-10	2-3	5-8	7	7½	5	6½	7	6	5	6	12

H=Height In Feet	h= All Wings Except B For 45° Skew	30° SKEW											WING A				WING B				45° SKEW										WING B		WING A				WING B				H=Height In Feet
													G BARS		F BARS		G BARS		F BARS														G BARS		F BARS		G BARS		F BARS		
		AA	BB	CC	DD	C	D	E & K	F	G	J & N	L	M	SIZE	SPACING	SIZE	SPACING	SIZE	SPACING	SIZE	SPACING	AA	BB	CC	DD	C	D	E & K & L	F	G	J & M & N	h	DD	SIZE	SPACING	SIZE	SPACING	SIZE	SPACING	SIZE	SPACING	
3	6-7	3-4	5-10	4-8	6-2	8	8	1-4	0-11	2-4	3-4	1-3	3-4	4	12	4	12	4	12	4	12	3-4	8-4	4-7	6-7	8	8	1-4	0-11	2-4	3-4	6-7	6-7	4	12	4	12	4	12	4	12	3
4	7-7	4-3	7-5	5-2	6-11	8	8	1-6	1	2-7	3-10	1-6	3-10	4	12	4	12	4	8½	4	12	4-2	10-5	5	7-7	8	8	1-6	1	2-6	3-10	7-7	7-7	4	12	4	12	5	9½	4	12	4
5	8-7	5-2	8-11	5-6	7-8	8	8	1-9	1-1	2-9	4-4	1-9	4-4	4	12	4	12	4	6½	4	12	5-1	12-7	5-5	8-7	9	9	1-9	1-1	2-9	4-4	8-7	8-7	4	12	4	12	6	9½	4	11	5
6	9-7	6-1	10-6	5-11	8-4	8	8	1-11	1-2	3	4-10	1-8	4-10	4	12	4	12	6	12	4	12	5-11	14-8	5-10	9-7	10	10	1-11	1-2	2-11	4-10	9-7	9-7	4	12	4	12	7	10	4	6½	6
7	10-7	7	12-2	6-5	9-3	9	9	2-2	1-4	3-3	5-4	1-10	5-4	4	10½	4	12	6	8½	4	10½	6-11	17	6-3	10-7	12	12	2-2	1-3	3-2	5-4	10-7	10-7	4	10½	4	12	7	8½	5	7½	7
8	11-7	7-11	13-9	6-10	10	9	9	2-4	1-5	3-5	5-10	2-4	5-10	4	6	4	12	6	7	4	7½	7-9	19-1	6-8	11-7	12	12	2-4	1-4	3-4	5-10	11-7	11-7	4	7	4	12	7	6½	6	8	8
9	12-7	8-10	15-3	7-3	10-9	9	12	2-6	1-6	3-8	6-4	2-6	6-4	5	7½	4	9	7	8	5	7	8-7	21-2	7-1	12-7	9	14	2-6	1-5	3-7	6-4	12-7	12-7	5	8	4	10	7	6	6	7½	9
10	13-7	9-9	16-10	7-8	11-7	9	13	2-9	1-7	3-10	6-10	2-9	6-10	6	9	4	7½	7	6½	6	7½	9-6	23-4	7-6	13-7	9	16	2-9	1-6	3-9	6-10	13-7	13-7	6	9½	4	7½	8	6½	8	10	10
12	15-7	11-6	19-11	8-7	13-3	11	16	3-2	1-9	4-4	7-10	3-2	7-10	7	9	5	7½	8	6½	6	7½	11-3	27-7	8-6	15-9	11	20	3-2	1-8	4-2	7-10	15-9	15-9	7	9	5	7	9	7	8	8½	12

SHEET 2 OF 2

NEVADA DEPARTMENT OF TRANSPORTATION

RCB CULVERTS
TYPE I HEADWALLS

Signed Original On File
CHIEF BRIDGE ENGINEER

B-20.1.5.1 (502)
ADOPTED 11/70 REVISION 3/15

Standard Plans Change Request

Requests for modifying the Standard Plans for Road and Bridge Construction must be submitted to:

NDOT Specifications Division
Attn: Standards and Manuals Supervisor
1263 South Stewart Street
Carson City, Nevada 89712

Standard Sheet No.: B-20.1.5 Page No.: B-9 Note: A separate form is required for each change.

Description of requested modification or correction: Updated notes. ..... (Please attach supporting information).

Reason for request: Headwall designs have been checked for new design requirements. .....

Requestor Information: Name: Troy Martin Phone: 888-7380

==========

For Standards/Manuals Personnel Only: ☐ Approved ☐ Denied

Revised by: Signature: _____ Date: _____

Policy Review:
☐ CADD Standards ☐ ASTM ☐ AASHTO ☐ Design Manual ☐ Specifications

Reviewed by: Signature: _____ Date: _____

Notes: .....

CUBIC YARDS OF CONCRETE AND POUNDS OF REINFORCING FOR TWO TYPE I HEADWALLS (1)

SPAN	HEIGHT	SINGLE BOX								DOUBLE BOX								TRIPLE BOX							
		0° SKEW		15° SKEW		30° SKEW		45° SKEW		0° SKEW		15° SKEW		30° SKEW		45° SKEW									
		CONC.	REINF.	CONC.	REINF.	CONC.	REINF.	CONC.	REINF.	CONC.	REINF.	CONC.	REINF.	CONC.	REINF.	CONC.	REINF.	CONC.	REINF.	CONC.	REINF.	CONC.	REINF.	CONC.	REINF.
5	3	5.6	393	6.4	476	7.2	563	8.9	739	7.7	508	8.5	597	9.5	700	11.8	910								
	4	7.6	609	8.0	644	9.6	774	11.6	946	9.7	726	10.1	767	12.0	912	14.6	1119	11.8	842	12.3	886	14.4	1045	17.6	1280
	5	9.6	705	10.2	782	11.8	942	15.0	1238	11.7	825	12.4	908	14.3	1085	18.0	1414	13.9	944	14.6	1030	16.8	1220	21.0	1578
6	3	6.0	418	6.8	504	7.6	595	9.4	779	8.3	600	9.2	699	10.3	817	12.7	1062								
	4	7.9	637	8.3	673	10.0	807	12.1	985	10.3	821	10.8	869	12.7	1032	15.5	1270	12.6	1004	13.2	1058	15.4	1243	18.8	1525
	5	9.9	730	10.6	809	12.2	974	15.4	1278	12.3	917	13.0	1009	15.0	1203	18.8	1566	14.7	1103	15.5	1199	17.7	1413	22.1	1823
	6	12.4	983	12.6	1106	15.5	1505	20.4	2158	14.8	1173	15.0	1310	18.3	1740	23.7	2449	17.2	1361	17.5	1502	21.0	1951	27.1	2708
	7	15.3	1400	16.0	1601	19.8	2155	26.5	3104																
7	3	6.3	442	7.1	532	8.0	626	9.9	820																
	4	8.3	665	8.7	702	10.4	839	12.6	1025																
	5	10.3	756	10.9	837	12.6	1006	15.9	1319																
	6	12.8	1011	12.9	1137	15.9	1544	20.8	2209																
	7	15.6	1432	16.3	1637	20.2	2199	27.0	3161																
8	3	6.7	467	7.5	559	8.4	658	10.4	861	7.8	817	10.7	1064	11.8	1109	14.5	1268								
	4	8.6	693	9.1	731	10.8	872	13.1	1065	11.8	1045	12.3	1078	14.3	1238	17.3	1475	14.9	1320	15.5	1365	17.8	1558	21.4	1858
	5	10.6	782	11.3	864	13.0	1038	16.4	1360	13.8	1137	14.5	1216	16.6	1405	20.6	1773	17.0	1414	17.8	1501	20.2	1720	25.0	2159
	6	13.1	1039	13.3	1169	16.3	1583	21.3	2261	16.4	1401	16.6	1525	19.9	1958	25.6	2676	19.6	1677	19.9	1814	23.6	2276	29.9	3065
	7	16.0	1464	16.7	1673	20.6	2242	27.5	3219	19.2	1824	21.0	2133	24.3	2620	31.8	3637	22.5	2107	24.4	2428	28.0	2946	36.1	4029
	8	17.9	1904	20.2	2234	24.2	2778	33.1	3938	21.2	2267	23.6	2552	27.9	3051	39.5	4359	24.5	2552	27.0	2850	31.7	3381	43.9	4753
10	3	7.3	515	8.2	612	9.2	721	11.4	942	11.2	1111	12.2	1227	13.6	1383	16.8	1734								
	4	9.3	749	9.8	789	11.6	936	14.1	1144	13.2	1348	13.8	1396	16.1	1608	19.6	1939								
	5	11.3	833	12.0	920	13.8	1101	17.4	1441	15.2	1434	16.1	1531	18.4	1770	23.0	2239	19.2	1876	20.1	1985	22.9	2274	28.5	2857
	6	13.8	1093	14.0	1233	17.1	1661	22.3	2365	17.8	1697	18.1	1775	21.7	2187	28.0	3165	21.8	2141	22.2	2219	26.3	2666	33.6	3786
	7	16.6	1528	17.4	1745	21.4	2329	28.4	3334	20.7	2135	21.6	2359	26.1	3006	34.1	4137	24.7	2582	25.8	2821	30.7	3519	39.8	4761
	8	18.6	1978	20.9	2314	25.0	2870	34.1	4054	22.7	2587	25.2	2935	29.7	2544	39.9	4860	26.8	3037	29.4	3399	34.4	4057	45.6	5486
	9	23.2	2117	25.4	2482	31.1	3244	41.4	4597																
		29.5	3352	31.6	3598	38.6	4397	51.7	5892	33.7	3967	36.0	4217	43.5	5077	57.6	6703	37.8	4422	40.3	4688	48.3	5598	63.5	7335
12	4	10.0	804	10.5	848	12.4	1001	15.1	1224	14.6	1732	15.2	1806	17.6	2090	21.5	2449								
	5	12.0	884	12.7	975	14.6	1165	18.4	1522	16.6	1815	17.5	1941	20.0	2247	24.9	2849								
	6	14.5	1148	14.7	1296	17.9	1738	23.3	2469	19.2	2086	19.6	2244	23.3	2817	29.9	3799	23.9	2744	24.4	2922	28.7	3576	36.5	4733
	7	17.3	1591	18.1	1817	22.2	2416	29.4	3449	22.1	2531	23.0	2775	27.7	3497	36.1	4782	26.8	3195	27.9	3460	33.1	4261	42.8	5719
	8	18.3	1945	21.8	2404	25.8	2962	35.1	4171	23.1	2884	26.7	3396	31.3	4048	41.8	5506	27.8	3554	31.6	4094	36.8	4830	48.6	6446
	9	23.9	2181	26.1	2553	31.9	3327	42.4	4704	28.7	3123	31.1	3522	37.5	4414	49.2	6042	33.5	3796	36.1	4218	43.0	5191	56.1	6984
	10	30.2	3429	32.3	3680	39.4	4488	52.7	6003	35.0	4373	37.4	4646	45.1	5580	59.6	7344	39.9	5049	42.4	5341	50.7	6353	66.5	8289
	12	42.8	5137	47.2	5372	56.4	6075	80.1	8124	47.8	6087	52.3	6340	62.2	7141	87.2	9470	52.7	6768	57.5	7045	67.9	7930	94.2	10.420

(1) - QUANTITIES SHOWN ARE FOR HEADWALLS AT THE INLET AND OUTLET

NEVADA DEPARTMENT OF TRANSPORTATION

ESTIMATE OF QUANTITIES
TYPE I HEADWALLS

Signed Original On File
CHIEF BRIDGE ENGINEER

B-20.1.6 (502)
ADOPTED 11/70 REVISION 3/97

Standard Plans Change Request

Requests for modifying the Standard Plans for Road and Bridge Construction must be submitted to:

NDOT Specifications Division
Attn: Standards and Manuals Supervisor
1263 South Stewart Street
Carson City, Nevada 89712

Standard Sheet No.: B-20.1.5.1 Page No.: B-10 Note: A separate form is required for each change.

Description of requested modification or correction: Changed table. ..... (Please attach supporting information).

Reason for request: Headwall designs have been checked for new design requirements. .....

Requestor Information: Name: Troy Martin Phone: 888-7380

==========

For Standards/Manuals Personnel Only: ☐ Approved ☐ Denied

Revised by: Signature: _____ Date: _____

Policy Review:
☐ CADD Standards ☐ ASTM ☐ AASHTO ☐ Design Manual ☐ Specifications

Reviewed by: Signature: _____ Date: _____

Notes: .....

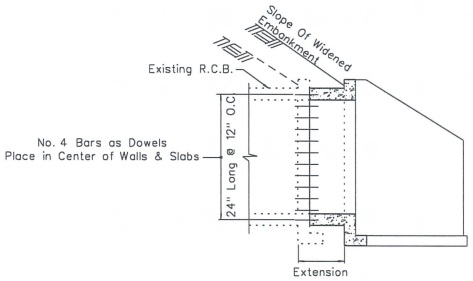

PART LONGITUDINAL SECTION

Old Headwalls to Remain in Place
Unless Otherwise Noted

NOTES:

1. FOR GENERAL NOTES SEE SHEET B-20.1.1.
2. DOWEL HOLES SHALL BE DRILLED 12" INTO EXISTING CONCRETE. DIAMETER OF HOLE SHALL BE 1/4" LARGER THAN DIAMETER OF BAR. HOLE MAY BE INCLINED NO MORE THAN 5° OFF THE HORIZONTAL. DOWELS SHALL BE EPOXIED INTO CLEAN HOLES. EPOXY SHALL CONFORM TO THE REQUIREMENT OF SECTION 728 OF THE STANDARD SPECIFICATIONS.

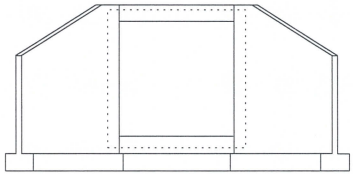

ELEVATION

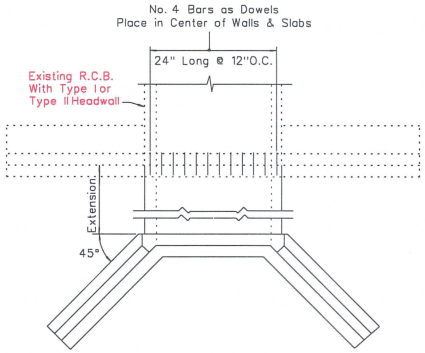

PLAN

R.C.B. CULVERT EXTENSION

* * -3" To Center Of Hole.

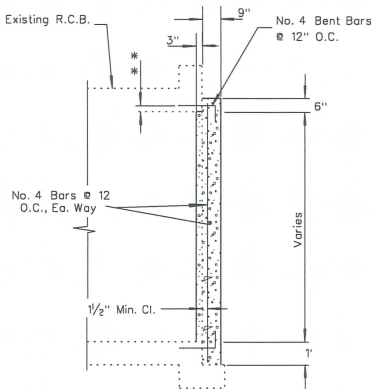

SECTION

METHOD OF PLUGGING R.C.B.

Width And Height Varies

NEVADA DEPARTMENT OF TRANSPORTATION

METHOD OF EXTENDING
R.C.B. CULVERTS

Signed Original On File	B-20.1.7	(502)
CHIEF BRIDGE ENGINEER	ADOPTED 11/70	REVISION 1/09

Standard Plans Change Request

Requests for modifying the Standard Plans for Road and Bridge Construction must be submitted to:

NDOT Specifications Division
Attn: Standards and Manuals Supervisor
1263 South Stewart Street
Carson City, Nevada 89712

Standard Sheet No.: B-20.1.8 Page No.: B-13 Note: A separate form is required for each change.

Description of requested modification or correction: Changed notes and detail. ..... (Please attach supporting information).

Reason for request: RCB designs have been changed for new design requirements. .....

Requestor Information: Name: Troy Martin Phone: 888-7380

==========

For Standards/Manuals Personnel Only: ☐ Approved ☐ Denied

Revised by: Signature: _____ Date: _____

Policy Review:
☐ CADD Standards ☐ ASTM ☐ AASHTO ☐ Design Manual ☐ Specifications

Reviewed by: Signature: _____ Date: _____

Notes: .....

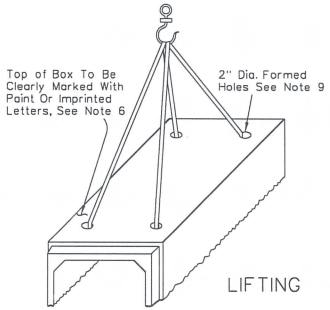

LIFTING

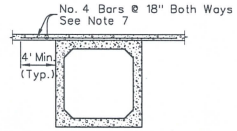

CONCRETE PAVING

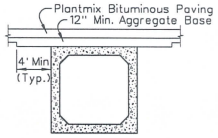

BITUMINOUS PAVING

MINIMUM COVER CONDITIONS

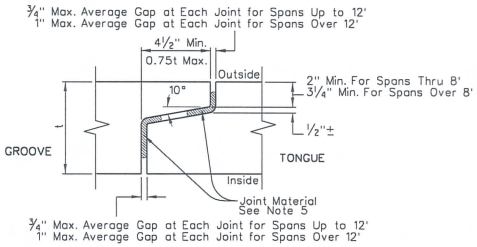

TYPICAL JOINT

NOTES:

1. CONCRETE SHALL BE AS SPECIFIED IN AASHTO M259 OR M273 (ASTM C1577), AS MODIFIED IN SUBSECTION 502.03.24. (ALL PRECAST CONCRETE BOX CULVERTS SHALL COMPLY WITH ASTM C1577-DESIGN ACCORDING TO AASHTO LRFD).
2. REINFORCING STEEL SHALL BE AASHTO M31 (ASTM A615) GRADE 60. WELDED WIRE FABRIC SHALL BE AASHTO M55 (ASTM A185) (SMOOTH WIRE), OR AASHTO M22 (ASTM A497) (DEFORMED WIRE). REINFORCING STEEL IN THE TOP SLAB SHALL HAVE AN EPOXY COATING CONFORMING TO AASHTO M284 (ASTM D3963) WHEN THERE IS 6" OR LESS OF COVER ON THE RCB (CLARK COUNTY EXCLUDED).
3. BEDDING MATERIAL SHALL BE GRANULAR BACKFILL OR TYPE 2 CLASS B AGGREGATE MEETING THE RESISTIVITY REQUIREMENTS FOR GRANULAR BACKFILL. BEDDING MATERIAL WILL BE PAID FOR AS GRANULAR BACKFILL.
4. HEADWALL DETAILS SHALL BE AS SHOWN IN THE STANDARD PLANS. EXPOSED REINFORCEMENTS TO TIE CAST-IN-PLACE HEADWALL TO PRECAST BOX SHALL CONSIST OF EITHER NO. 4 BARS AT 12" SPACINGS OR EXPOSURE OF THE PRECAST BOX WELDED WIRE FABRIC. THE NO. 4 BARS SHALL BE CAST A MINIMUM OF 18" INTO THE PRECAST BOX SEGMENT. BOTH THE NO. 4 BAR OR WELDED WIRE FABRIC SHALL EXTEND INTO HEADWALL TO 2" CLEAR OF THE HEADWALL FACE.
5. JOINT MATERIAL SHALL BE A PREFORMED JOINT MATERIAL MEETING AASHTO M198 TYPE B. THE MATERIAL SHALL BE INSTALLED IN ACCORDANCE WITH THE MANUFACTURERS RECOMMENDATIONS. A DOUBLE APPLICATION OF JOINT MATERIAL SHALL BE USED. APPLY ONE APPLICATION TO THE TONGUE AND THE OTHER TO THE GROOVE. THE MINIMUM SIZE OF JOINT MATERIAL SHALL BE 1 1/4". ANY JOINT MATERIAL EXTRUDING FROM THE INTERIOR OF THE JOINT SHALL BE REMOVED FLUSH WITH THE BOX WALL.
6. IN ADDITION TO THE MARKINGS REQUIRED BY THE AASHTO AND ASTM SPECIFICATIONS, MARK EACH BOX SECTION WITH THE APPROPRIATE NDOT CONTRACT NUMBER.
7. REINFORCING STEEL SHALL EXTEND FULL WIDTH OF CONCRETE PAVEMENT AND SHALL HAVE A MINIMUM CLEARANCE OF 3" ON THE BOTTOM. IN AREAS OF THE STATE WHERE ROAD SALTS ARE USED, THE REINFORCING SHALL BE EPOXY COATED. REINFORCING IS TO BE PLACED PARALLEL TO THE CENTERLINE OF ROAD FOR LONGITUDINAL REINFORCEMENT AND PARALLEL TO THE PRECAST BOX FOR TRANSVERSE REINFORCEMENT.
8. LENGTH OF CULVERT SHALL BE INCREASED AS FOLLOWS: ADD 2' TO EACH END WHEN COVER AT SHOULDER IS 0' TO 5', ADD AN ADDITIONAL 1' TO EACH END FOR EACH SUCCEEDING 5' OF COVER OR PORTION THEREOF.
9. FILL CYLINDRICAL LIFTING HOLES (LOCATED BY MANUFACTURER) WITH AN APPROVED EPOXY NON-SHRINK GROUT. HOLE WITH AN APPROVED CONICAL SHAPE FOR THE BOTTOM 3" MAY BE FILLED WITH A CONCRETE GROUT COMPOSED OF ONE PART BY VOLUME OF CEMENT TO TWO PARTS BY VOLUME OF SAND WITH ONLY ENOUGH WATER TO PERMIT PLACING AND TAMPING. AN APPROVED CUSTOM PLUG MAY BE USED. AN OPTIONAL METHOD OF LIFTING MAY BE USED WITH APPROVAL.

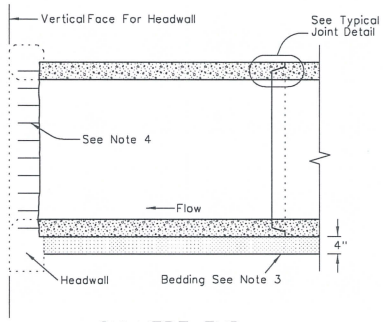

CULVERT END

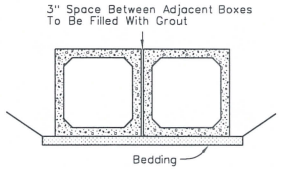

MULTIPLE CULVERT INSTALLATION

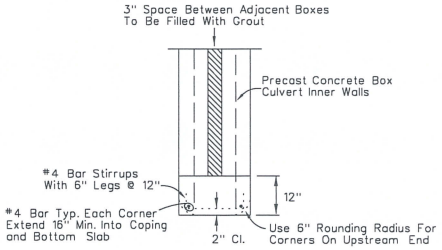

MULTIPLE CULVERT INNER WALL END PLAN

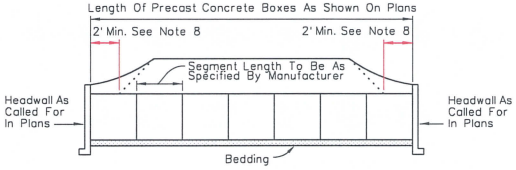

TYPICAL CULVERT INSTALLATION

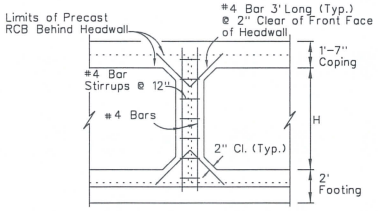

MULTIPLE SPAN INNER WALL END ELEVATION

Designer To Investigate The Availability Of The Required Box Size.

NEVADA DEPARTMENT OF TRANSPORTATION

PRECAST CONCRETE BOX CULVERT

Signed Original On File	B-20.1.8	(502)
CHIEF BRIDGE ENGINEER	ADOPTED 4/85	REVISION 3/15

Standard Plans Change Request

Requests for modifying the Standard Plans for Road and Bridge Construction must be submitted to:

NDOT Specifications Division
Attn: Standards and Manuals Supervisor
1263 South Stewart Street
Carson City, Nevada 89712

Standard Sheet No.: B-28.1.1 Page No.: B-28 Note: A separate form is required for each change.

Description of requested modification or correction: Updated notes. (Please attach supporting information).

Reason for request: Deleted note referring to 10th points, shop drawing requirements defined in the plans and specifications.

Requestor Information: Name: Troy Martin Phone: 888-7380

==========

For Standards/Manuals Personnel Only: ☐ Approved ☐ Denied

Revised by: Signature: _____ Date: _____

Policy Review:
☐ CADD Standards ☐ ASTM ☐ AASHTO ☐ Design Manual ☐ Specifications

Reviewed by: Signature: _____ Date: _____

Notes:

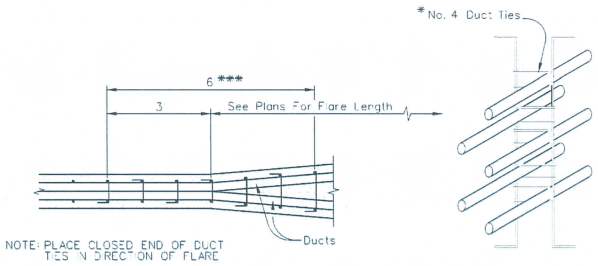

PLAN

STIRRUP REINFORCEMENT AT FLARE OF GIRDER STEM

DISTRIBUTION OF PRESTRESSING FORCE:

UNLESS OTHERWISE NOTED THE PRESTRESSING FORCE, P JACK OR PF, SHALL BE DISTRIBUTED WITH AN APPROXIMATELY EQUAL AMOUNT IN EACH GIRDER AND SHALL BE PLACED SYMMETRICALLY ABOUT THE CENTERLINE OF THE STRUCTURE. IN SLABS, THE PRESTRESSING FORCE SHALL BE UNIFORMLY DISTRIBUTED ACROSS THE SLAB.

STRESSING SEQUENCE:

NO MORE THAN ½ OF THE PRESTRESSING FORCE IN ANY GIRDER MAY BE STRESSED BEFORE AN EQUAL FORCE IS STRESSED IN THE ADJACENT GIRDERS, AT NO TIME DURING THE STRESSING OPERATIONS WILL MORE THAN 1/6 OF THE TOTAL PRESTRESSING FORCE BE APPLIED ECCENTRICALLY ABOUT THE CENTERLINE OF THE STRUCTURE.

GIRDER STEM SHALL BE FLARED NEAR ANCHORAGE TO PROVIDE A MINIMUM OF 1½" CONCRETE COVERING THE REBAR, FLARE MAY BE ON ONE SIDE OF THE GIRDER ONLY. BAR REINFORCEMENT INTERFERING WITH THE PRESTRESSING TENDON ALIGNMENT SHALL BE ADJUSTED AS APPROVED BY THE ENGINEER.

* BARS MARKED THUSLY ARE TO BE INCLUDED IN THE COST OF PRESTRESSING CAST-IN-PLACE CONCRETE.

** CONCRETE USED IN THE BEARING SEATS IS TO BE INCLUDED IN THE COST OF PRESTRESSING CAST-IN-PLACE CONCRETE.

*** ADD ADDITIONAL No.4 STIRRUP BARS, IN PAIRS, AS NECESSARY TO MAINTAIN A 12 INCH STIRRUP SPACING. SEE PLANS FOR STIRRUP BENDING DIMENSIONS AND EPOXY COATING REQUIREMENTS. ADDITIONAL No.4 STIRRUP BARS TO BE INCLUDED IN COST OF PRESTRESSING.

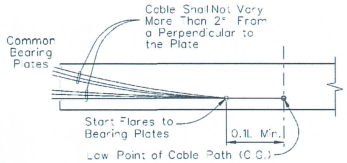

COMMON BEARING PLATE PRESTRESSING PATH

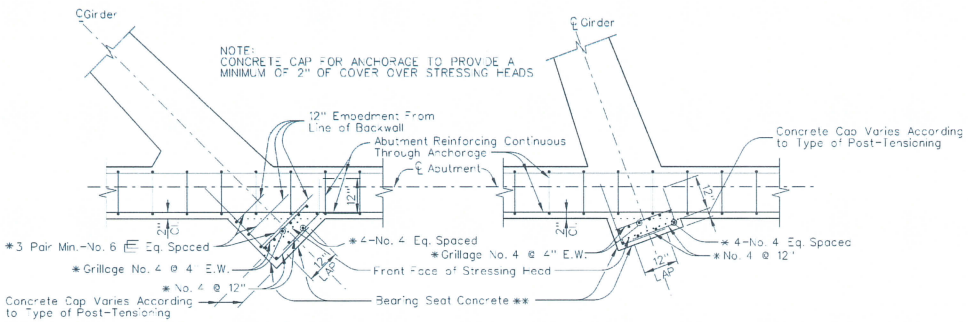

SKEW OVER 20° PLAN

SKEW 20° AND UNDER PLAN

BEARING SEAT FOR PRESTRESSED ANCHORAGE AT DIAPHRAGM TYPE ABUTMENTS

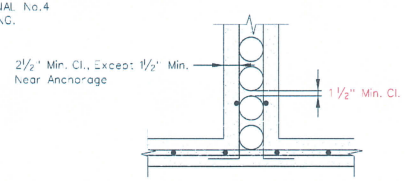

DUCTS OVER 4" O.D.

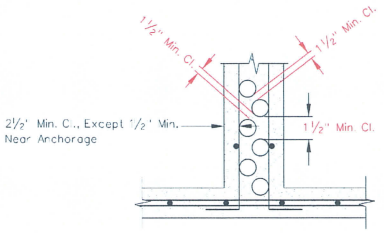

DUCTS 4" O.D. & LESS

CLEARANCE REQUIREMENTS FOR DUCTS

1. DUCT PATTERNS SHOWN ARE FOR 12" WIDE GIRDER STEM; FOR OTHER WIDTHS THE MINIMUM CLEARANCES MUST BE MAINTAINED.

2. APPROVAL OF THE ENGINEER IS REQUIRED FOR DEVIATIONS.

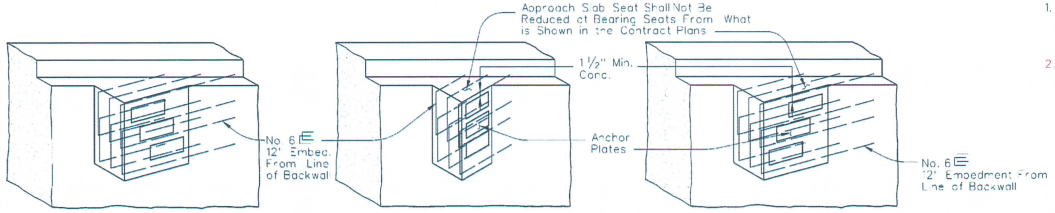

EXT. SLOPING GIRDER

VERTICAL GIRDER

EXT. SLOPING GIRDER

NOTE: DETAILS MAY BE MODIFIED TO SUIT SPECIFIC ANCHORAGE

TYPICAL BEARING SEAT ILLUSTRATIONS

NEVADA DEPARTMENT OF TRANSPORTATION

CAST-IN-PLACE PRESTRESSED GIRDER DETAILS

Signed Original On File	B-28.1.1	(503)
CHIEF BRIDGE ENGINEER	ADOPTED 3/85	REVISION 3/15

Standard Plans Change Request

Requests for modifying the Standard Plans for Road and Bridge Construction must be submitted to:

NDOT Specifications Division
Attn: Standards and Manuals Supervisor
1263 South Stewart Street
Carson City, Nevada 89712

Standard Sheet No.: B-29.1.1 Page No.: B-~~29~~ 21 Note: A separate form is required for each change.

Description of requested modification or correction: Updated details. ..... (Please attach supporting information).

Reason for request: Minor improvement of 2 details, used asphalt felt under pavement and extended joint material further up rail. .....

Requestor Information: Name: Troy Martin Phone: 888-7380

==========

For Standards/Manuals Personnel Only: ☐ Approved ☐ Denied

Revised by: Signature: _____ Date: _____

Policy Review:
☐ CADD Standards ☐ ASTM ☐ AASHTO ☐ Design Manual ☐ Specifications

Reviewed by: Signature: _____ Date: _____

Notes: .....

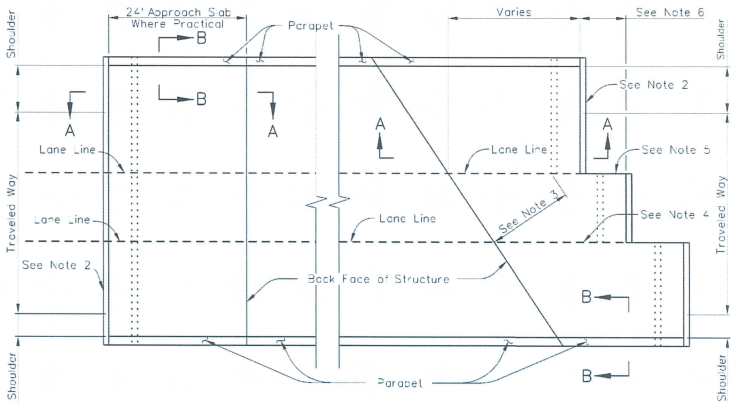

TYPICAL PLAN (NORMAL) TYPICAL PLAN (SKEWED)

CONCRETE PAVING

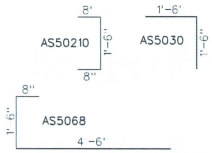

BENT BAR DETAIL

NOTES:

1. THE CONCRETE SHALL BE "EA", F'c=4500 PSI, OR "A" F'c=4000 PSI, AS INDICATED IN THE PLANS. WHEN "EA" CONCRETE IS REQUIRED, THE REINFORCING STEEL SHALL HAVE AN EPOXY COATING.
2. A. THE CONTACT JOINT BETWEEN THE CONCRETE PAVEMENT AND THE APPROACH SLAB SHALL PARALLEL THE BACK FACE OF THE STRUCTURE FOR SKEWS OF 20 DEGREES OR LESS. FOR SKEWS GREATER THAN 20 DEGREES THE CONTACT JOINT SHALL BE NORMAL TO THE ROADWAY ALIGNMENT CONTROL LINE. JOINTS SHALL BE STAGGERED ON LANE LINES FOR SKEWED STRUCTURES. STAGGER LINES SHALL BE AT EACH LANE LINE FOR SKEWS OF 45 DEGREES OR MORE.
   B. THE CONTACT JOINT BETWEEN ASPHALT PAVEMENT AND APPROACH SLAB SHALL PARALLEL THE BACK FACE OF THE STRUCTURE.
3. FOR SKEWS GREATER THAN 20 DEGREES THE DISTANCE MEASURED NORMAL TO AND FROM THE BACK FACE OF THE STRUCTURE TO THE END OF THE APPROACH SLAB SHALL BE A MINIMUM OF 15'.
4. LONGITUDINAL CONSTRUCTION JOINTS IN THE APPROACH SLAB MAY BE LOCATED ON LANE LINES WHEN PERMITTED BY THE ENGINEER.
5. PLACE 1/4" EXPANSION JOINT MATERIAL BETWEEN THE CONCRETE PAVEMENT AND THE LONGITUDINAL FACE OF THE APPROACH SLAB. THE EXPANSION JOINT MATERIAL IS TO BE RECESSED 1/2" FROM THE SURFACE AND THE JOINT SEALED IDENTICALLY TO THE "LONGITUDINAL WEAKENED PLANE JOINT" ON SHEET R-10.1.1 OF THE STANDARD PLANS.
6. THE LENGTH OF THE STEPS MUST BE 15 OR INCREMENTAL INTERVALS OF 15' TO MAINTAIN A 15 SPACING OF THE TRANSVERSE WEAKENED PLANE JOINTS IN THE CONCRETE PAVEMENT. SEE SECTION 409.03.09 OF THE SPECIAL PROVISIONS AND SHEET R-10.1.2 OF THE STANDARD PLANS FOR SAW-CUTTING DETAILS.
7. FILL MATERIAL UNDER APPROACH SLABS SHALL BE A 12" LAYER OF GRANULAR BACKFILL COMPACTED TO NOT LESS THAT 95% OF THE MAXIMUM DENSITY IN ACCORDANCE WITH SUBSECTION 207.03.01 OF THE STANDARD SPECIFICATIONS.
8. SEE PLANS FOR EXPANSION JOINT DETAILS.
9. GALVANIZE ASSEMBLY AFTER FABRICATION OR USE A588 STEEL. ASSEMBLY TO EXTEND FULL WIDTH OR TO THE FACE OF ANY BRIDGE OR BARRIER RAILS. FULL PENETRATION BUTT WELD ANY FIELD SPLICES.

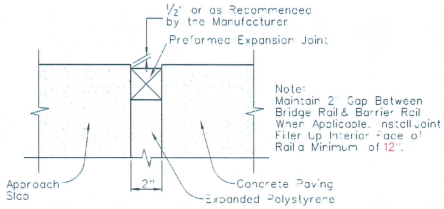

DETAIL D

CONCRETE PAVING OPTION

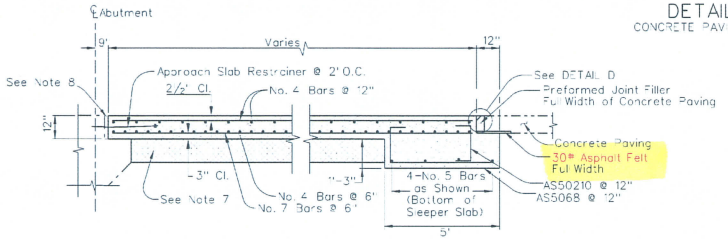

SECTION A-A

SEE DETAIL C FOR PLANTMIX BITUMINOUS PAVING

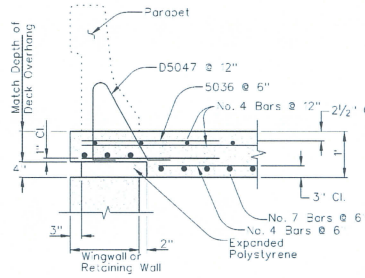

SECTION B-B

When the Approach Slab Extends Beyond the Wingwalls, Extend the Expanded Polystyrene 2" Beyond the Wingwall Ends, Adjust the Approach Slab to its Full Depth & Eliminate the 5036 Bars.

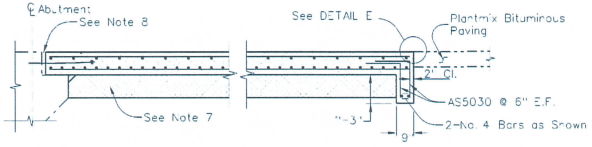

DETAIL C

PLANTMIX BITUMINOUS PAVING

FOR INFORMATION & DIMENSIONS NOT SHOWN SEE SECTION A-A

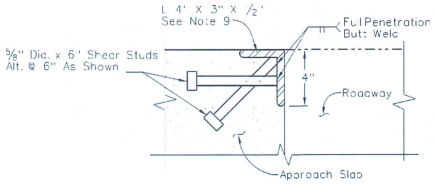

DETAIL E

APPROACH SLAB JOINT PROTECTION

PLANTMIX BITUMINOUS PAVING

THIS SHEET IS FOR GENERAL INFORMATION. FOR ACTUAL DIMENSIONS AND REINFORCING STEEL LAYOUTS SEE CONTRACT PLANS.

NEVADA DEPARTMENT OF TRANSPORTATION

APPROACH SLAB

Signed Original On File	B-29.1.1	(502)
CHIEF BRIDGE ENGINEER	ADOPTED 12/90	REVISION 3/15

Standard Plans Change Request

Requests for modifying the Standard Plans for Road and Bridge Construction must be submitted to:

NDOT Specifications Division
Attn: Standards and Manuals Supervisor
1263 South Stewart Street
Carson City, Nevada 89712

Standard Sheet No.: B-30.1.1 Page No.: B-22 Note: A separate form is required for each change.

Description of requested modification or correction: Update design for AASHTO LRFD Specifications. ..... (Please attach supporting information).

Reason for request: Use AASHTO LRFD Specifications required by FHWA. .....

Requestor Information: Name: Troy Martin Phone: 888-7380

==========

For Standards/Manuals Personnel Only: ☐ Approved ☐ Denied

Revised by: Signature: _____ Date: _____

Policy Review:
☐ CADD Standards ☐ ASTM ☐ AASHTO ☐ Design Manual ☐ Specifications

Reviewed by: Signature: _____ Date: _____

Notes: .....

TYPE 1A – REINFORCED CONCRETE RETAINING WALL TABLE OF DIMENSIONS AND REINFORCING STEEL

Layout and reinforcement data	Design H	4'	6'	8'	10'	12'	14'	16'	18'	20'	22'	24'	26'	28'	30'
	W	3'-5"	4'-10"	6'-2"	7'-8"	9'-0"	10'-4"	11'-7"	12'-11"	14'-8"	16'-4"	18'-1"	19'-9"	21'-4"	22'-11"
	F	1'-0"	1'-0"	1'-0"	1'-4"	1'-4"	1'-4"	1'-4"	1'-6"	1'-8"	2'-0"	2'-4"	2'-9"	3'-3"	3'-9"
	C	1'-0"	1'-3"	1'-6"	1'-9"	2'-1"	2'-5"	2'-10"	3'-3"	3'-9"	4'-3"	4'-10"	5'-5"	6'-0"	6'-7"
	Batter, Z	1/2	1/2	1/2	1/2	1/2	1/2	1/2	1/2	1/2	5/8	5/8	3/4	3/4	7/8
	ⓐ bars	–	–	–	–	–	–	–	–	#5@18"	#5@18"	#5@12"	#5@12"	#5@12"	#5@12"
	ⓑ bars	–	–	–	–	#5@12"	#5@12"	#6@12"	#5@6	#5@6	#5@6	#6@6	#6@6"	#7@6	#7@6"
	ⓒ bars	#5@12"	#5@12"	#5@12"	#5@6"	#6@6"	#7@6"	#7@6"	#8@6"	#9@6"	#9@6"	#10@6"	#10@6"	#11@6"	#11@6"
	ⓓ bars	#5@12"	#5@12"	#5@12"	#5@6"	#5@6"	#6@6"	#7@6"	#8@6"	#9@6"	#9@6"	#9@6"	#9@6"	#9@6"	#9@6"
	ⓔ bars	#5@12"	#5@12"	#5@12"	#5@12"	#5@12"	#6@12"	#5@6"	#5@6"	#5@6"	#5@6"	#5@6"	#6@6"	#6@6"	#6@6"
	L_1	–	–	–	–	5'-0"	6'-0"	6'-6"	7'-0"	7'-6"	8'-0"	8'-6"	9'-0"	9'-6"	10'-0"
	L_2	–	–	–	–	–	–	–	–	14'-0"	15'-6"	17'-0"	18'-6"	20'-0"	22'-0"
Est'd Qtys	Concrete ft^3/ft	7.8	11.6	15.5	22.4	27.0	31.9	36.8	44.2	52.8	67.3	81.2	101.5	121.9	148.8
	Reinf lbs/ft	31	42	53	88	108	151	193	259	329	364	455	514	629	679
Max Toe Pressure (ksf)	Level Slope w/surch.	1.0	1.3	1.6	1.9	2.2	2.4	2.6	2.9	3.0	3.2	3.4	3.7	3.9	4.2
	Level Slope @ 0.15g	0.9	1.2	1.5	1.9	2.1	2.4	2.6	2.9	3.1	3.3	3.5	3.8	4.1	4.5
	Level Slope @ 0.25g	0.9	1.2	1.6	2.0	2.3	2.5	2.8	3.1	3.3	3.6	3.8	4.1	4.5	4.8
	Level Slope @ 0.35g	1.0	1.3	1.6	2.1	2.4	2.7	3.0	3.3	3.6	3.9	4.1	4.5	4.9	5.3
	Level Slope @ 0.40g	1.0	1.3	1.7	2.2	2.5	2.8	3.1	3.5	3.7	4.0	4.3	4.6	5.1	5.5
	Level Slope @ 0.50g	1.1	1.4	1.8	2.3	2.7	3.0	3.4	3.8	4.0	4.4	4.7	5.1	5.5	6.0
	Slope ≤ 4:1	0.7	1.1	1.4	1.8	2.1	2.4	2.7	3.0	3.2	3.6	3.8	4.1	4.5	4.9
	Slope ≤ 4:1 @ 0.15g	0.8	1.2	1.6	2.1	2.5	2.8	3.2	3.6	3.9	4.2	4.6	4.9	5.4	5.8

STANDARD BAR LAPS		
BAR #	UNCOATED	EPOXIED
4	20"	24"
5	26"	30"
6	31"	36"
7	39"	45"
8	51"	60"
9	64"	78"
10	82"	98"
11	100"	120"

REINFORCED CONCRETE RETAINING WALL TYPES 1A, 1B & 1C

Backfill Condition	Wall Type Required for Seismic Acceleration				
	0.15g	0.25g	0.35g	0.40g	0.50g
Level backfill w/surcharge	1A	1A	1A	1A	1A
Sloping backfill w/o surcharge					
Slope ≤ 4:1	1A	1B	1B	1B	1B
4:1 Slope ≤ 3:1	1B	1B	1B	1B	*
3:1 Slope ≤ 2:1	1C	*	*	*	*

* Special design required

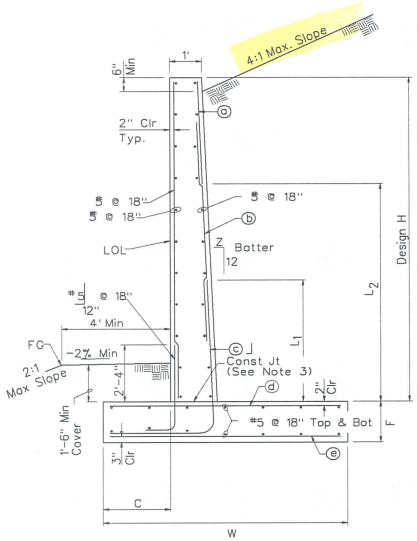

TYPICAL SECTION: TYPE 1A

NOTES:

1. FOR GENERAL NOTES SEE B-30.1.3
2. FOR DETAILS NOT SHOWN AND DRAINAGE REQUIREMENTS SEE SHEETS B-30.1.3 THRU B30-1.5.
3. ROUGHEN CONSTRUCTION JOINT SURFACE TO 1/4" AMPLITUDE.
4. GEOTECHNICAL ENGINEER WILL VERIFY MAXIMUM ALLOWABLE BEARING PRESSURES FOR ACTUAL SITE SOIL CONDITIONS.

NEVADA DEPARTMENT OF TRANSPORTATION

TYPE 1A
CANTILEVER CONCRETE
RETAINING WALLS

Signed Original On File	B-30.1.1	(502)
CHIEF BRIDGE ENGINEER	ADOPTED 12/02	REVISION 7/04

Standard Plans Change Request

Requests for modifying the Standard Plans for Road and Bridge Construction must be submitted to:

NDOT Specifications Division
Attn: Standards and Manuals Supervisor
1263 South Stewart Street
Carson City, Nevada 89712

Standard Sheet No.: B-30.1.2 Page No.: B-23 Note: A separate form is required for each change.

Description of requested modification or correction: Update design for AASHTO LRFD Specifications. (Please attach supporting information).

Reason for request: Use AASHTO LRFD Specifications required by FHWA.

Requestor Information: Name: Troy Martin Phone: 888-7380

==========

For Standards/Manuals Personnel Only: ☐ Approved ☐ Denied

Revised by: Signature: _____ Date: _____

Policy Review:
☐ CADD Standards ☐ ASTM ☐ AASHTO ☐ Design Manual ☐ Specifications

Reviewed by: Signature: _____ Date: _____

Notes:

	TYPE 2A – REINFORCED CONCRETE RETAINING WALL TABLE OF DIMENSIONS AND REINFORCING STEEL					
Layout and reinforcement data	Design H	4'	6'	8'	10'	12'
	W	4'-0"	5'-6"	7'-0"	8'-9"	10'-3"
	F	1'-0"	1'-0"	1'-0"	1'-4"	1'-4"
	K*	0	1'-0"	0	0	0
	Batter, Z	1/2	1/2	1/2	1/2	1/2
	ⓐ bars	#5@12"	#5@12"	#5@12"	#5@6"	#5@6"
	ⓑ bars	#5@12"	#6@12"	#6@12"	#6@6"	#6@6"
	Key Bars	None	#5@18"	None	None	None
Est'd Qtys	Concrete ft³/ft	8.4	12.3	16.4	23.8	28.7
	Reinf lb/ft	29	42	54	93	109
Max Toe Pressure (ksf)	Level Slope w/srchg	1.2	1.6	2.0	2.4	2.8
	Level Slope @ 0.15g	1.1	1.5	1.9	2.4	2.8
	Level Slope @ 0.25g	1.1	1.5	2.0	2.5	2.9
	Level Slope @ 0.35g	1.1	1.6	2.0	2.6	3.0
	Level Slope @ 0.40g	1.2	1.6	2.1	2.6	3.1
	Level Slope @ 0.50g	1.2	1.7	2.2	2.7	3.2
	Slope ≤ 4:1	1.0	1.5	2.0	2.5	3.0
	Slope ≤ 4:1 @ 0.15g	1.1	1.6	2.2	2.8	3.3
	Slope ≤ 4:1 @ 0.25g	1.2	1.8	---	---	---
	Slope ≤ 3:1	1.1	1.6	2.1	2.7	3.3
	Slope ≤ 3:1 @ 0.15g	1.2	1.8	---	---	---
	Slope ≤ 2:1	1.3	2.0	---	---	---

* Key only required for static slope ≤ 2:1
Add 2 cuft/ft concrete and 8 lbs/ft reinf.

	TYPE 2B – REINFORCED CONCRETE RETAINING WALL TABLE OF DIMENSIONS AND REINFORCING STEEL					
Layout and reinforcement data	Design H	4'	6'	8'	10'	12'
	W	4'-1"	6'-0"	7'-10"	10'-0"	11'-1"
	F	1'-0"	1'-0"	1'-0"	1'-4"	1'-4"
	K*	0	0	1'-0"	1'-0"	1'-6"
	Batter, Z	1/2	1/2	1/2	1/2	1/2
	ⓐ bars	#5@12"	#5@12"	#5@12"	#6@12"	#5@6"
	ⓑ bars	#5@12"	#5@12"	#5@6"	#6@6"	#7@6"
	Key Bars	None	None	#5@18"	#5@18"	#5@18"
Est'd Qtys	Concrete ft³/ft	8.5	12.8	17.2	25.5	30.8
	Reinf lb/ft	29	41	61	92	129
Max Toe Pressure (ksf)	Slope ≤ 4:1 @ 0.25g	---	---	2.2	2.7	3.2
	Slope ≤ 4:1 @ 0.35g	1.3	1.8	2.3	3.0	3.5
	Slope ≤ 3:1 @ 0.15g	---	---	2.2	2.8	3.4
	Slope ≤ 2:1	---	---	2.5	3.2	3.8

* Key only required for static slope ≤ 2:1
For 1'-0" key, add 2 ft³/ft concrete and 8 lb/ft reinf.
For 1'-6" key, add 4.5 ft³/ft concrete and 10.1 lb/ft reinf.

	TYPE 2C – REINFORCED CONCRETE RETAINING WALL TABLE OF DIMENSIONS AND REINFORCING STEEL					
Layout and reinforcement data	Design H	4'	6'	8'	10'	12'
	W	4'-4"	6'-4"	8'-3"	10'-6"	12'-6"
	F	1'-0"	1'-0"	1'-0"	1'-4"	1'-4"
	Batter, Z	1/2	1/2	1/2	1/2	1/2
	ⓐ bars	#5@12"	#5@12"	#5@12"	#6@12"	#5@6"
	ⓑ bars	#5@12"	#6@12"	#5@6"	#6@6"	#8@6"
Est'd Qtys	Concrete ft³/ft	8.7	13.1	17.6	26.1	31.7
	Reinf lb/ft	30	45	63	94	149
Max Toe Pressure (ksf)	Slope ≤ 4:1 @ 0.40g	1.3	1.8	2.3	3.0	3.5
	Slope ≤ 3:1 @ 0.25g	1.3	1.8	2.4	3.0	3.6

NOTES:

1. FOR GENERAL NOTES SEE B-30.1.3
2. FOR DETAILS NOT SHOWN AND DRAINAGE REQUIREMENTS SEE SHEETS B-30.1.3 THRU B30-1.5.
3. ROUGHEN CONSTRUCTION JOINT SURFACE TO 1/4" AMPLITUDE.
4. GEOTECHNICAL ENGINEER WILL VERIFY MAXIMUM ALLOWABLE BEARING PRESSURES FOR ACTUAL SITE SOIL CONDITIONS.

	TYPE 2D – REINFORCED CONCRETE RETAINING WALL TABLE OF DIMENSIONS AND REINFORCING STEEL					
Layout and reinforcement data	Design H	4'	6'	8'	10'	12'
	W	4'-11"	7'-1"	9'-5"	11'-11"	14'-2"
	F	1'-0"	1'-0"	1'-0"	1'-4"	1'-4"
	Batter, Z	1/2	1/2	1/2	1/2	1/2
	ⓐ bars	#5@12"	#5@12"	#5@12"	#5@6"	#6@6"
	ⓑ bars	#5@12"	#5@6"	#6@6"	#7@6"	#9@6"
Est'd Qtys	Concrete ft³/ft	9.3	13.9	18.8	28.0	33.9
	Reinf lb/ft	31	52	77	122	195
Max Toe Pressure (ksf)	Slope ≤ 4:1 @ 0.50g	1.3	1.8	2.4	3.0	3.6
	Slope ≤ 3:1 @ 0.35g	1.3	1.9	2.4	3.1	3.7

	TYPE 2E – REINFORCED CONCRETE RETAINING WALL TABLE OF DIMENSIONS AND REINFORCING STEEL					
Layout and reinforcement data	Design H	4'	6'	8'	10'	12'
	W	5'-7"	8'-4"	11'-0"	14'-2"	17'-3"
	F	1'-0"	1'-0"	1'-0"	1'-4"	1'-8"
	Batter, Z	1/2	1/2	1/2	1/2	1/2
	ⓐ bars	#5@12"	#5@12"	#5@12"	#5@6"	#6@6"
	ⓑ bars	#5@12"	#5@6"	#7@6"	#9@6"	#11@6"
Est'd Qtys	Concrete ft³/ft	10.0	15.1	20.4	31.0	43.8
	Reinf lb/ft	34	57	96	174	290
Max Toe Pressure (ksf)	Slope ≤ 3:1 @ 0.40g	1.3	1.8	2.4	3.0	3.7
	Slope ≤ 2:1 @ 0.15g	1.4	2.0	2.7	3.4	4.2

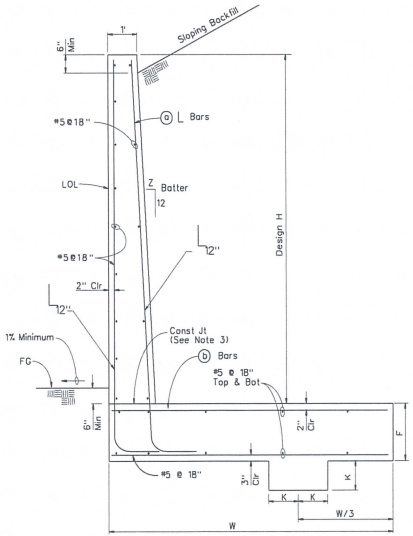

TYPICAL SECTION: TYPE 2

STANDARD BAR LAPS		
BAR#	UNCOATED	EPOXIED
4	20"	24"
5	26"	30"
6	31"	36"
7	39"	45"
8	51"	60"
9	64"	78"
10	82"	98"
11	100"	120"

REINFORCED CONCRETE RETAINING WALL TYPES 2A & 2B						
BACKFILL CONDITION	WALL TYPE REQUIRED FOR SEISMIC ACCELERATION					
	0.00G	0.15G	0.25G	0.35G	0.40G	0.50G
Level Backfill w/surcharge	2A	2A	2A	2A	2A	2A
Sloping Backfill w/o surcharge						
Slope ≤ 4:1	2A	2A	2A, 2B	2B	2C	2D
4:1 Slope ≤ 3:1	2A	2A, 2B	2C	2D	2E	*
3:1 Slope ≤ 2.1	2A, 2B	2E	*	*	*	*

* Requires special design

NEVADA DEPARTMENT OF TRANSPORTATION

TYPES 2A THRU 2E
CANTILEVER CONCRETE
RETAINING WALL

Signed Original On File	B-30.1.3 (502)	
CHIEF BRIDGE ENGINEER	ADOPTED 12/02	REVISION 7/04

Standard Plans Change Request

Requests for modifying the Standard Plans for Road and Bridge Construction must be submitted to:

NDOT Specifications Division
Attn: Standards and Manuals Supervisor
1263 South Stewart Street
Carson City, Nevada 89712

Standard Sheet No.: B-30.1.3 Page No.: B-24 Note: A separate form is required for each change.

Description of requested modification or correction: Revised notes for AASHTO LRFD Specifications. (Please attach supporting information).

Reason for request: Use AASHTO LRFD Specifications required by FHWA.

Requestor Information: Name: Troy Martin Phone: 888-7380

For Standards/Manuals Personnel Only: ☐ Approved ☐ Denied

Revised by: Signature: _____ Date: _____

Policy Review:
☐ CADD Standards ☐ ASTM ☐ AASHTO ☐ Design Manual ☐ Specifications

Reviewed by: Signature: _____ Date: _____

Notes:

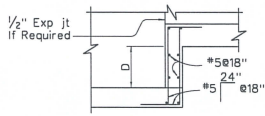

FOOTING STEP ELEVATION

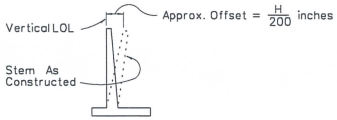

APPROXIMATE WALL OFFSET VALUES

Alternate Values For Offsetting Forms To Be Determined By The Structures Engineer

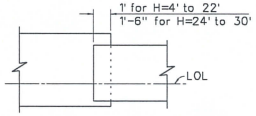

FOOTING STEP PLAN

GENERAL NOTES:

1. Design Specifications: AASHTO LRFD Bridge Design Specifications, 6th Edition 2012.
2. Loading: Live load surcharge pressure equal to 2 feet of earth.

   Seismic Acceleration = 0.15g, 0.25g, 0.35g, 0.40g and 0.50g, where 1/2 the peak ground acceleration is used in the design.
3. Concrete: All concrete shall be class A or AA modified (major) with f'c = 4 ksi at 28 days.
4. Reinforcing Steel: All reinforcing steel shall be ASTM A615 grade 60 or A706.
5. Design Data: Cantilevered Walls are designed based on the following parameters.

   Soil Properties:

   Internal Angle of Friction = 32 degrees
   Unit Weight = 0.120 kcf
   Cohesion = 0.200 ksf
   Equivalent Active Fluid Pressure = 0.036 kcf (Level Backfill)
   Equivalent Active Fluid Pressure = 0.060 kcf (2H: 1V Backfill)
   Equivalent Active Fluid Pressure = Rankine Method (Sloping Backfill)
   Equivalent Passive Fluid Pressure = 0.360 kcf (Top of Footing Down)
   Coefficient of Friction between Concrete Footing and Foundation Soil = 0.450
   Static + Seismic Earth Pressure Coefficient: K_ae: Mononobe-Okabe Method (If can be determined. Otherwise, special design required.)
6. Footing Steps: Footing steps not required unless shown in plans. For dimension (D), see project plans.
7. Return Walls: Return wall not required unless shown in plans. For dimension (D), see project plans.
8. Drainage: Drainage system (gutter, drain, pipe) not required unless specified in the plans.
9. Stability Factors (For check only):
   Static Overturning = 2.0
   Static Sliding = 1.5
   Seismic Overturning = 1.5
   Seismic Sliding = 1.1

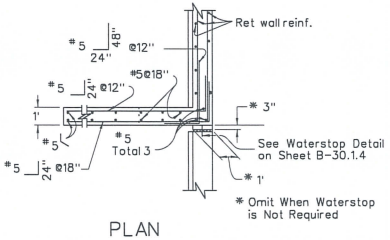

PLAN
For Return Wall Type A

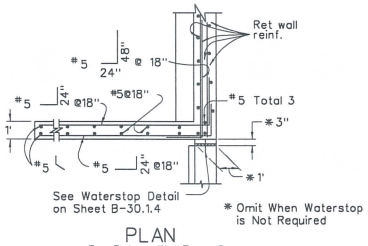

PLAN
For Return Wall Type C

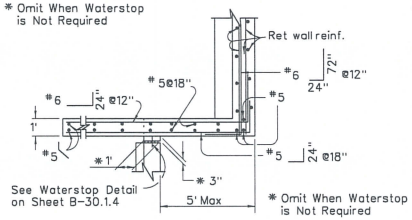

PLAN
For Return Wall Type B

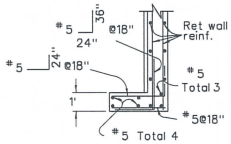

PLAN
For Return Wall Type D

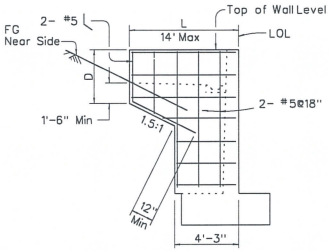

ELEVATION
RETURN WALL TYPE A
Use Where H=8' or Less

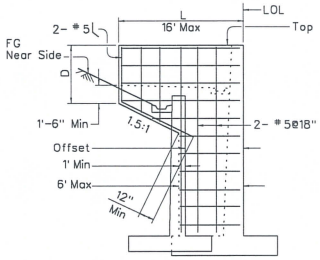

ELEVATION
RETURN WALL TYPE B
Use Where H=10' or More On Offset Walls

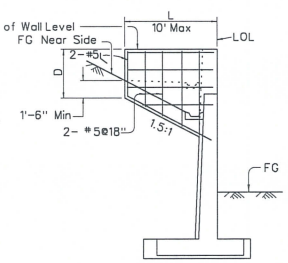

ELEVATION
RETURN WALL TYPE C
Use Where H=10' or More On Straight Walls

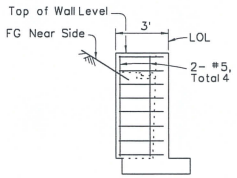

ELEVATION
RETURN WALL TYPE D
Use Where H=6' or Less

NEVADA DEPARTMENT OF TRANSPORTATION

CANTILEVER CONCRETE RETAINING WALL DETAILS No. 1

Signed Original On File	B-30.1.4	(502)
CHIEF BRIDGE ENGINEER	ADOPTED 12/02	REVISION 04/15

Standard Plans
New Request

Requests for additions to the Standard Plans for Road and Bridge Construction must be submitted to:

NDOT Design Division
Attn: Standards and Manuals Supervisor
1263 South Stewart Street
Carson City, Nevada 89712

Detail Name: Quiet rumble stripes

Note: A separate form is required for each standard detail.

Previously used: Contract Number: _____ Contract Sheet Numbers: _____
Note: If not previously used by NDOT you must provide drawings and other supporting documentation.

Comments:
Im requesting a new quitter "mumble" rumble stripe be included in the standard plans.
See attached information.

Requestor Information:
Name: Ken Mammen. Chief Traffic Safety Engineer
Phone: 888-7335
For Standards/Manuals Personnel Only: ☐ Approved ☐ Denied

Sheet Number: _____ Sheet Title: _____

Createded by: Signature: _____ Date: _____

Policy Review:
☐ CADD Standards ☐ ASTM ☐ AASHTO ☐ Design Manual ☐ Specifications

Reviewed by: Signature: _____ Date: _____

Notes: .....

Shoulder Rumble Strips

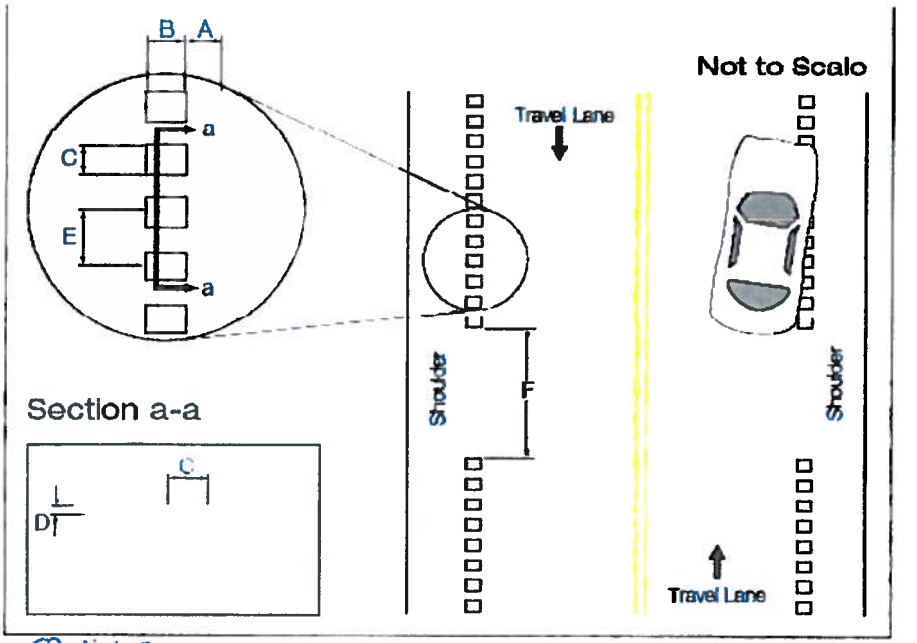

QUITE

[redacted] Rumble Stripes

Note: No "A" Distance

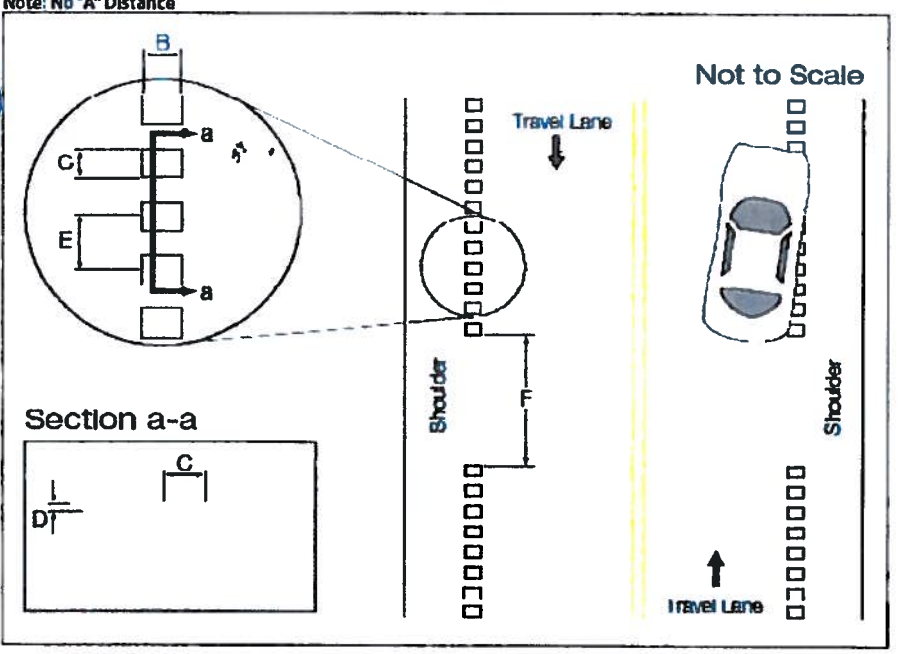

B = 1'

C = 7"

D = 1/32" to 5/8" *

E = 14"

F = 12'

12' gap every 48' If in Bicycle Routes

Legend								
→	=	Direction of Travel	B	=	Length	E	=	Spacing
▫▫▫	=	Rumble Strip	C	=	Width	F	=	Bicycle Gap
A	=	Offset	D	=	Depth			

Figure 1

* milling Depths must Vary each rumble.

Standard Plans
New Request

Requests for additions to the Standard Plans for Road and Bridge Construction must be submitted to:

NDOT Design Division
Attn: Standards and Manuals Supervisor
1263 South Stewart Street
Carson City, Nevada 89712

Detail Name: Bicycle rumble stripes

Note: A separate form is required for each standard detail.

Previously used: Contract Number: _____ Contract Sheet Numbers: _____
Note: If not previously used by NDOT you must provide drawings and other supporting documentation.

Comments:
Im requesting a new quitter "mumble" rumble stripe be included in the standard plans.
See attached information.

Requestor Information:
Name: Ken Mammen. Chief Traffic Safety Engineer
Phone: 888-7335
For Standards/Manuals Personnel Only: ☐ Approved ☐ Denied

Sheet Number: _____ Sheet Title: _____

Createded by: Signature: _____ Date: _____

Policy Review:
☐ CADD Standards ☐ ASTM ☐ AASHTO ☐ Design Manual ☐ Specifications

Reviewed by: Signature: _____ Date: _____

Notes: .....
.....
.....
.....
.....
.....
.....
.....

Shoulder Rumble Strips

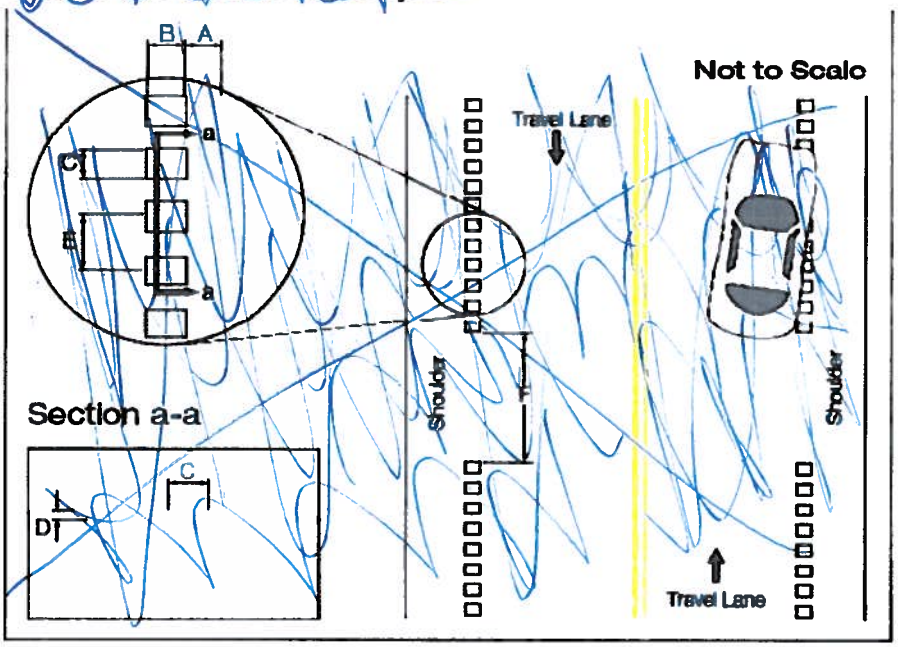

Edgeline Rumble Stripes

Note: No "A" Distance

A = 0" (standard is Rumble Stripe)
B = 5"
C = 6"
D = 0.375"
E = 12"
F = 12'
(48' Rumble + 12' gap = 60' cycle Length)

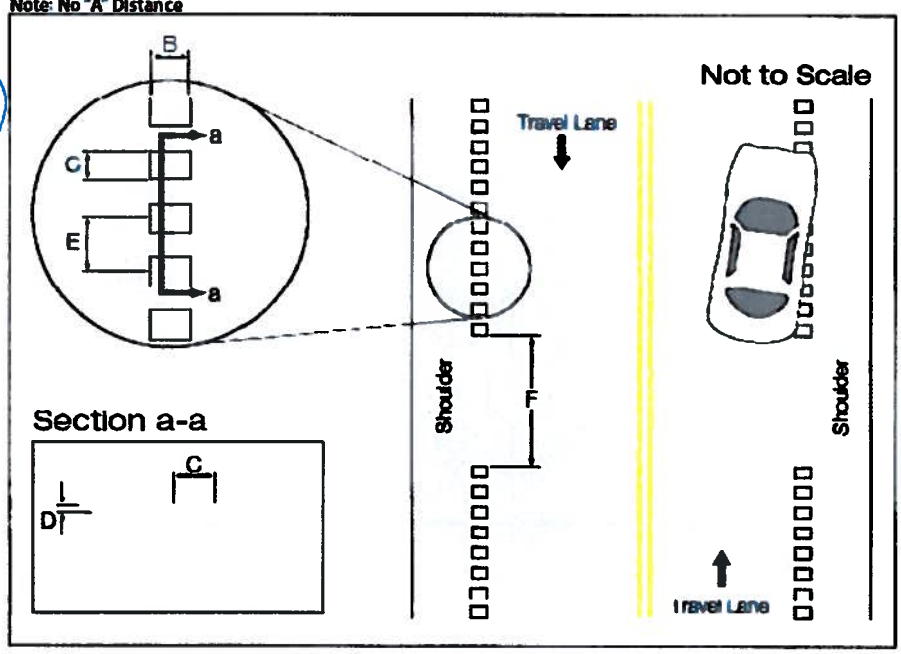

Legend

→	=	Direction of Travel	B	=	Length	E	=	Spacing
▭▭▭	=	Rumble Strip	C	=	Width	F	=	Bicycle Gap
A	=	Offset	D	=	Depth			

Figure 1

Standard Plans New Request

Requests for additions to the Standard Plans for Road and Bridge Construction must be submitted to:

NDOT Design Division
Attn: Standards and Manuals Supervisor
1263 South Stewart Street
Carson City, Nevada 89712

Detail Name: Type 1C Retaining Walls B-30.1.2
Note: A separate form is required for each standard detail.

Previously used: Contract Number: _____ Contract Sheet Numbers: _____
Note: If not previously used by NDOT you must provide drawings and other supporting documentation.

Comments: Add Type 1C Retaining walls to address more situations.

Requestor Information: Name: Troy Martin Phone: 888-7380

==========

For Standards/Manuals Personnel Only: ☐ Approved ☐ Denied

Sheet Number: _____ Sheet Title: _____

Createded by: Signature: _____ Date: _____

Policy Review:
☐ CADD Standards ☐ ASTM ☐ AASHTO ☐ Design Manual ☐ Specifications

Reviewed by: Signature: _____ Date: _____

Notes:

STANDARD BAR LAPS		
BAR #	UNCOATED	EPOXIED
4	20"	24"
5	26"	30"
6	31"	36"
7	39"	45"
8	51"	60"
9	64"	78"
10	82"	98"
11	100"	120"

TYPE 1B – REINFORCED CONCRETE RETAINING WALL
TABLE OF DIMENSIONS AND REINFORCING STEEL

Layout and reinforcement data	Design H	4'	6'	8'	10'	12'	14'	16'	18'	20'	22'	24'	26'	28'	30'
	W	4'-1"	6'-2"	8'-2"	10'-6"	12'-2"	14'-0"	16'-0"	18'-3"	20'-6"	22'-10"	25'-0"	27'-7"	30'-0"	32'-9"
	F	1'-0"	1'-0"	1'-0"	1'-4"	1'-4"	1'-4"	1'-8"	2'-0"	2'-6"	3'-2"	3'-8"	4'-4"	5'-2"	6'-2"
	C	1'-2"	1'-8"	2'-2"	2'-8"	3'-4"	4'-0"	4'-10"	5'-8"	6'-8"	7'-8"	8'-10"	10'-0"	11'-2"	12'-4"
	K	0	0	0	0	1'-0"	1'-0"	1'-6"	1'-6"	1'-9"	2'-0"	2'-0"	2'-0"	2'-0"	2'-0"
	Batter, Z	1/2	1/2	1/2	1/2	1/2	1/2	1/2	1/2	1/2	5/8	3/4	7/8	7/8	1
	ⓐ bars	–	–	–	–	–	–	–	–	#5@18"	#5@18"	#5@12"	#5@12"	#5@12"	#5@12"
	ⓑ bars	–	–	–	–	#5@12"	#5@12"	#5@6"	#5@6"	#6@6"	#6@6"	#7@6"	#7@6"	#8@6"	#8@6"
	ⓒ bars	#5@12"	#5@12"	#5@12"	#5@6"	#6@6"	#7@6"	#8@6"	#9@6"	#10@6"	#11@6"	#11@6"	#11@6"	2-#9@6" ⋈	2-#10@6" ⋈
	ⓓ bars	#5@12"	#5@12"	#5@6"	#5@6"	#7@6"	#8@6"	#9@6"	#9@6"	#9@6"	#9@6"	#10@6"	#10@6"	#10@6"	#10@6"
	ⓔ bars	#5@12"	#5@12"	#5@12"	#5@12"	#5@6"	#5@6"	#6@6"	#6@6"	#7@6"	#7@6"	#8@6"	#8@6"	#8@6"	#9@6"
	Key Bars	None	None	None	None	#5@18"	#5@18"	#5@18"	#5@18"	#5@18"	#5@18"	#5@18"	#5@18"	#6@18"	#6@18"
	L_1	–	–	–	–	5'-0"	6'-0"	6'-6"	7'-0"	7'-6"	8'-0"	8'-6"	9'-0"	9'-6"	10'-0"
	L_2	–	–	–	–	–	–	–	–	14'-0"	15'-6"	17'-0"	18'-6"	20'-6"	22'-0"
Est'd Qtys	Concrete ft^3/ft	8.5	13.0	17.5	26.1	34.3	39.8	52.5	65.8	84.9	113.0	139.7	176.2	217.6	275.5
	Reinf lbs/ft	33	47	70	104	169	222	333	402	520	625	790	868	1,052	1,318
Max Toe Pressure (ksf)	Slope ≤ 4:1 @ 0.25g	0.8	1.0	1.3	1.6	1.8	2.0	2.3	2.5	2.7	3.1	3.3	3.5	3.9	4.3
	Slope ≤ 4:1 @ 0.35g	0.9	1.1	1.4	1.8	2.0	2.3	2.6	2.8	3.1	3.5	3.8	4.1	4.5	4.9
	Slope ≤ 4:1 @ 0.40g	0.9	1.2	1.5	1.9	2.2	2.4	2.8	3.1	3.4	3.8	4.1	4.4	4.8	5.3
	Slope ≤ 4:1 @ 0.50g	1.0	1.4	1.7	2.2	2.5	2.8	3.2	3.6	4.0	4.5	4.8	5.2	5.7	6.3
	Slope ≤ 3:1	0.7	0.9	1.1	1.4	1.6	1.7	1.9	2.1	2.3	2.6	2.7	2.9	3.2	3.6
	Slope ≤ 3:1 @ 0.15g	0.8	1.0	1.3	1.6	1.9	2.1	2.3	2.6	2.8	3.2	3.4	3.6	4.0	4.4
	Slope ≤ 3:1 @ 0.25g	0.9	1.2	1.5	1.9	2.1	2.4	2.7	3.0	3.3	3.7	4.0	4.3	4.7	5.1
	Slope ≤ 3:1 @ 0.35g	1.0	1.4	1.7	2.2	2.5	2.8	3.2	3.6	4.0	4.4	4.8	5.2	5.7	6.2
	Slope ≤ 3:1 @ 0.40g	1.1	1.5	1.9	2.4	2.8	3.1	3.6	4.0	4.5	5.0	5.4	5.8	6.4	7.0

⋈ Denotes a bundle of two bars

TYPE 1C – REINFORCED CONCRETE RETAINING WALL
TABLE OF DIMENSIONS AND REINFORCING STEEL

Layout and reinforcement data	Design H	4'	6'	8'	10'	12'	14'	16'	18'	20'	22'	24'	26'	28'	30'
	W	4'-0"	6'-2"	8'-2"	10'-5"	12'-4"	14'-0"	16'-3"	18'-7"	20'-9"	22'-11"	25'-5"	27'-9"	30'-6"	33'-2"
	F	1'-0"	1-0'''	1'-0"	1'-4"	1'-4"	1'-4"	1'-9"	2'-3"	2'-8"	3'-3"	4'-0"	4'-8"	5'-7"	6'-6"
	C	1'-4"	1'-10"	2'-4"	2'-10"	3'-6"	4'-2"	5'-0"	5'-10"	6'-10"	7'-10"	9'-0"	10'-2"	11'-4"	12'-6"
	K	0	0	0	1'-0"	1'-0"	1'-6"	1'-9"	2'-0"	2'-4"	2'-8"	2'-8"	2'-10"	2'-10"	2'-10"
	Batter, Z	1/2	1/2	1/2	1/2	1/2	1/2	1/2	1/2	1/2	5/8	3/4	7/8	7/8	1
	ⓐ bars	–	–	–	–	–	–	–	–	#5@18"	#5@18"	#5@12"	#5@12"	#5@12"	#5@12"
	ⓑ bars	–	–	–	–	#5@12"	#5@12"	#6@12"	#5@6"	#5@6"	#6@6"	#7@6"	#8@6"	#9@6"	#9@6"
	ⓒ bars	#5@12"	#5@12"	#5@12"	#5@6"	#6@6"	#7@6"	#7@6"	#8@6"	#9@6"	#10@6"	#10@6"	#10@6"	#11@6"	2-#9@6" ⋈
	ⓓ bars	#5@12"	#5@12"	#5@6"	#5@6"	#7@6"	#8@6"	#9@6"	#9@6"	#9@6"	#10@6"	#10@6"	#10@6"	#10@6"	#10@6"
	ⓔ bars	#5@12"	#5@12"	#5@12"	#5@6"	#5@6"	#6@6"	#6@6"	#7@6"	#7@6"	#7@6"	#8@6"	#8@6"	#8@6"	#9@6"
	Key Bars	none	none	none	#5@18"	#5@18"	#5@18"	#5@18"	#5@18"	#5@18"	#5@18"	#6@18"	#6@18"	#6@18"	#5@12"
	L_1	–	–	–	–	5'-6"	6'-0"	6'-6"	7'-0"	7'-6"	8'-0"	8'-6"	9'-0"	9'-6"	10'-0"
	L_2	–	–	–	–	–	–	–	–	14'-0"	15'-6"	17'-0"	18'-6"	20'-6"	22'-0"
Est'd Qtys	Concrete ft^3/ft	8.4	13.0	17.5	29.0	34.5	41.3	55.1	72.6	90.7	117.1	151.7	188.7	235.4	291.6
	Reinf lb/ft	33	48	70	111	169	237	306	402	476	626	756	857	955	1117
Max Toe Pressure (ksf)	Slope ≤ 2:1	0.8	1.1	1.4	1.8	2.0	2.2	2.6	2.9	3.2	3.5	3.9	4.2	4.6	5.0
	Slope ≤ 2:1 @ 0.15g	1.1	1.5	1.9	2.5	2.9	3.3	3.8	4.3	4.7	5.2	5.7	6.2	6.8	7.4

⋈ Denotes a bundle of two bars

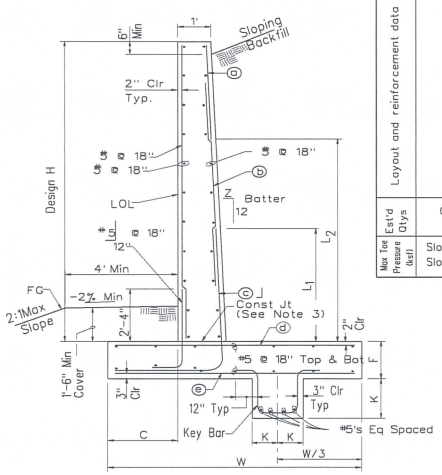

TYPICAL SECTION: TYPES 1B & 1C

NOTES:

1. FOR GENERAL NOTES SEE B-30.1.3
2. FOR DETAILS NOT SHOWN AND DRAINAGE REQUIREMENTS SEE SHEETS B-30.1.3 THRU B30-1.5.
3. ROUGHEN CONSTRUCTION JOINT SURFACE TO 1/4" AMPLITUDE.
4. GEOTECHNICAL ENGINEER WILL VERIFY MAXIMUM ALLOWABLE BEARING PRESSURES FOR ACTUAL SITE SOIL CONDITIONS.

NEVADA DEPARTMENT OF TRANSPORTATION

TYPES 1B & 1C
CANTILEVER CONCRETE
RETAINING WALLS

Signed Original On File — B-30.1.2 (502)
CHIEF BRIDGE ENGINEER — ADOPTED 12/02 — REVISION 7/04

Standard Plans
New Request

Requests for additions to the Standard Plans for Road and Bridge Construction must be submitted to:

NDOT Design Division
Attn: Standards and Manuals Supervisor
1263 South Stewart Street
Carson City, Nevada 89712

Detail Name: _Smooth ~~4~~ 3-wire fence_____
Note: A separate form is required for each standard detail.

Previously used: Contract Number: __Lots_____ Contract Sheet Numbers: _____
Note: If not previously used by NDOT you must provide drawings and other supporting documentation.

Comments: All I see is barbed wire fencing in the standard plans. Barbed wire fences are the rare exception, if we even use them at all now. Change or remove existing fence plans that use barbed wire

Requestor Information: Name: _Chris Young/ Env Srvcs_____ Phone: __x7687_____

==========

For Standards/Manuals Personnel Only: ☐ Approved ☐ Denied

Sheet Number: _____ Sheet Title: _____

Created by: Signature: _____ Date: _____

Policy Review:
☐ CADD Standards ☐ ASTM ☐ AASHTO ☐ Design Manual ☐ Specifications

Reviewed by: Signature: _____ Date: _____

Notes: .....

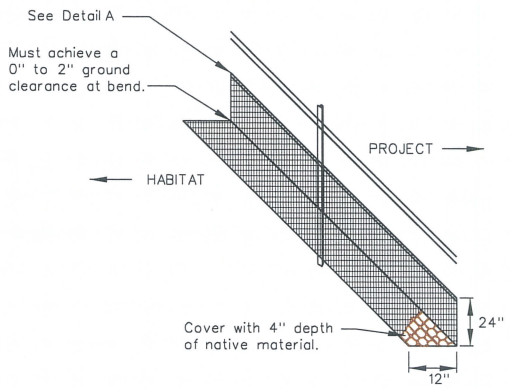

BENT TORTOISE FENCE

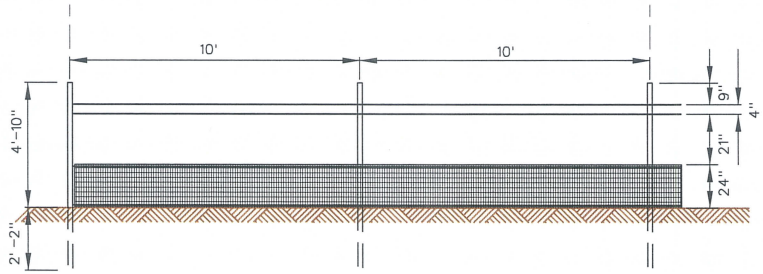

TYPE A-3S W/ TORTOISE FENCE ELEVATION

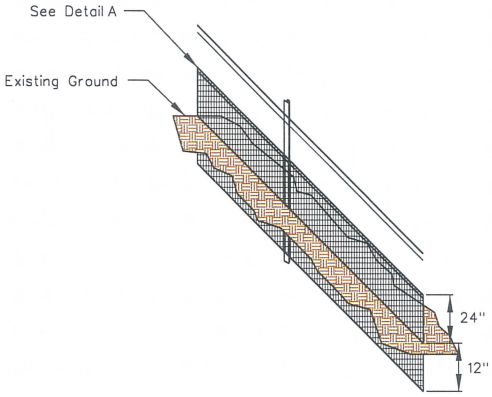

BURIED TORTOISE FENCE

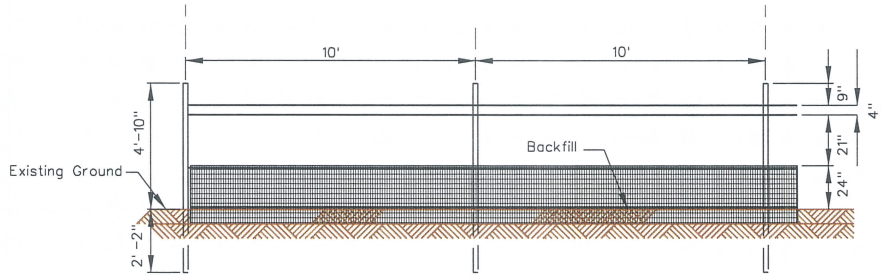

TYPE A-3S W/ TORTOISE FENCE ELEVATION

NOTES:

1. Tortoise fence to be attached on the habitat side of the fence.
2. Top of tortoise fence to be attached to bottom strand smooth wire with hog rings at 1 foot maximum spacing.
3. Tie tortoise fence to all posts at original ground and 9 inch max. spacing with wire ties.
4. For details not shown see sheets R-6.1.1, R-6.1.2 and R-6.3.2.1.
5. Fence can be moved a maximum of 2 feet inside R/W to accommodate locations where any portion of tortoise fence may encroach upon public or private lands.
6. Tie fence into new or existing culverts and tortoise guards when determined necessary to allow tortoise passage underneath roadways.
7. When attaching tortoise fence to existing R/W fence adjust height of wire strand so that it can be attached to the top of the tortoise fence using hog rings.
8. Ditch shall be backfilled with excavated material and compacted as directed by the engineer. (ditch work may require hand digging)
9. In areas of difficult trenching tortoise fence is to be bent 90° towards the habitat side of the fence and covered with a minimum of 4 inches native material.
10. Metal drive gates shall be constructed as shown on sheet R-6.1.3.
11. Tortoise fence to be installed on the habitat side of the gate and attached with hog rings at 1 foot max. spacing.
12. Bottom of tortoise fence to be installed 1 inch max from ground on the gate.

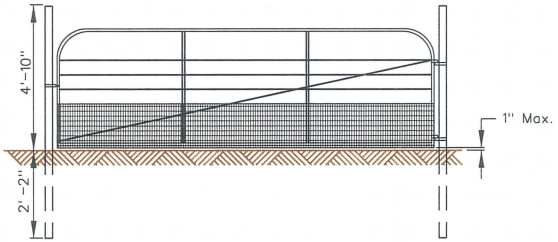

METAL DRIVE GATE

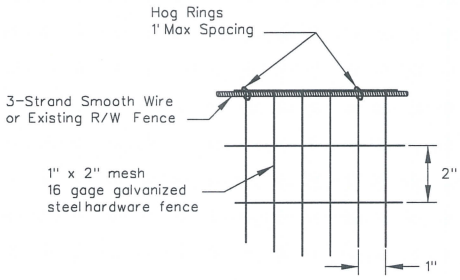

DETAIL A

STATE OF NEVADA
DEPARTMENT OF TRANSPORTATION

TYPE A-3S
WITH TORTOISE FENCE

R-???	(???)	Signed Original On File
ADOPTED 11/86	REVISED 5/09	CHIEF ROAD DESIGN ENGR.

R-???

Standard Plans
New Request

Requests for additions to the Standard Plans for Road and Bridge Construction must be submitted to:

NDOT Design Division
Attn: Standards and Manuals Supervisor
1263 South Stewart Street
Carson City, Nevada 89712

Detail Name: _~~Desert~~ Tortoise Guard_____
Note: A separate form is required for each standard detail.

Previously used: Contract Number: _____ Contract Sheet Numbers: _____
Note: If not previously used by NDOT you must provide drawings and other supporting documentation.

Comments: …Used on BC Bypass District contract. See attached drawing ……...
……
……
……
……
……
……
……
……
……
……
……

Requestor Information: Name: _Chris Young/ Env Srvcs_____ Phone: __x7687_____

==========

For Standards/Manuals Personnel Only: ☐ Approved ☐ Denied

Sheet Number: _____ Sheet Title: _____

Createded by: Signature: _____ Date: _____

Policy Review:
☐ CADD Standards ☐ ASTM ☐ AASHTO ☐ Design Manual ☐ Specifications

Reviewed by: Signature: _____ Date: _____

Notes: ……
……
……
……
……
……
……
……

STATE	PROJECT NO.	COUNTY	SHEET NO.
NEVADA	PROJECT1	COUNTY1	SHT99

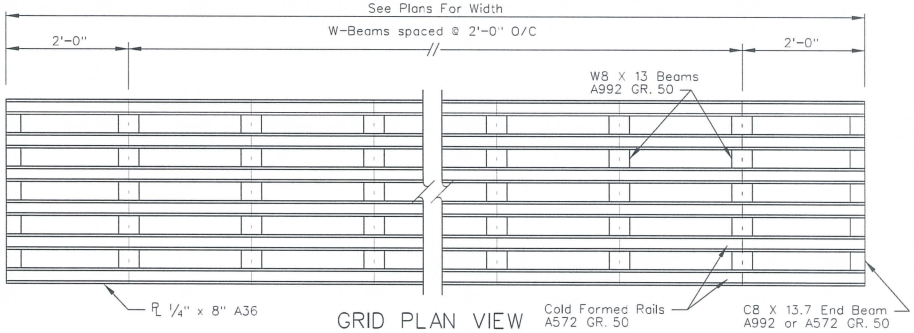

GRID PLAN VIEW

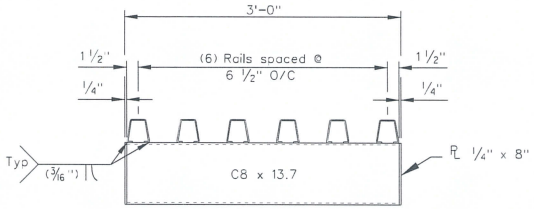

GRID END VIEW

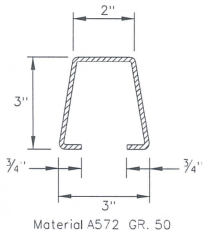

RAIL CROSS SECTION

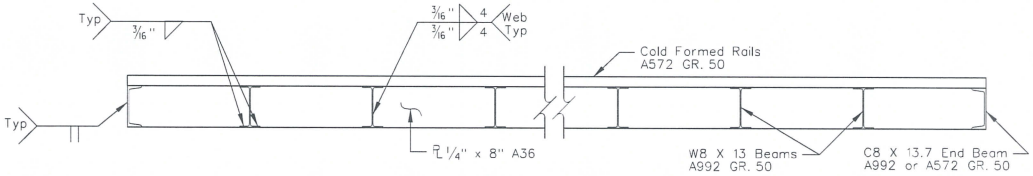

GRID ELEVATION

NOTES:

1. Design is in accordance with AASHTO LRFD Bridge Design Specifications 6th Edition.
2. Reference specification: Steel Construction Manual 13th Edition.
3. Design vehicle: HL-93, owner specified vehicles: HS20, HS25, U80.
4. No.4 Reinforcement may be spliced with 24 inch lap.
5. F62 Inserts - bolt diameter & threads/in. 1 inch 8nc with 4 5/8 inch height.
6. F62 Inserts will be wired or welded to internal rebar to ensure they do not pull out when lifting foundation base.
7. F45 Cap plugs will be installed in F62 inserts to keep out dirt, concrete, etc.

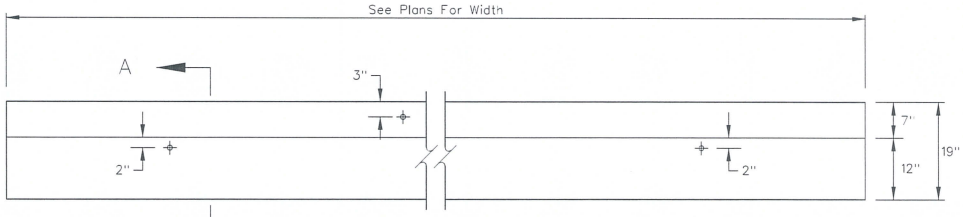

FOUNDATION PLAN VIEW

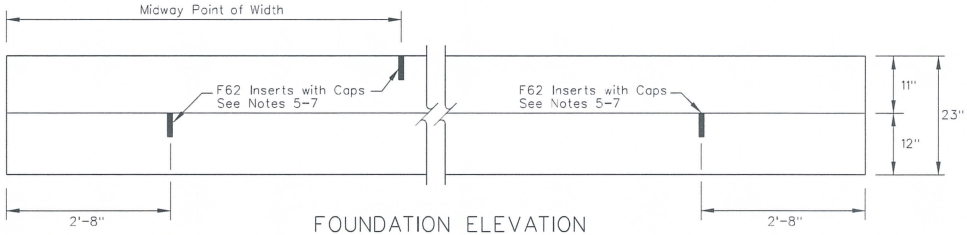

FOUNDATION ELEVATION

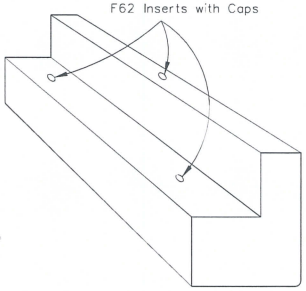

ISOMETRIC

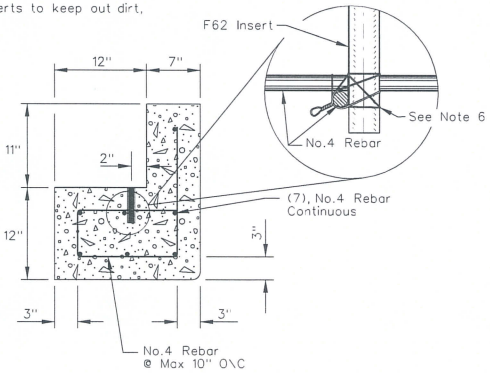

SECTION A-A

Pg 1 of 2

STATE OF NEVADA
DEPARTMENT OF TRANSPORTATION

SPECIAL DETAIL TORTOISE GUARD AND FOUNDATION

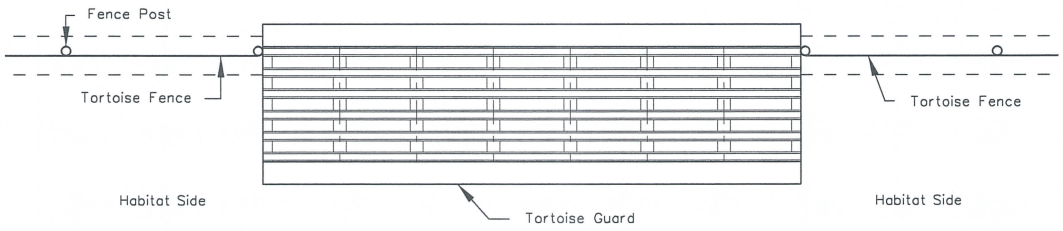

PLAN

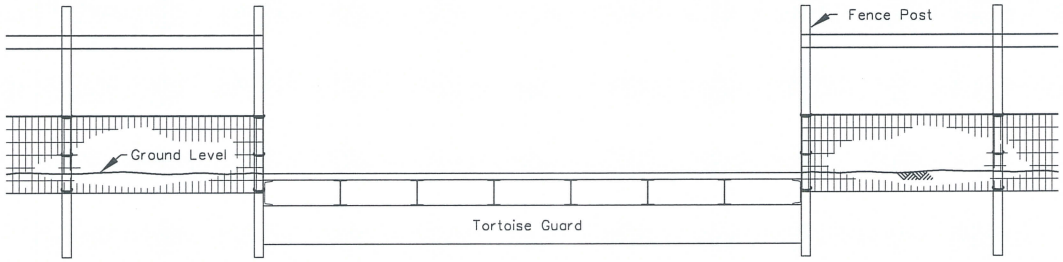

ELEVATION

Ps 2 of 2

STATE OF NEVADA
DEPARTMENT OF TRANSPORTATION

TORTOISE GUARD

R-???	(???)	Signed Original On File
ADOPTED 11/86	REVISED 5/09	CHIEF ROAD DESIGN ENGR.

R-222

Standard Plans
New Request

Requests for additions to the Standard Plans for Road and Bridge Construction must be submitted to:

NDOT Design Division
Attn: Standards and Manuals Supervisor
1263 South Stewart Street
Carson City, Nevada 89712

Detail Name: _96 inch Wildlife Fencing _____
Note: A separate form is required for each standard detail.

Previously used: Contract Number: _Silverzone & HD Summit Contract Sheet Numbers: _____
Note: If not previously used by NDOT you must provide drawings and other supporting documentation.

Comments: NDOT is incorporating wildlife over and under crossings into our projects as a matter of practice.
.....
.....
.....
.....
.....
.....
.....
.....
.....
.....

Requestor Information: Name: _Chris Young/ Env Srvcs_____ Phone: __x7687_____

==========

For Standards/Manuals Personnel Only: ☐ Approved ☐ Denied

Sheet Number: _____ Sheet Title: _____

Created by: Signature: _____ Date: _____

Policy Review:
☐ CADD Standards ☐ ASTM ☐ AASHTO ☐ Design Manual ☐ Specifications

Reviewed by: Signature: _____ Date: _____

Notes: .....
.....
.....
.....
.....
.....
.....
.....

STATE	PROJECT NO.	COUNTY	SHEET NO.
NEVADA	IM-080-5(036)	ELKO	SD3

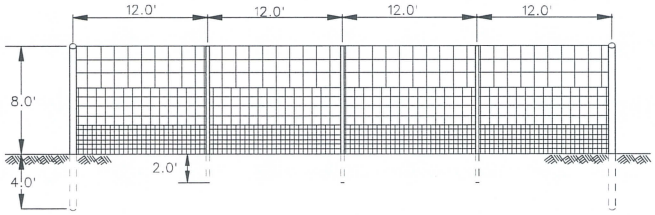

LINE POST

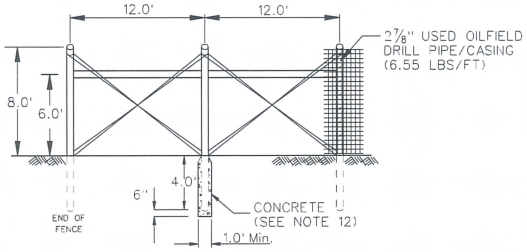

END POST

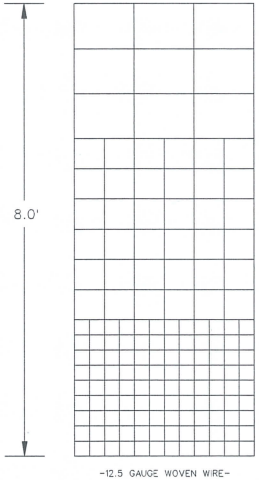

ANIMAL EXCLUSIONARY
GAME FENCE (FIELD FENCE)

GENERAL NOTES

1. FENCE TO CONSIST OF 96" TALL, 12.5 GAUGE WOVEN WIRE ANIMAL EXCLUSIONARY GAME FENCE (FIELD FENCE). FENCE TO BE A MINIMUM OF 7.5' AT LOWEST POINT.
2. FENCE WIRE TO BE PLACED ON THE FIELD SIDE OF POSTS.
3. AT EACH LOCATION WHERE AN ELECTRIC TRANSMISSION, DISTRIBUTION OR SECONDARY LINE CROSSES FENCE, THE CONTRACTOR SHALL FURNISH AND INSTALL A GROUND CONFORMING TO SECTION 9 OF THE NATIONAL ELECTRIC SAFETY CODE. (NBS HANDBOOK 81).
4. MAIN SUPPORT POST ARE TO BE SPACED 48' AND ARE TO BE 12' LONG USED OILFIELD DRILL PIPE/CASING WITH A 2 3/8" MINIMUM DIAMETER (4.43 LBS/FT).
5. CROSS MEMBERS ARE TO BE USED OILFIELD DRILL PIPE/CASING WITH A 2 3/8" MINIMUM DIAMETER.
6. 10' STEEL T-POSTS (GRADE 133) ARE TO BE USED BETWEEN MAIN SUPPORTS AT 12' INTERVALS (SEE LINE POST DETAIL).
7. END POST, CORNER POST, AND LINE BRACE POST SHALL BE ASSEMBLED BY THE UNIT AND PAID FOR AS SUCH. ALL WORK AND MATERIAL ASSOCIATED WITH EACH ASSEMBLY SHALL BE INCLUDED IN THE UNIT PRICE FOR THAT ASSEMBLY.
8. PIPE CONNECTORS, AS WELL AS FASTENERS TO ATTACH FENCE TO PIPE, ARE TO BE INCLUDED IN THE UNIT PRICE FOR EACH ASSEMBLY.
9. ALL FENCE WIRE TIES, BRACE WIRES, STAPLES, AND OTHER WIRE APPURTENANCES SHALL BE GALVANIZED IN ACCORDANCE WITH AASHTO M 232.
10. FENCE POSTS TO BE BACKFILLED WITH CLASS AA CONCRETE OR PEA GRAVEL AS NECESSARY.

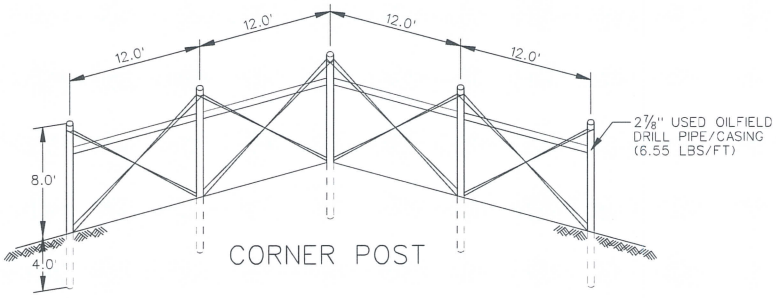

CORNER POST

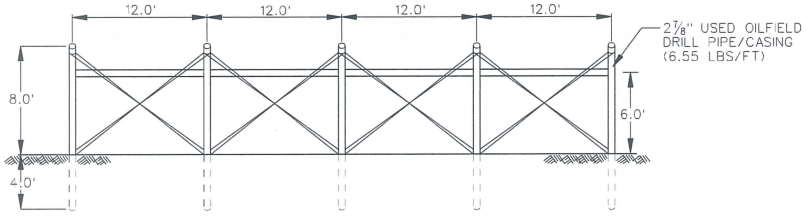

LINE BRACE

TO BE INSTALLED AT LEAST EVERY 1320 FT

STATE OF NEVADA
DEPARTMENT OF TRANSPORTATION

SPECIAL DETAIL
DEER PROOF FENCE

STATE	PROJECT NO.	COUNTY	SHEET NO.
NEVADA	IM-080-5(036)	ELKO	SD4

GENERAL NOTES

1. FENCE TO CONSIST OF 96" TALL, 12.5 GAUGE WOVEN WIRE ANIMAL EXCLUSIONARY GAME FENCE (FIELD FENCE).
2. FENCE WIRE TO BE PLACED ON THE FIELD SIDE OF POSTS.
3. 2" X 8" BOARDS THAT RETAIN FILL MATERIAL FOR JUMP OUTS ARE TO BE SECURED TO POSTS ON THE ROAD SIDE.
4. JUMP OUTS WILL UTILIZE 6 INCH DIAMETER WOOD POSTS AND CROSS MEMBERS AT THE SPACING INDICATED.
5. ALL FENCE WIRE TIES, BRACE WIRES, STAPLES, AND OTHER WIRE APPURTENANCES SHALL BE GALVANIZED IN ACCORDANCE WITH AASHTO M 232.
6. RAMPS TO BE COMPOSED OF BORROW COMPACTED TO 90%.
7. ALL WOOD IS TO BE TREATED PER SECTION 710.07 OF THE STANDARD SPECIFICATIONS.
8. PLEASE CALL LORI BELLIS AT (775)888-7035, 10 WORKING DAYS PRIOR TO CONSTRUCTING THE JUMP OUTS FOR EXACT PLACEMENT.

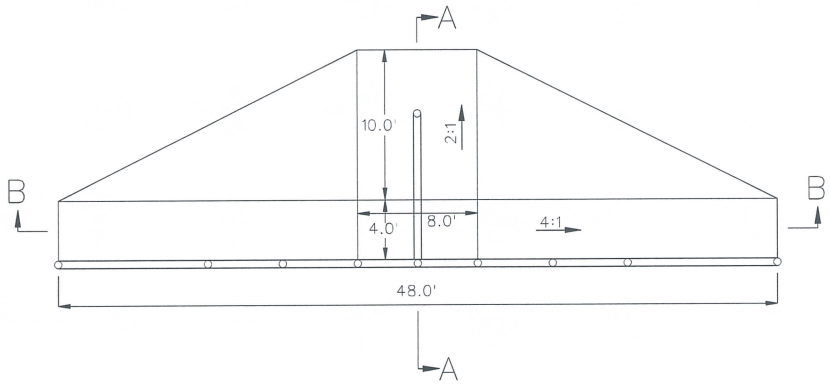

PLAN VIEW

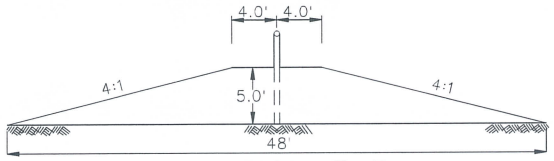

SECTION B-B

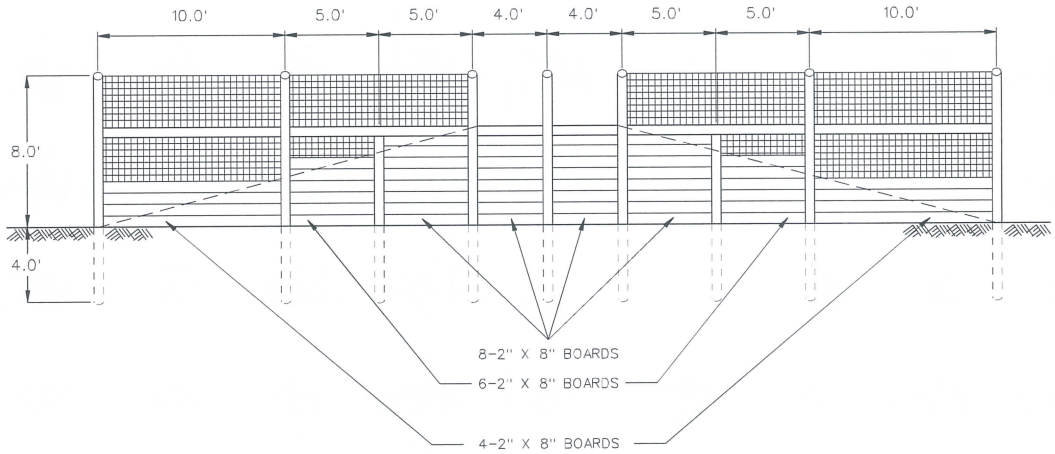

PROFILE VIEW

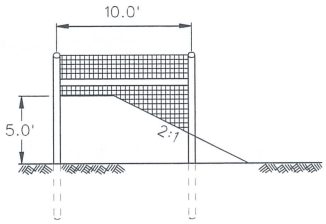

SECTION A-A

STATE OF NEVADA
DEPARTMENT OF TRANSPORTATION

SPECIAL DETAIL
DEER JUMP OUTS

Standard Plans
New Request

Requests for additions to the Standard Plans for Road and Bridge Construction must be submitted to:

NDOT Design Division
Attn: Standards and Manuals Supervisor
1263 South Stewart Street
Carson City, Nevada 89712

Detail Name: ___6 in Barrier Saddle Bracket (Round Post) _____
Note: A separate form is required for each standard detail.

Previously used: Contract Number: _____3554_____ Contract Sheet Numbers: _____TS52_____
Note: If not previously used by NDOT you must provide drawings and other supporting documentation.

Comments: …Microstation file and design is from the Structures Division
……
……
……
……
……
……
……
……
……
……
……

Requestor Information: Name: _____Jeannie Drown_____ Phone: ___888-7678_____

==========

For Standards/Manuals Personnel Only: ☐ Approved ☐ Denied

Sheet Number: _____ Sheet Title: _____

Createded by: Signature: _____ Date: _____

Policy Review:
☐ CADD Standards ☐ ASTM ☐ AASHTO ☐ Design Manual ☐ Specifications

Reviewed by: Signature: _____ Date: _____

Notes: ……
……
……
……
……
……
……
……

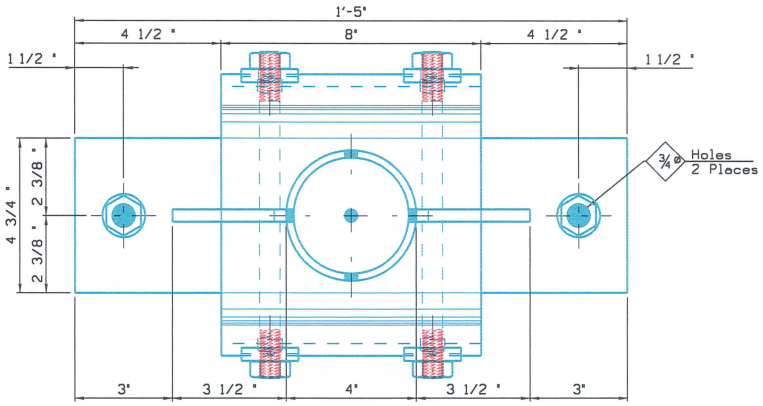
1'-5"
4 1/2 "
8"
4 1/2 "
1 1/2 "
1 1/2 "
4 3/4 "
2 3/8 "
2 3/8 "
3/4 ø Holes
2 Places
3"
3 1/2 "
4"
3 1/2 "
3"

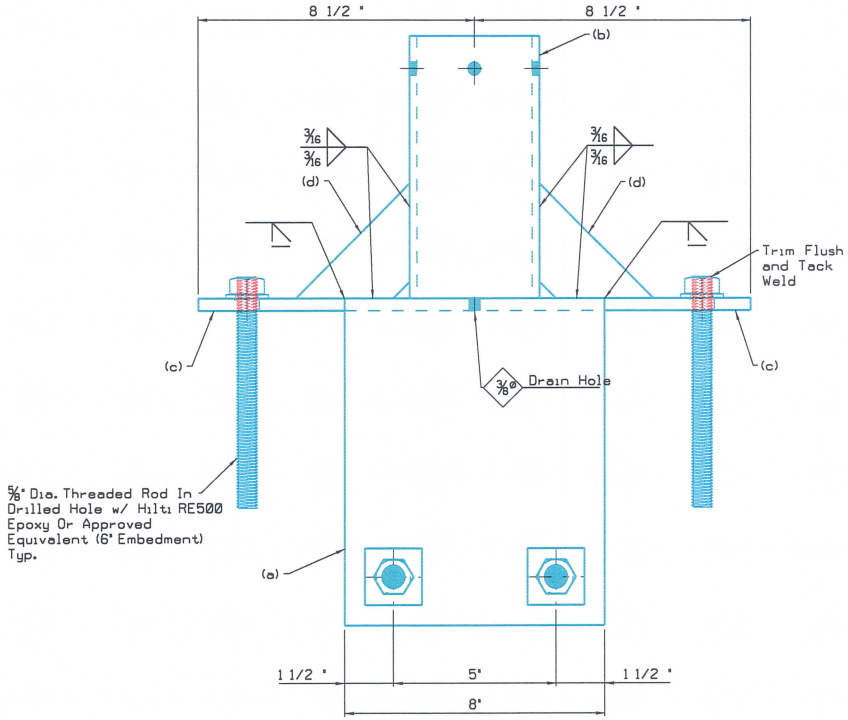
8 1/2 "
8 1/2 "
(b)
3/16
3/16
(d)
3/16
3/16
(d)
Trim Flush
and Tack
Weld
(c)
(c)
3/8 ø Drain Hole
5/8" Dia. Threaded Rod In
Drilled Hole w/ Hilti RE500
Epoxy Or Approved
Equivalent (6" Embedment)
Typ.
(a)
1 1/2 "
5"
1 1/2 "
8"

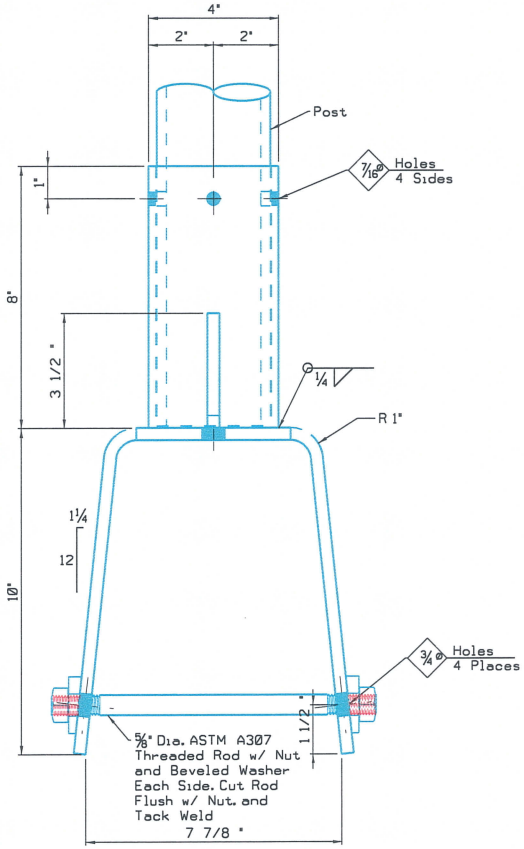
4"
2"
2"
Post
7/16 ø Holes
4 Sides
1"
8"
3 1/2 "
1/4
R 1"
1 1/4
12
10"
3/4 ø Holes
4 Places
1 1/2 "
5/8" Dia. ASTM A307
Threaded Rod w/ Nut
and Beveled Washer
Each Side. Cut Rod
Flush w/ Nut. and
Tack Weld
7 7/8 "

Standard Plans
New Request

Requests for additions to the Standard Plans for Road and Bridge Construction must be submitted to:

NDOT Design Division
Attn: Standards and Manuals Supervisor
1263 South Stewart Street
Carson City, Nevada 89712

Detail Name: ___6 in Barrier Saddle Bracket (Square Post) _____
Note: A separate form is required for each standard detail.

Previously used: Contract Number: _____ Contract Sheet Numbers: _____
Note: If not previously used by NDOT you must provide drawings and other supporting documentation.

Comments: …Microstation file and design is from the Structures Division
This detail would be used if mounting a sign on the barrier rail that requires a square post.

Requestor Information: Name: _____Jeannie Drown _____ Phone: ____888-7678_____

==========

For Standards/Manuals Personnel Only: ☐ Approved ☐ Denied

Sheet Number: _____ Sheet Title: _____

Createded by: Signature: _____ Date: _____

Policy Review:
☐ CADD Standards ☐ ASTM ☐ AASHTO ☐ Design Manual ☐ Specifications

Reviewed by: Signature: _____ Date: _____

Notes: ……

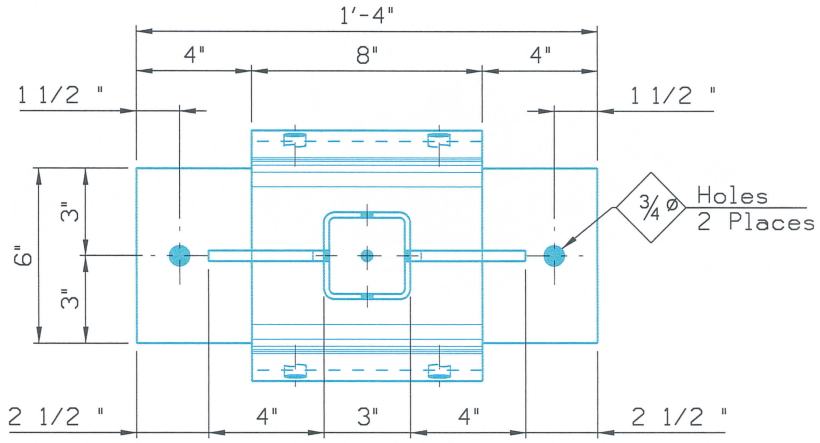
1'-4"
4"
8"
4"
1 1/2 "
1 1/2 "
6"
3"
3"
3/4 ø
Holes
2 Places
2 1/2 "
4"
3"
4"
2 1/2 "

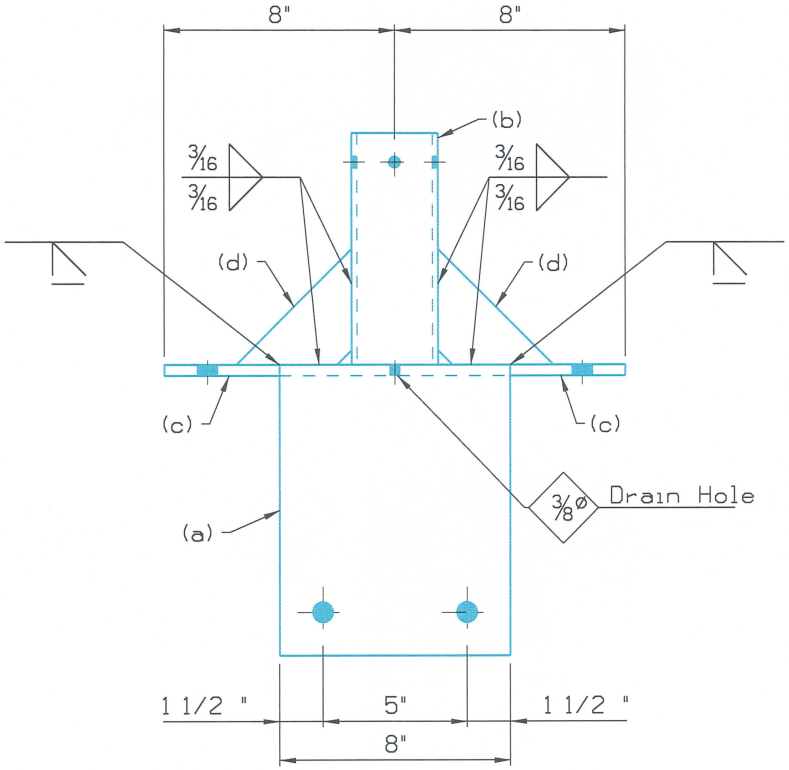
8"
8"
(b)
3/16
3/16
3/16
3/16
(d)
(d)
(c)
(c)
3/8 ø
Drain Hole
(a)
1 1/2 "
5"
1 1/2 "
8"

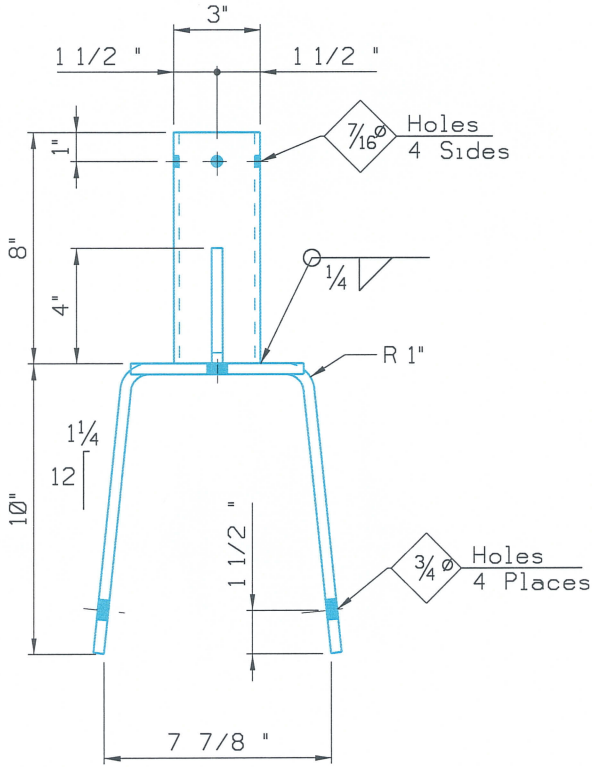
3"
1 1/2 "
1 1/2 "
7/16 ø
Holes
4 Sides
1"
8"
4"
1/4
R 1"
1 1/4
12
10"
1 1/2 "
3/4 ø
Holes
4 Places
7 7/8 "

Standard Plans New Request

Requests for additions to the Standard Plans for Road and Bridge Construction must be submitted to:

NDOT Design Division
Attn: Standards and Manuals Supervisor
1263 South Stewart Street
Carson City, Nevada 89712

Detail Name: ___Transverse Rumble Strips _____
Note: A separate form is required for each standard detail.

Previously used: Contract Number: _____3455_____ Contract Sheet Numbers: _____ SD-1_____
Note: If not previously used by NDOT you must provide drawings and other supporting documentation.

Comments: ……Actual typical not used in contract plans. Typical was used to create sheet SD-1……
……
……
……
……
……
……
……
……
……
……
……

Requestor Information: Name: ____Jeannie Drown_____ Phone: _____888-7678_____

==========

For Standards/Manuals Personnel Only: ☐ Approved ☐ Denied

Sheet Number: _____ Sheet Title: _____

Createded by: Signature: _____ Date: _____

Policy Review:
☐ CADD Standards ☐ ASTM ☐ AASHTO ☐ Design Manual ☐ Specifications

Reviewed by: Signature: _____ Date: _____

Notes: ……
……
……
……
……
……
……
……

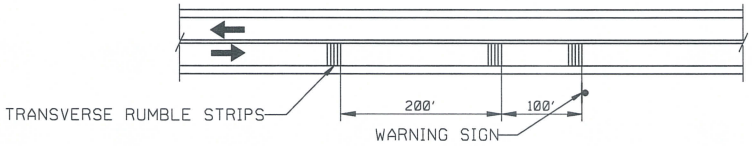

TYPICAL INSTALLATION

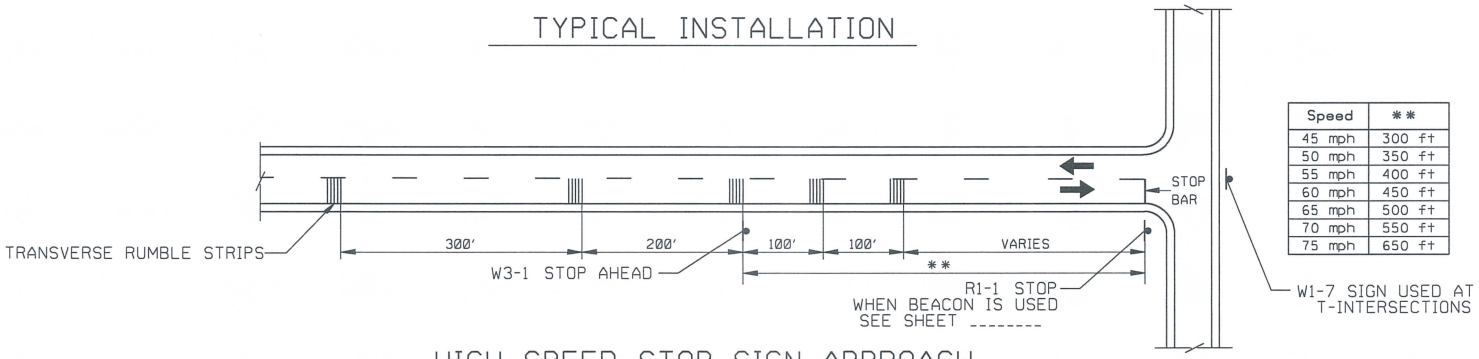

Speed	**
45 mph	300 ft
50 mph	350 ft
55 mph	400 ft
60 mph	450 ft
65 mph	500 ft
70 mph	550 ft
75 mph	650 ft

HIGH SPEED STOP SIGN APPROACH

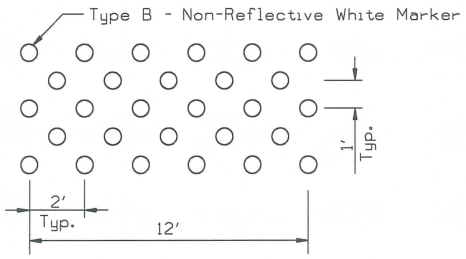

TRANSVERSE RUMBLE STRIP
(NON SNOW ZONE)

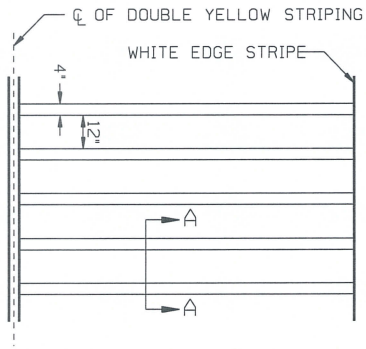

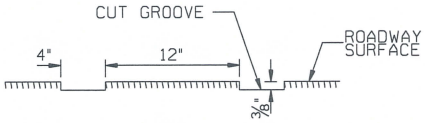

SECTION A-A

CUT GROOVE
TRANSVERSE RUMBLE STRIP
(SNOW ZONE)

NOTES:

1. SEE T-37.1.1 FOR RAISED PAVEMENT MARKER DETAILS
2. SPACING BETWEEN RUMBLE STRIPS MAY BE CHANGED AS DIRECTED BY THE ENGINEER.

NEVADA DEPARTMENT OF TRANSPORTATION

TRANSVERSE RUMBLE STRIP

Signed Original On File	T-XX.X.X	(633)
CHIEF SAFETY/TRAFFIC ENGR.	ADOPTED 2/79	REVISION 5/09

Standard Plans
New Request

Requests for additions to the Standard Plans for Road and Bridge Construction must be submitted to:

NDOT Design Division
Attn: Standards and Manuals Supervisor
1263 South Stewart Street
Carson City, Nevada 89712

Detail Name: ___Passing Lanes _____
Note: A separate form is required for each standard detail.

Previously used: Contract Number: 3415, 3539 &3551 Contract Sheet Numbers: ___Striping Sheets _____
Note: If not previously used by NDOT you must provide drawings and other supporting documentation.

Comments: …The typical was not actually shown in the contracts, but the passing lanes were designed using the typical.
……
……
……
……
……
……
……
……
……
……

Requestor Information: Name: ____Jeannie Drown_____ Phone: ____888-7678_____

==========

For Standards/Manuals Personnel Only: ☐ Approved ☐ Denied

Sheet Number: _____ Sheet Title: _____

Createded by: Signature: _____ Date: _____

Policy Review:
☐ CADD Standards ☐ ASTM ☐ AASHTO ☐ Design Manual ☐ Specifications

Reviewed by: Signature: _____ Date: _____

Notes: ……
……
……
……
……
……
……
……

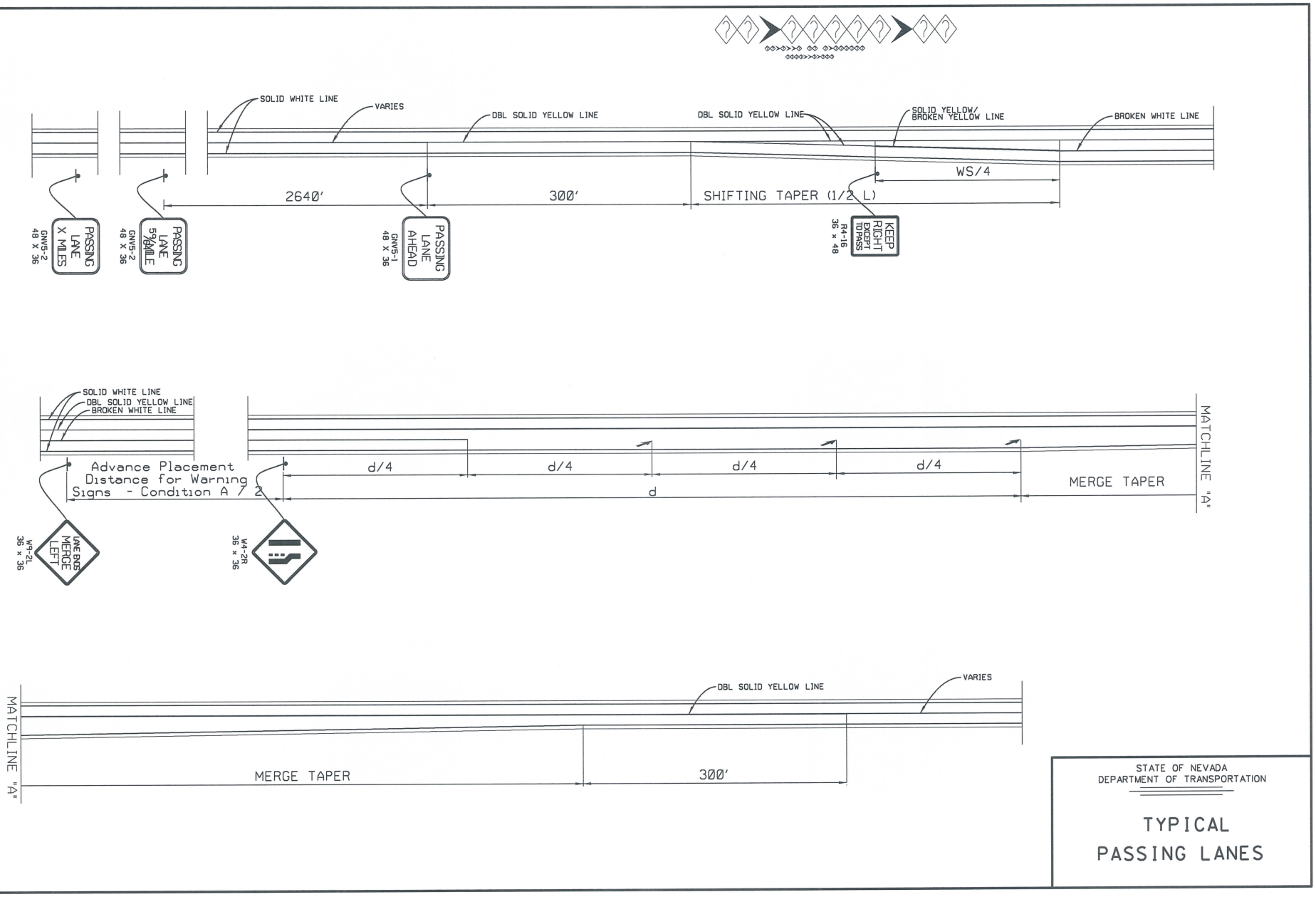

STATE OF NEVADA
DEPARTMENT OF TRANSPORTATION

TYPICAL PASSING LANES

Standard Plans New Request

Requests for additions to the Standard Plans for Road and Bridge Construction must be submitted to:

NDOT Design Division
Attn: Standards and Manuals Supervisor
1263 South Stewart Street
Carson City, Nevada 89712

Detail Name: Concrete Barrier Rail R-8.6.1.2
Note: A separate form is required for each standard detail.

Previously used: Contract Number: _____ Contract Sheet Numbers: _____
Note: If not previously used by NDOT you must provide drawings and other supporting documentation.

Comments: New 54" tall F shape barrier rail to provide bridge columns the protection required by the AASHTO LRFD Specifications when the columns cannot withstand the vehicular collision force.

Requestor Information: Name: Troy Martin Phone: 888-7380

==========

For Standards/Manuals Personnel Only: ☐ Approved ☐ Denied

Sheet Number: _____ Sheet Title: _____

Createded by: Signature: _____ Date: _____

Policy Review:
☐ CADD Standards ☐ ASTM ☐ AASHTO ☐ Design Manual ☐ Specifications

Reviewed by: Signature: _____ Date: _____

Notes:

STATE	PROJECT NO.	COUNTY	SHEET NO.
NEVADA	PROJECT1	COUNTY1	SHT99

CONCRETE BARRIER RAIL
LATERAL FLARE RATES

DESIGN SPEED	FLARE RATE
75 MPH	22:1
70 MPH	20:1
60 MPH	17:1
50 MPH	14:1
40 MPH	11:1
30 MPH	8:1

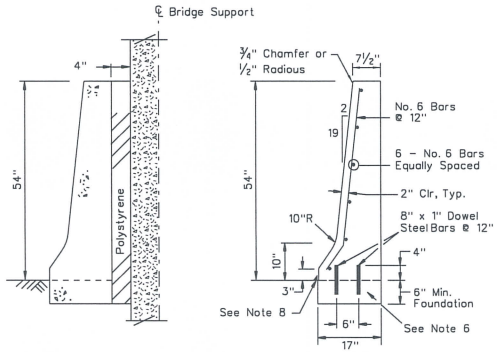

SPECIAL CONCRETE BARRIER RAIL

CONCRETE (FOR INFORMATION ONLY)

0.1765 yd^3. PER LIN. FT. WITH FOUNDATION

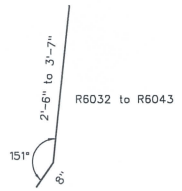

BENT BAR DETAIL

NOTES:

1. CONCRETE SHALL BE CLASS A OR AA MODIFIED WITH f'c = 4000 psi @ 28 DAYS.
2. ALL CONTACT JOINTS SHALL BE AT PLANNED SCORED JOINT LOCATIONS.
3. ALL JOINTS AND OTHER LOCATIONS NEEDING SEALING SHALL FOLLOW REQUIREMENT SET IN NDOT STANDARD PLANS.
4. FOR IMPACT ATTENUATOR ATTACHMENT DETAILS, SEE MANUFACTURERS DRAWING.

   FOR GUARDRAIL ENERGY ABSORBING TERMINAL ATTACHMENT SEE NDOT STANDARD PLANS.
5. LENGTH 5' FROM EDGE OF OBSTRUCTION. SEE CONTRACT PLANS FOR EXACT DIMENSIONS.
6. DEPTH OF 6" FOUNDATION SHALL BE CHECKED AND INCREASED AS NEEDED FOR FOUNDATION STABILITY. DOWELS ARE REQUIRED FOR FULL LENGTH OF THE SPECIAL CONCRETE BARRIER RAIL INCLUDING TRANSITION, REGARDLESS OF PAVING TYPE.
7. FOR TYPE FA CONCRETE BARRIER RAIL SEE NDOT STANDARD PLANS.
8. JOINT SEALER SHALL BE A SINGLE COMPONENT HOT APPLIED SEALANT 1" THICK. SEE NDOT STANDARD PLANS.
9. THE HEIGHT OF THE BARRIER RAIL SHALL BE MEASURED FROM THE TOP OF THE PLANTMIX BITUMINOUS SURFACE OR THE TOP OF CONCRETE PAVEMENT.
10. EXTEND REINFORCING AT HEIGHT TRANSITION UNTIL THE END OF THE REINFORCING IS 2 ½" CLEAR FROM THE FACE OF CONCRETE.

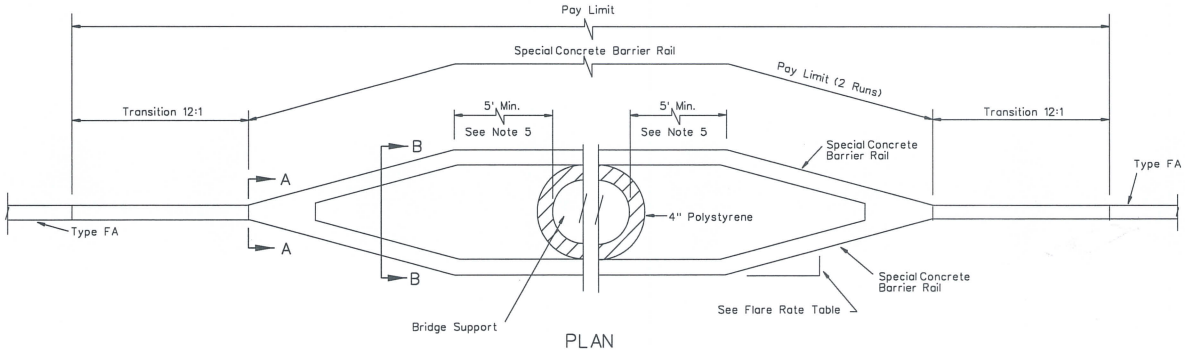

PLAN

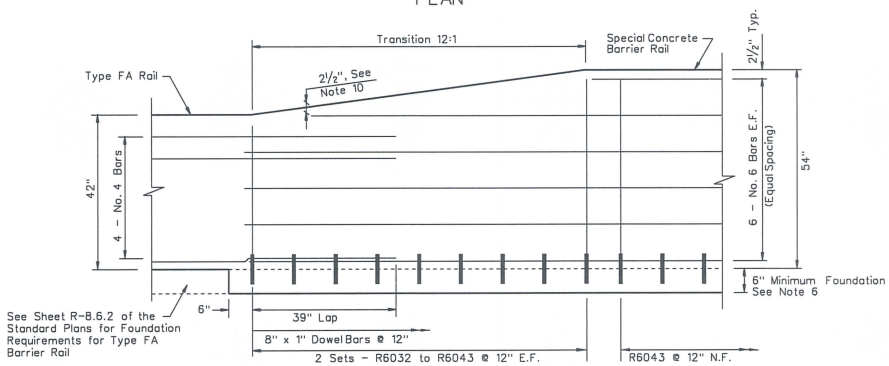

ELEVATION

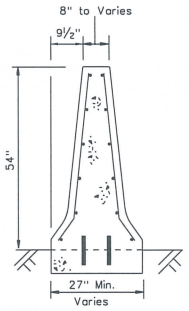

SECTION A–A

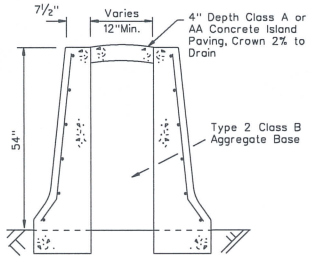

SECTION B–B

STATE OF NEVADA
DEPARTMENT OF TRANSPORTATION

SPECIAL DETAIL SPECIAL CONCRETE BARRIER RAIL

Dimit, Eric S

From: Eiche, John R
Sent: Tuesday, October 07, 2014 11:08 AM
To: Dimit, Eric S
Subject: FW: Special Barrier Sheet

From: Harrison, Nathan W
Sent: Tuesday, December 17, 2013 10:52 AM
To: Eiche, John R
Cc: Martin, Troy L
Subject: FW: Special Barrier Sheet

John,
I sent this email to Troy to summarize the requirements for going with the 54-inch rail. This is a draft document and has not been formalized as a memo yet so take it at face value. If you have any questions please let me know.
Nate

From: Harrison, Nathan W
Sent: Tuesday, November 19, 2013 7:32 AM
To: Martin, Troy L
Cc: Elicegui, Mark P
Subject: Special Barrier Sheet

Troy,
Here is a copy of the details for the 54-in. Special Concrete Barrier Rail that we have developed. It should be understood that NDOT currently does not have any crash tested 54-in. high rail at any test level (let alone TL-5) and the new Special Concrete Barrier Rail is based on requirements for the design of a test specimen. The text I have included below is an example of what I feel should be included in a memo or email advising structures design personnel of the changes required by the LRFD to satisfy its criteria for impact protection. Please feel free to make any changes that you feel necessary prior to distributing it and let me know if there is further discussion required.
Nate

The sixth edition of the LRFD (AASHTO, 2012) increased the requirements of the previous Code for Article 3.6.5.1 – Protection of Structures. The equivalent static force for the Vehicular Collision Force has been increased from 400 kips to 600 kips and the distance above ground at which the load acts has been changed from 4 feet to 5 feet. For piers or abutments located within a distance of 30 feet to the edge of the roadway, collision shall be addressed by either providing structural resistance or by redirecting or absorbing the collision load[1].

Consistent with previous versions of the LRFD, when the design choice is to redirect or absorb the collision load, protection shall consist of one of the following:

- An embankment;
- A structurally independent, crashworthy ground mounted 54-in. high barrier, located within 10 ft from the component being protected; or
- A 42-in. high barrier located at more than 10 ft from the component being protected.

The barrier shall be structurally and geometrically capable of surviving a TL-5 crash test as specified in Section 13 of the LRFD[1].

NDOT's standard Type FA concrete barrier rail satisfies the requirements of NCHRP Report 350 for a TL-5 barrier[2] and may be used as protection if located more than 10 ft from the component being protected. NDOT's Type FB concrete barrier rail does not satisfy the requirements for Article 3.6.5.1 and may no longer be used as impact protection for abutments and piers if within 10 feet of the component being protected.

Attached, are details for a "Special Concrete Barrier Rail" that are to be used as protection when the rail must be within 10 feet of an abutment or pier requiring protection. The new railing has been designed as a TL-5 crash test specimen in accordance with Appendix A13 of the LRFD.

References

1. AASHTO. 2012. *LRFD Bridge Design Specifications*, Sixth Edition and Interim Revisions, American Association of State Highway Transportation Officials, Washington, DC.
2. Horne, Dwight A. Memo to Resource Center Directors, Division Administrators and Federal Lands Highway Division Engineers, Federal Highway Administration, Washington, DC. 14 Feb. 2000.

2014 Standard Plans
New Request

Requests for additions to the Standard Plans for Road and Bridge Construction must be submitted to:

NDOT Design Division
Attn: Standards and Manuals Supervisor
1263 South Stewart Street
Carson City, Nevada 89712

Detail Name: CONCRETE BARRIER GORE TRANS.
Note: A separate form is required for each standard detail.

Previously used: Contract Number: _____ Contract Sheet Numbers: _____
Note: If not previously used by NDOT you must provide drawings and other supporting documentation.

Comments: .....

Requestor Information: Name: STANDARDS Phone: _____

==========

For Standards/Manuals Personnel Only: ☐ Approved ☐ Denied

Sheet Number: _____ Sheet Title: _____

Created by: Signature: _____ Date: _____

Policy Review:
☐ CADD Standards ☐ ASTM ☐ AASHTO ☐ Design Manual ☐ Specifications

Reviewed by: Signature: _____ Date: _____

Notes: .....

STATE	PROJECT NO.	COUNTY	SHEET NO.
NEVADA			X-XX

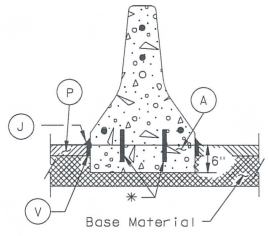

See Note 11
BITUMINOUS SECTION

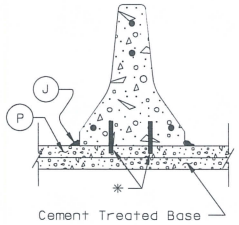

CONCRETE SECTION

SECTION A-A

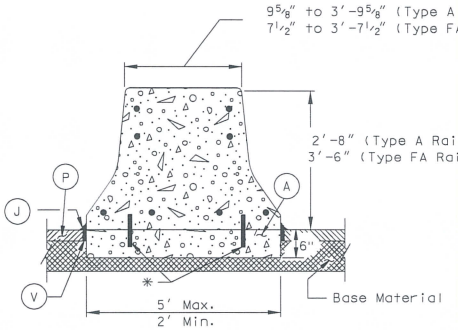

See Note 11
BITUMINOUS SECTION

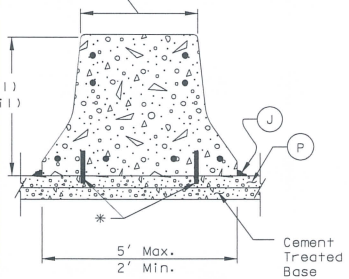

CONCRETE SECTION

SECTION B-B

LEGEND:

- (A) Anchor Pad
- (P) Pavement - See Note 8
- (J) Joint Sealer Typical See Note 4
- (V) Vertical Joint Sealer Typical See Note 3
- * 1"x 8" Steel Dowel @ 2' Centers if Needed - See Note 8
- ● No. 4 Bars - See Note 7
- ** Concrete Barrier Rail End Anchors Are Not Needed Here

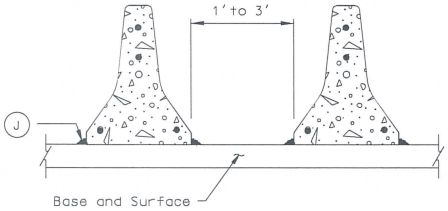

SECTION C-C

NOTES:

1. Concrete shall be class A or AA.
2. For details not shown, see sheets R-8.6.1 and R-8.6.2.
3. Vertical joints shall have a single component hot applied sealant full depth of joint.
4. Joint sealer shall be a single component hot applied sealant 1" thick.
5. The height of the barrier rail shall be measured from the top of the plantmix bituminous surface or the top of concrete pavement.
6. See plan sheets for exact dimensions.
7. Reinforcing Steel: Use 4 - No. 4 bars continuous in Type A and Type FA, concrete barrier rail.
   a. Use 8 - No. 4 bars continuous thru the joint into the gore transition.
   b. Use 4 - No. 4 bars continuous thru the end of the structure.
8. Bituminous Paving Requirements: The anchor pads shall be constructed under the entire structure. At the contractors option, anchor pad and barrier gore transition may be placed monolithically, in which case the dowels may be eliminated.

   Concrete Paving Requirements: Dowels are required under the entire structure. The surface of the concrete shall be cleaned prior to placement of the barrier gore transition. At the contractors option, concrete pavement and barrier gore transition may be placed monolithically, in which the case dowels may be eliminated.
9. For impact attenuator attachment details, see manufacturer's drawings. Dimensions of this section may vary due to manufacturer's requirements. Approval at the discretion of the engineer.
10. Match barrier gore transition dimensions to barrier rail type. When both Type A rail and Type FA rail are used, match gore transition dimensions to Type FA rail and use a Type A rail to Type FA rail transition to connect the Type A rail. (see special detail). If portable precast concrete barrier rail is used, the rail must be drilled and pinned at the barrier gore transition. See sheet R-8.7.1 for details.
11. Depth of anchor pad shall be checked and increased as needed for foundation stability.

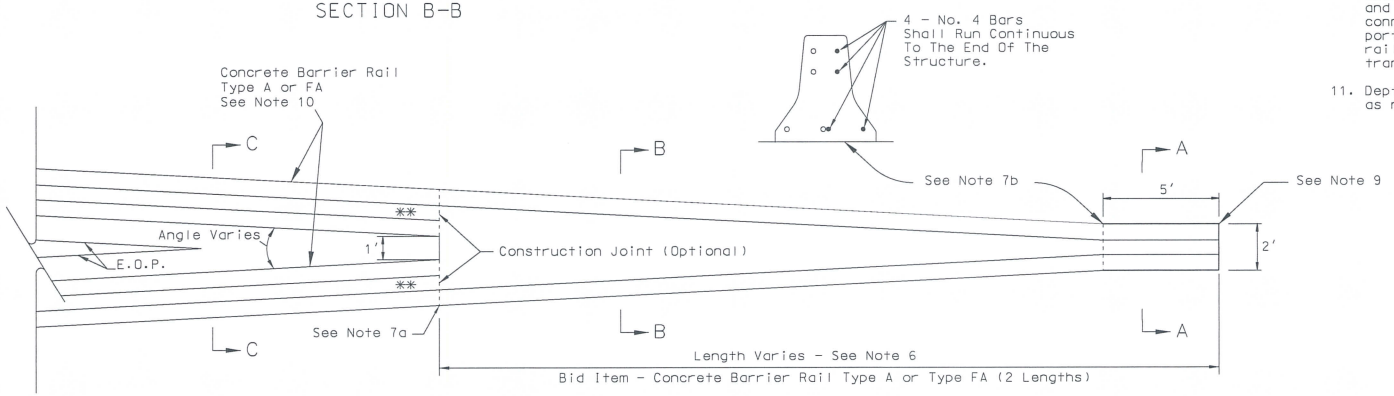

PLAN

STATE OF NEVADA
DEPARTMENT OF TRANSPORTATION

SPECIAL DETAIL CONCRETE BARRIER GORE TRANSITION

2014 Standard Plans New Request

Requests for additions to the Standard Plans for Road and Bridge Construction must be submitted to:

NDOT Design Division
Attn: Standards and Manuals Supervisor
1263 South Stewart Street
Carson City, Nevada 89712

Detail Name: GUARDRAIL POST IN PAVEMENT
Note: A separate form is required for each standard detail.

Previously used: Contract Number: _____ Contract Sheet Numbers: _____
Note: If not previously used by NDOT you must provide drawings and other supporting documentation.

Comments: .....

Requestor Information: Name: STANDARDS Phone: _____

==========

For Standards/Manuals Personnel Only: ☐ Approved ☐ Denied

Sheet Number: _____ Sheet Title: _____

Created by: Signature: _____ Date: _____

Policy Review:
☐ CADD Standards ☐ ASTM ☐ AASHTO ☐ Design Manual ☐ Specifications

Reviewed by: Signature: _____ Date: _____

Notes: .....

STATE	PROJECT NO.	COUNTY	SHEET NO.
NEVADA			X-XX

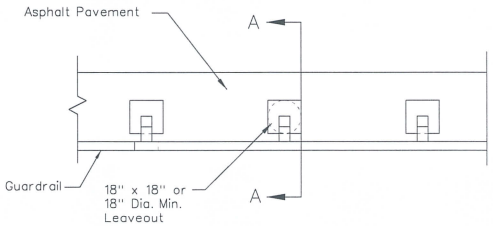

PLAN

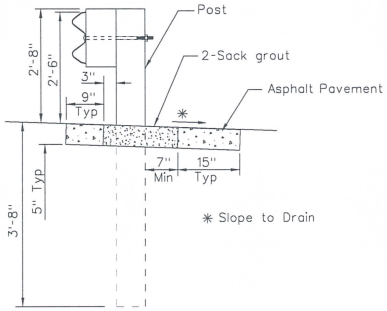

SECTION A-A

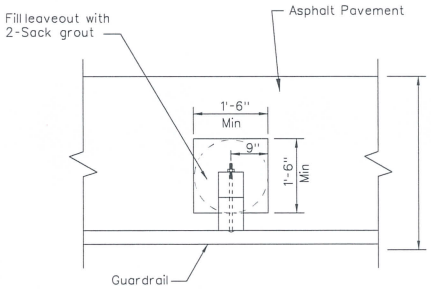

STATE OF NEVADA
DEPARTMENT OF TRANSPORTATION

SPECIAL DETAIL GUARDRAIL POST IN PAVEMENT

Standard Plans
New Request

Requests for additions to the Standard Plans for Road and Bridge Construction must be submitted to:

NDOT Design Division
Attn: Standards and Manuals Supervisor
1263 South Stewart Street
Carson City, Nevada 89712

Detail Name: _____Barrier-Guardrail Marking Details _____
Note: A separate form is required for each standard detail.

Previously used: Contract Number: _____ Contract Sheet Numbers: _____
Note: If not previously used by NDOT you must provide drawings and other supporting documentation.

Comments: .....
.....
.....
.....
.....
.....
.....
.....
.....
.....
.....
.....

Requestor Information: Name: _____Jeannie Drown_____ Phone: _____888-7678_____

==========

For Standards/Manuals Personnel Only: ☐ Approved ☐ Denied

Sheet Number: _____ Sheet Title: _____

Createded by: Signature: _____ Date: _____

Policy Review:
☐ CADD Standards ☐ ASTM ☐ AASHTO ☐ Design Manual ☐ Specifications

Reviewed by: Signature: _____ Date: _____

Notes: .....
.....
.....
.....
.....
.....
.....
.....

STATE	PROJECT NO.	COUNTY	SHEET NO.
NEVADA	PROJECT1	COUNTY1	SHT99

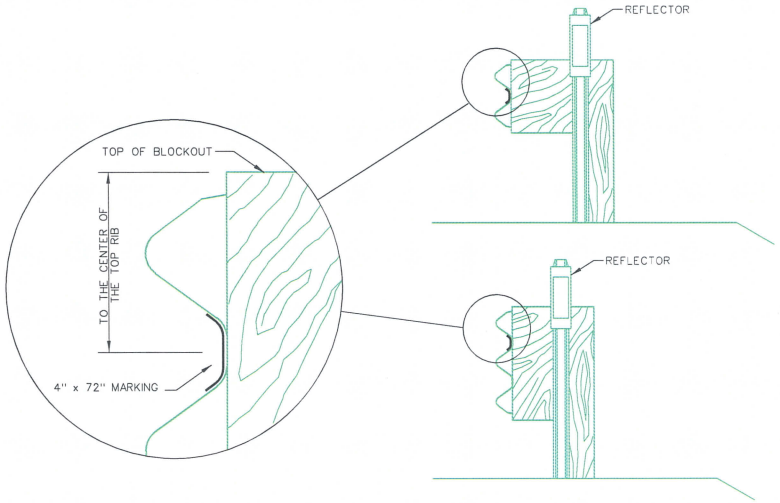

TYPES OF GUARDRAIL SYSTEM

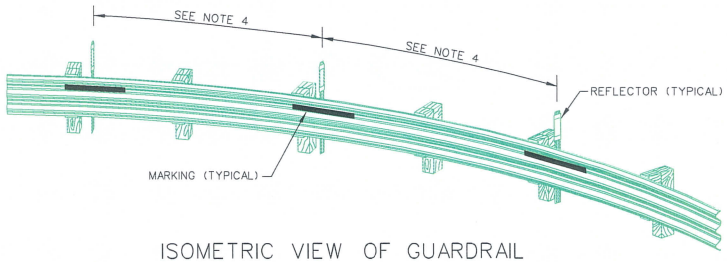

ISOMETRIC VIEW OF GUARDRAIL

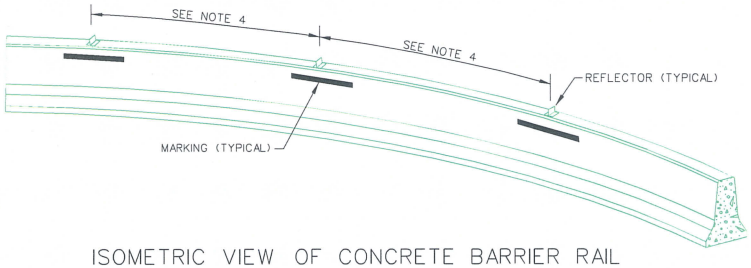

ISOMETRIC VIEW OF CONCRETE BARRIER RAIL

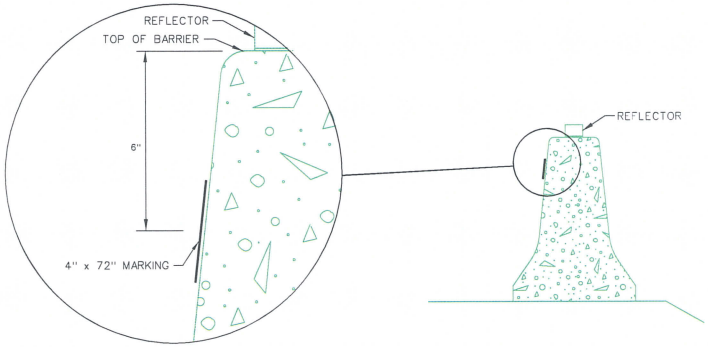

CONCRETE BARRIER RAIL

NOTES

1. CENTER THE 72" LONG BY 4" WIDE MARKINGS WITH RAIL REFLECTORS OR GUIDE POST.
2. MARKINGS SHALL BE PLACED ON OUTSIDE OF THE RADIUS FROM P.C. TO THE P.T.
3. OMIT MARKINGS FOR A RADIUS OF CURVE GREATER THAN 1250'.
4. SEE STANDARD PLAN R-9.2.2 FOR REFLECTOR SPACING ON GUARDRAIL / BARRIER RAIL.
5. COLOR: SHALL COMPLY WITH THE GUIDELINES ESTABLISHED BY THE CURRENTLY ADOPTED M.U.T.C.D.

STATE OF NEVADA
DEPARTMENT OF TRANSPORTATION

SPECIAL DETAIL BARRIER RAIL, GUARDRAIL MARKINGS

2014 Standard Plans New Request

Requests for additions to the Standard Plans for Road and Bridge Construction must be submitted to:

NDOT Design Division
Attn: Standards and Manuals Supervisor
1263 South Stewart Street
Carson City, Nevada 89712

Detail Name: RUMBLE STRIP FOR PCCP
Note: A separate form is required for each standard detail.

Previously used: Contract Number: _____ Contract Sheet Numbers: _____
Note: If not previously used by NDOT you must provide drawings and other supporting documentation.

Comments: .....

Requestor Information: Name: STEVE OXOBY Phone: 742-7224

==========

For Standards/Manuals Personnel Only: ☐ Approved ☐ Denied

Sheet Number: _____ Sheet Title: _____

Created by: Signature: _____ Date: _____

Policy Review:
☐ CADD Standards ☐ ASTM ☐ AASHTO ☐ Design Manual ☐ Specifications

Reviewed by: Signature: _____ Date: _____

Notes: .....

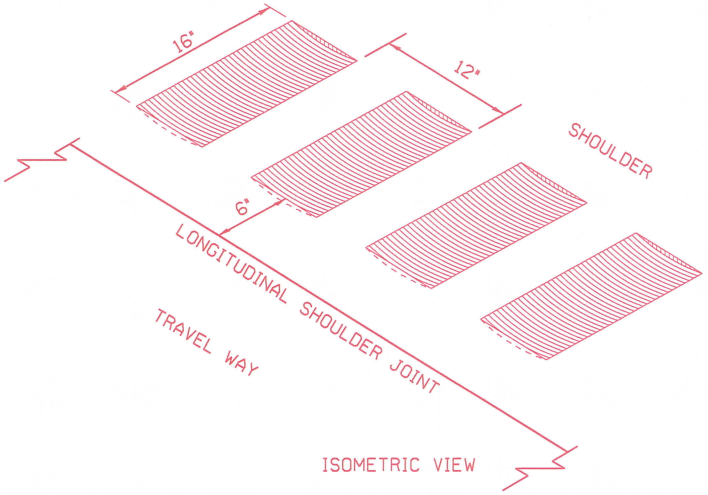

NOTES:
1. ALL RUMBLE STRIP CORRUGATION SHALL BE 6" FROM ANY CONCRETE JOINT.
2. FOR DETAILS NOT SHOWN, SEE STD. R-10.1.4 AND R-10.1.5.

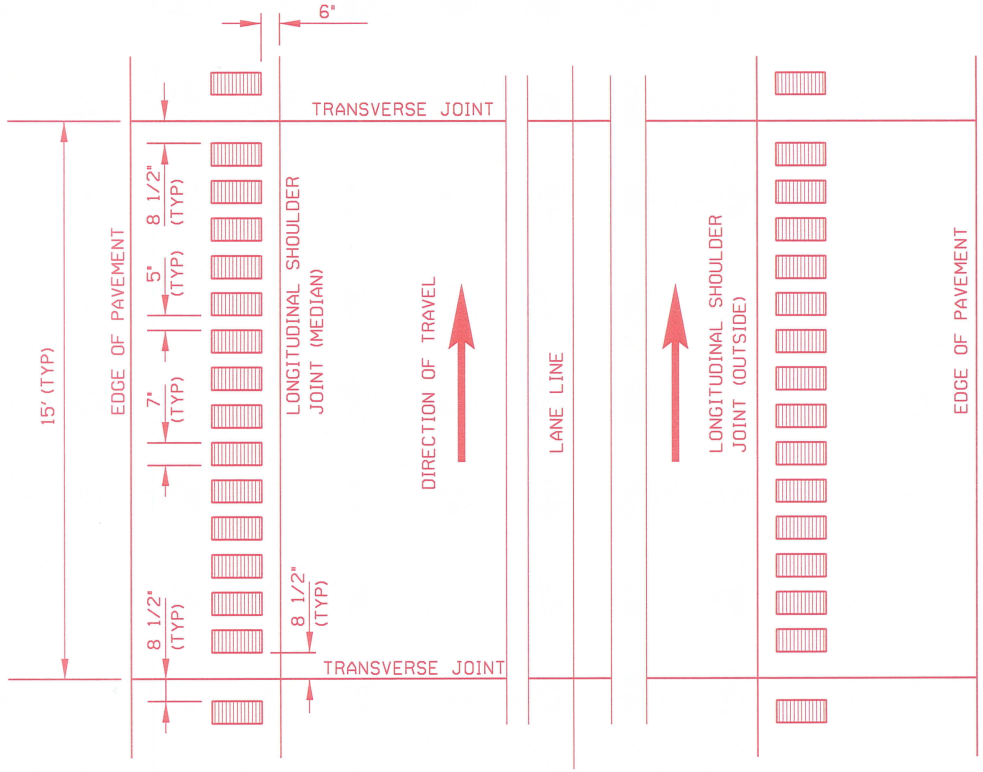

CONCRETE PAVEMENT RUMBLE STRIP DETAIL

~~STATE OF NEVADA~~
~~DEPARTMENT OF TRANSPORTATION~~

CONCRETE
RUMBLE STRIP

~~R-4.2.3~~	(609)	~~Signed Original On File~~
ADOPTED 10/85	REVISED 5/09	~~CHIEF HYDRAULICS ENGR.~~