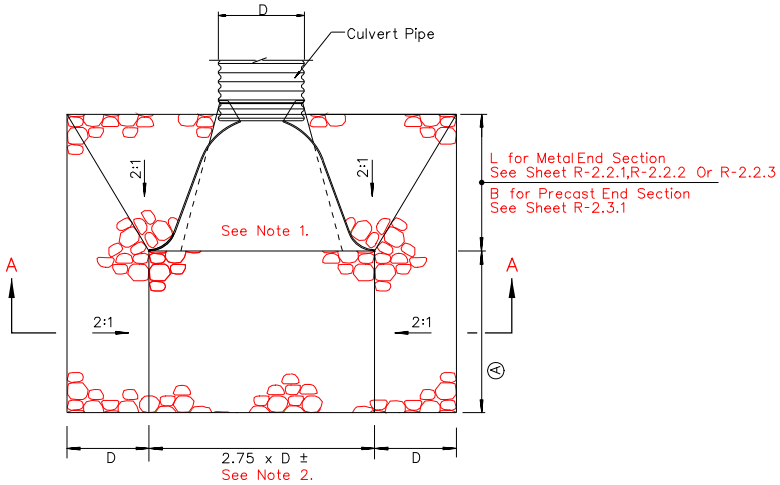

PLAN

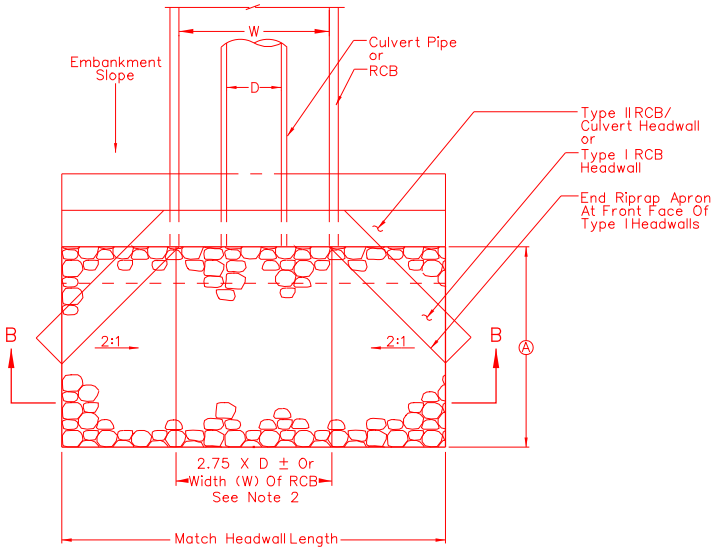

PLAN

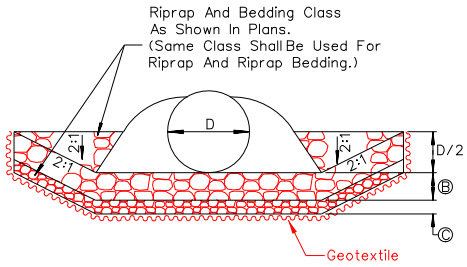

SECTION A-A

RIPRAP APRON
FOR END SECTIONS

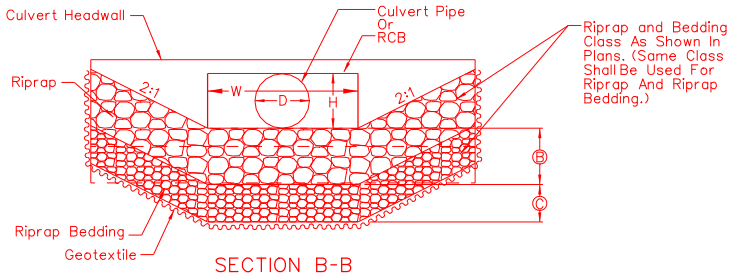

SECTION B-B

RIPRAP APRON
FOR HEADWALLS

CULVERT SIZE	Ⓐ
12" to 36" PIPE	*3D
42" to 84" PIPE	*4D
RCB	*4H

*OR AS SPECIFIED

RIPRAP AND BEDDING CLASS	Ⓑ in.	Ⓒ in.
150	12	8
300	24	8
400	36	10
550	48	12
700	60	12
900	72	24

GENERAL NOTES:

1. WHEN NO END SECTION IS USED, ADDITIONAL RIPRAP SHALL BE AS REQUIRED BY THE HYDRAULIC ENGINEER.
2. FOR MULTIPLE PIPE OR RCB INSTALLATIONS, THIS DIMENSION SHALL BE ADJUSTED ACCORDING TO THE PIPE SEPARATION INFORMATION ON SHEET R-2.1.1. OR IN THE HEADWALL DETAILS.
3. TRANSITION END OF RIPRAP APRON TO DOWN STREAM CHANNEL. APRON MAY BE SKEWED AND DIMENSIONS ADJUSTED TO MATCH AND LINE UP WITH DOWN STREAM CHANNEL.

NEVADA DEPARTMENT OF TRANSPORTATION

RIPRAP APRON FOR CULVERT HEADWALLS, TYPE 1 & 2 RCB HEADWALLS, AND END SECTIONS

Signed Original On File	R-3.1.5	(610)
CHIEF HYDRAULICS ENGINEER	ADOPTED 5/09	REVISION