BILL OF MATERIALS (RCP HDPE CMP)

PIPE SIZE (INCH)	SINGLE (ONE GRATE)					DOUBLE (TWO GRATES)					TRIPLE (THREE GRATES)				
	* CONCRETE (CY)		* REINF. (LB.)			* CONCRETE (CY)		* REINF. (LB.)			* CONCRETE (CY)		* REINF. (LB.)		
	BASE QUAN. (H MIN.)	ADD RATE (CY/FT)	BASE QUAN. (H MIN.)	ADD RATE (CY/FT)	STR STEEL (LB)	BASE QUAN. (H MIN.)	ADD RATE (CY/FT)	BASE QUAN. (H MIN.)	ADD RATE (CY/FT)	STR STEEL (LB)	BASE QUAN. (H MIN.)	ADD RATE (CY/FT)	BASE QUAN. (H MIN.)	ADD RATE (CY/FT)	STR STEEL (LB)
≤15	0.71	0.19	36	10	211	1.06	0.26	50	13	397	1.41	0.33	70	17	583
18	0.89	0.20	40	10	306	1.31	0.28	56	13	574	1.72	0.35	77	18	842
24	1.08	0.22	58	12	349	1.56	0.30	80	15	652	2.04	0.37	105	20	956
30	1.28	0.24	63	12	390	1.83	0.31	86	16	729	2.38	0.39	113	20	1068
36	1.50	0.26	67	13	524	2.11	0.33	92	16	980	2.72	0.41	120	21	1435
42	1.71	0.28	90	15	575	2.39	0.35	120	18	1073	3.07	0.43	154	22	1571
48	1.94	0.30	95	15	707	2.68	0.37	127	18	1329	3.42	0.44	163	23	1951

*The Concrete And Reinforcing Quantities Are Based On The H Min. Shown. Increase The Concrete And Reinforcing Base Quantity By The Corresponding Add Rate (Per Foot Of Increased H) If The H Specified Is Larger Than H Min.

TABLE OF DIMENSIONS (RCP HDPE CMP)

PIPE SIZE (INCH)	A	H Min. (FT)	MAIN BARS (INCH)	FRAME ANGLES (INCH)	FRAME BARS (INCH)	L (FT)		
						SINGLE GRATE	DOUBLE GRATE	TRIPLE GRATE
≤ 15	2'	2.50	3½ X ⅜	4 X 3 X ⅜	4 X ⅜	2	4	6
18	2' 6"	3.00	4½ X ⅜	5 X 3 X ⅜	5 X ⅜	2	4	6
24	3'	3.50	4½ X ⅜	5 X 3 X ⅜	5 X ⅜	2	4	6
30	4'	4.00	4½ X ⅜	5 X 3 X ⅜	5 X ⅜	2	4	6
36	4'	4.50	5½ X ⅜	6 X 3½ X ⅜	6 X ⅜	2	4	6
42	5'	5.00	5½ X ⅜	6 X 3½ X ⅜	6 X ⅜	2	4	6
48	5'	5.50	5½ X 7/16	6 X 3½ X ⅜	6 X ⅜	2	4	6

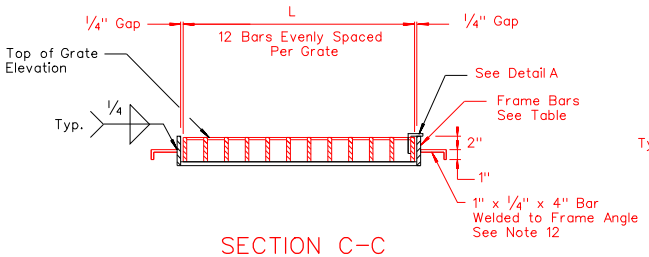

SECTION C-C

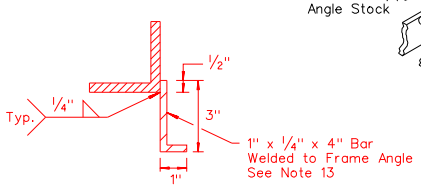

TAB DETAIL

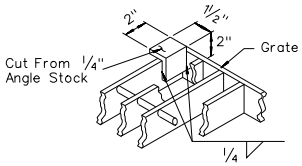

DETAIL A

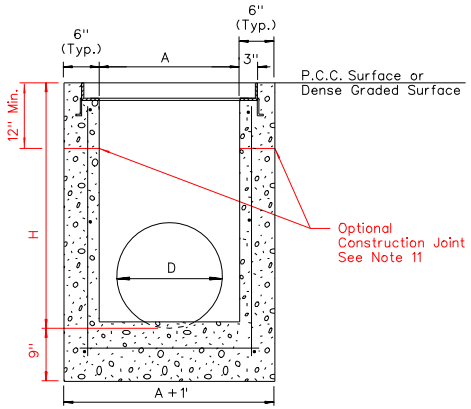

SECTION A-A

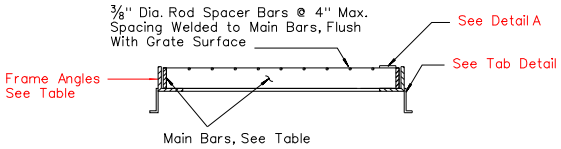

SECTION B-B

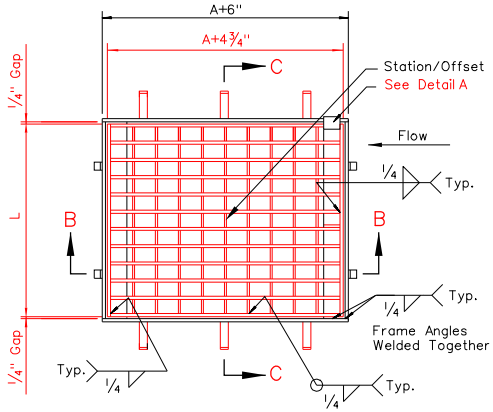

GRATE AND FRAME

NOTES:

1. ALL CONCRETE SHALL BE CLASS A OR AA.
2. REINFORCING STEEL SHALL BE NO.4 BARS WITH MAXIMUM SPACING AT 18" CENTERS, WIRED TIGHTLY AT ALL INTERSECTIONS AND EMBEDDED 2" CLEAR OF ALL CONCRETE SURFACES.
3. EXPOSED EDGES OF CONCRETE SHALL BE CHAMFERED 1".
4. DIMENSIONS MAY BE VARIED TO FIT LOCAL CONDITIONS IF ORDERED BY THE ENGINEER.
5. COMMERCIAL PREFABRICATED GRATINGS APPROVED BY THE BRIDGE DIVISION MAY BE USED IN LIEU OF THE FIELD-WELDED GRATING SHOWN ABOVE.
6. EXTREME LOW COVER SITUATIONS TO BE REVIEWED BY HYDRAULICS ENGINEER.
7. SLOPE CATCH BASIN FLOORS 10:1 FROM ALL DIRECTIONS TOWARD OUTLET PIPE. IF BASIN IS USED AS A JUNCTION, SHAPE FLOW LINE(S) TO OUTLET PIPE AND PROVIDE A 10:1 SLPOE TO FLOW LINE(S).
8. SEE SHEET R-2.9.1 FOR DETAILS IF CONNECTING HDPE PIPE.
9. A SINGLE TYPE 2 DROP INLET SHALL BE CONSTRUCTED UNLESS A DOUBLE OR TRIPLE IS SPECIFIED.
10. SINGLE GRATE CONFIGURATION SHOWN FOR CLARITY. OUTSIDE DIMENSIONS OF EACH GRATE SHALL MEASURE 2' BY A+4¾".
11. RUN REBAR CONTINUOUS THRU CONSTRUCTION JOINT. JOINT MUST BE A MINIMUM OF 3" FROM HORIZONTAL BARS.
12. WELD ONE TAB ON ℄ OF GRATE AND REMAINING TWO TABS 6" FROM EDGE OF FRAME. SIX TABS PER INLET, THREE TABS ON EACH SIDE
13. WELD TABS 6" FROM EDGE OF FRAME. FOUR TABS PER GRATE, TWO ON EACH SIDE.

DESIGN NOTES:

D1. ADDITIONAL PIPE PENETRATIONS MAY BE PLACED IN ANY WALL.

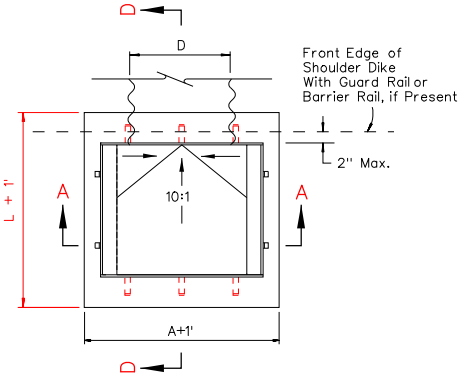

PLAN

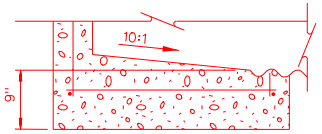

SECTION D-D

NEVADA DEPARTMENT OF TRANSPORTATION

TYPE 2 DROP INLET

Signed Original On File	R-4.2.1	(609)
CHIEF HYDRAULICS ENGINEER	ADOPTED 11/70	REVISION 5/09